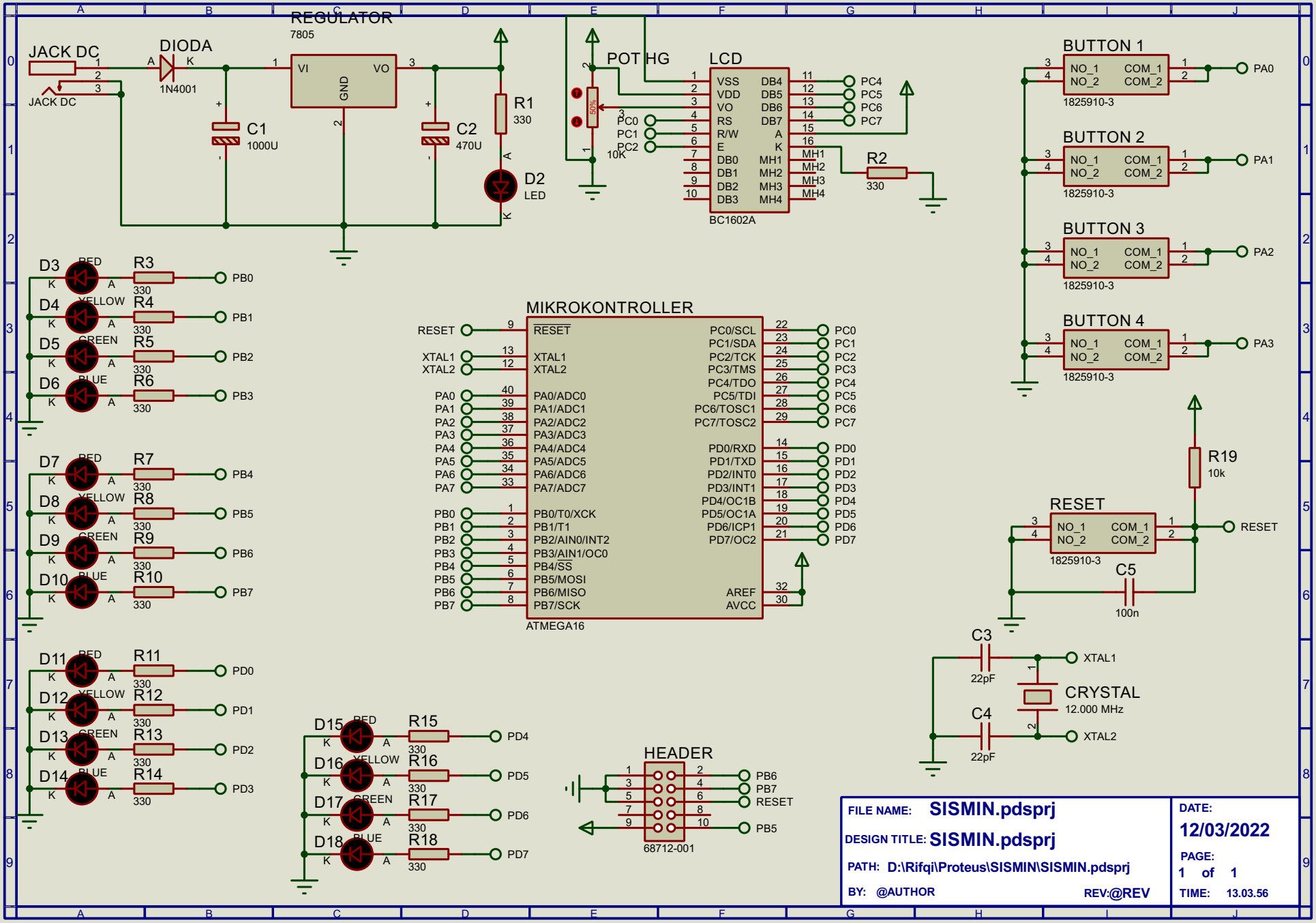
REGULATOR
7805
JACK DC
JACK DC
DIODA
1N4001
C1
1000U
C2
470U
R1
330
D2
LED
POT HG
50%
10K
LCD
BC1602A
R2
330
BUTTON 1
BUTTON 2
BUTTON 3
BUTTON 4
1825910-3
PA0
PA1
PA2
PA3
D3 RED R3 330 PB0
D4 YELLOW R4 330 PB1
D5 GREEN R5 330 PB2
D6 BLUE R6 330 PB3
D7 RED R7 330 PB4
D8 YELLOW R8 330 PB5
D9 GREEN R9 330 PB6
D10 BLUE R10 330 PB7
D11 RED R11 330 PD0
D12 YELLOW R12 330 PD1
D13 GREEN R13 330 PD2
D14 BLUE R14 330 PD3
D15 RED R15 330 PD4
D16 YELLOW R16 330 PD5
D17 GREEN R17 330 PD6
D18 BLUE R18 330 PD7
MIKROKONTROLLER
ATMEGA16
RESET
XTAL1
XTAL2
HEADER
68712-001
R19
10k
RESET
C5
100n
C3
22pF
C4
22pF
CRYSTAL
12.000 MHz
FILE NAME: SISMIN.pdsprj
DESIGN TITLE: SISMIN.pdsprj
PATH: D:\Rifqi\Proteus\SISMIN\SISMIN.pdsprj
BY: @AUTHOR
REV:@REV
DATE: 12/03/2022
PAGE: 1 of 1
TIME: 13.03.56