US006544098B1

(12) **United States Patent**
Hampton et al.

(10) **Patent No.: US 6,544,098 B1**
(45) **Date of Patent: *Apr. 8, 2003**

(54) **INTERACTIVE TOY**

(75) Inventors: **David Mark Hampton**, Nevada City, CA (US); **Caleb Chung**, Boise, ID (US)

(73) Assignee: **Hasbro, Inc.**, Pawtucket, RI (US)

(*) Notice: Subject to any disclaimer, the term of this patent is extended or adjusted under 35 U.S.C. 154(b) by 0 days.

This patent is subject to a terminal disclaimer.

(21) Appl. No.: **09/425,773**

(22) Filed: **Oct. 22, 1999**

Related U.S. Application Data

(62) Division of application No. 09/211,101, filed on Dec. 15, 1998, now Pat. No. 6,149,490.

(51) **Int. Cl.**[7] **A63H 3/28**
(52) **U.S. Cl.** **446/301**; 446/353; 446/298
(58) **Field of Search** 446/301, 298, 446/299, 300, 303, 330, 337, 352, 353, 354, 175

(56) **References Cited**

U.S. PATENT DOCUMENTS

3,638,351	A	2/1972	Kosicki et al.
3,755,960	A	9/1973	Tepper et al.
3,912,694	A	10/1975	Chiappe et al.
4,139,968	A	2/1979	Milner
4,221,927	A	9/1980	Dankman et al.
4,245,430	A	1/1981	Hoyt
4,249,338	A	2/1981	Wexler
4,267,606	A	5/1981	Stelter et al.
4,318,245	A	3/1982	Stowell et al.
4,375,106	A	2/1983	Voll
4,439,161	A	3/1984	Wiggins et al.
4,451,911	A	5/1984	Klose et al.
4,516,950	A	5/1985	Berman et al.
4,591,248	A	5/1986	Freeman
4,654,659	A	3/1987	Kubo
4,659,919	A	4/1987	Price

(List continued on next page.)

FOREIGN PATENT DOCUMENTS

DE	33 45 978 A1	6/1985
GB	2 256 598 A	12/1992
WO	WO 9603190 A1	2/1996
WO	WO 97/41936	11/1997

Primary Examiner—Derris H. Banks
Assistant Examiner—Ali Abdelwahed
(74) *Attorney, Agent, or Firm*—Michael, Best & Friedrich, LLC

(57) **ABSTRACT**

A very compact interactive toy is provided that provides highly life-like and intelligent seeming interaction with the user thereof. The toy can take the form of a small animal-like creature having a variety of moving body parts that have very precisely controlled and coordinated movements thereof so as to provide the toy with life-like mannerisms. The toy utilizes sensors for detecting sensory inputs which dictate the movements of the body parts in response to the sensed inputs. The sensors also allow several of the toys to interact with each other. The body parts are driven for movement by a single motor which is relatively small in terms of its power requirements given the large number of different movements that it powers. In addition, the motor is reversible so that the body parts can be moved in a non-cyclic life-like manner. For space conservation, a cam operating mechanism is provided that is very compact with the cam mechanisms for the parts all operated off of a single small control shaft of the cam operating mechanism, e.g. approximately one inch in length, driven for rotation by the single, low power motor.

7 Claims, 42 Drawing Sheets

Microfiche Appendix Included
(4 Microfiche, 297 Pages)

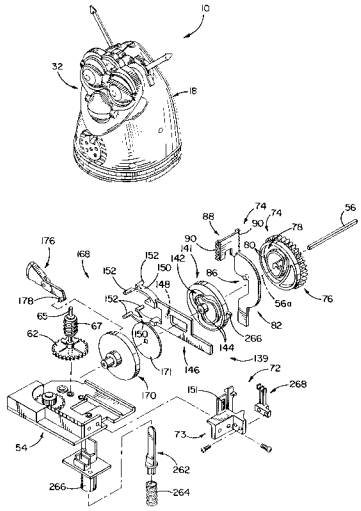

U.S. PATENT DOCUMENTS

4,673,371 A 6/1987 Furukawa
4,675,519 A 6/1987 Price
4,696,653 A 9/1987 McKeefery
4,717,364 A 1/1988 Furukawa
4,740,186 A 4/1988 Sirota
4,754,133 A 6/1988 Bleich
4,799,171 A 1/1989 Cummings
4,802,879 A 2/1989 Rissman et al.
4,809,335 A 2/1989 Rumsey
4,840,602 A 6/1989 Rose
4,850,930 A 7/1989 Sato et al.
4,857,030 A 8/1989 Rose
4,864,607 A 9/1989 Mitamura et al.
4,900,289 A 2/1990 May et al.
4,923,428 A 5/1990 Curran
4,949,327 A 8/1990 Forsse et al.
5,011,449 A 4/1991 Handy et al.
5,267,886 A 12/1993 Wood et al.
5,279,514 A 1/1994 Lacombe et al.
5,281,180 A 1/1994 Lam et al.
5,288,069 A 2/1994 Matsumoto
5,324,225 A 6/1994 Satoh et al.
5,375,839 A 12/1994 Pagani
5,376,038 A 12/1994 Arad et al.
5,468,172 A 11/1995 Basile
5,471,192 A 11/1995 Dash
5,636,994 A 6/1997 Tong
5,700,178 A 12/1997 Cimerman et al.
5,816,885 A 10/1998 Goldman et al.
6,110,000 A * 8/2000 Ting 446/302
6,149,490 A * 11/2000 Hampton et al.
6,309,275 B1 * 10/2001 Fong et al. 446/297

* cited by examiner

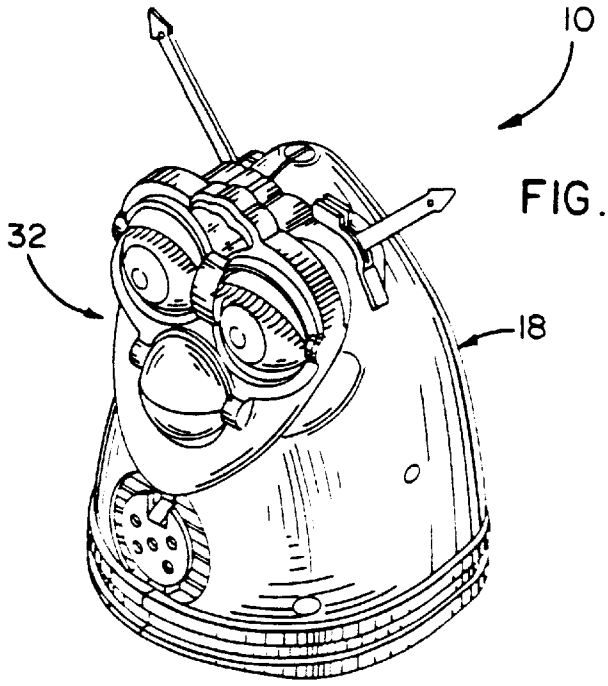

FIG. 1

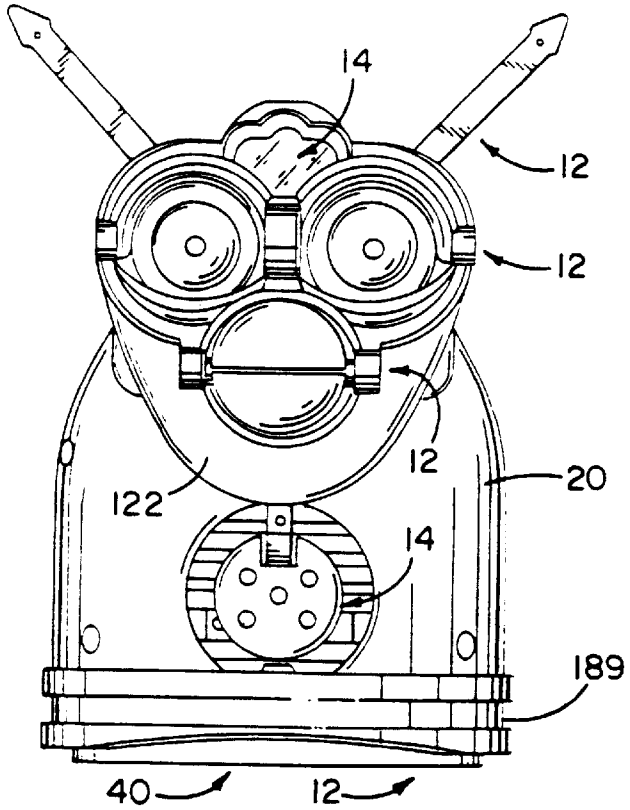

FIG. 2

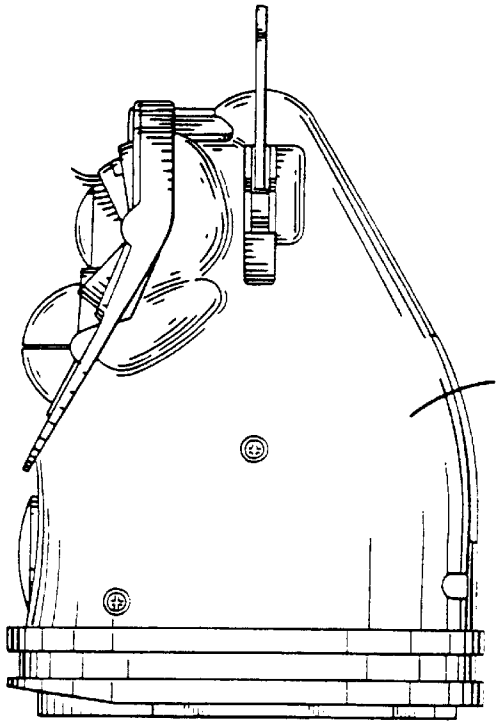

FIG. 3

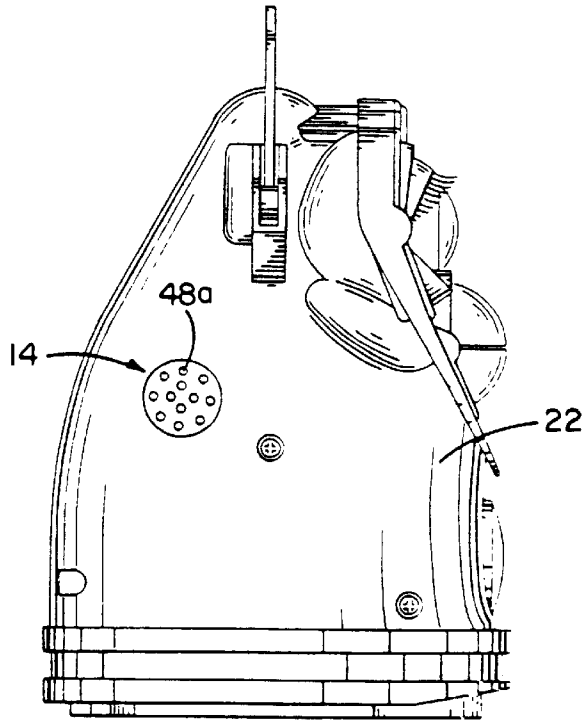

FIG. 4

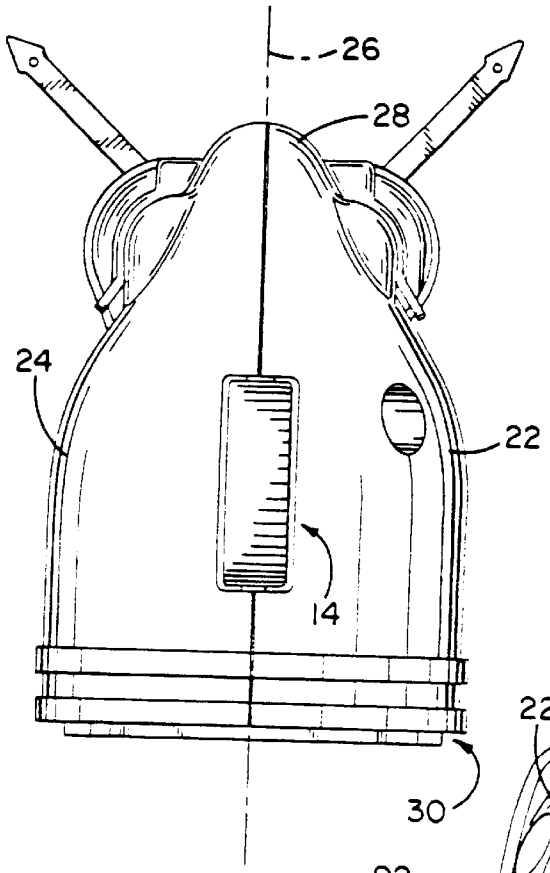

FIG. 5

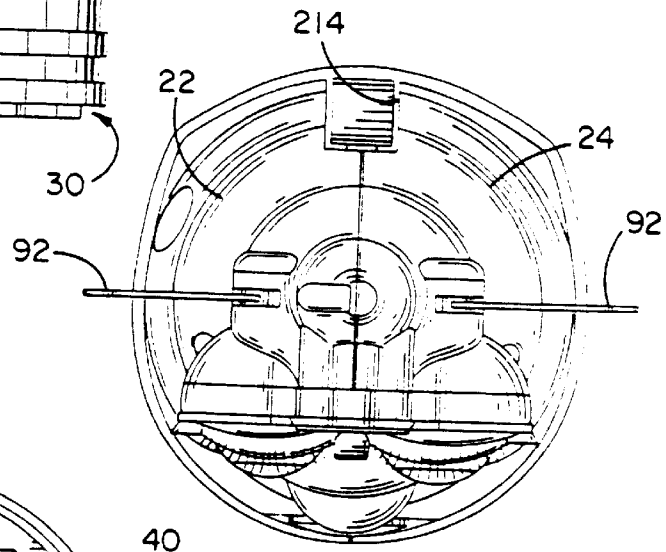

FIG. 6

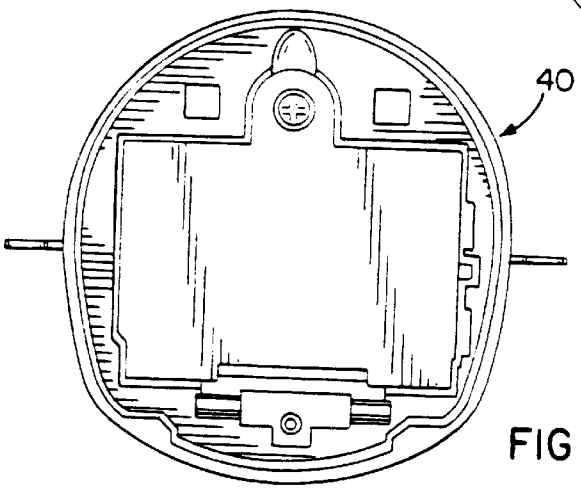

FIG. 7

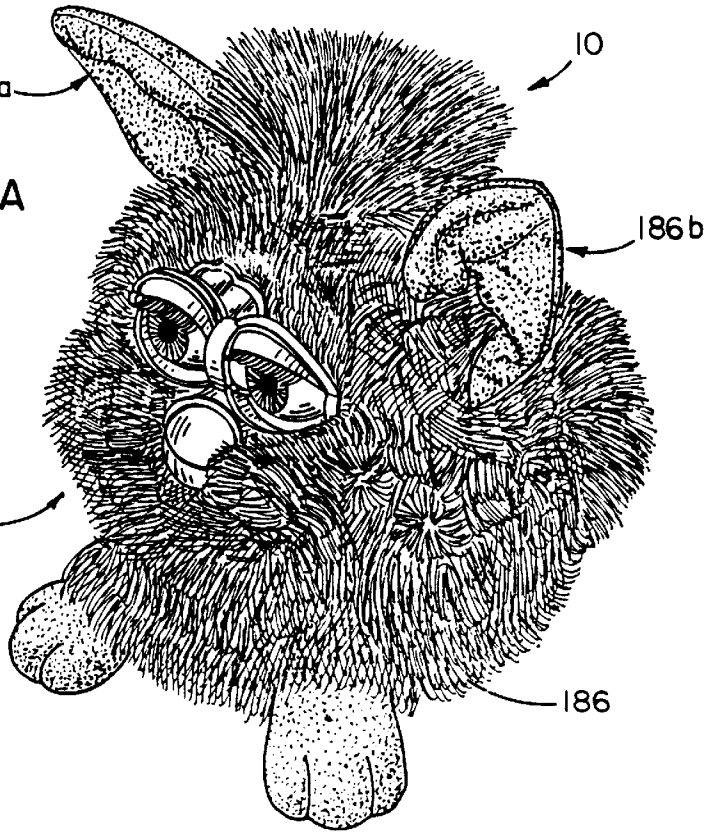
10
186a
186b
18
186

FIG. 8A

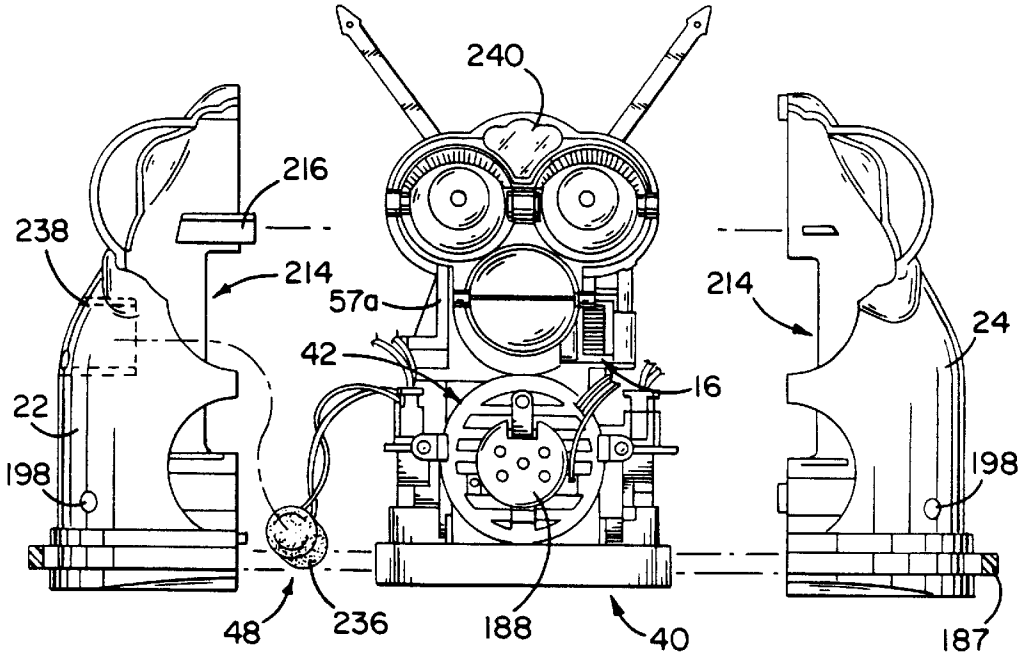
240
216
238
214
57a
214
24
42
16
22
198
198
48
236
188
40
187

FIG. 11

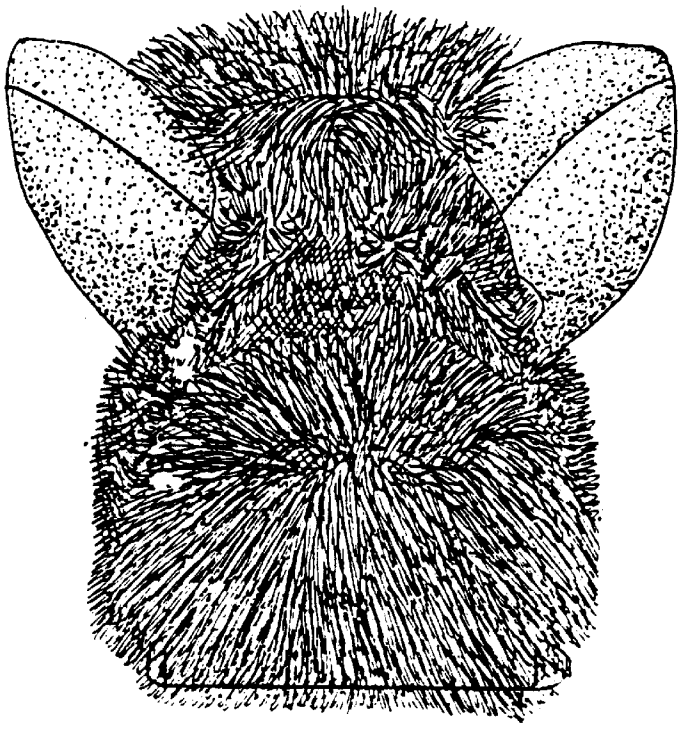

FIG. 8B

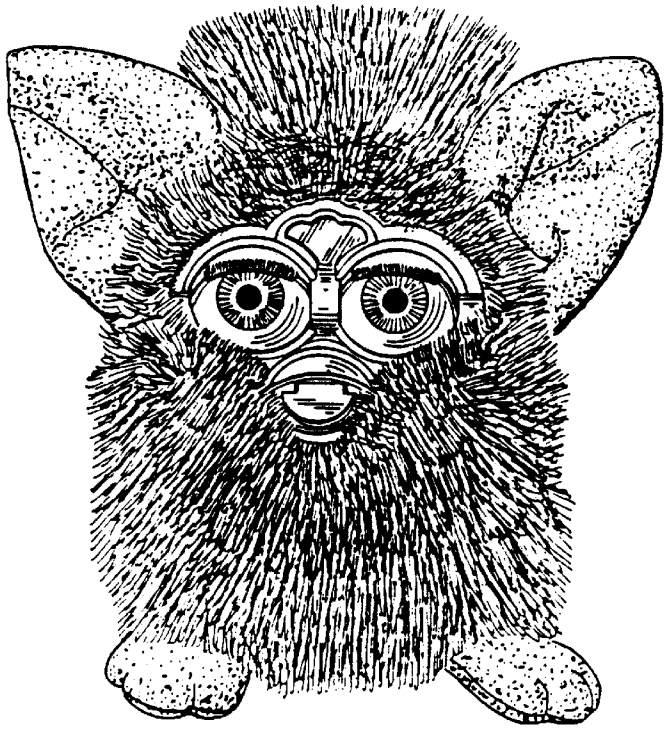

FIG. 8C

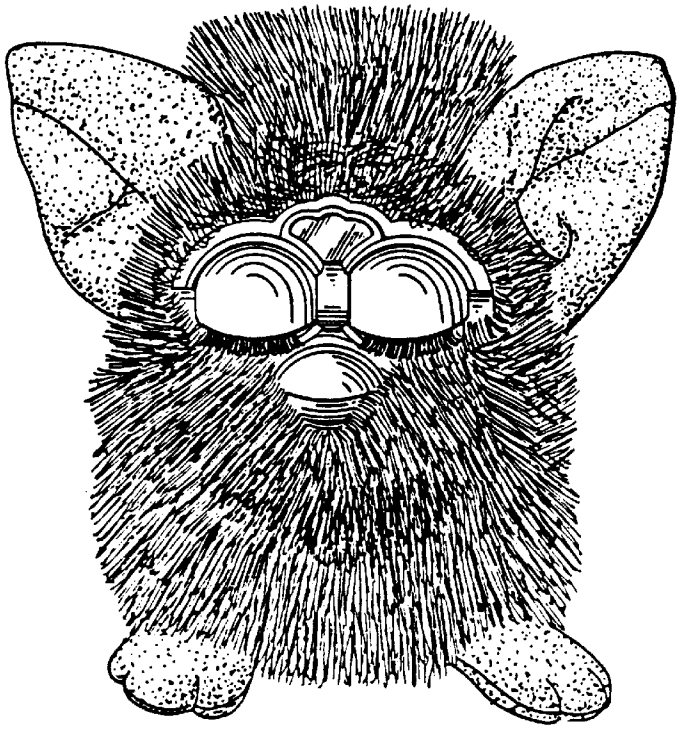

FIG. 8D

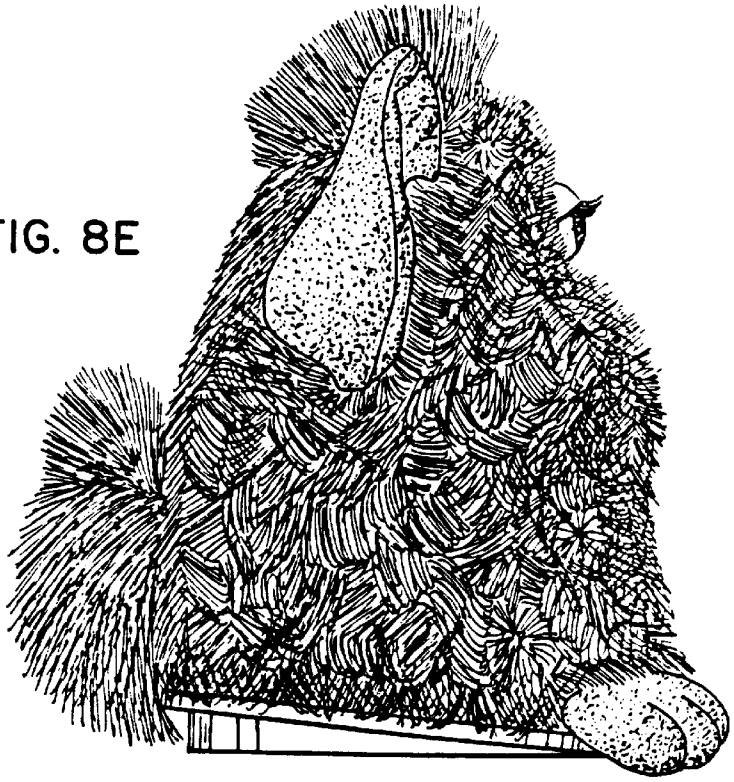

FIG. 8E

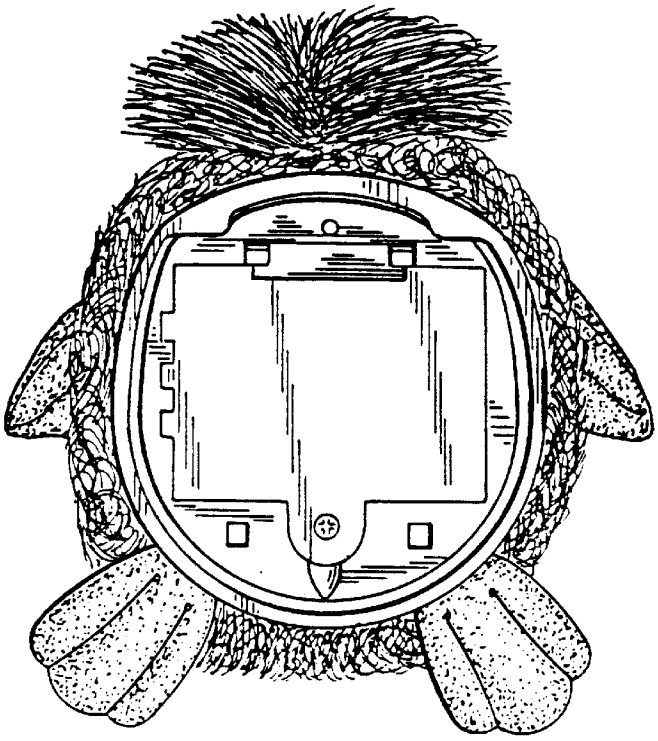

FIG. 8F

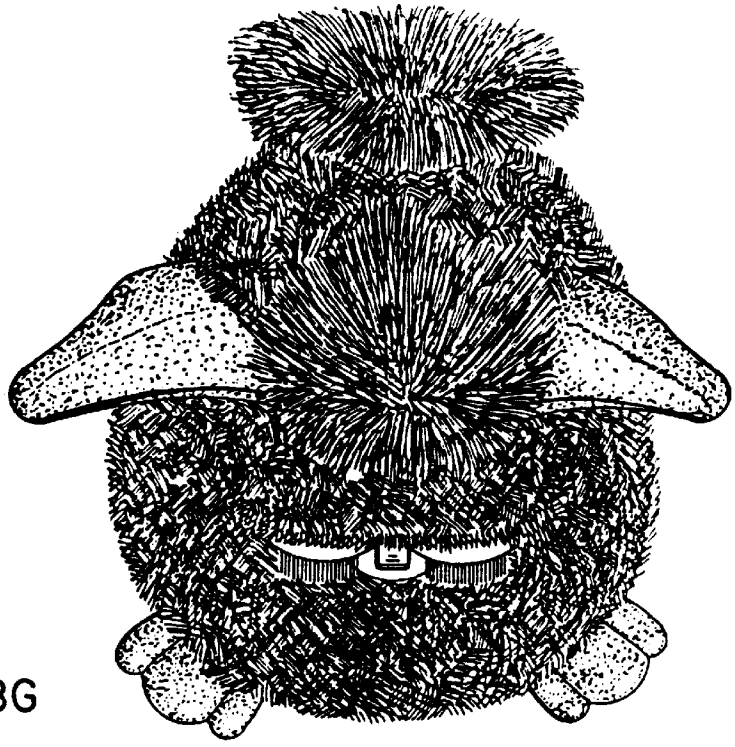

FIG. 8G

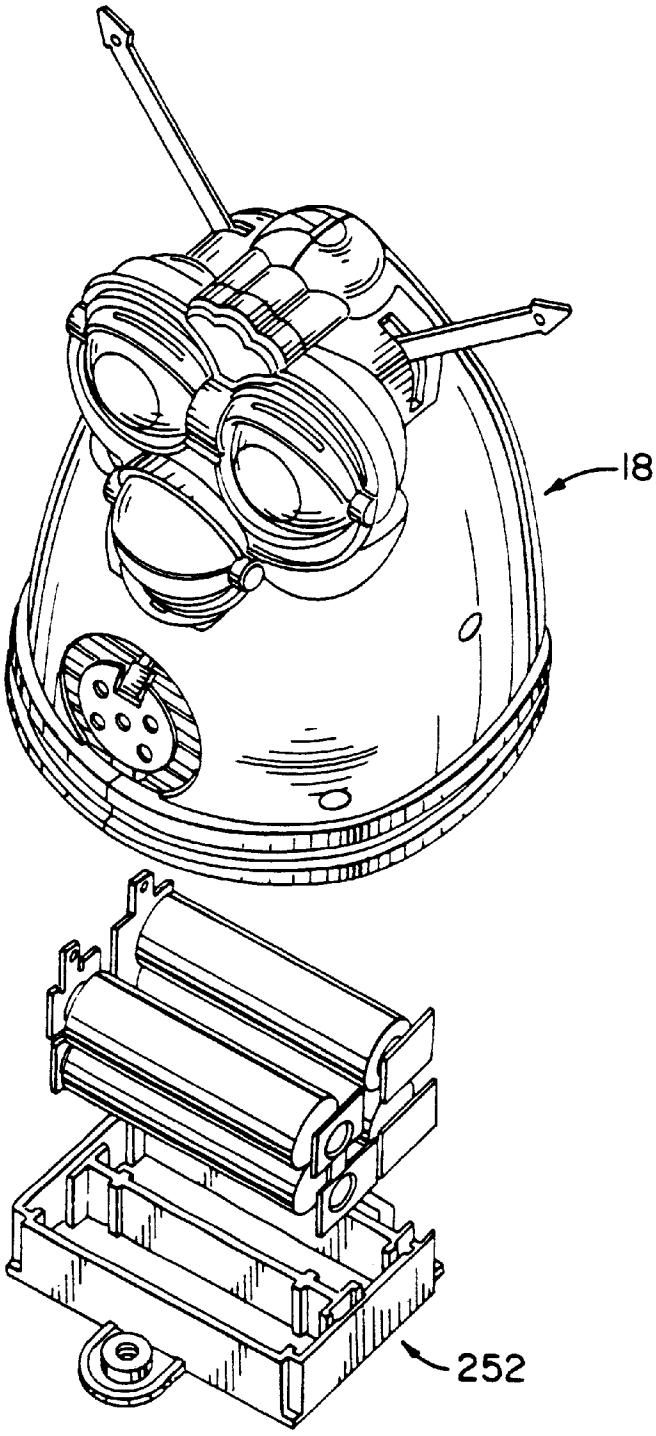

FIG. 9

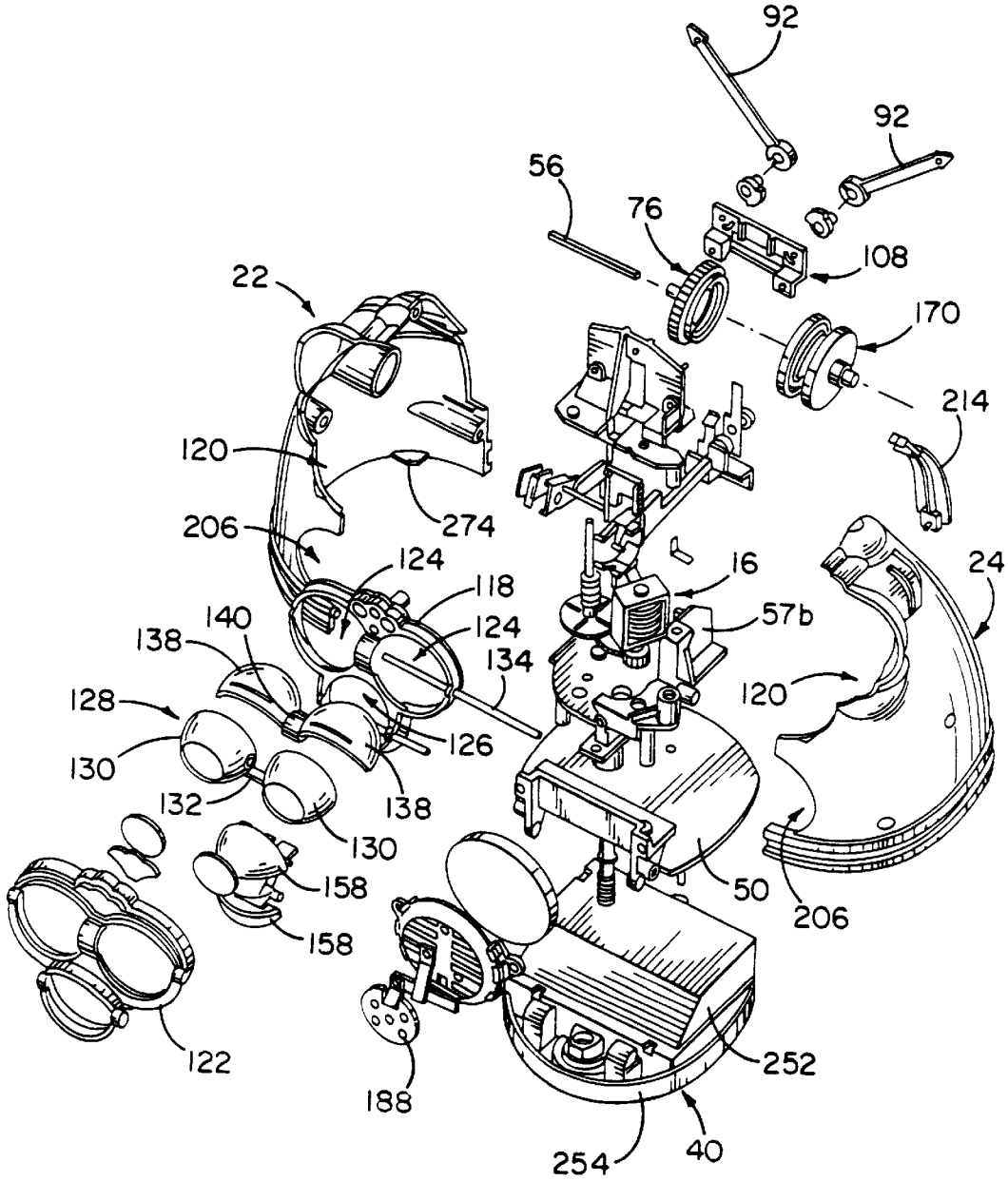
92
92
56
76
108
22
170
214
120
274
206
124
118
16
24
140
124
57b
138
134
120
128
126
130
132
138
130
158
50
206
158
122
252
188
254
40

FIG. 10

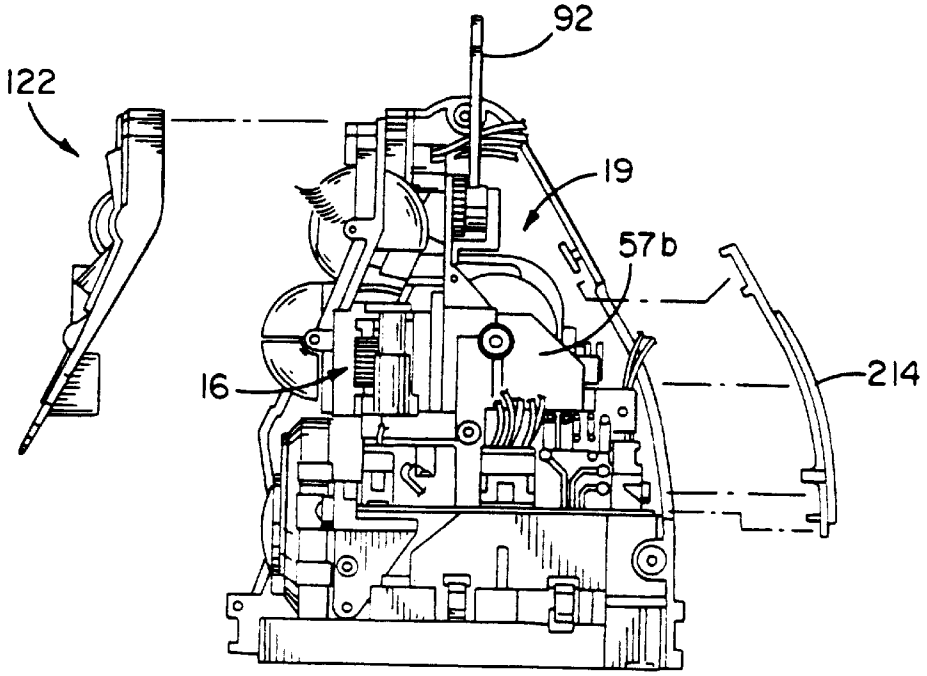

FIG. 12

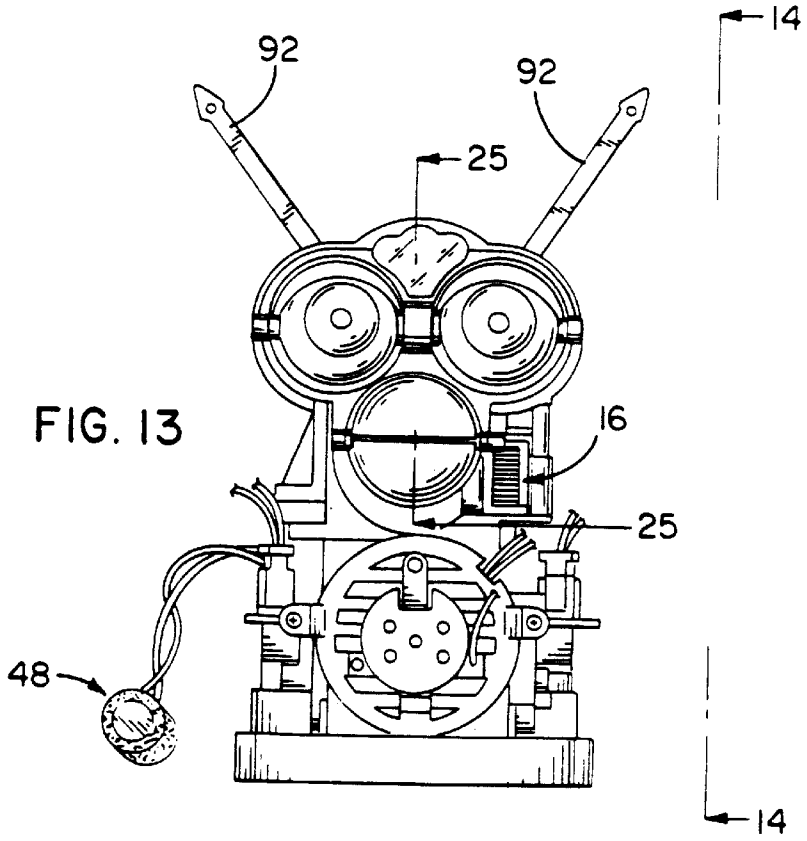

FIG. 13

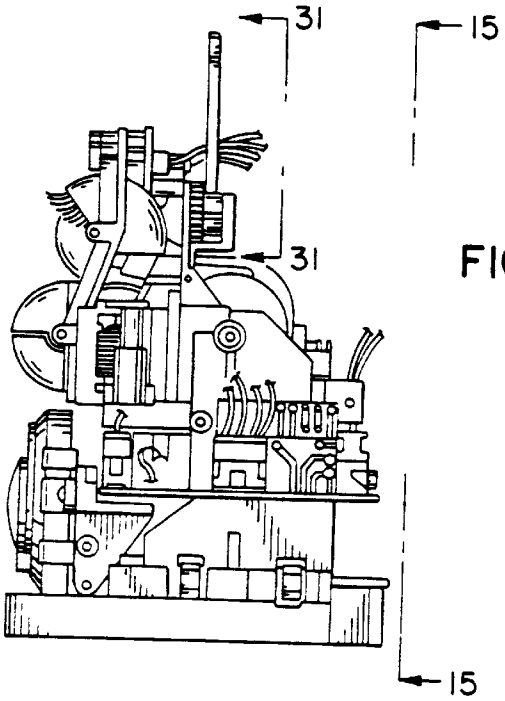

FIG. 14

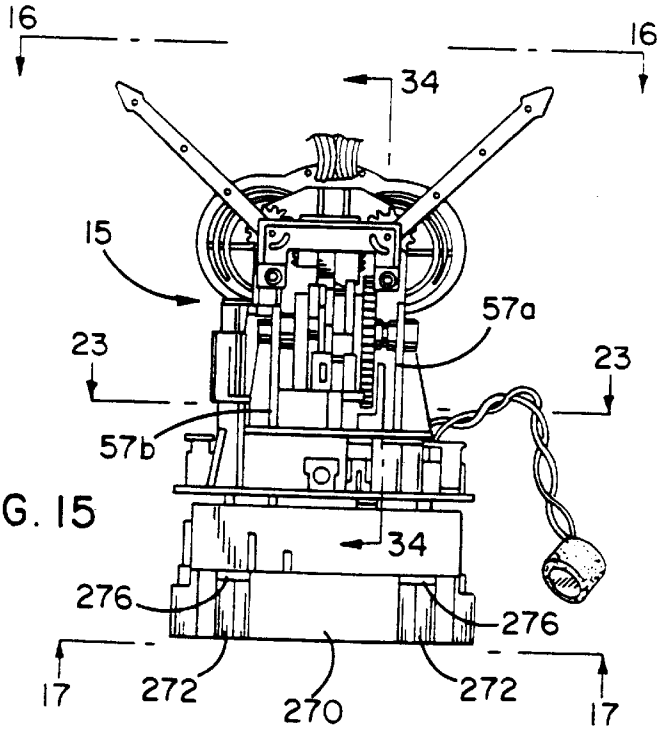

FIG. 15

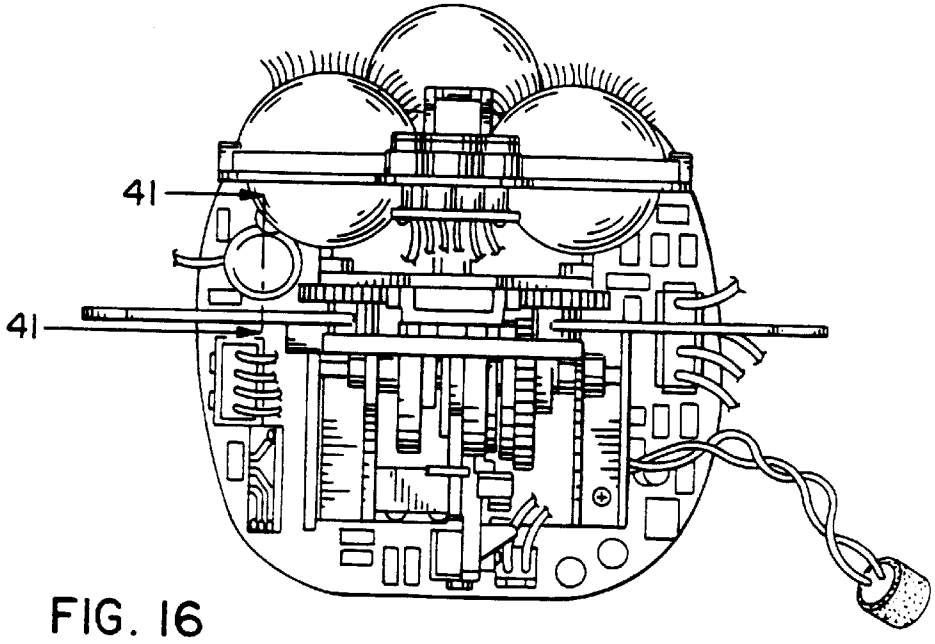

FIG. 16

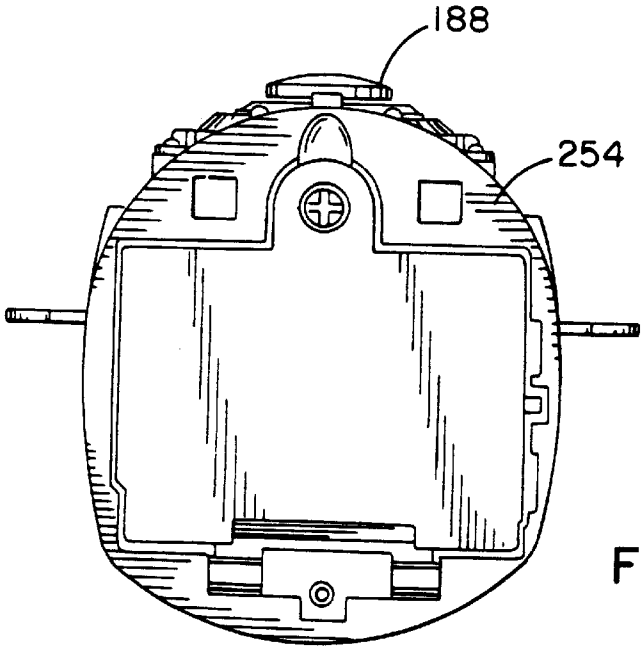

FIG. 17

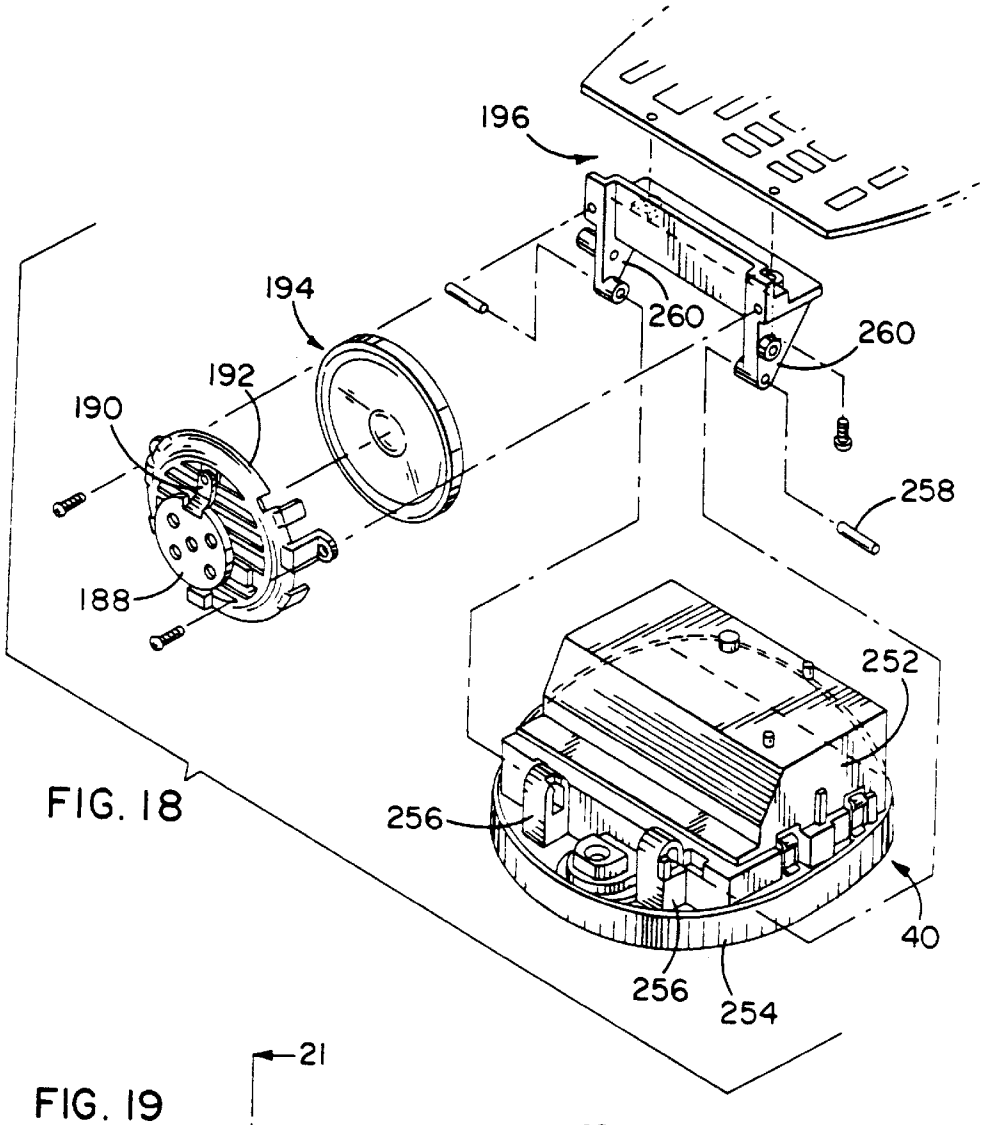

FIG. 18

FIG. 19

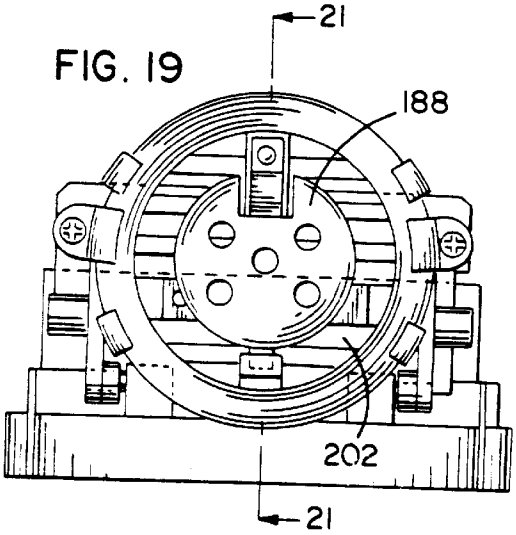

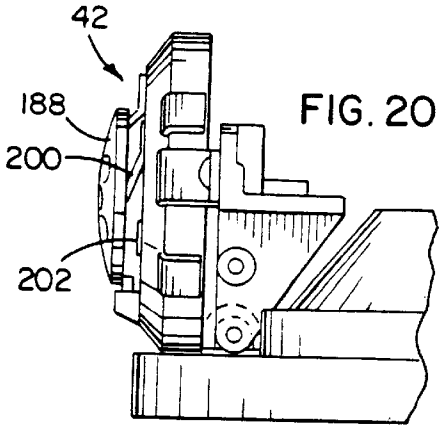

FIG. 20

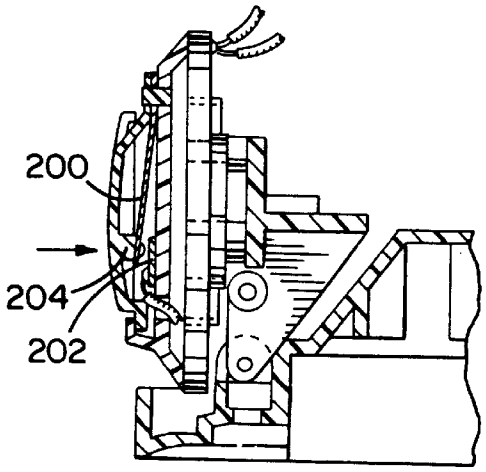

FIG. 21

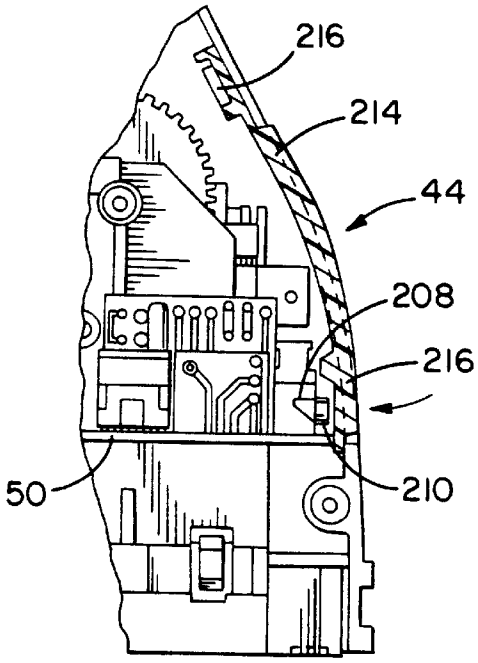

FIG. 22

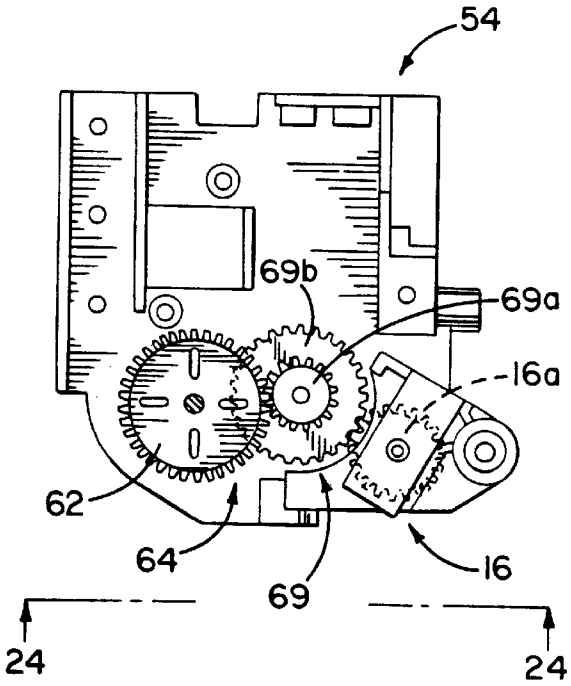

FIG. 23

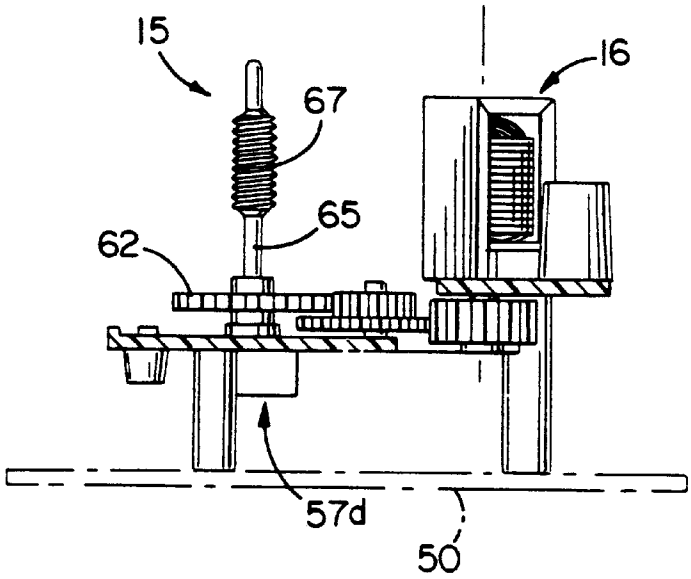
15
16
67
65
62
57d
50

FIG. 24

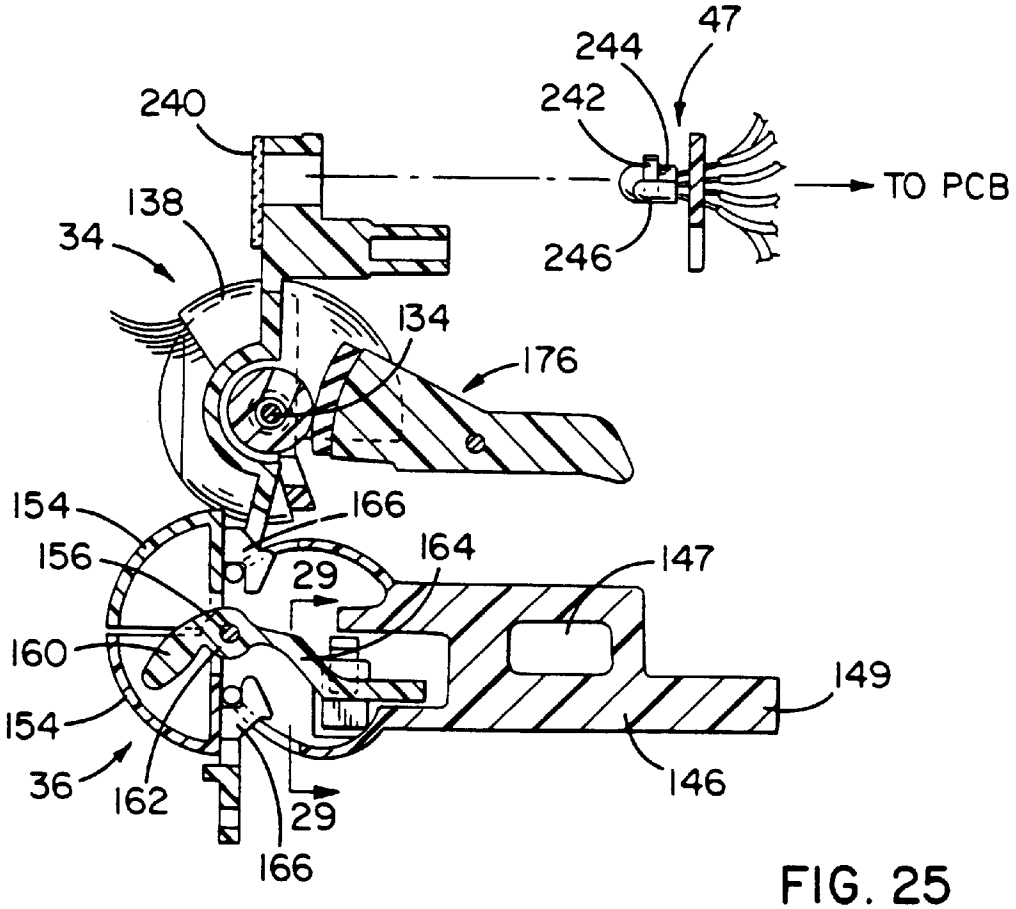
47
244
242
240
TO PCB
246
138
34
134
176
154
166
156
164
147
29
160
149
154
36
162
146
29
166

FIG. 25

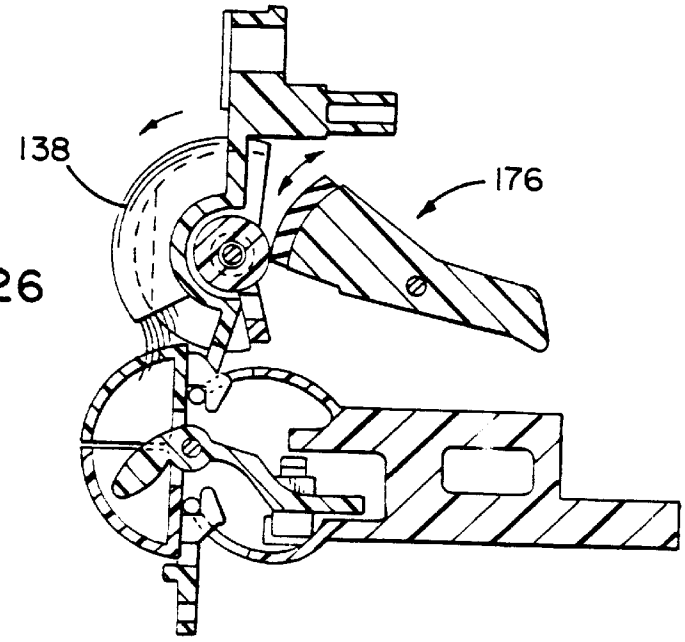

FIG. 26

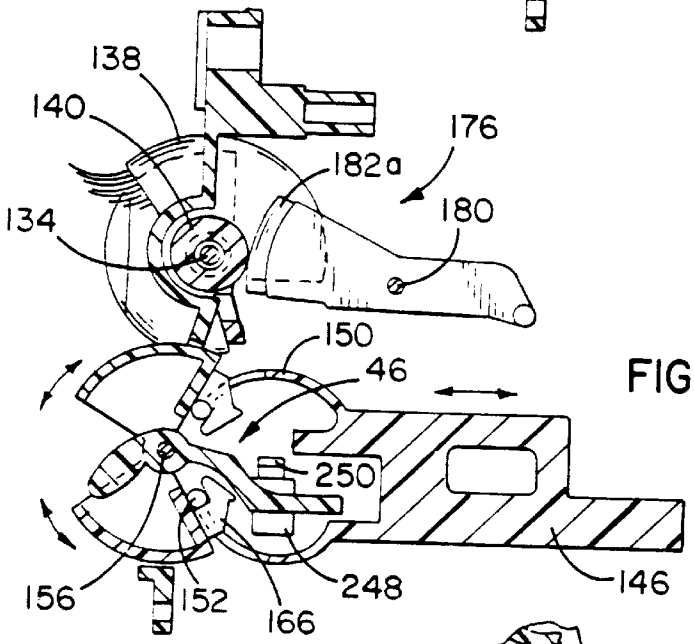

FIG. 27

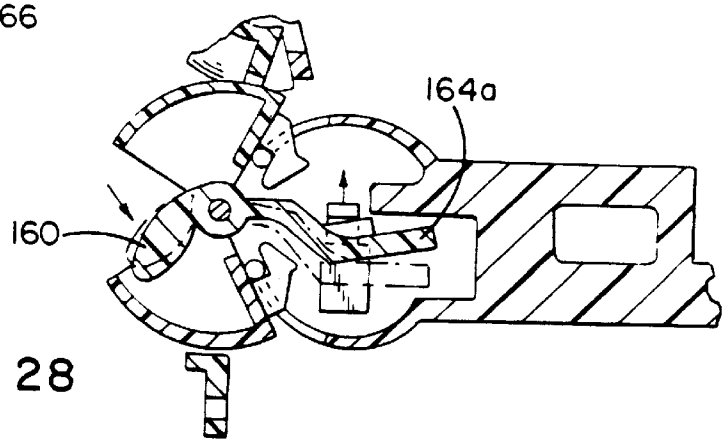

FIG. 28

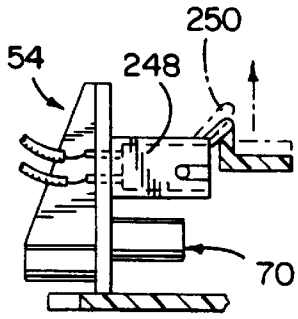
250
54
248
70

FIG. 29

FIG. 30

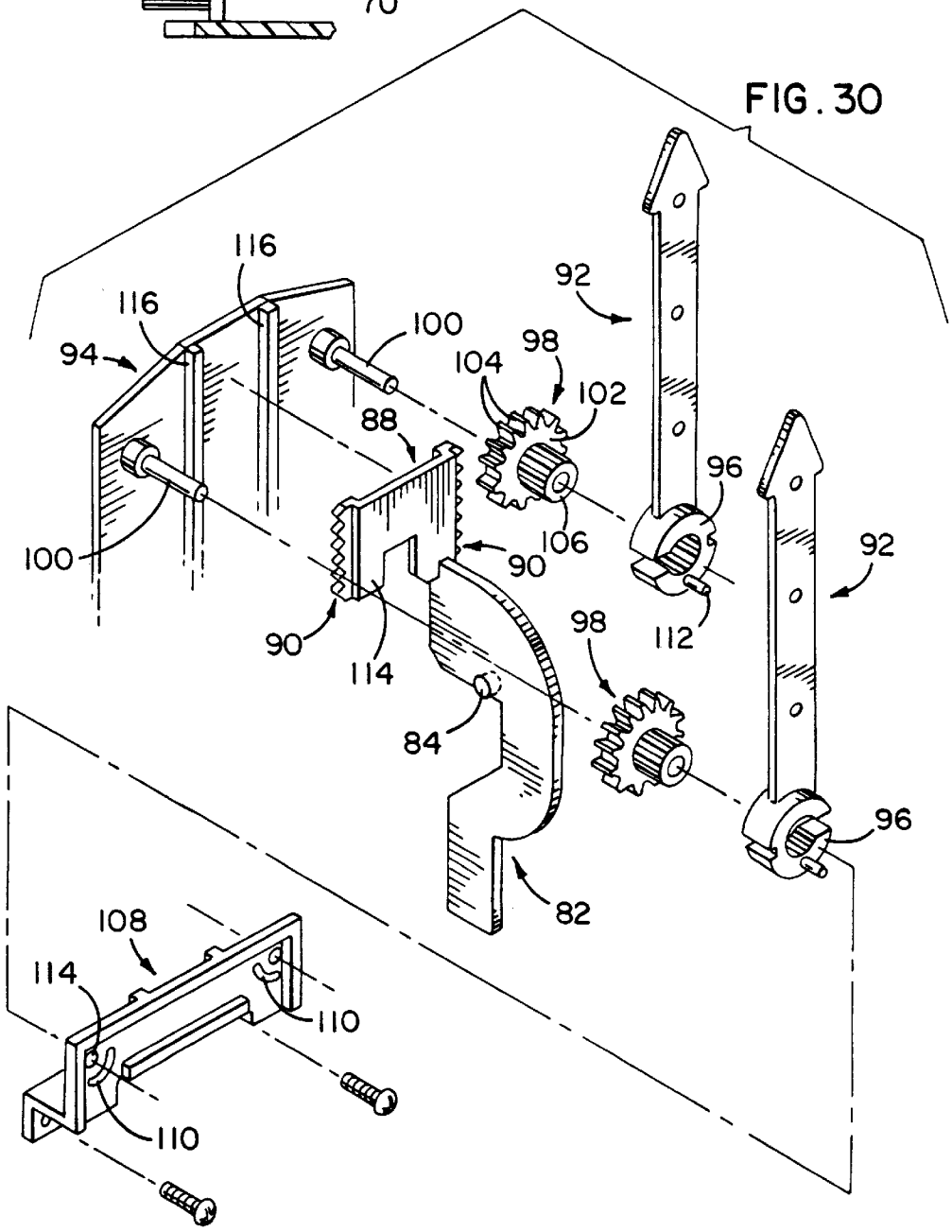
116
116
94
100
100
104
98
102
88
92
96
106
90
90
114
112
98
92
84
96
82
108
114
110
110

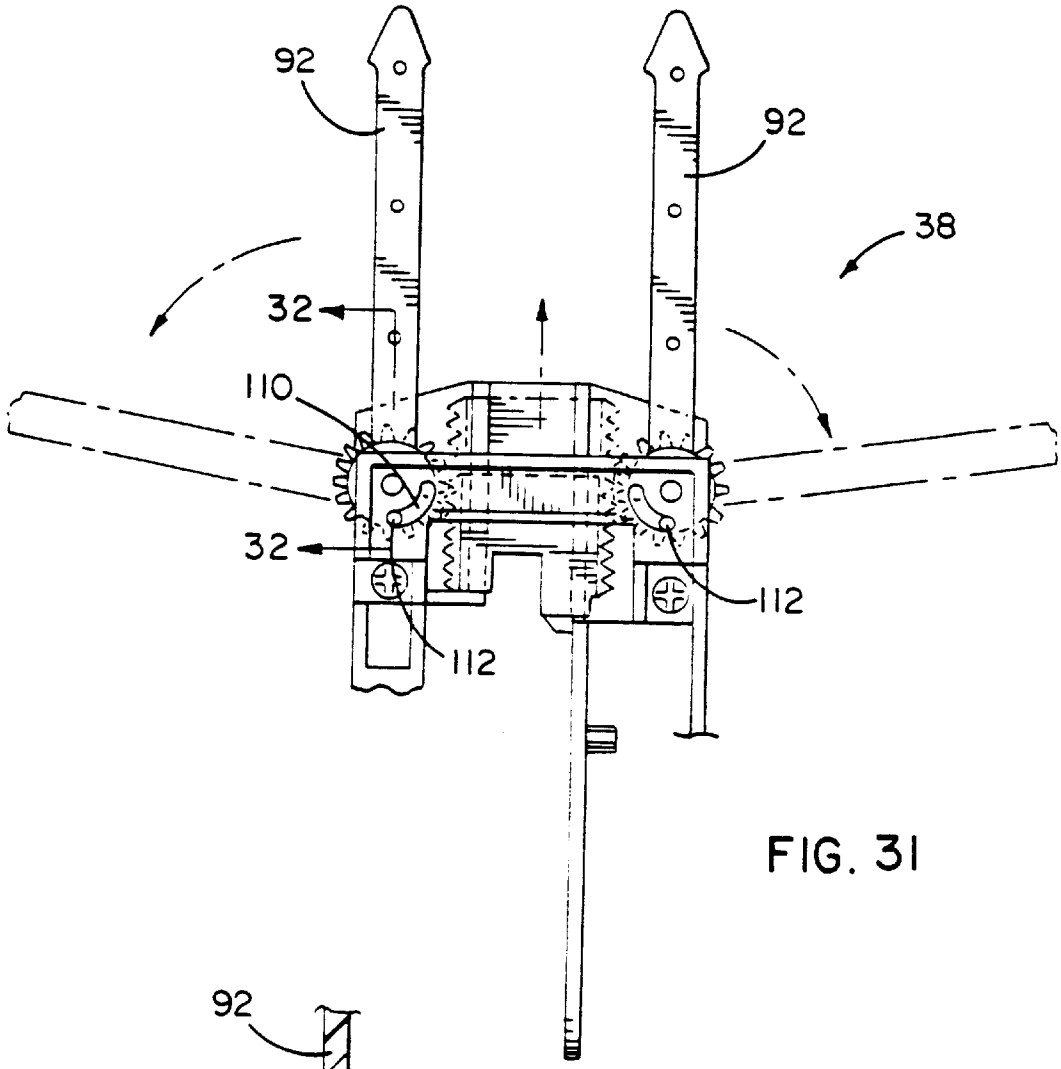

FIG. 31

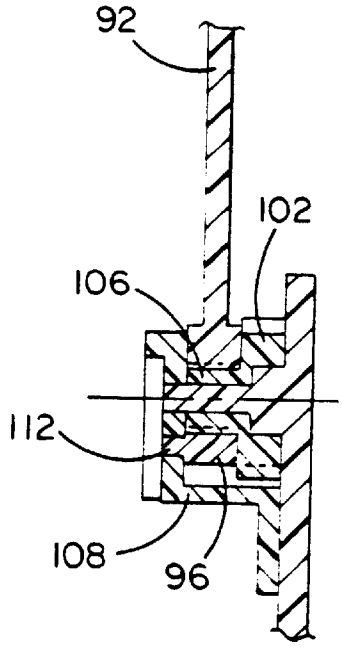

FIG. 32

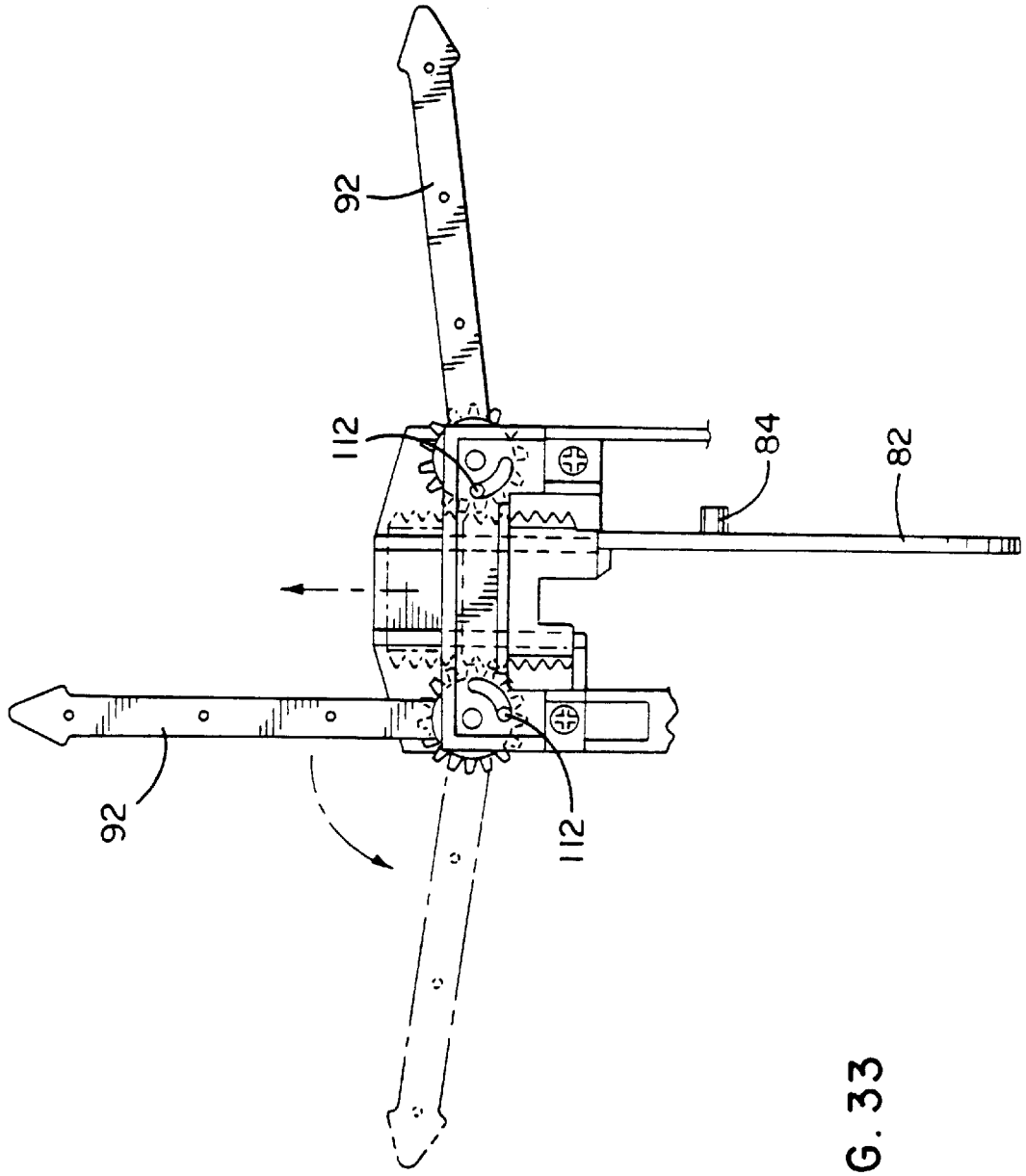

FIG. 33

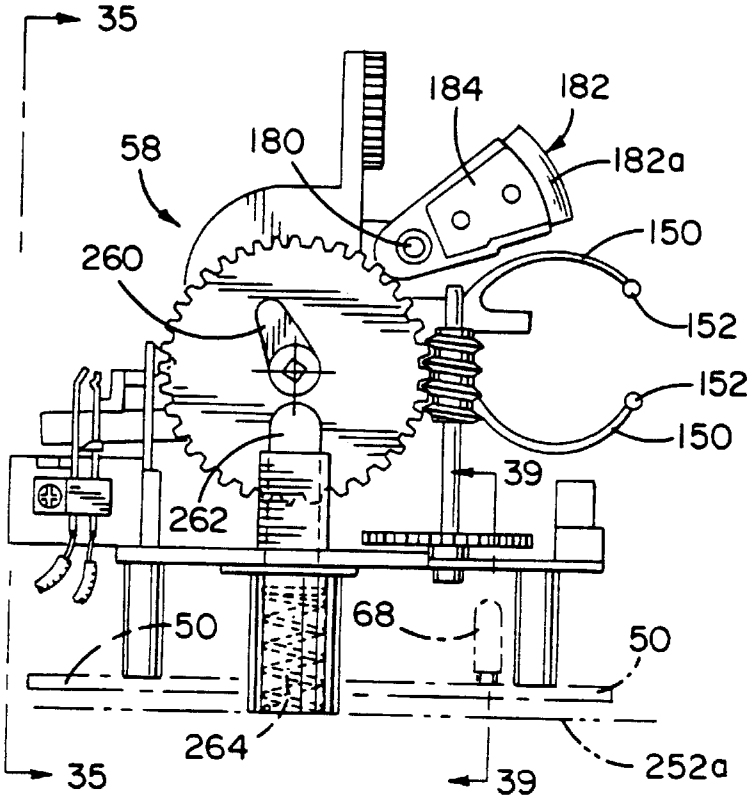
35
184
182
58
180
182a
150
260
152
152
150
39
262
50
68
50
264
252a
35
39

FIG. 34

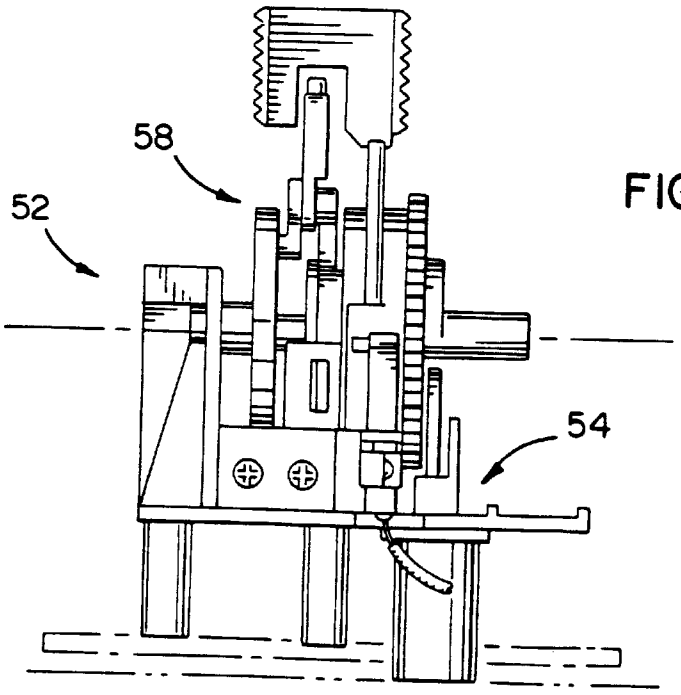
58
52
54

FIG. 35

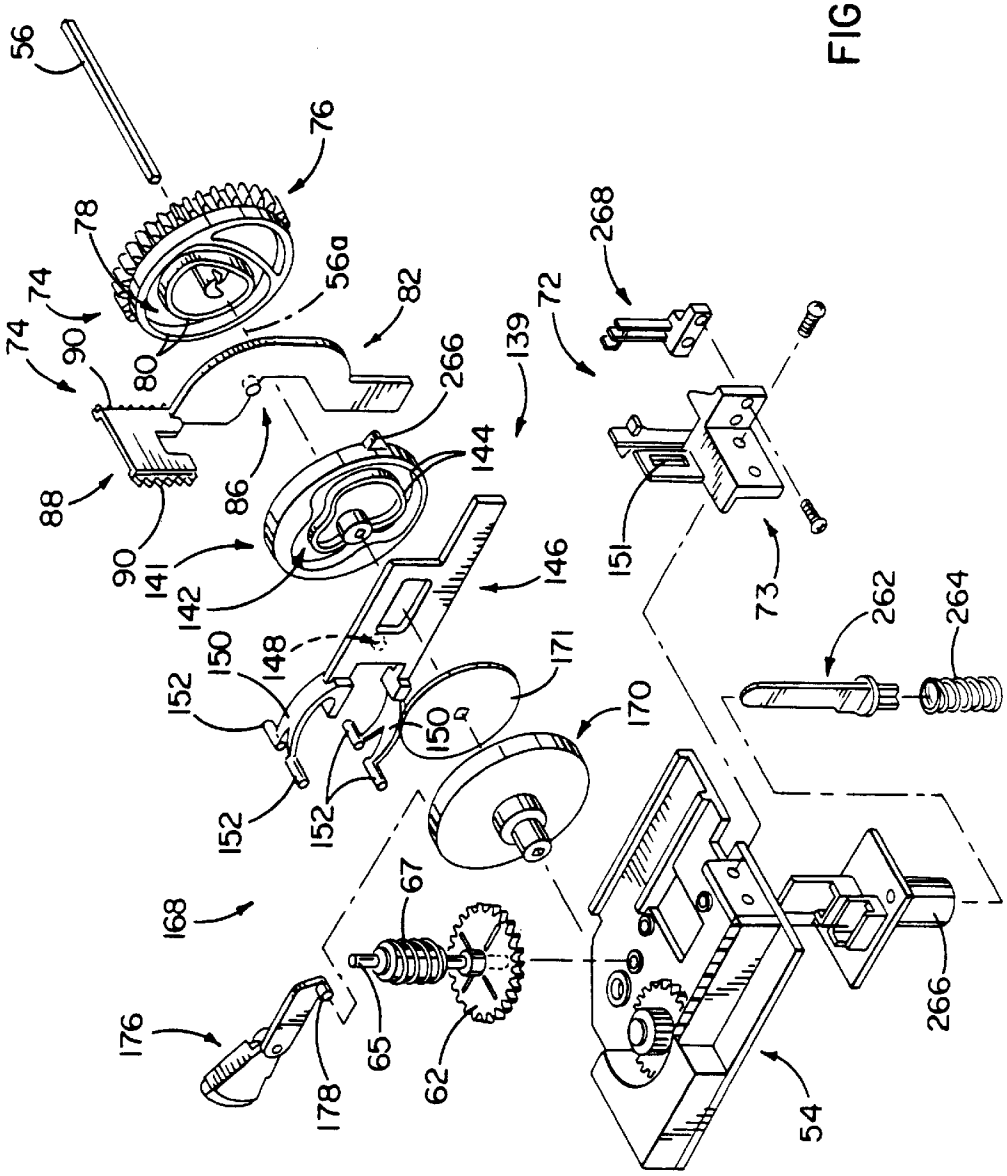
56
76
78
74
74
90
80
56a
82
88
90
86
266
139
72
268
144
141
142
146
151
73
150
148
152
152
152
150
171
170
262
264
168
67
176
178
65
62
266
54

FIG. 36

FIG. 37

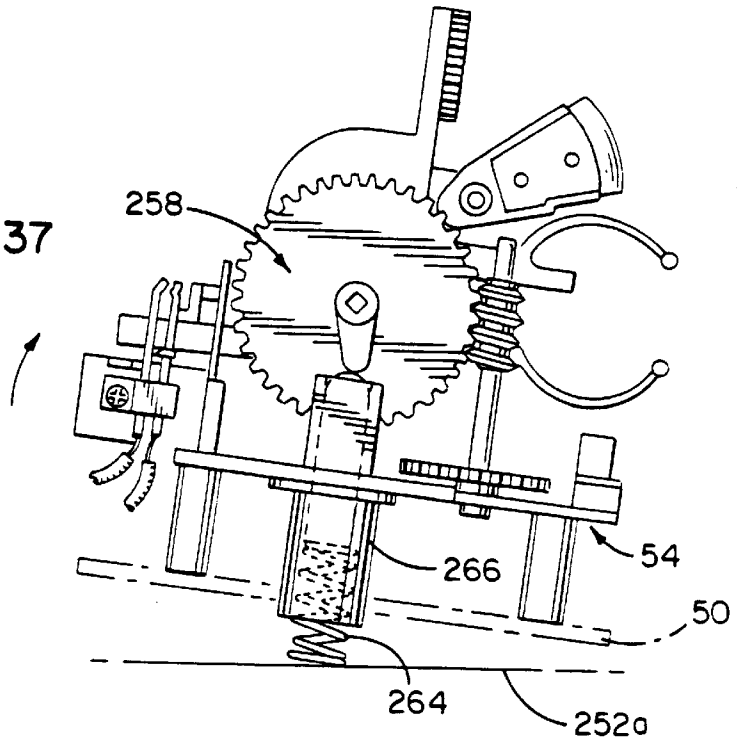

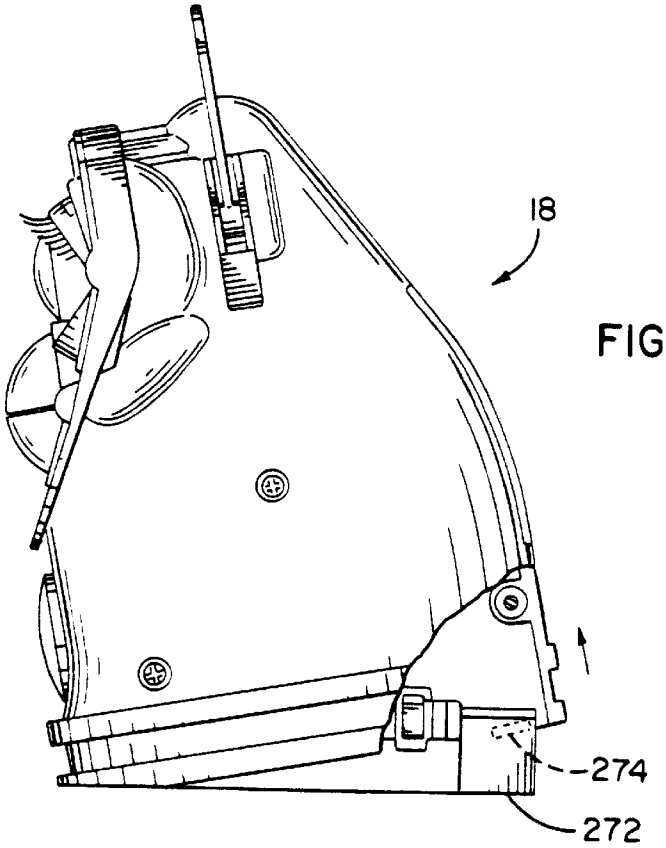

FIG. 38

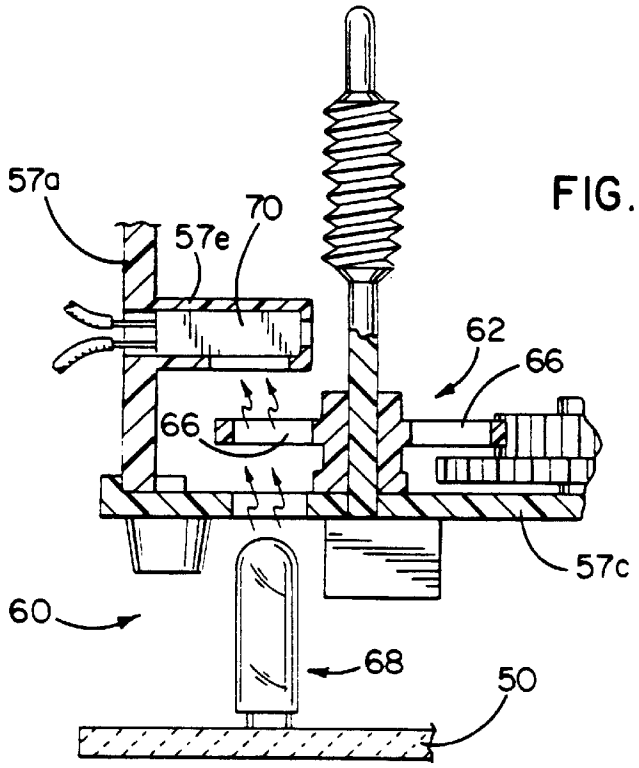

FIG. 39

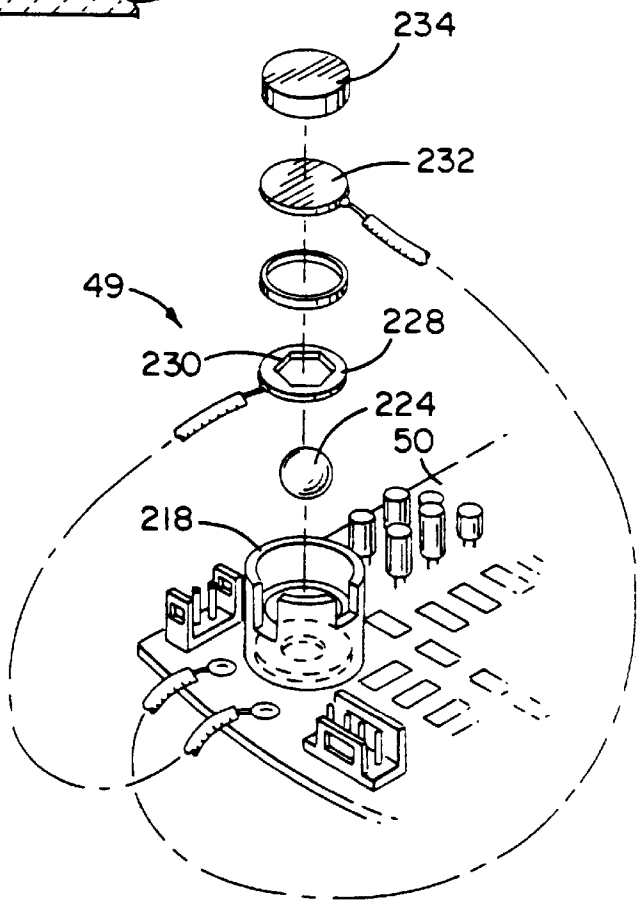

FIG. 40

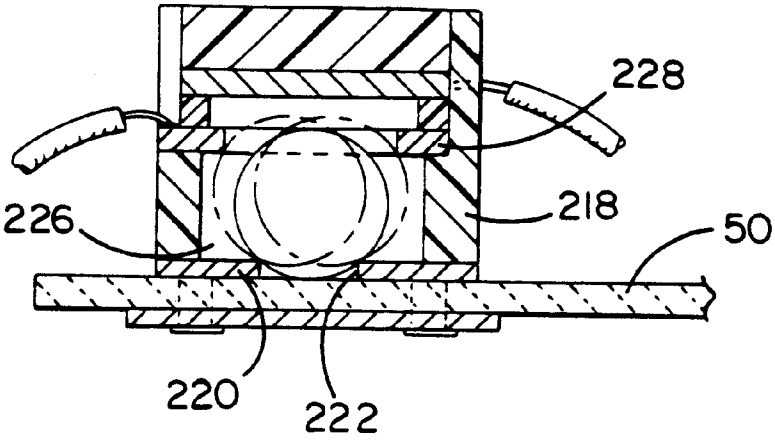

FIG. 41

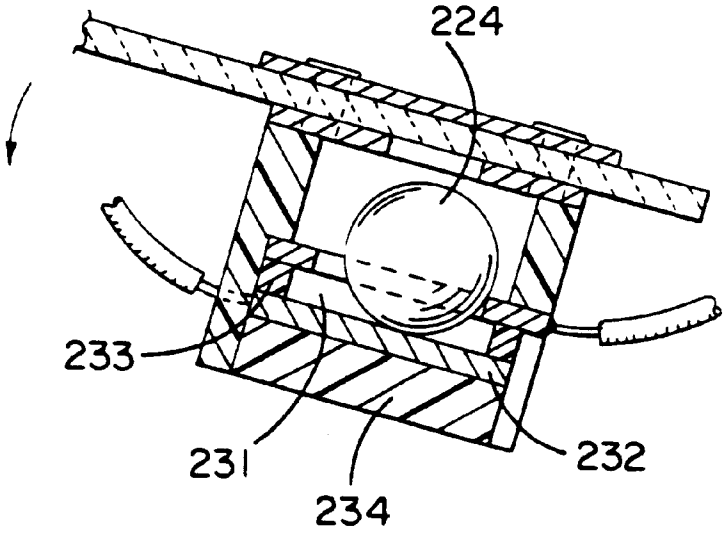

FIG. 42

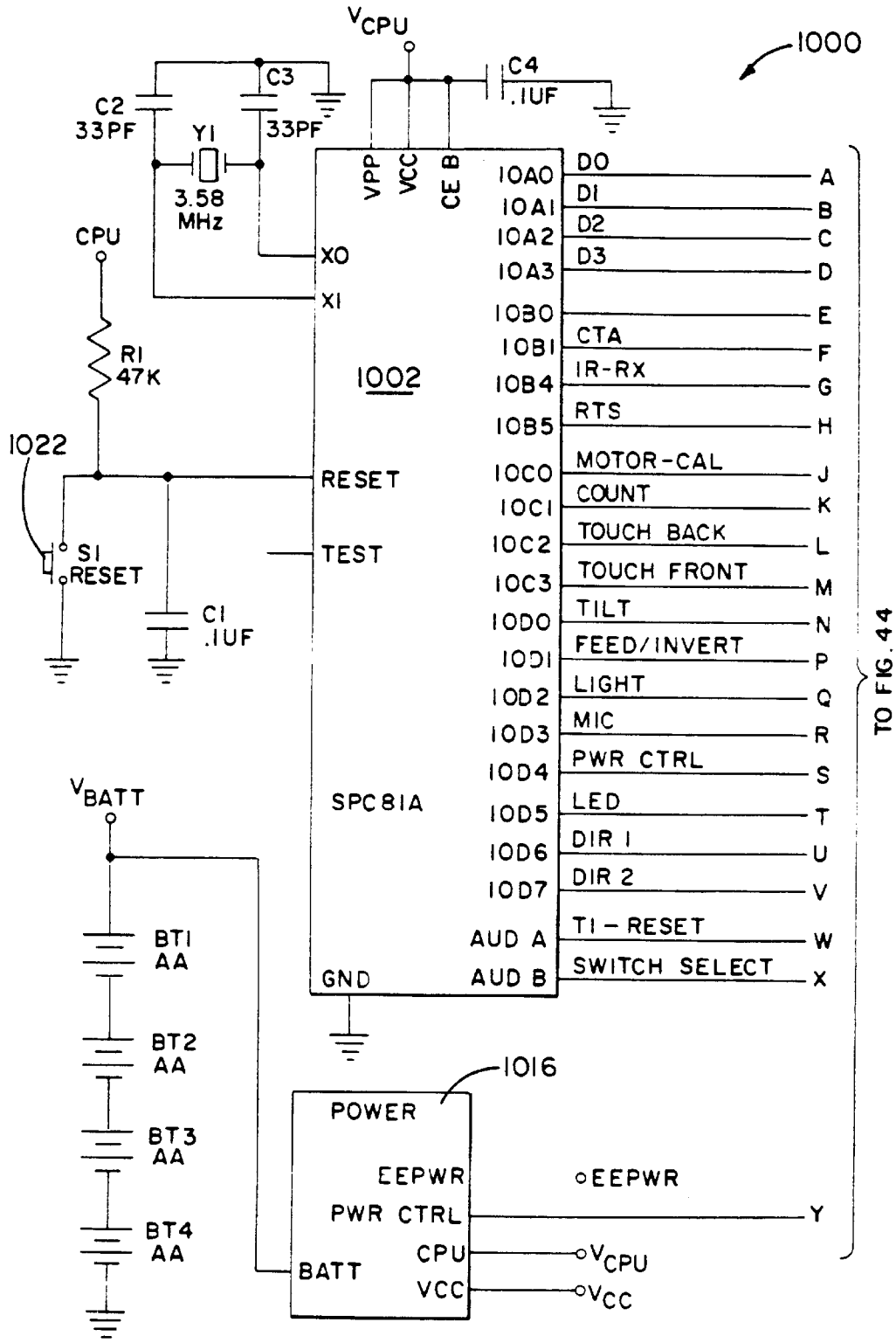
VCPU
1000
C4
.1UF
C3
33PF
C2
33PF
Y1
3.58
MHz
VPP
VCC
CE B
CPU
XO
XI
R1
47K
1002
1022
RESET
S1
RESET
TEST
C1
.1UF
SPC81A
GND
VBATT
BT1
AA
BT2
AA
BT3
AA
BT4
AA
1016
POWER
EEPWR
PWR CTRL
BATT
CPU
VCC
EEPWR
VCPU
VCC
10A0
10A1
10A2
10A3
10B0
10B1
10B4
10B5
10C0
10C1
10C2
10C3
10D0
10D1
10D2
10D3
10D4
10D5
10D6
10D7
AUD A
AUD B
DO
DI
D2
D3
CTA
IR-RX
RTS
MOTOR-CAL
COUNT
TOUCH BACK
TOUCH FRONT
TILT
FEED/INVERT
LIGHT
MIC
PWR CTRL
LED
DIR 1
DIR 2
TI-RESET
SWITCH SELECT
A
B
C
D
E
F
G
H
J
K
L
M
N
P
Q
R
S
T
U
V
W
X
Y
TO FIG. 44

FIG. 43

FIG. 44

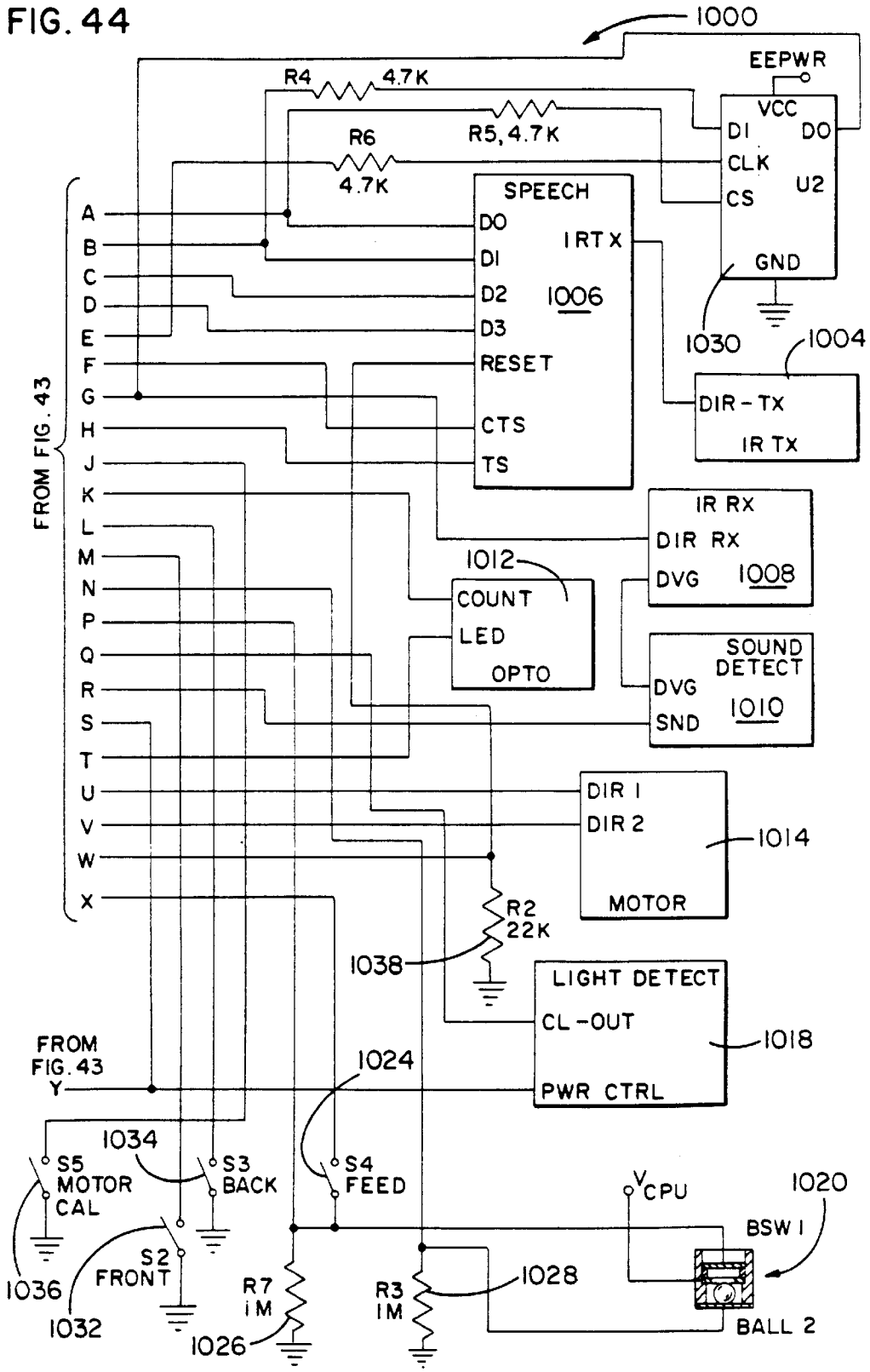
1000
EEPWR
R4
4.7K
R5, 4.7K
R6
4.7K
VCC
DI
DO
CLK
CS
U2
GND
SPEECH
DO
DI
D2
D3
RESET
CTS
TS
IRTX
1006
1030
1004
DIR-TX
IR TX
FROM FIG. 43
A
B
C
D
E
F
G
H
J
K
L
M
N
P
Q
R
S
T
U
V
W
X
IR RX
DIR RX
DVG
1008
1012
COUNT
LED
OPTO
SOUND DETECT
DVG
SND
1010
DIR 1
DIR 2
MOTOR
1014
R2
22K
1038
LIGHT DETECT
CL-OUT
PWR CTRL
1018
FROM FIG. 43
Y
1024
1034
S5
MOTOR CAL
S3
BACK
S4
FEED
VCPU
1020
BSW 1
S2
FRONT
1036
1032
R7
1M
1026
R3
1M
1028
BALL 2

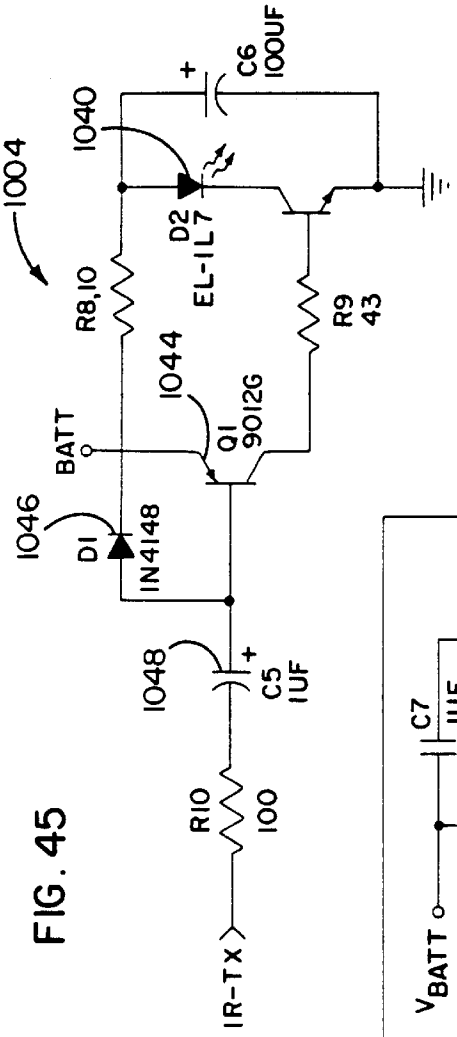
1004
1040
C6
100UF
D2
EL-1L7
R8,10
R9
43
1044
Q1
90126
BATT
1046
D1
IN4148
1048
C5
1UF
R10
100
IR-TX

FIG. 45

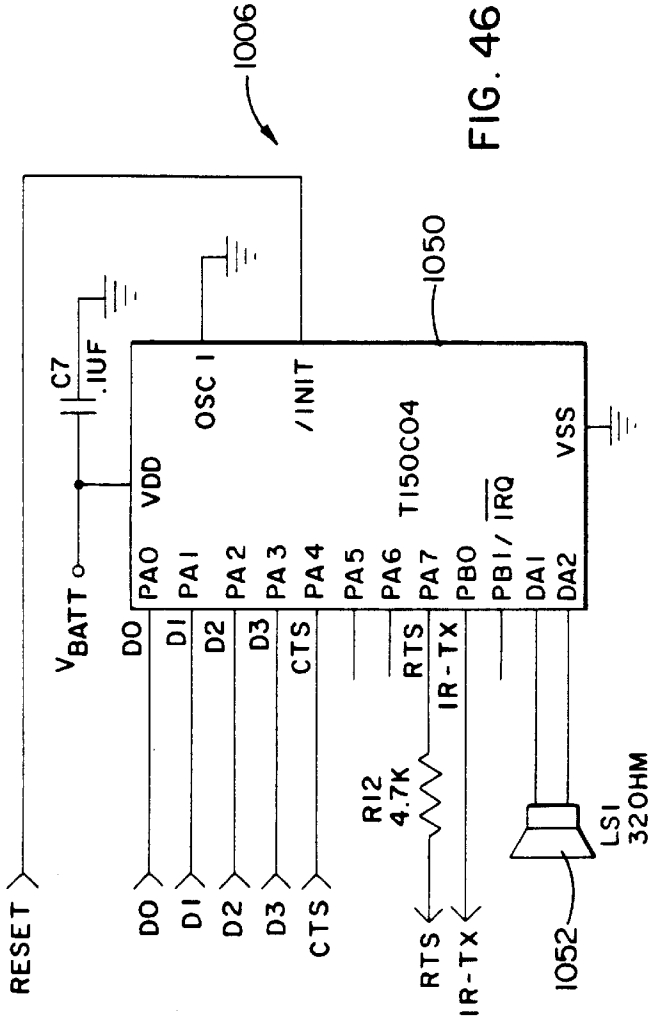
1006
1050
C7
.1UF
OSC I
/INIT
VDD
T150C04
VSS
PA0
PA1
PA2
PA3
PA4
PA5
PA6
PA7
PB0
PB1/ IRQ
DA1
DA2
VBATT
DO
D1
D2
D3
CTS
RTS
IR-TX
R12
4.7K
LS1
32OHM
RESET
1052

FIG. 46

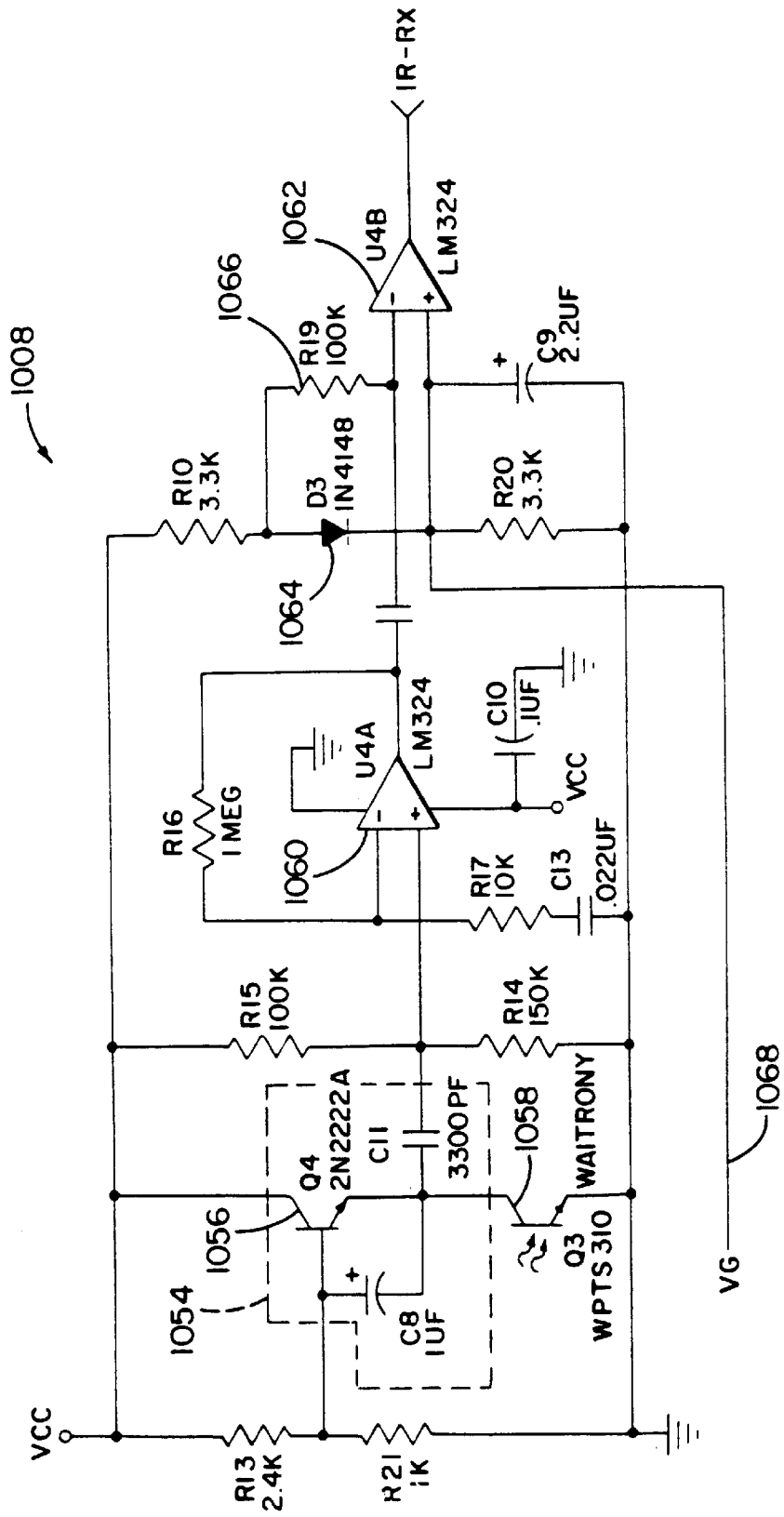
1008
IR-RX
1062
U4B
LM324
1066
R19
100K
C9
2.2UF
R10
3.3K
D3
IN4148
R20
3.3K
1064
U4A
LM324
C10
.1UF
VCC
R16
1 MEG
1060
R17
10K
C13
.022UF
R15
100K
R14
150K
Q4
2N2222A
C11
3300PF
1058
WAITRONY
1056
Q3
WPTS310
1054
C8
1UF
VG
1068
VCC
R13
2.4K
R21
1K

FIG. 47

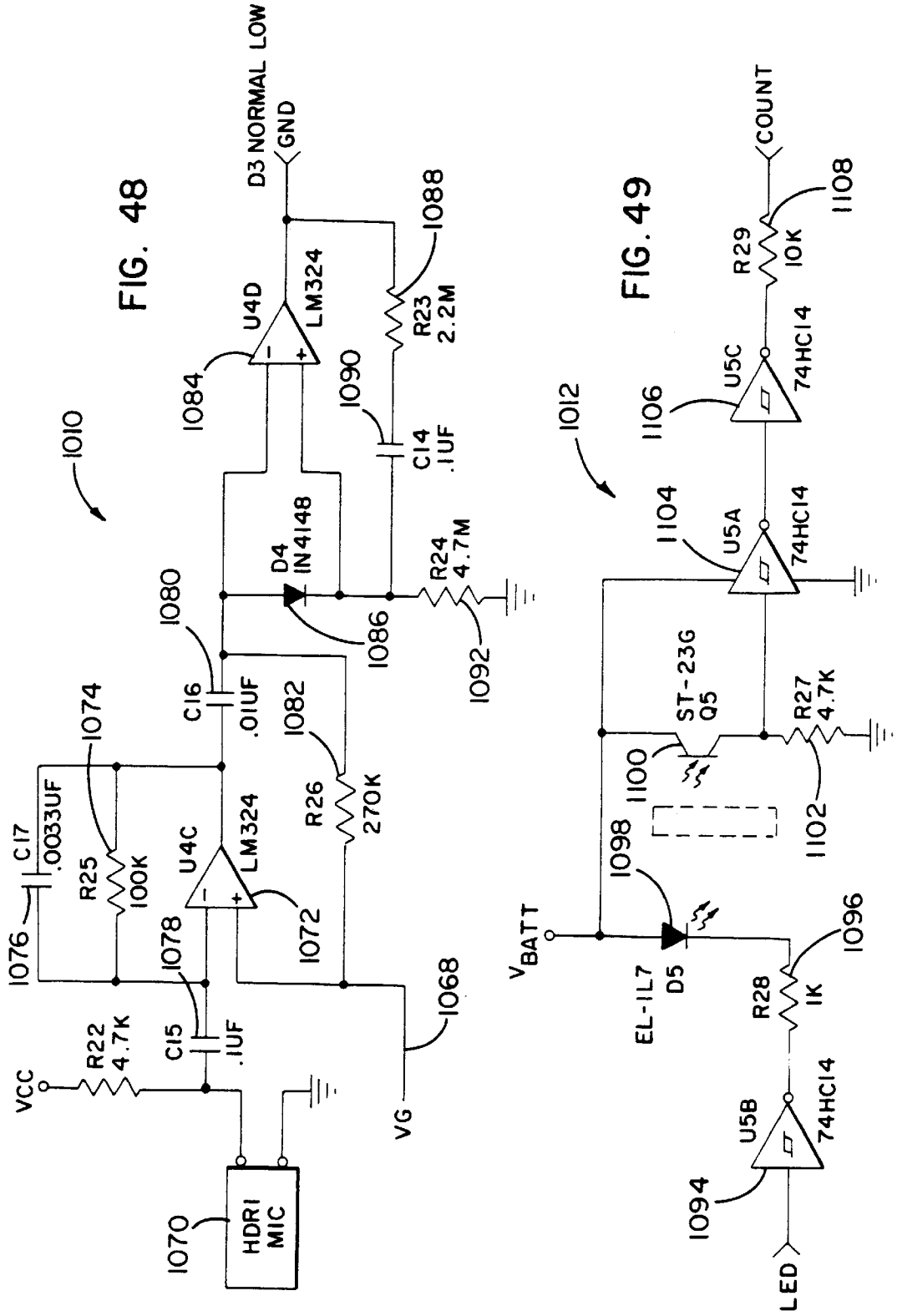
FIG. 48
1010
D3 NORMAL LOW
GND
U4D
LM324
1084
1088
R23
2.2M
1090
C14
.1UF
D4
IN4148
1086
R24
4.7M
1092
1080
C16
.01UF
1082
R26
270K
1074
C17
.0033UF
R25
100K
U4C
LM324
1072
1076
1078
C15
.1UF
R22
4.7K
VCC
1068
VG
1070
HDRI
MIC
FIG. 49
1012
COUNT
1108
R29
10K
U5C
74HC14
1106
U5A
74HC14
1104
ST-23G
Q5
1100
R27
4.7K
1102
1098
V_{BATT}
EL-IL7
D5
R28
1K
1096
U5B
74HC14
1094
LED

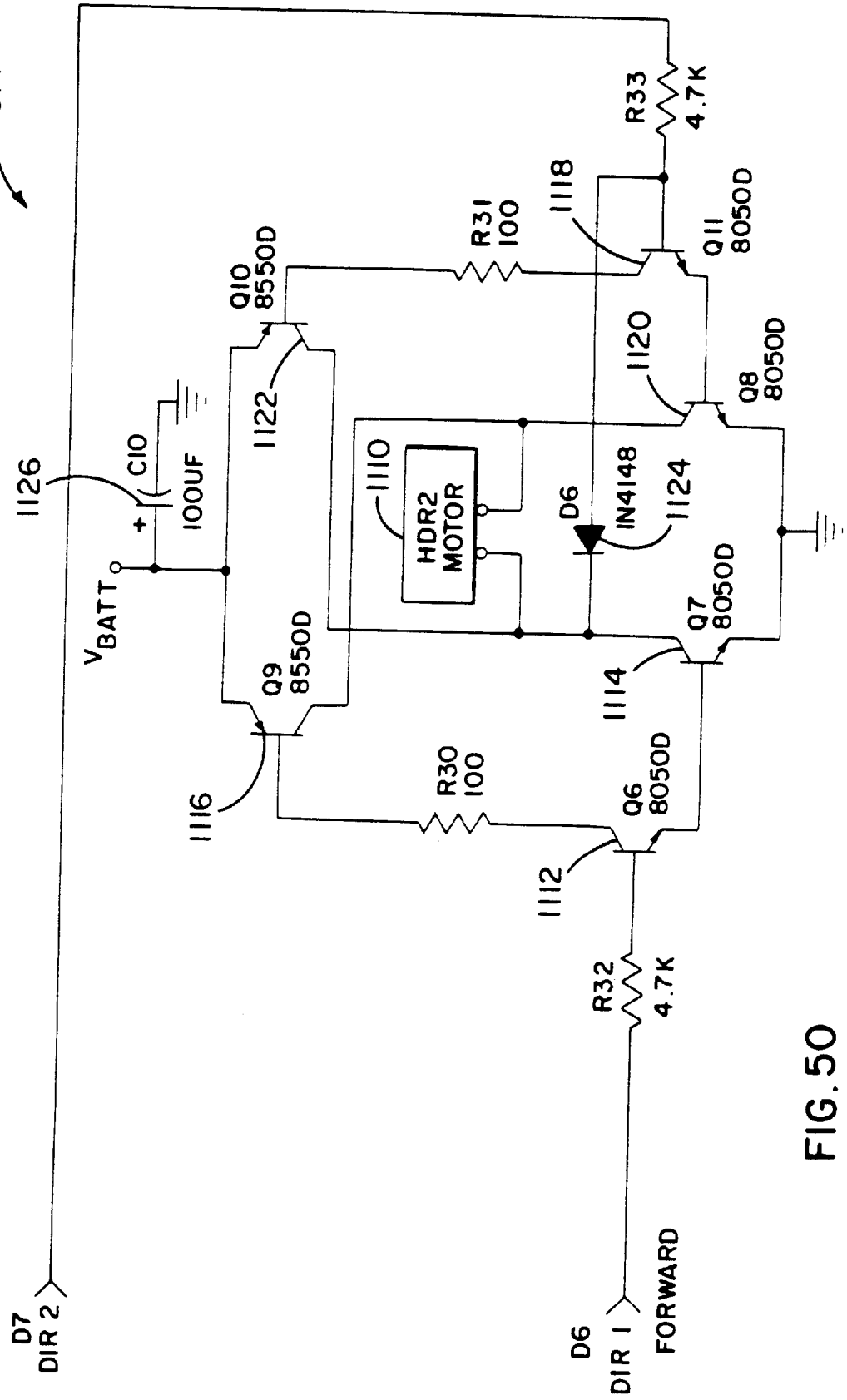
1014
R33
4.7K
1118
R31
100
Q11
8050D
Q10
8550D
1120
Q8
8050D
1122
C10
100UF
1126
1110
HDR2
MOTOR
D6
IN4148
1124
V_{BATT}
Q7
8050D
Q9
8550D
1114
1116
R30
100
Q6
8050D
1112
R32
4.7K
D7
DIR 2
D6
DIR 1
FORWARD

FIG. 50

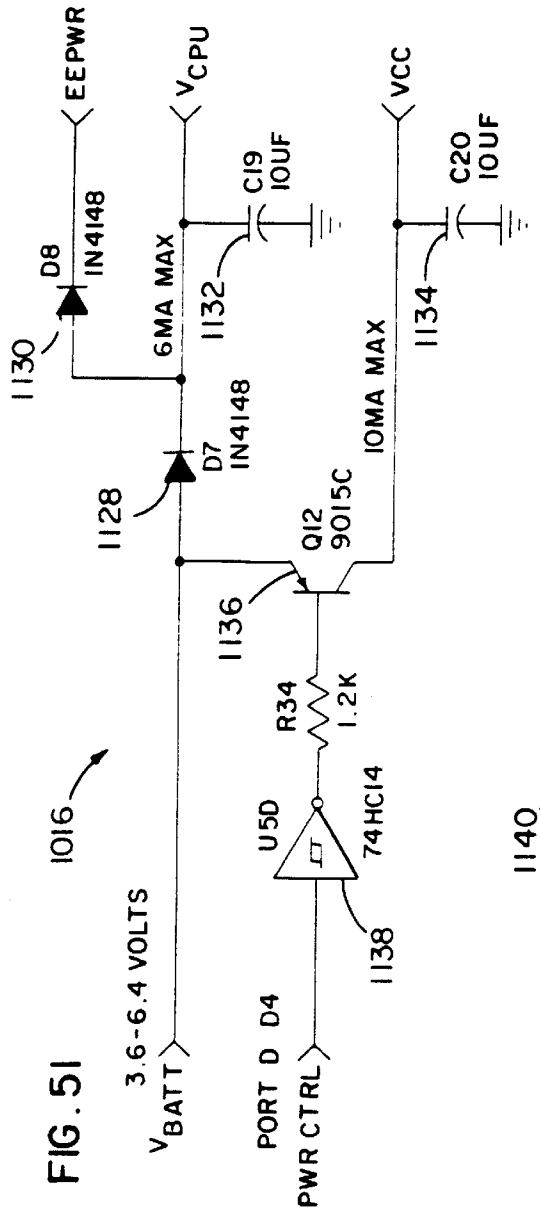
EEPWR
V_{CPU}
VCC
D8
IN4148
C19
10UF
C20
10UF
1130
6MA MAX
1132
1134
10MA MAX
D7
IN4148
1128
Q12
9015C
1136
R34
1.2K
1016
U5D
74HC14
1138
3.6-6.4 VOLTS
V_{BATT}
PORT D D4
PWR CTRL

FIG. 51

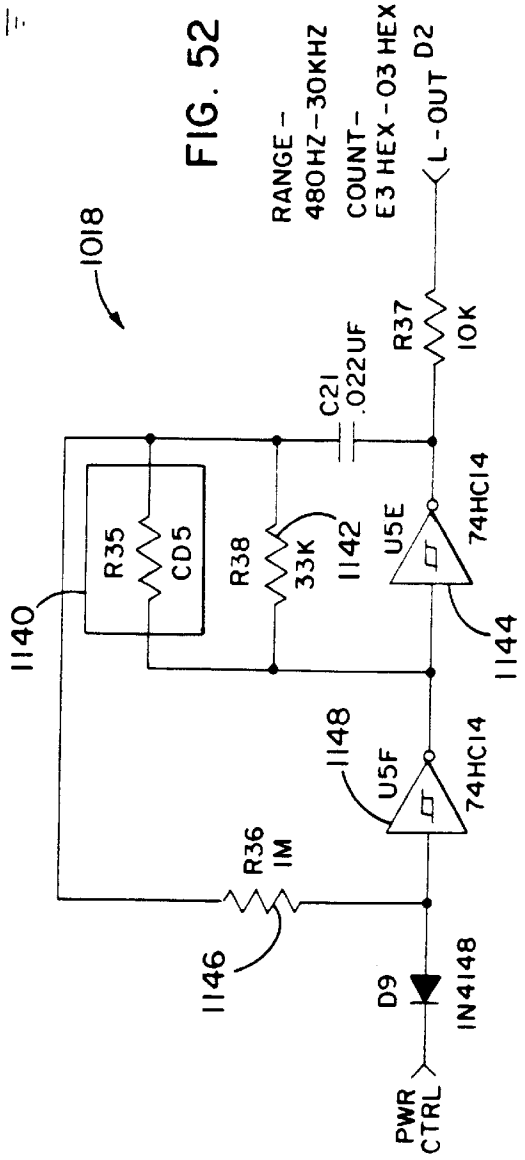
1018
RANGE-
480HZ-30KHZ
COUNT-
E3 HEX-03 HEX
L-OUT D2
R37
10K
C21
.022UF
R35
CD5
R38
33K
1142
U5E
74HC14
1140
1144
1148
U5F
74HC14
R36
1M
1146
D9
IN4148
PWR
CTRL

FIG. 52

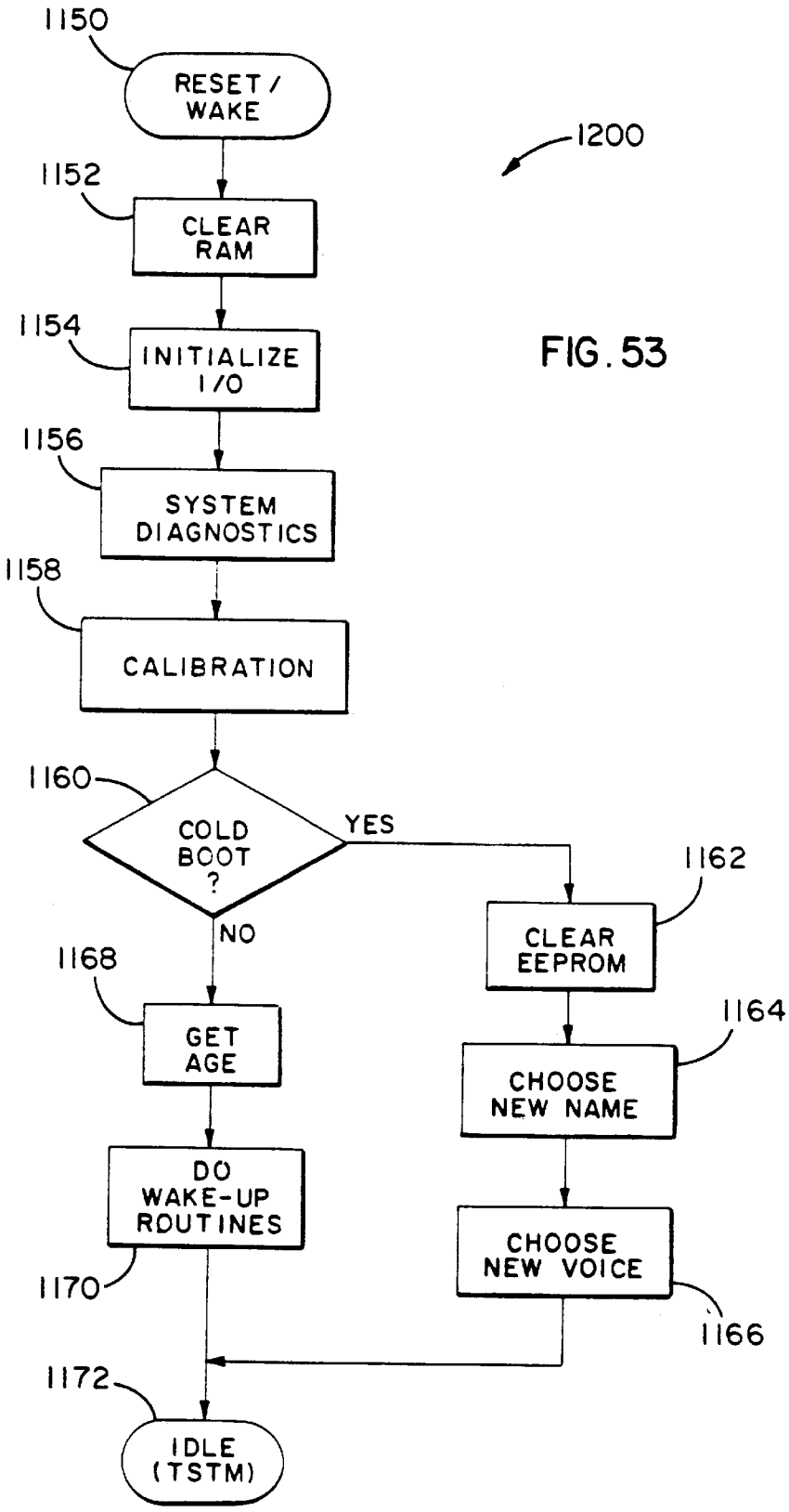
1150
RESET / WAKE
1200
1152
CLEAR RAM
1154
INITIALIZE I/O
1156
SYSTEM DIAGNOSTICS
1158
CALIBRATION
1160
COLD BOOT ?
YES
NO
1162
CLEAR EEPROM
1164
CHOOSE NEW NAME
1166
CHOOSE NEW VOICE
1168
GET AGE
1170
DO WAKE-UP ROUTINES
1172
IDLE (TSTM)

FIG. 53

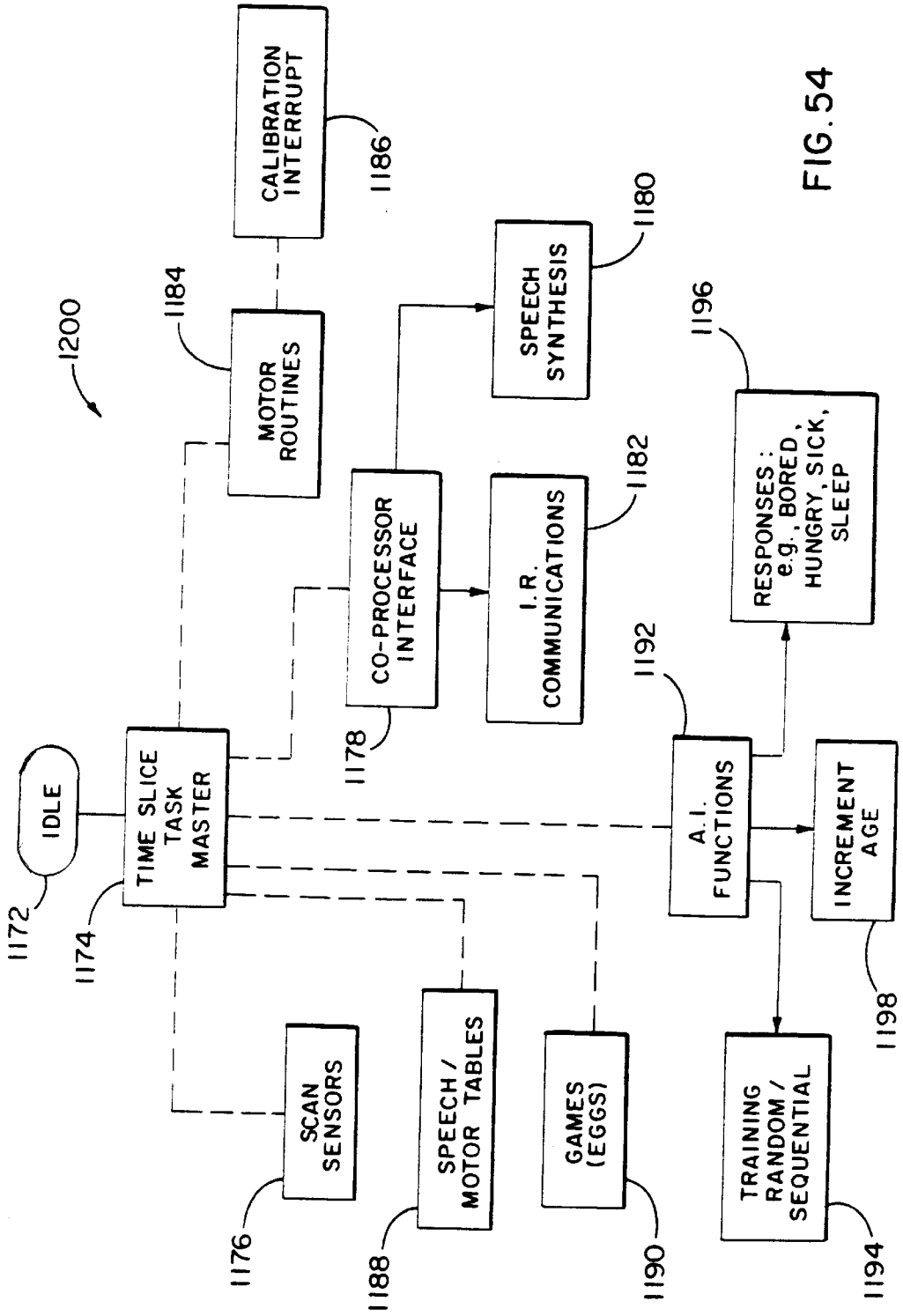
1200
IDLE
1172
TIME SLICE TASK MASTER
1174
SCAN SENSORS
1176
SPEECH / MOTOR TABLES
1188
GAMES (EGGS)
1190
TRAINING RANDOM / SEQUENTIAL
1194
INCREMENT AGE
1198
A.I. FUNCTIONS
1192
RESPONSES: e.g., BORED, HUNGRY, SICK, SLEEP
1196
CO-PROCESSOR INTERFACE
1178
I.R. COMMUNICATIONS
1182
SPEECH SYNTHESIS
1180
MOTOR ROUTINES
1184
CALIBRATION INTERRUPT
1186

FIG. 54

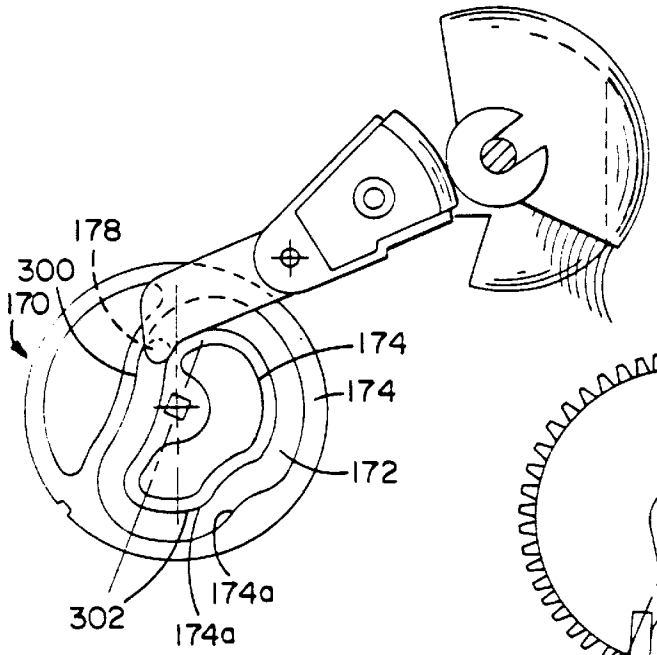

FIG. 55

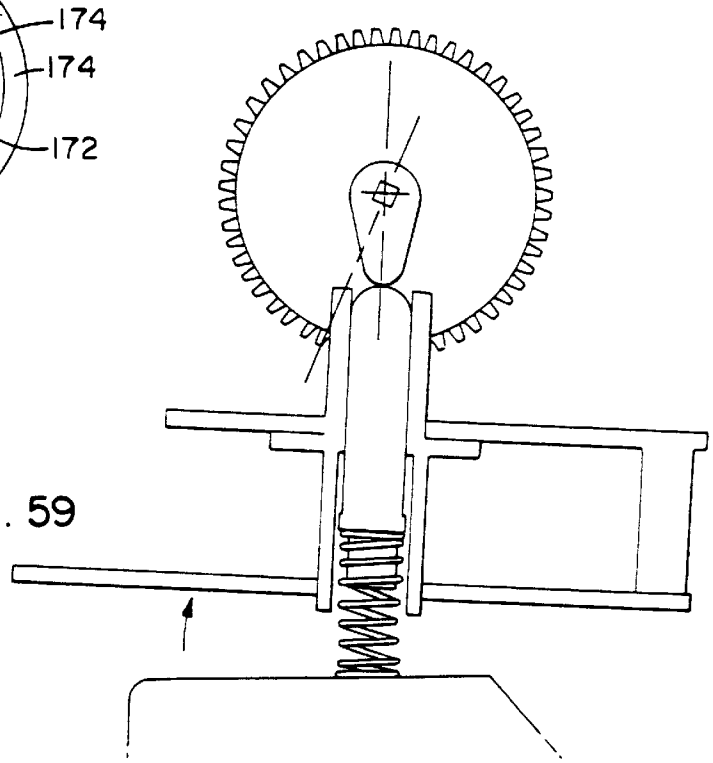

FIG. 59

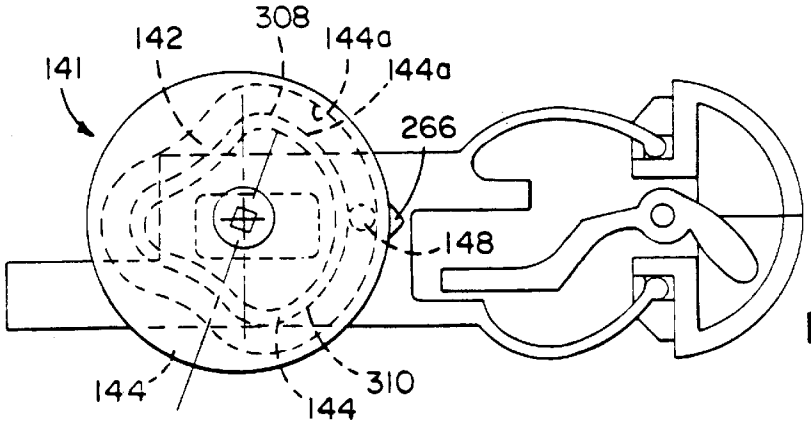

FIG. 56

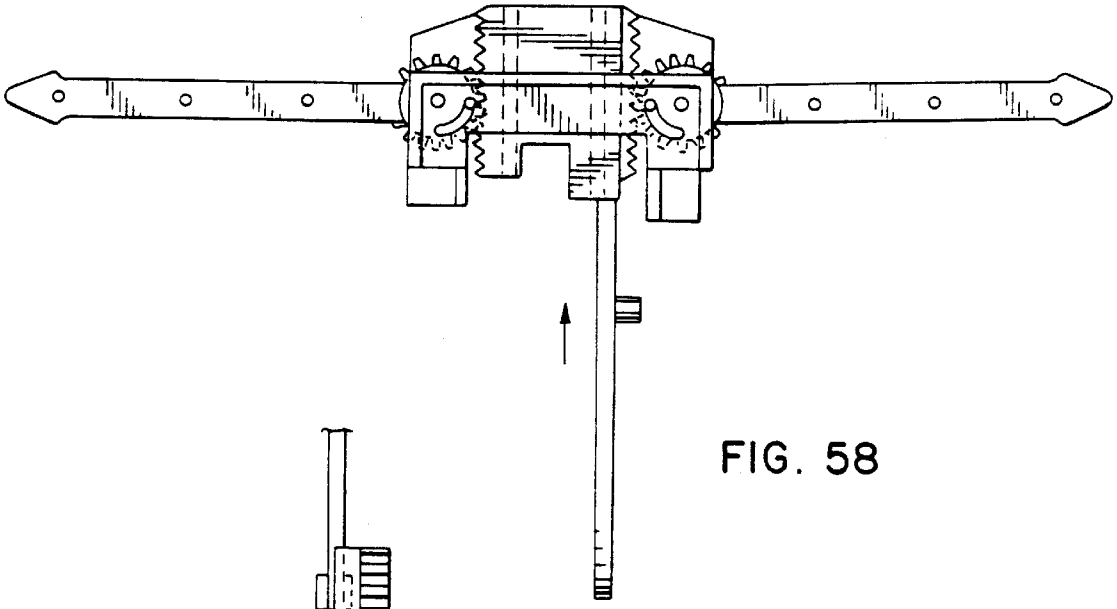

FIG. 58

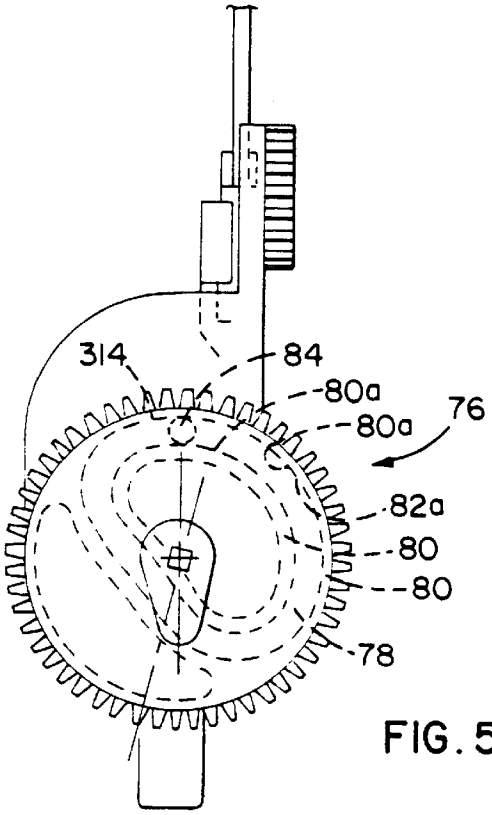

FIG. 57

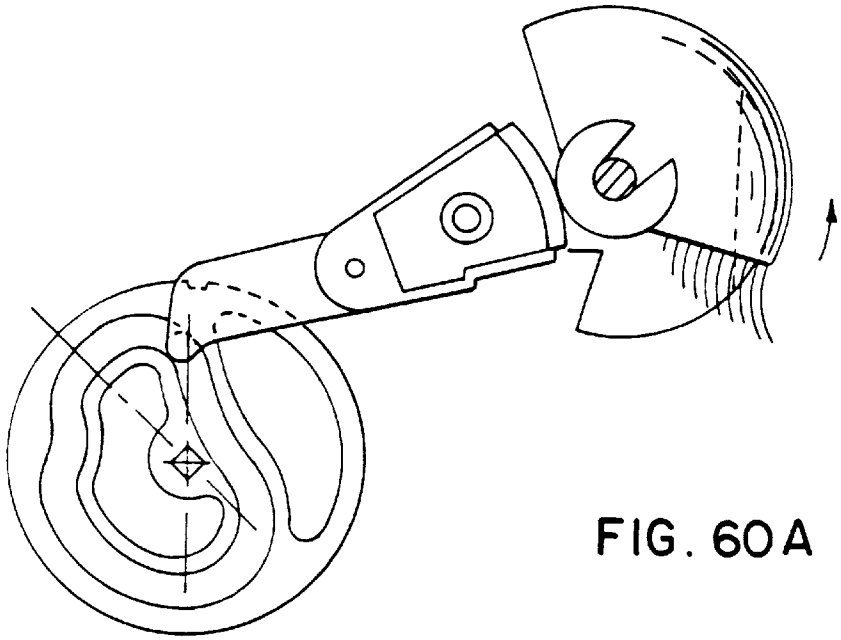

FIG. 60A

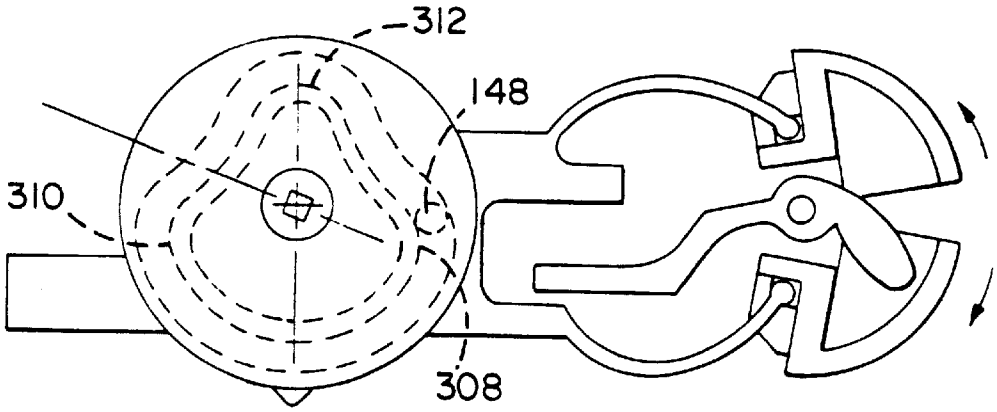

FIG. 61A

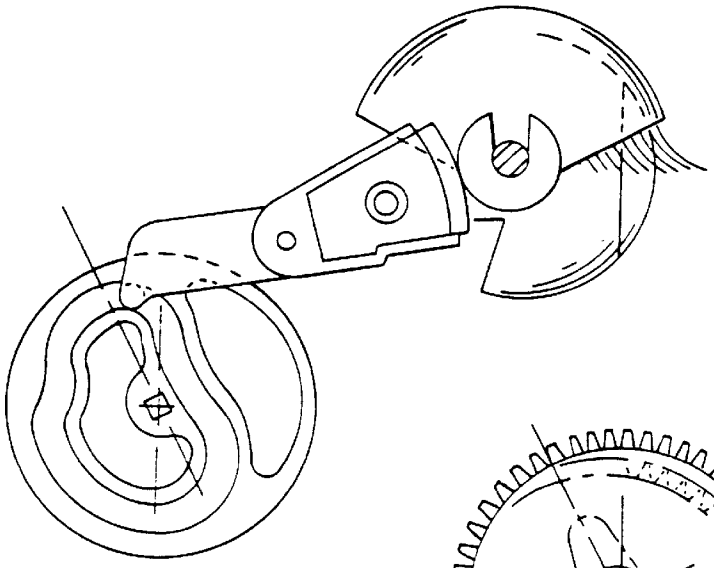

FIG. 60B

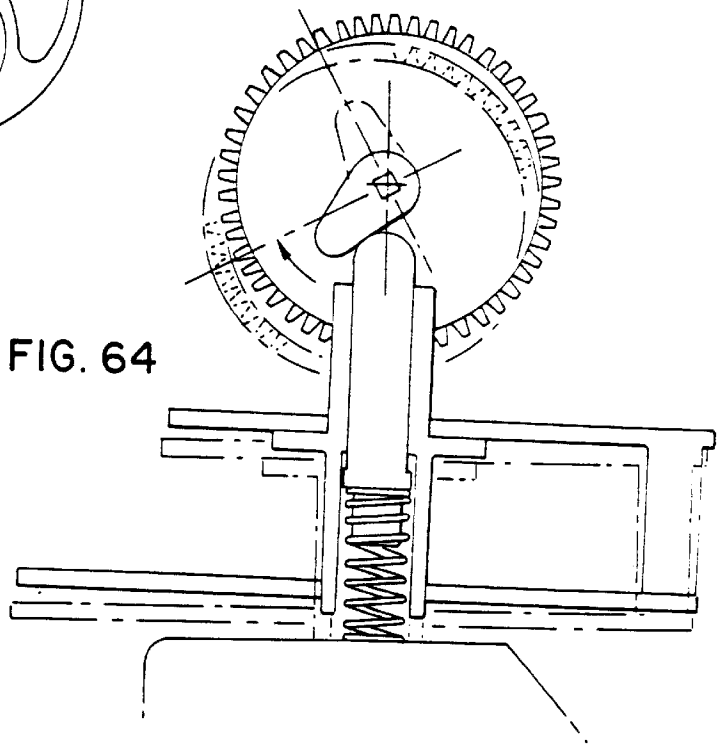

FIG. 64

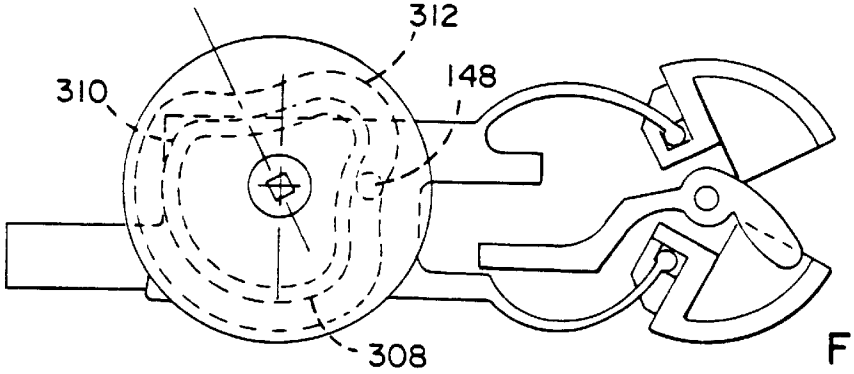

FIG. 61B

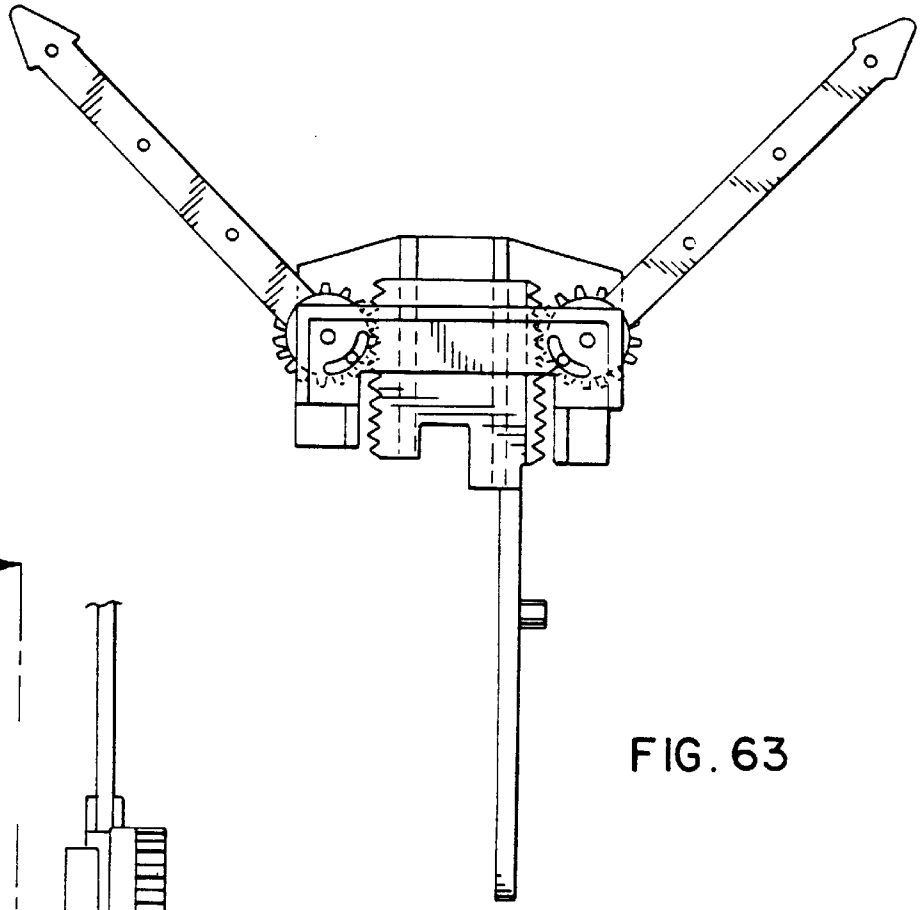

FIG. 63

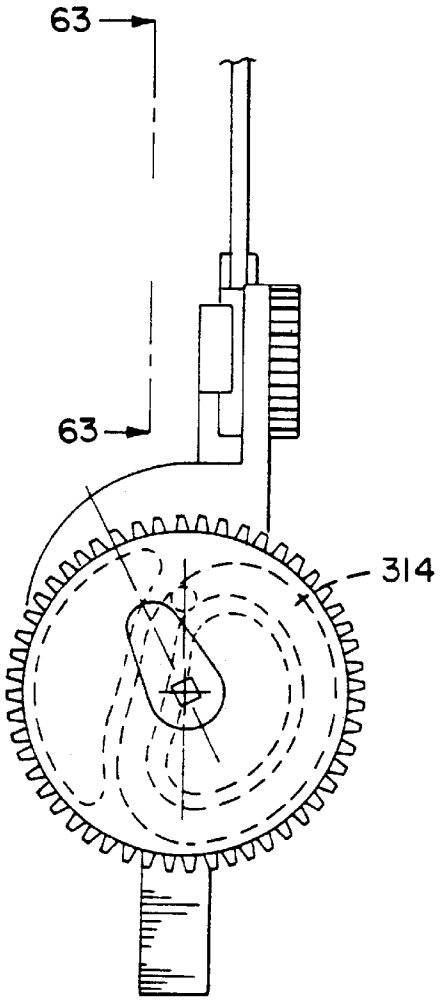

FIG. 62

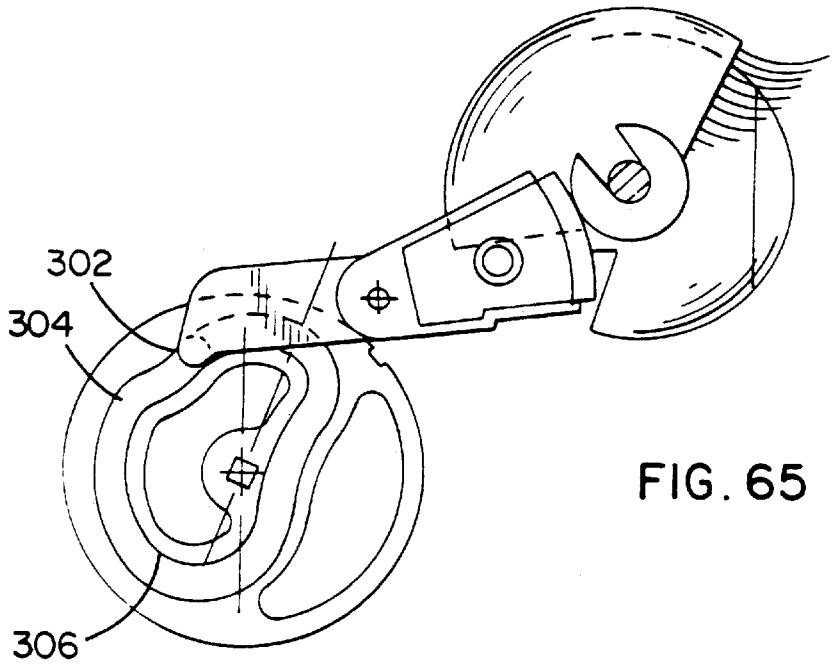

FIG. 65

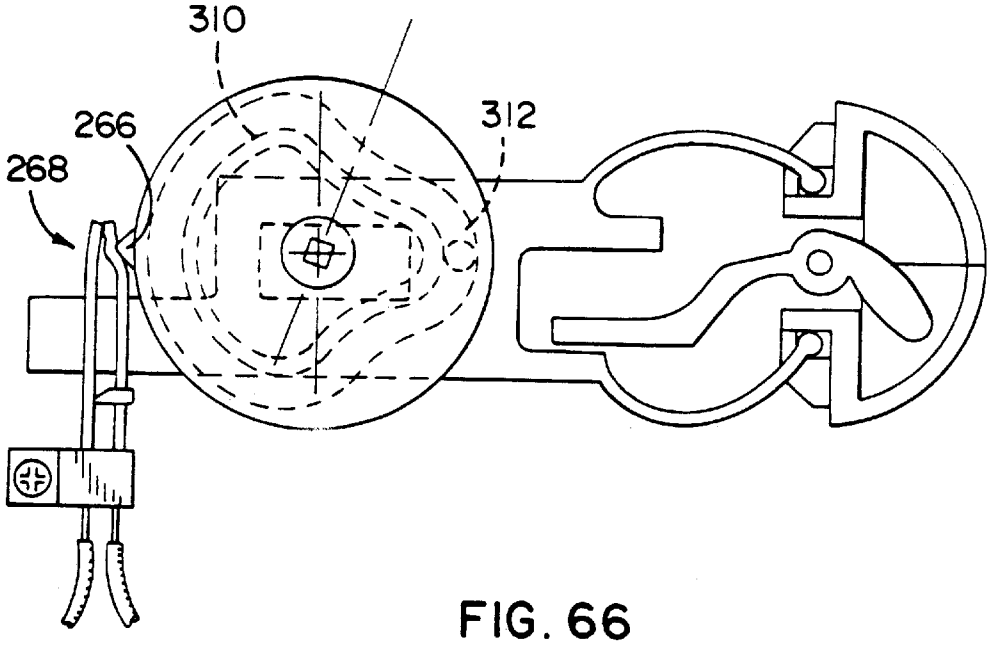

FIG. 66

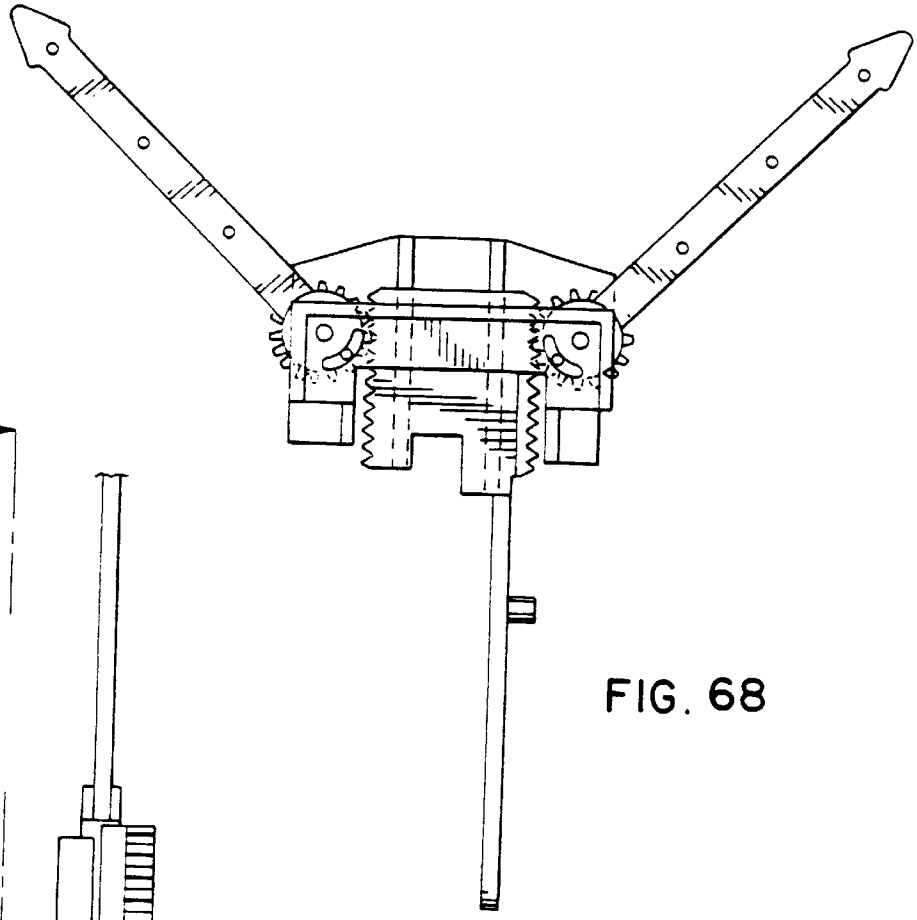

FIG. 68

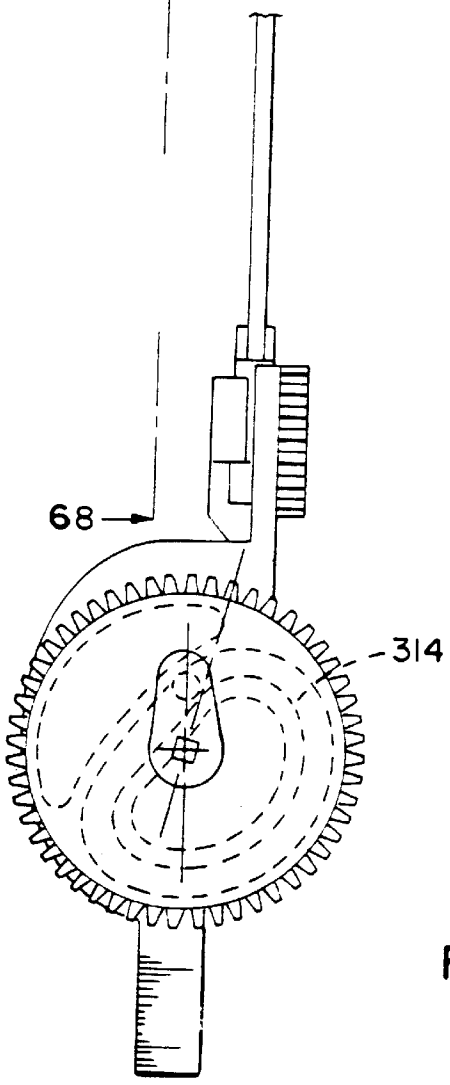

FIG. 67

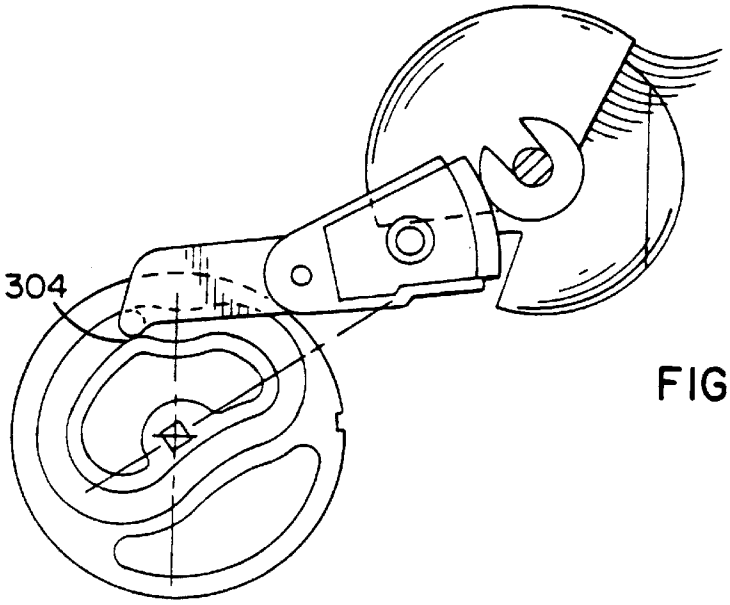

FIG. 69

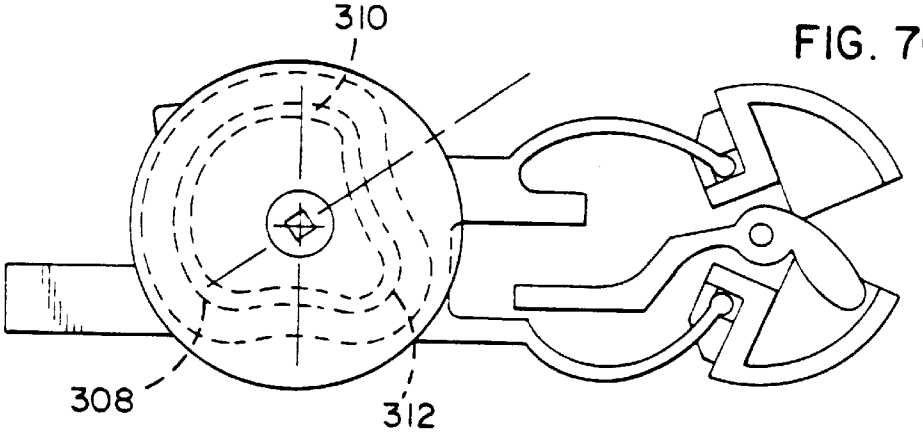

FIG. 70

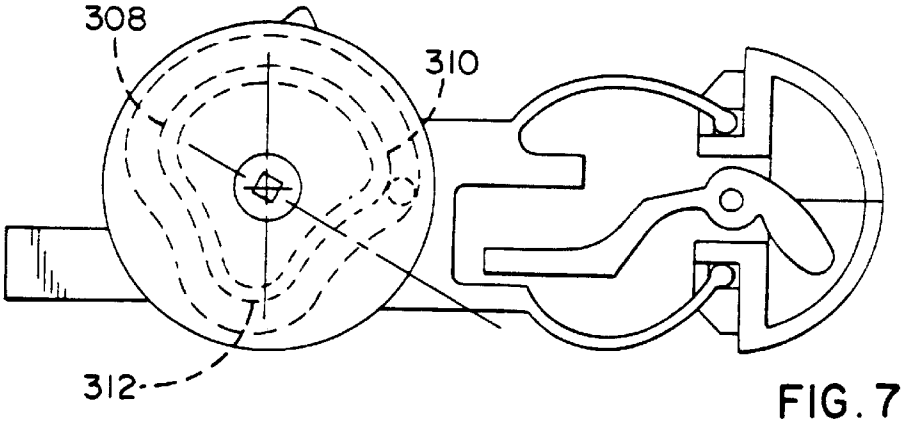

FIG. 71

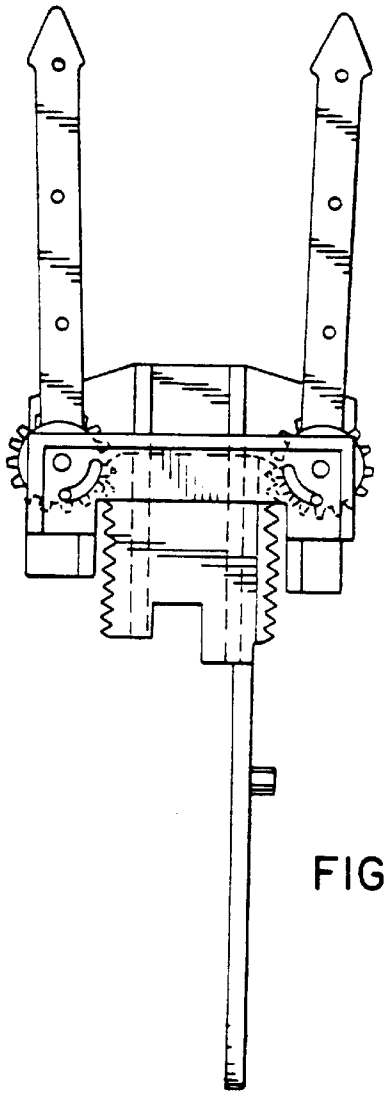

FIG. 73

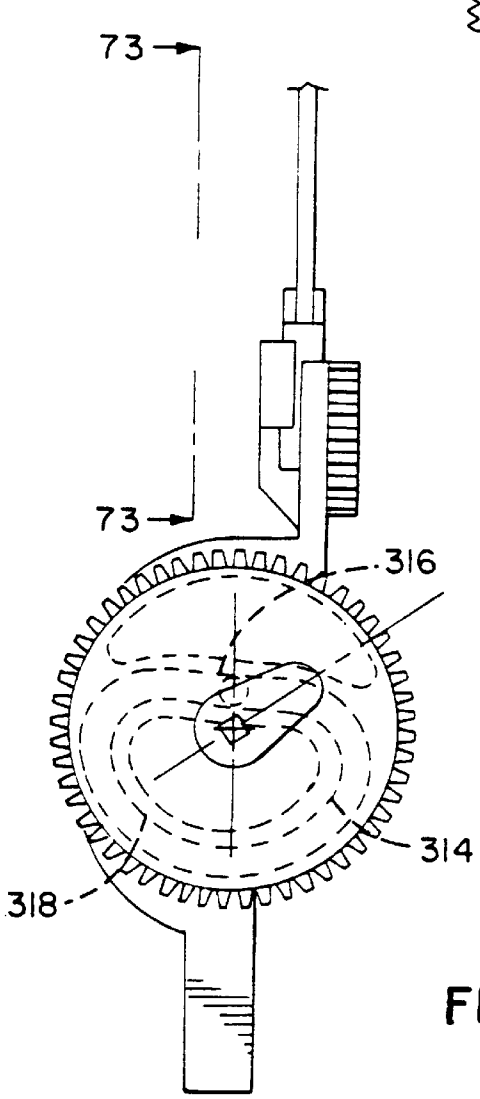

FIG. 72

INTERACTIVE TOY

CROSS REFERENCE TO RELATED APPLICATION

This application is a division of prior application Ser. No. 09/211,101, filed Dec. 15, 1998, now U.S. Pat No. 6,149,490, which is hereby incorporated by reference.

MICROFICHE APPENDIX

This application includes, pursuant to 37 C.F.R. §§1.77 (c)(2), 1.96(b), a microfiche appendix consisting of four (4) sheets of microfiche containing 297 frames of a program listing embodying the present invention.

FIELD OF THE INVENTION

The present invention relates to interactive toys and, more particularly, to a very compact interactive toy that can perform movements with body parts thereof in a precisely controlled and coordinated manner in response to external sensed conditions.

BACKGROUND OF THE INVENTION

One major challenge with toys in general is keeping a child interested in playing with the toy for more than a short period of time. To this end, toy dolls and animals have been developed that can talk and/or have moving body parts. The goal with these devices is to provide a plaything that appears to interact with the child when they play with the toy.

One serious drawback in prior art toys that attempted to provide life-like interaction for the child is the increased cost associated with the various components needed to simulate the functions necessary to provide the toy with life-like mannerisms. In this regard, the size of the toy also is an issue as it is generally true that the more the toy can do in terms of simulating life-like actions and speech, the greater the size of the toy to accommodate the electronics and mechanical linkages and motors utilized therein. Furthermore, and especially in regard to the mechanical construction thereof, the greater number of moving body parts and associated linkages and the greater number of motors also increases the likelihood of failures such as due to impacts. Such failures are unacceptable for children's toys as they are prone to being dropped and knocked around, and thus must be reliable in terms of their ability to withstand impacts and pass drop tests to which they may be subjected. In addition, the use of several motors and associated linkages drives up the cost of the toy which is undesirable for high volume retail sales thereof. Accordingly, there is a need for an interactive toy that provides life-like interaction with the user that is of a compact size and which is reasonably priced for retail sale.

In addition to the above noted problems, another significant shortcoming with prior art toys is that even in those toys that include a lot of different moving part and significant electronics incorporated therewith, the movement of the parts tends to be less than life-like. More particularly, many prior interactive toys utilize a single direction motor that drives a control shaft or shafts and/or cams for rotation in one direction so that the movement of the parts controlled thereby repeat over and over to produce a cyclical action thereof. As is apparent, cyclical movement of toy parts does not produce part motions that appear to be life-like and consequently a child's interest in the toy can wane very rapidly once they pick up on the predictable nature of the movement of the toy parts.

Thus, where prior art interactive toys have several moving parts, the life-like action attributed to these moving parts is due to the random nature of their movements with respect to each other as the individual parts tend to move in a predictable cyclic action; in other words, there is no control over the motion of a specific part individually on command in prior toys, and highly controlled coordination of one part with the movement of other parts is generally not done. For example, in a toy that has blinking eyes, cams can be used to cause the blinking. However, the blinking action does not occur in a precise, controlled manner, and instead occurs cyclically with the timing of the occurrence of the blink not being of significance in terms of the cam design. As would be expected, the focus of the design of the cams for parts such as the above-described blinking eyes is to simply make sure that all the parts that are moved thereby undergo the proper range of motion when the cam is driven. Thus, there is a need for an interactive toy that provides for more precisely controlled and coordinated movements between its various moving parts and allows for individual parts to be moved in a more realistic manner over the cyclic movement provided for parts in prior toys.

SUMMARY OF THE INVENTION

In accordance with the present invention, a very compact interactive toy is provided that provides highly life-like and intelligent seeming interaction with the user thereof. The toy can take the form of a small animal-like creature having a variety of moving body parts that have very precisely controlled and coordinated movements thereof so as to provide the toy with life-like mannerisms. The toy utilizes sensors for detecting sensory inputs which dictate the movements of the body parts in response to the sensed inputs. The sensors also allow several of the toys to interact with each other, as will be described more fully hereinafter. The body parts are driven by a single motor which is relatively small in terms of its power requirements given the large number of different movements that it powers. In addition, the motor is reversible so that the body parts can be moved in a non-cyclic life-like manner.

More particularly, the drive system that powers the movement of the toy body parts, e.g. eye, mouth, ear and foot assemblies, in addition to the single small electric motor includes a single control shaft that mounts cam mechanisms associated with each body part for causing movement thereof when the motor is activated. The cam mechanisms include programmed cam surfaces so as to provide the body parts with precisely controlled movements. The programmed cam surfaces include active portions for generating the full range of movement of the associated body parts. Thus, when the motor is activated by the controller, it can cause the cam mechanisms to traverse the active portions of their cam surfaces for movement of the associated body parts. Every position on the programmed cam surfaces is significant to the controller in terms of causing the appropriate and desired movement of the body parts in response to the detected input from the toy sensors.

Further, because the motor is reversible, the control shaft can be rotated so as to cause a specific cam mechanism to traverse its programmed cam surface active portion and then cause back and forth rotations of the shaft for corresponding back and forth movements of the associated body part such as blinking of the eyes and/or opening and closing of the mouth and/or raising or lowering of the ears. In this manner, the body parts can be provided with a non-cyclic movement for making the toy to appear to be more life-like than prior toys that simply had unidirectional rotating shafts for cams

of body parts which created repetitive and predictable motion thereof. In these prior toys that simply utilize a single directional motor for driving shafts and cams for repetitive cycling of body parts, the importance of the cam surfaces are minimized. On the other hand, in the present invention the cams have surfaces that are programmed for very precise and controlled movements of the body parts in particular ranges of shaft movements such that generally every point on a particular cam surface has meaning to the controller in terms of what type of movement the body part is undergoing and where it needs to be for its subsequent movement, or for when the body part is to remain stationary. In this manner, the controller can coordinate movements of the body parts to provide the toy with different states such as sleeping, waking or excited states. Further, the controller is provided with sound generating circuitry for generating words that complement the different states such as snoring in the sleeping state or various exclamations in the excited state.

As previously stated, the motor preferably is a very small, low power electric motor that is effective to drive all the different body parts of the toy for all of their movements while keeping the toy economical and minimizing its power requirements to provide acceptable battery life for the toy. Nevertheless, the small, low cost motor utilized with the toy herein still has to be precision controlled in terms of the position of the control shaft which rotates the cams of the body parts. In this regard, the present invention employs an optical counter assembly which counts intervals of the revolutions of an apertured gear wheel with the use of standard types of IR transmitters and receivers on either side thereof that are small components fixed in housings rigidly mounted inside the toy.

This is in contrast to closed-loop type servomotors that utilize a resistance potentiometer as a feedback sensor. The potentiometer wiper arm is a movable part that creates frictional resistance to motor shaft rotation. As such, the present optical counting assembly is advantageous in comparison thereto due to lesser power requirements as there is no frictional resistance created thereby. And further, the optical counting assembly is better able to withstand drop tests as the parts are all stationary and rigidly mounted in the toy versus the movable wiper arm.

In addition, the use of a single motor and single control shaft for operating all the cam mechanisms associated with each of the body parts allows the toy to be very compact and relatively inexpensive when considering the high degree of interactivity with the user that it provides. As there is only a single control shaft, a single small, reversible motor can be utilized. Further, the programmed surfaces of the cam mechanisms are preferably provided on the walls of slots with the cam mechanisms including followers that ride in the slots and that are unbiased such as by springs or the like to any particular position in the slots, such as found in prior toys. In this manner, there is no biasing force which the motor must overcome to provide the camming action between the follower and the slot walls thereby lessening power requirements for the motor and allowing a smaller motor to be utilized.

The toy also preferably includes a lower pivotal foot portion similarly operated by a cam mechanism off of the control shaft. The pivotal foot portion allows the toy to rock back and forth to give the appearance of dancing such as if this motion is caused to be repetitive. As previously discussed, the toy includes sensors, e.g. IR transmitters and receivers, for allowing communication between the toys. For instance, if several of the toys are placed in close proximity, and one detects a sensory input that the controller interprets as instructions to make the toy dance, e.g. four loud, sharp sounds in succession, the motor of the toy will be activated so that cam of the foot portion will be rotated by the control shaft to cause repetitive pivoting of the foot portion, or dancing of the toy. This toy will then signal the other proximate toys via the IR link to begin to dance. Other types of toy-toy interactions are also possible, e.g. conversations between toys, transmitting sickness apparent by sneezing between toys.

The toy herein is also capable of playing games with the user in a highly interactive and intelligent seeming manner. These games are implemented by specific predetermined inputs to the toy by the user that the toy can sense such as a predetermined pattern of the same action done a predetermined number of times or different actions in a specific sequence in response to output from the toy. For example, the toy can be taught to do tricks. Initially, a predetermined trick initiating sensor can be actuated to shift the toy into its trick learning mode. To teach it tricks, the same or another predetermined sensor can be actuated a predetermined number of times when the specific toy output, e.g. a predetermined sound such as a kiss, is generated by the toy. Thereafter, every time the trick initiating sensor is actuated for the trick learning mode and the toy generates the output that is desired to be taught, the same predetermined sensor must be actuated by the user the predetermined number of times which will thereby "teach" the toy to generate the desired output whenever the trick initiating sensor is actuated.

Another game is of the "Simon Says" variety where the toy will provide a predetermined number of instructions for the user to perform in a predetermined pattern, e.g. "pet, tickle, light, sound", which must be then performed with the toy providing a response to each action when done properly. If the user performs the first game pattern successfully, the toy will then continue on to the next pattern which can be the same pattern of actions that were performed in the prior pattern with one more action added thereto. In this manner, the toy herein provides a child with highly intelligent seeming interaction by allowing the child to play interactive games therewith which should keep them interested in playing with the toy for a longer period of time.

These and other advantages are realized with the described interactive plaything. The invention advantages may be best understood from the following detailed description taken in conjunction with the accompanying microfiche appendix, appendix A and the drawings.

BRIEF DESCRIPTION OF THE DRAWINGS

FIGS. **1–7** are various views of a toy in accordance with the present invention showing a body of the toy and various movable body parts thereof;

FIG. **8** is a perspective view of the toy including a hide attached over the body;

FIG. **9** is a perspective view of the toy body showing a foot portion which is separated therefrom;

FIG. **10** is an exploded perspective view of the toy body showing the various internal components thereof;

FIG. **11** is an elevational exploded view of the body showing a front sensor and an audio sensor for the toy;

FIG. **12** is a side elevational view of the interior of the toy body and showing a front face plate and a rear switch actuator broken away from the body;

FIG. **13** is a front elevational view of the toy with the body removed;

FIG. **14** is a view taken along line **14**—**14** of FIG. **13**;

FIG. **15** is a view taken along line **15**—**15** of FIG. **14**;

FIG. **16** is a view taken along line **16**—**16** of FIG. **15**;

FIG. **17** is a view taken along line **17**—**17** of FIG. **15**;

FIG. **18** is an exploded perspective view of the pivotal attachment of the foot portion to a bracket member to which the front switch, a speaker and printed circuit board are attached;

FIG. **19** is a front elevational view of the assembled front switch and speaker to the bracket of FIG. **18**;

FIG. **20** is a side elevational view of the pivotal attachment of the foot portion to the bracket with the front switch and speaker attached thereto;

FIG. **21** is a cross-sectional view taken along line **21**—**21** of FIG. **19** showing the front switch in its actuated position;

FIG. **22** is an elevational view partially in section of an actuator for the rear switch;

FIG. **23** is a view taken along line **23**—**23** of FIG. **15** showing a harness with a motor and the transmission system therefor mounted thereto;

FIG. **24** is a view taken along line **24**—**24** of FIG. **23**;

FIG. **25** is a view taken along line **25**—**25** of FIG. **13** showing cam mechanisms for the eye and mouth assemblies and an IR link and light sensor;

FIG. **26** is a view similar to FIG. **25** with the eye assembly shifted to its closed position;

FIG. **27** is a view similar to FIG. **25** with the mouth assembly shifted to its open position;

FIG. **28** is a view similar to FIG. **27** showing a tongue of the mouth assembly and switch actuator thereof shifted to actuate a tongue switch;

FIG. **29** is a front elevational view partially in section of the tongue switch being actuated;

FIG. **30** is an exploded perspective view of an ear assembly including a pair of pivotal ear shafts and a cam mechanism for pivoting thereof;

FIG. **31** is a view taken along line **31**—**31** of FIG. **14** showing the ear shafts pivoted from raised positions to lowered positions;

FIG. **32** is a cross-sectional view taken along line **32**—**32** of FIG. **31**;

FIG. **33** is a view similar to FIG. **31** with one of the ear shafts raised and one of the ears lowered;

FIG. **34** is a view taken along line **34**—**34** of FIG. **15** showing a cam mechanism for the foot portion;

FIG. **35** is a view taken along line **35**—**35** of FIG. **34** showing the cam operating mechanism for the toy body parts;

FIG. **36** is an exploded perspective view of the cam operating mechanism;

FIG. **37** is an elevational view similar to FIG. **34** showing the cam mechanism for the foot portion operable to tilt the body in a forward direction;

FIG. **38** is a side elevational view of the toy body showing the foot portion tilting the body forwardly;

FIG. **39** is a cross-sectional view taken along line **39**—**39** of FIG. **34** showing an optical counting assembly for the motor;

FIG. **40** is an exploded perspective view of a tilt switch including a housing, a ball actuator, and an intermediate control, spacer and upper contact members;

FIG. **41** is a cross-sectional view showing the ball actuator in a lower chamber of the tilt switch housing;

FIG. **42** is a cross-sectional view similar to FIG. **41** except with the toy upside down showing the ball projecting through the control member and into engagement with the upper contact member;

FIGS. **43** and **44** show a schematic block diagram of the embedded processor circuitry in accordance with the present invention;

FIG. **45** is a schematic diagram of the infrared (IR) transmission circuitry;

FIG. **46** is a schematic diagram of the co-processor and audible speech synthesis circuitry;

FIG. **47** is a schematic diagram of the IR signal filtering and receiving circuitry;

FIG. **48** is a schematic diagram of the sound detection circuitry;

FIG. **49** is a schematic diagram of the optical servo control circuitry for controlling the operation of the motor;

FIG. **50** is a H-bridge circuit for operating the motor in either forward or reverse directions;

FIG. **51** is a schematic diagram of the power control circuitry for switching power to the functional section of the functional blocks identified in FIGS. **43** and **44**;

FIG. **52** is a schematic diagram of the light detection circuitry;

FIGS. **53** and **54** illustrate a program flow diagram for operating the embedded processor design embodiment of FIGS. **43** and **44** in accordance with the invention.

FIGS. **55**–**59** are views of the body parts and associated cam mechanisms with the body parts in predetermined coordinated positions to provide the toy with a sleeping state;

FIGS. **60**–**64** are views of the body parts and associated cam mechanisms in predetermined coordinated positions to provide the toy with a waking state;

FIGS. **65**–**68** are views of the body parts and associated cam mechanisms with the body parts in predetermined coordinated positions to provide the toy with a neutral position; and

FIGS. **69**–**73** are views of the body parts and associated cam mechanisms in predetermined coordinated positions to provide the toy with an excited state.

DETAILED DESCRIPTION OF THE PREFERRED EMBODIMENTS

In FIGS. **1**–**8**, an interactive toy **10** is shown having a number of moving body parts, generally designated **12**, which are precisely controlled and coordinated in their movements in response to external sensed conditions. The precise control and coordination of the movements of the body parts **12** provide a highly life-like toy **10** to provide high levels of interaction with the user to keep them interested in playing with the toy over long periods of time. A preferred form of the toy **10** is available from the assignee herein under the name "Furby"™. The toy body parts **12** are controlled and coordinated in response to predetermined sensory inputs detected by various sensors, generally designated **14**, provided for the toy **10**. In response to predetermined detected conditions, the sensors **14** signal a controller or control circuitry **1000** described hereinafter which controls a drive system **15** for the parts **12** as by activating motor **16** (FIG. **10**) of the drive system **15** to generate the desired coordinated movements of the various body parts **12**. It is preferred that the toy **10** utilize a single, low power reversible electric motor **16** that is able to power the parts **12**

for their life-like movements while providing for acceptable battery life. Further, the controller **1000** includes sound generating circuitry as described herein to make the toy **10** appear to talk in conjunction with the movement of the body parts **12** so as enhance the ability of the toy to provide seemingly intelligent and life-like interaction with the user in that the toy **10** can have different physical and emotional states as associated with different coordinated positions of the body parts **12** and sounds, words and/or exclamations generated by the control circuitry **1000**.

A major advantage provided by the present toy **10** is that it is able to achieve the highly life-like qualities by the precise coordination of movements of its various body parts **12** in conjunction with its auditory capabilities in response to inputs detected by sensors **14** thereof in a compactly sized toy and in a cost-effective manner. More particularly, the toy **10** includes a main body **18** thereof that has a relatively small and compact form and which contains all the circuitry and various linkages and cams for the moving body parts **12** in the interior **19** thereof, as will be described in more detail hereinafter. As shown, the body **18** includes a carapace or housing **20** having a clamshell design including respective substantially mirror image housing halves **22** and **24** of plastic material that are attached together in alignment about longitudinal axis **26** of the toy body **18**. As stated, the housing of the toy **10** has a very compact design and to this end the housing **20** has a preferred dimension between upper end **28** and lower end **30** along longitudinal axis **26** of approximately 4½ inches, and a preferred dimension at its widest portion at the housing lower end **30** laterally transverse to the axis **26** of approximately 3¼ inches. As best seen in FIG. **5**, the housing halves **22** and **24** begin to taper approximately midway between the upper and lower ends **28** and **30** toward one another as they progress upwardly toward the housing upper end **28**. As is apparent, the preferred toy **10** herein has a very compact size so as to allow it to be readily portable which allows children of all ages to carry the toy between rooms and on trips, etc., as may be desired.

The majority of the moving body parts **12** of the toy **10** herein are provided in a front facial area **32** toward the upper end **28** of the toy body **18**. In the facial area **32** there are eye and mouth assemblies **34** and **36**, respectively, as best seen in FIGS. **25–28**, with an ear assembly **38** as shown in FIGS. **30–33** adjacent thereto. The toy **10** also includes a movable foot portion or assembly **40** at the lower end **30** thereof, as best seen in FIGS. **18–20**.

The sensors **14** for the toy **10** will next be generally described. The toy **10** has a front sensor assembly **42** below the facial area **32** thereof as shown in FIGS. **19–21**. A rear sensor assembly **44** is provided on the back side of the toy and can best be seen in FIG. **22**. The mouth or tongue sensor assembly **46** is provided in the area of the mouth assembly **36** and is shown in FIGS. **27–29**. The light sensor and IR link assembly **47** is mounted in the toy body **18** centrally above the eye assembly **34**, as can be seen in FIG. **25**. An audio sensor **48** is mounted to housing half **22**, as can be seen in FIG. **11**. FIGS. **40–42** depict a tilt switch assembly **49** mounted to printed circuit board (PCB) **50** in the toy interior **19**. As previously indicated, the sensors **14** are effective to detect predetermined external conditions and signal the control circuitry **1000** of the toy **10** which then controls activation of motor **16** for driving the body parts **12** for precision controlled and coordinated movements thereof via cam operating mechanism, generally designated **52**, shown in FIGS. **35** and **36**. In the interest of space and power conservation, the toy **10** in its preferred form has a drive system **15** that utilizes only a single reversible motor **16** for driving of the cam operating mechanism **52** which is mounted to a frame or harness **54** in a very compact space in the interior **19** of the housing.

More specifically, the cam operating mechanism **52** including the portion of the frame **54** therefor can include a transverse dimension of slightly greater than 1 inch while still being effective to control the movements of every moving body part assembly **34–40**. The compact nature of the cam operating mechanism **52** is primarily due to the use of a single control shaft **56** which is driven for rotation by the single motor **16** of the drive system **15** herein. Ends of the shaft **56** are fixed in hub portions of cam members that are rotatably mounted to parallel vertical walls **57***a* and **57***b* of the frame **54**, as best seen in FIG. **15**. Rotation of the control shaft **56** causes cam mechanisms, generally designated **58**, associated with the body parts **12** to generate movement thereof in a controlled and coordinated manner, as previously discussed.

In this regard, it is important for the controller **1000** to be able to precisely control and know the position of the shaft **56** when the motor is activated **16**; however, it is desirable to avoid the expense and moving parts of utilizing a closed loop servo mechanism for providing the necessary feedback. The preferred drive system **15** herein instead includes an optical counting assembly **60** which counts intervals of the rotation of a slotted gear wheel **62** in gear train transmission **64** of the drive system **15**. The gear wheel **62** is mounted at the lower end of a common vertical shaft **65** having worm gear **67** formed at its upper end, and is driven for rotation by the upper portion **69***a* of intermediate compound gear **69** which, in turn, is driven for rotation by gear **16***a* on the output shaft of the motor **16** which drives the larger lower portion **69***b* of compound gear **69** for rotation. By incrementally counting slots **66** in the wheel **62** as the wheel **62** is rotated when the motor **16** is activated as the slots **66** pass between an IR transmitter **68** and an IR receiver **70** on either side of the gear wheel **62**, the controller **1000** can receive accurate information regarding the position of the control shaft **56** for precisely controlling the movements of the body parts **12**. Preferably four slots **66** are equally spaced at ninety degree intervals about the wheel **62**. In addition, an initialization switch assembly **72** is provided that is affixed to the frame **54** for the cam operating mechanism **52** via mounting bracket **73** to zero out the count in the control circuitry **1000** on a regular basis when the switch assembly **72** is actuated.

The transmitter **68** is rigidly mounted to PCB **50** beneath flat base portion **57***c* of the frame **54** with the base portion **57***c* including an integral depending sheath portion **57***d* for covering and protecting the IR transmitter element **68**. The IR receiver element **70** is rigidly mounted to frame **54** in box-shaped housing portion **57***e* thereof integrally formed with frame vertical wall **57***a,* as shown in FIG. **39**. In this manner, the optical counting assembly **60** herein is improved over prior feedback mechanisms that require moving parts or impart frictional resistance to motor operation, as the assembly **60** utilizes elements **68** and **70** that are fixed in the body interior **19** and which do not affect the power requirements of motor **16**.

The cam mechanisms **58** associated with each of the body parts **12** each include a cam member and a follower or actuator linkage thereof. More specifically and referencing FIGS. **30–33** and **36**, with respect to the ear assembly **38**, a cam mechanism **74** is provided including a gear cam member **76** having an arcuate slot **78** formed on one side thereof. The slot **78** is defined by slot walls **80** including cam surfaces **80***a* which engage a cam follower **82**, and more specifically, a follower pin projection **84** thereof which rides

in the slot **78** against the cam surfaces **80***a* as the shaft **56** is rotated. The shaft **56** is rotated when the motor **16** is activated via gear train transmission **64** by meshing of worm gear **67** with the peripheral teeth **76***a* of the gear cam member **76** fixed on and for rotation with the control shaft **56**. In the preferred form, the shaft **56** has a square cross-sectioned shape with the gear cam member **76** having a complementary square opening for press-fitting of the cam member **76** thereon. The cam follower **82** has a hook shape in profile with a cut out **86** so as to provide clearance for the shaft **56** extending therethrough with the hook-shaped follower **82** projecting upwardly from the shaft **56** substantially perpendicular to the axis **56***a* thereof. At the upper end of the follower **82** is a rack portion **88** having teeth **90** on either side thereof. Pivotal ear shafts **92** are mounted to a transverse vertical extension portion **94** of the frame **54** via lower annular mounting portions **96** thereof and pinion gears **98** for pivoting of each of the shafts **92**.

The frame extension **94** includes mounting posts **100** projecting rearwardly therefrom and onto which the gears **98** are rotatably mounted. The gears **98** include peripheral teeth **104** and a rearwardly projecting hub portion **106** preferably having a splined external surface thereof. The hub **106** is sized to fit the annular mounting portions **96** of the ear shafts **92** with these annular portions including interior splined surfaces that cooperate with the splines of the hubs **106** so that rotation of the gears **98** will cause pivoting of the ear shafts **92** unless a braking force is applied to the shafts **92**. In this instance, there is sufficient clearance between the mounting portions **96** and the hubs **106** so that the splines thereof allow relative motion therebetween to provide a clutch function for the ear assembly **34**.

To provide limits of the pivotal movement of the ear shafts **92**, a bracket member **108** is affixed to the frame portion **94** and includes arcuate slots **110** on either side therefor for receipt of a pin **112** which projects rearwardly from the bottom of ear shaft annular mounting member **96**. Adjacent the slots **110**, the bracket member **108** includes apertures **114** for receipt of the distal ends of the mounting posts **100**.

With continuing reference to FIGS. **31–33**, control shaft **56** causes the cam follower pin **84** to ride in the slot **78** of the gear cam member **76** which generates vertical up and down movement of the follower member **82** including the rack portion **88** thereof. The rack portion **88** includes an offset wall **114** intermediate the gear teeth **90** on either side thereof so that with the portion **88** riding along the vertical frame extension **94**, the rack portion **88** will be guided by laterally spaced, vertical guide rails **116** thereon for vertical translating movement with the gear portion teeth **90** on either side thereof meshing with the teeth **104** of the gears **98** for causing pivoting of the ear shafts **92**. In this manner, the ear cam mechanism **74** has a rack and pinion type of gearing arrangement to generate a pivoting action of the ear shafts **92** in a plane parallel to the axis of the shaft **56** from up and down translation of the cam follower **82** perpendicular to the shaft axis.

Accordingly, when the follower **82** is in its lower position, the ear shafts **92** will be in a substantially vertical raised position with the pins **112** at the lower end of the bracket arcuate guide slots **110**. As the follower **82** is shifted vertically upward, the ear shafts **92** pivot in a direction opposite to each other toward their lowered position, and reach this position when the pins **112** are at their uppermost end of the bracket guide slots **110**. As the splined connection between the shaft annular portions **96** and pinion hubs **106** allow for relative motion such as when a child grabs an ear during movement thereof, it is possible for a particular shaft **92** to become out of alignment with where the controller **1000** thinks it is located. However, due to the provision of the guide slots **110**, once the ear assembly **38** is instructed by the controller **1000** to travel to one of its raised or lowered position, the splined connection will allow the gear **98** associated with the out of alignment shaft **92** to rotate relative to the portion **96** thereof until the gear **98** stops rotating as the rack portion **88** reaches the end of its travel. Then, subsequent movement away from the end position will occur with the ear shafts **92** in alignment with each other absent a braking force applied thereto.

Both the eye and mouth assemblies **34** and **36** are mounted to a face frame member **118** having openings for the assemblies **34** and **36**, as well as for the light and IR link sensor assembly **48**. The face frame **118** is mounted to the housing **20** in an upper opening **120** thereof formed when the housing halves **22** and **24** are connected via complementary shaped face plate **122** seated in the opening **120**. The frame **118** includes a pair of upper eye openings **124** and a lower mouth opening **126** centered therebelow similar to the face plate **122**. An eye member **128** is provided including a pair of semi-spherical eyeballs **130** joined by connecting portion **132** extending there-between with the eyeballs **130** sized to fit in the eye openings **128** of the frame **118** and pivotally attached thereto via pivot shaft **134**. Thus, the pivot shaft **134** is spaced forwardly and vertically higher than the control shaft **56** and extends parallel thereto. The pivot shaft **134** also mounts an eyelid member **136** which includes one-third spherical eyelids **138** and a central annular bearing portion **140** through which the pivot shaft **134** extends and interconnecting the pair eyelids **138**. With the eye and eyelid members **128** and **136** both pivotally mounted to shaft **134**, the bearing portion **140** will be disposed above the connecting portion **132**.

The mouth assembly **36** includes substantially identical upper and lower mouth portions **152** and **154** in the form of upper and lower halves of a beak that are sized to fit in the mouth opening **126** of the frame **118** and are pivotally attached thereto via pivot shaft **156**. The mouth portions **154** are pivotally mounted on shaft **156** by rear semi-circular boss portions **158** thereof spaced on either side of the mouth portions **154** so as to provide space for a tongue member **160** therebetween. The tongue member **160** includes an intermediate annular bearing portion **162** through which the pivot shaft **156** extends and having a rearwardly extending switch actuator portion **164** so that depressing the tongue **160** pivots the portion **164** for actuating tongue sensor assembly **46**, as described more fully hereinafter. The mouth portions **154** also include upper and lower pairs of oppositely facing hook-shaped coupling portions **166** to allow an associated cam mechanism **58** to cause movement of the mouth portions **154**, as described below.

The cam mechanisms **58** for the eye and mouth assemblies **34** and **36**, respectively, will next be described with reference to FIGS. **25–27** and **36**. The mouth cam assembly **139** includes a disc-shaped cam member **141** adjacent to gear cam member **76** on the control shaft **56** and fixed for rotation therewith. Similar to cam member **76**, cam member **141** includes an arcuate slot **142** formed on one side thereof as defined by slot walls **144**. The mouth cam follower **146** includes a pin **148** projecting therefrom and into the slot **142** for engagement with cam surfaces **144***a* on the slot walls **144**. Accordingly, rotation of the shaft **54** rotates the cam member **141** with the pin **148** riding in the slot **142** thereof to cause the follower **146** to translate in a fore and aft direction. The cam follower **146** projects forwardly from the

shaft **56** substantially perpendicular to the axis thereof and has a window **147** through which shaft **56** extends, and a lower rear extension **149** that fits through slot **151** formed in the initialization switch bracket **73** for guiding translating fore and aft movement of the follower **146**. Toward the forward end of the cam follower **146** are a pair of vertically spaced flexible arcuate arm portions **150** having small pairs of pivot pins portions **152** extending oppositely and laterally from forked distal ends thereof spaced forwardly of the shaft **56** and extending parallel thereto.

The pin portions **152** seat in the hook coupling portions **166** of the mouth portions **154** so that when the cam follower **146** is shifted forwardly with rotation of the disc cam member **141**, the flexible arcuate arms **150** will pivot the mouth portions **154** toward one another to their closed position, and when the follower **146** is shifted rearwardly by rotation of the cam member **141**, the arms **150** will pull the mouth portions for pivoting them away from each other to their open position with the pivoting occurring in a plane perpendicular to the shaft **56**. In addition, the flexible nature of the arms **150** provides enough give so that the mouth portions **154** can be shifted open and closed from the other of their open and closed positions regardless of the position of the follower **146**, such as by a child trying to reach the tongue **160** when the mouth portions **154** are closed.

Continuing with reference to FIGS. **25–27** and FIG. **36**, the eye assembly **34** has cam mechanism **168** associated therewith and which includes a disc-shaped cam member **170** having an arcuate slot **172** formed on one side thereof as defined by slot walls **174**. The cam member **170** is fixed on shaft **56** for rotation therewith and spaced from the cam member **141** along shaft **56** by disc spacer **171**. A cam follower **176** includes a pin **178** projecting therefrom and into the slot **172** for engagement with cam surfaces **174***a* on the slot walls **174**. The cam follower **176** is pivotally mounted to the lower end of the frame vertical extension **94** via pivot pin **180**. Thus, as the control shaft **56** is rotated, the cam member **170** rotates to cause pivoting of the follower **176**. A bearing member **182** is clamped into a recess on upwardly angled main body **176***a* of the follower **176** by a clamping plate **184**, as best seen in FIG. **34**. The follower **176**, and in particular main bearing body **176***a* thereof, projects forwardly and upwardly from the shaft **56** perpendicular to the axis thereof toward the eyelid member **136**.

The bearing **182** is preferably made of a resilient material such as rubber and includes an arcuate portion **182***a* projecting forwardly from the front of the follower **176** and into rolling engagement with the annular surface of the bearing portion **140** of the eyelid member **136** for pivoting thereof about the shaft **134** in a plane perpendicular to the shaft **56** as the cam follower **176** is pivoted with rotation of the cam member **170**. Pivoting of the eyelids **138** over associated eyeballs **130** allows the toy **10** to be shifted between sleeping and waking states in conjunction with other predetermined movements of other body parts **12**, as discussed hereinafter, and also to provide for blinking of the eyes of the toy **10**. The rubber bearing **182** also provides a friction clutch so that there can be a slip between the bearing **182** and eyelid member portion **140** so that the eyelids **138** can be shifted by a child from one of their open and closed positions to the other regardless of the position of the follower **176**.

Thus, the cam mechanisms **58** include followers or actuator linkages operated thereby that provide for arcuate movements of the body parts **12** to more closely simulate the movements of actual body parts. The linkages cause arcuate or pivotal movements of the eyelids **138** and mouth portions **152** and **154** in planes that are substantially parallel to each other with the arcuate or pivotal movement of the ear shafts **92** occurring in a plane that is transverse, and preferably perpendicular, to the planes in which the eyelids and mouth portions pivot.

As previously discussed, the controller **1000** utilizes inputs from the toy sensors **14** for activating the motor **16** to generate rotation of the shaft **56** in a precisely controlled manner for generating correspondingly precisely controlled movements of the toy body parts **12**. The toy includes sensors **14** to detect motion of and along its body, such as by rubbing, petting or depressing on external hide **186** attached about body **18** at predetermined positions thereon, and predetermined auditory and lighting conditions. The hide **186** covers the front and rear sensor actuators **188** and **214**, and apertures **48***a* in the housing half **22** for the audio sensor **48**. The hide **186** includes ear portions **186***a* and **186***b* for fitting over the ear shafts **92** and is sewn to the face plate **122** about its periphery which is, in turn, glued or otherwise attached to the housing **20** in the face opening **120** thereof. The bottom of the hide **186** includes looped material through which a plastic draw member **187** is inserted and tightly drawn for seating in lower annular groove **189** formed around the bottom of the housing **20**.

More specifically, the front sensor assembly **42** includes an apertured disc actuator **188** having an upper arm portion **190** attached to speaker grill **192**, as best seen in FIGS. **18–21**. The speaker grill **192** and speaker **194** are fixed to a bracket **196** which, in turn, is rigidly mounted to the toy body **18** by way of laterally aligned internal bosses **198** on either housing half **22** and **24**. The disc actuator **188** is preferably of a plastic material and the arm portion **190** thereof spaces the disc **188** forwardly of the speaker grill **192** and allows the disc **188** to be flexibly and resiliently shifted or pushed back toward the speaker grill **192**.

Contacts **200** and **202** of a leaf spring switch are mounted between the disc actuator **188** and the speaker grill **192** with contact strip **200** fixed at its upper end between the arm **190** and the grill **192** and depending down to an abutment portion **204** projecting from the rear of the disc actuator **188**, and in alignment with contact strip **202** extending laterally across the lower portion of the speaker grill **192** and affixed thereto. Thus, depressing the disc actuator **188** as by pushing or rubbing on the hide **186** thereover causes the abutment portion **204** to engage the free end of the contact strip **200** for resiliently shifting it into engagement with strip **202** which signals the processor **1000**. As the speaker grill **192** is mounted in a lower opening **206** formed when the housing halves **22** and **24** are connected at the front of the body **18** centered below the opening **120** of the toy facial area, actuating the front sensor assembly **22** can simulate tickling of the toy **10** in its belly region.

Referring to FIG. **22**, the rear sensor assembly **44** includes a microswitch **208** mounted to circuit board **50** and having a plunger **210** projecting rearwardly therefrom, as is known. A rear switch actuator **212** is mounted in rear slot opening **214** formed when the housing halves **22** and **24** are connected. The actuator **212** has an elongate slightly arcuate shape to conform to the curvature of the rear of the toy body **18** and is captured in the body interior **19** at its upper end by lateral tabs **216** for pivoting thereabout and including a lower plunger engaging portion **216** thereof so that when the actuator **212** is pivoted as by pushing or rubbing on the hide **186** thereover, it will depress the plunger **210** causing the switch **208** to signal the processor **1000**. With the position of the rear sensor assembly **44** at the back side of the toy body **18**, actuation of the switch **208** can simulate petting of the toy **10** along its back.

Referring next to FIGS. **40–42**, the tilt switch **49** will be described. As shown, the tilt switch **49** is mounted to the circuit board **50** and includes a generally cylindrical housing **218** having a bottom number **220** with a central opening **222** therein. An actuator ball **224** is disposed in the housing **218** and has a diameter sized so that when the toy **10** is at rest on a horizontal surface, a lower portion of the ball will fit through the opening **222**. Thus, the opening **222** provides a seat for the ball **224** so that it remains at rest in a lower chamber **226** of the housing as defined by the bottom member **220** and an intermediate contact member **228**. The contact member **228** has a hexagonal hole **230** formed therein which is larger then lower opening **222** so that the ball **224** normally is spaced from the edges of the intermediate contact member **228** about the hole **230**. However, when the toy **10** is tilted such as through a predetermined angular range, the ball **224** will roll from the seat provided by the bottom member **220** and into engagement with the intermediate member **228** which signals the controller **1000**. Shaking the toy **10** can also unseat the ball **224** sufficiently for it to make contact with member **228**. Further, if the toy **10** is tilted sufficiently far so that its upper end **28** is below its lower end **30**, the ball **224** will fit through the opening **230** with a portion thereof extending into an upper chamber **231** defined between the intermediate contact member **228** and an upper contact member **232** bounded by ring spacer **233**. With the toy tilted so that it is upside down, the ball **224** can project sufficiently far through the opening **230** so that it is in engagement with the contact member **232** which will provide another signal to the controller **1000**. The housing **218** is closed at its top by an upper cap member **234**.

The audio sensor **48** is in the form of a microphone **236** mounted in cylindrical portion **238** formed on the interior of housing half **22** and projecting laterally therein, as best seen in FIG. **11**. The light sensor and IR link assembly **47** is mounted behind opaque panel **240** attached to the face frame **118** between the eye openings **124** thereof. Referring to FIG. **25**, the light sensor portion **242** of the assembly **47** is mounted between an IR transmitter elements **244** and an IR receiver element **246** on either side thereof. Together the element **244** and **246** form the IR link to allow communication between a plurality of toys **10**.

Referring to FIGS. **27–29**, the tongue sensor assembly **46** is illustrated. As previously discussed, the tongue sensor assembly **46** includes a tongue member **160** that has an actuator portion **164** that projects rearwardly from annular portion **162** which pivots about pivot shaft **156**. The switch actuator portion **164** extends further in the rearward direction than the forward tongue portion **160** and is designed so that normally the switch actuator portion **164** is in its lower position and the tongue portion **160** is raised. A microswitch **248** is mounted to frame **54** and includes a pivotal member **250** projecting therefrom which is disposed over a lower portion **164***a* of the switch actuator **164**. Accordingly, depressing the tongue portion **160** pivots the switch actuator **164**, and in particular portion **164***a* thereof upwardly into engagement with the switch member **250** so as to pivot it upwardly for actuating the switch **248** and signalling the controller **1000**. As the sensor assembly **46** is disposed in the mouth area, activation of the switch **248** can simulate feeding the toy **10**.

The toy **10** also includes a foot portion **40** that is movable relative to the toy body **18** which allows it to rock back and forth and, if done repetitively, give the appearance that the toy **10** is dancing. The lower foot portion **40** includes battery compartment **252** which is secured to base member **254** which has upstanding mounting members **256** laterally spaced from each other in front of the battery compartment. The bracket **196** is attached to the foot portion **40** via pins **258** for pivotally pinning depending side portions **260** of the bracket member **196** to the base mounting members **256** for allowing pivoting of the foot portion **40** relative to the remainder of the toy **10**.

Cam mechanism **258** is associated with the foot portion **40**. Referring to FIGS. **34** and **37**, the cam mechanism **258** includes an eccentric member **260** of the gear cam member **76** on the side opposite that having the arcuate slot **78** thereon. A cam follower **262** is biased upwardly by spring **264** so as to project from a substantially cylindrical housing **266** therefor. The spring **264** is seated at its lower end on top surface **252***a* of the battery compartment. The housing **266** projects through aligned openings of the printed circuit board **50** and the frame **54**. Thus, when the control shaft **56** is rotated, the eccentric member **260** will come into camming engagement with the follower **262** to depress the follower **262** into the housing **266** against the bias of the spring **264** causing the body **18** of the toy **10** less the foot portion **40** thereof to pivot upwardly and forwardly, as can be seen in FIGS. **37** and **38**. For guiding the pivoting movement, the base **254** includes a rear wall **270** having vertical recessed guide tracks **272** formed therein, as best seen in FIGS. **15** and **38**. Each of the housing halves **22** and **24** include tabs **274** at the bottom and rear thereof which ride in tracks **272** and are limited by stops **276** formed on the wall **270** at the upper end of the tracks **272** so as to define the forwardmost pivoted position of the toy body **18** relative to the foot portion **40**.

As previously stated, the cam surfaces of the cam mechanisms **58** herein are provided with precise predetermined shapes which is coordinated with the programming of the processor **1000** so that at every point of the cam surfaces, the processor **1000** knows the position of the moving body parts **14** associated therewith. In this manner, the toy **10** can be provided with a number of different expressions to simulate different predetermined physical and emotional states. For instance, when the shaft **56** is in its 7 o'clock position as looking down the shaft **56** in a direction from cam gear wheel **76** to the other end of the shaft and disc cam member **170** as in FIGS. **55–59**, the toy **10** will be in its sleeping state with its eyelids and mouth closed and its ears down and the body **18** leaning forward. In the waking position depicted in FIGS. **60–64**, the shaft is somewhere between the 11 and 12 o'clock positions and the eyelids are half open, the mouth is open and the ears are up at a forty-five degree position with the body tipped downwardly.

A neutral position is provided as shown in FIGS. **65–68** which is the 1 o'clock position of the control shaft **56** where the eyes are open, the mouth is closed and the ears are up at a forty-five degree angle. In addition, the disc cam member **141** includes a projection **266** on its periphery so that at the neutral position, the projection **266** actuates a leaf spring switch **268** of the initialization switch assembly **72** so as to zero the count in the control circuitry. **1000** of the position of the motor **16**. In FIGS. **69–73** which corresponds to approximately the two o'clock to three o'clock position of the shaft **54**, the toy **10** is provided with an excited state where the eyelids are open and the mouth is pivoted open and closed and the ears are up.

An additional advantage provided by the neutral position is that the mouth is closed thereat and open on either side thereof. Despite the fact that the toy **10** herein preferably employs a reversible motor **16**, it is not desirable to have to undergo reverse rotations of the shaft **56** every time the toy generates a two syllable sound or word for power conser-

vation purposes. In this regard, because the mouth is open on either side of the neutral position, a two syllable word can be generated by rotating the shaft **56** in one direction so as to sweep the neutral position so that the mouth opens, closes and opens again for forming the two syllable sound/word without necessitating reversal of the motor **16** for reverse rotation of the shaft **56** and the attendant power consumption thereby.

However, the fact that the motor **16** is reversible does provide the toy **10** herein with much more life-like movement of its body parts **12** as particular movements can be repeated in back and forth directions as precisely controlled by the processor **1000** in cooperation with the programmed cam surfaces causing the shaft **56** to move to predetermined positions thereof where it knows exactly what types of movements the parts will undertake thereat. Thus, if it is desired to make a part undergo back and forth movements, the controller can instruct the shaft **56** to rotate in both directions through an active region on the associated cam in both directions for full back and forth movement of the part; or, the controller can instruct the shaft **56** to go to another active region on the cam that does not make the part go through its entire range of movement and instead only go through a portion of its full range, or to some predetermined position in the full range of motion active region where the shaft can be rotated in both directions to provide specific ranges of back and forth part movement within the part's full range of motion. In this manner, the parts **12** herein can be made to undergo non-cyclic types of movements which do not simply repeat upon rotating the shaft **56** in a single direction such as found in many prior toys.

For programming of the cam surfaces so as to provide the body parts **12** with highly synchronized and coordinated relative movements, modeling of the toy's different states based on puppeteering actions required to achieve these positions of body parts can be utilized. Puppeteers use a resting position from which they generate their hand movements to make corresponding puppet parts move and progressions of such movements. Accordingly, for generating toy movements, the neutral position shown in FIGS. **65–68** of the shaft **56** and cam members **76**, **141** and **170** is utilized as a starting point in programming of the movements of the parts **12** similar to the resting position puppeteers use; and because the neutral position is generally the position that is most regularly reached and/or traversed during movements of the toy body parts **12**, the cam **141** is designed so that at the neutral position, the projection **266** thereof actuates the leaf spring switch **268** (FIG. **66**) to zero out the count for the motor **16** on a regular basis. In this manner, the position of the shaft **56** will not become too out of synchronization with the position the controller **1000** thinks it is at when it is driven by the motor **16** and gear train transmission **64** as controlled by processor **1000** before the count in the processor is zeroed to provide for recurrent and regular calibration of the position of the shaft **56**.

From the neutral position, the controller **1000** knows exactly how far the shaft **56** has to be rotated and in which direction to cause certain coordinated movements of the parts, and precise movements of individual parts. In this regard, the cams are provided with cam surfaces that have active regions and inactive regions so that in the active regions, the part associated with the particular cam is undergoing movement, and in the inactive region the part is stationary.

Thus, for moving the eyelid member **136** through its entire range of motion, the shaft **56** is rotated clockwise from between the 7:00 position of FIG. **55** at point **300** along the cam surfaces **174***a* to the neutral 1:00 position of FIG. **65** at point **302** of the cam surfaces **174***a* so that the section between points **300** and **302** defines an active region of the cam surfaces **174***a*. Another active region is provided between point **302** at the neutral position and point **304** (FIG. **69**) at approximately the position corresponding to the excited state where the walls **174** curve toward central axis of the cam **170** for providing a slight closing of the raised eyelids and then a reopening thereof to provide a fluttering effect as during the excited state of the toy.

The inactive region of the cam surfaces **174***a* is provided on a section of the walls **174** that maintains a substantially constant radius from the axis of the cam **170** such as between points **304** and **306** as with the other cams **76** and **141** as will be described herein so that there is little or no relative movement of the follower pin **178** relative to the cam axis as the pin **178** moves through the slot **172** between points **304** and **306**.

Similarly, the cam surfaces **144***a* of the mouth cam member **141** have an inactive region between points **308** and **310** where the walls **144** defining cam slot **142** maintain a substantially constant radius from the central axis of the cam **141**. As shown in FIG. **56**, at the 7:00 position where the toy **10** is in its sleeping state, the pin **148** of follower **146** is midway between points **308** and **310** in slot **142** with the mouth closed.

A first active region is provided along a predetermined section of the slot walls **144** between points **308** and **312** with the walls **144** slightly curving in toward the cam axis so that rotation of shaft **56** to approximately the 10:00 position shown in FIG. **61**A causes pin **148** to move into this active region to make the mouth start to open. Continuing clockwise rotation of the shaft **56** with the pin **148** moving toward point **312** fully opens the mouth (FIG. **61**B), and then as the walls **144** curve away from the cam axis, the mouth begins to close until it fully closes with the pin **148** at point **312** (FIG. **66**). This corresponds to the neutral position with peripheral projection **266** on cam **141** actuating switch **168**. A second active region is mirror image to the first active region between points **310** and **312** along slot walls **144** so that continued clockwise rotation of the shaft **56** past the 1:00 neutral position opens and then closes the mouth, as shown in FIGS. **70** and **71**. As previously described, the symmetry of the active regions about the neutral position allows the mouth to form two syllables by moving from open to closed to open with a sweep of the neutral position and rotation of the shaft **56** in only one direction.

The cam member **76** for moving the ears has an active region between points **314** and **316** along slot walls **80** to provide the full range of motion of the ear shafts **92**. In FIG. **57**, the pin **84** is at point **314** with the ear shafts **92** in their lowermost, horizontally extending position (FIG. **58**). Clockwise rotation of the shaft **56** causes the pin **84** to move in slot **78** toward point **316** with the pin **84** moving closer to the central axis of the cam **76** drawing the follower **82** down to begin raising the ear shafts **92** until they reach their raised, vertically extending position, with this progression being illustrated in FIGS. **62**, **63**, **67**, **68**, **72** and **73**. At point **316**, the pin **84** is at its closest position to cam axis. Continued clockwise rotation of the shaft **56** past the 2:00 position and toward point **318** will cause the pin **84** in slot **78** to move toward point **318** away from cam axis until the ear shafts **92** are again at their lowermost position. The inactive region along slot walls **80** is between points **314** and **318** where they maintain a substantially constant radius from cam axis with the ears lowered and extending horizontally.

An embodiment of an embedded processor circuit for the interactive plaything is identified in FIGS. **43** and **44** as

reference numeral **1000**. FIGS. **43** and **44** show a schematic block diagram of the embedded processor circuitry in accordance with the present invention. As depicted, an information processor **1002** is provided as an 8-bit reduced instruction set computer (RISC) controller, herein the SunPlus SPC81A which is a CMOS integrated circuit providing the RISC processor with an 80 K byte program/data read only memory (ROM). The information processor **1002** provides various functional controls facilitated with on board static random access memory (SRAM), a timer/counter, input and output ports (I/O) as well as an audio current mode digital to analog converter (DAC). The two 8-bit current output DACs may also be used as output ports for generating signals for controlling various aspects of the circuitry **1000** as discussed further below. Other features provided by the SPC81A processor include 20 general I/O pins, four (4) interrupt sources, a key wake up function, and a clock stop mode for power saving which is employed to minimize the current draw from the batteries, BT1–BT4, herein four (4) type "AA" batteries used in the described interactive plaything.

The information processor **1002** is designed to work with a co-processor described below, which is provided for speech and infrared communications capabilities. FIG. **45** shows a schematic diagram of the infrared (IR) transmission circuitry. FIG. **46** shows a schematic diagram of the co-processor and audible speech synthesis circuitry. As shown, an infrared (IR) transmission block **1004** provides circuitry under control of a speech processing block **1006** which is coupled to receive information from the processor **1002** via four (4) data lines D0–D3. FIG. **47** shows a schematic diagram of the IR signal filtering and receiving circuitry. An infrared receive circuit block **1008** is coupled to the information processor **1002** for receiving infrared signals from the transmit circuitry **1004** of another interactive toy device as described herein. FIG. **48** shows a schematic diagram of the sound detection circuitry. A sound detection block **1010** is used to allow the information processor **1002** to receive audible information as sensory inputs from the child which is interacting with the interactive plaything. FIG. **49** shows a schematic diagram of the optical servo control circuitry for controlling the operation of the motor **16**. Optical control circuitry **1012** is used with the motor control circuitry **1014**, discussed below, to provide an electronic motor control interface for controlling the position and direction of the electric motor **1100**. FIG. **50** shows a H-bridge circuit for operating the motor in either forward or reverse directions. A power control block **1016** is used to regulate the battery power to the processor CPU, nonvolatile memory (EEPROM) and other functional components of the circuit **1000**. FIG. **51** shows a schematic diagram of the power control **16** circuitry for switching power to the functional section of the functional blocks identified in FIGS. **43** and **44**. Additionally, the power control block **1016** provides for switching of the power to various functional components through the use of control via the information processor **1002**. FIG. **52** shows a schematic diagram of the light detection circuitry. A light detection block **1018** is provided for sensory input to the information processor **1002** through the use of a cadmium sulfide cell in an oscillator circuit for generating a varying oscillatory signal observed by the information processor **1002** as proportional to the amount of ambient light

With reference to FIGS. **43** and **44**, various other sensory inputs provide a plurality of sensory inputs coupled to the information processor **1002** allowing the interactive plaything to be responsive to its environment and sensory signals from the child. A tilt/invert sensor **1020** is provided to facilitate single pull double throw switching with a captured conductive metal ball **224** allowing the unswitched CPU voltage to be provided at either of two input ports indicating tilt and inversion of the plaything respectively, as discussed further below. Various other sensory inputs of the described embodiment are provided as push button switches, although pressure transducers and the like may also be provided for sensory input. A reset switch **1022** is connected to the reset pin of the processor **1002** for shorting a charged capacitance, herein 0.1 μF which is charged via a pull up resistor to provide the reset signal to the SunPlus processor **1002** for initializing operations of the processor in the software. A feed switch **1024** is provided as a momentary push button controlled by the tongue of the plaything, which is multiplexed with the audio ADC provided as a switch-select allowing the processor **1002** to multiplex the feed input with the inversion switch **1020**. To this end, resistors **1026** and **1028** pull down the inputs to the tilt and feed/invert I/O ports of the processor **1002**, but either the tilt/invert switch **1020** or the feed switch **1024** may be used to pull up an input to the processor **1002**. Additional momentary switches are provided for the front and back sensors of the plaything respectively as push buttons **1032** and **1034**. A motor calibration switch is provided as switch **1036**.

The interactive plaything as described includes the electric motor block **1014** which is coupled to at least one actuator linkage coupled for moving a plurality of movable members for kinetic interaction with the child in order to convey information about the operational status of the plaything to the child. As discussed, each of the movable members **12** is mechanically interconnected by at least one actuator linkage. The motor interface described below, an optical servo control **1012**, is provided between the information processor **1002** and the motor control block **1014** for controlling the at least one actuator linkage with the information processor **1002**. As described, the plurality of sensory inputs, i.e., switches **1020**, **1024**, **1032**, **1034**, and the audio, light, and infrared blocks, are coupled to the information processor **1002** for receiving corresponding sensory signals. A computer program discussed below in connection with FIGS. **53** and **54** illustrating a program flow diagram for operating the embedded processor design embodiment of FIGS. **43** and **44** facilitates processing of the sensory signals for operating the at least one actuator linkage responsive to the sensory signals from the child or the environment of the interactive plaything. Accordingly, a plurality of operational modes of the plaything is provided by the computer program with respect to the actuator linkage operation and corresponding sensory signal processing for controlling the at least one actuator linkage to generate kinetic interaction with the child with the plurality of movable members corresponding to each of the operational modes of the plaything which provides interactive rudimentary artificial intelligence for the interactive plaything. As discussed, the interactive plaything includes a doll-plush toy or the like having movable body parts **12** with one or more of the body parts of the doll being controlled by the plurality of movable members for interacting with the child in a life-like manner.

FIG. **45** shows the circuitry employed in the infrared transmission block **1004**. The IR-TX output port of the information processor **1002** is capacitively coupled to a switching transistor **1044** having a voltage drop across its emitter base junction defined by a diode **1046**. The data line from the port of the information processor **1002** is capacitively coupled via a capacitor **1048**. An infrared LED, diode **1040**, EL-1L7, is switched with transistor **1042** which is

turned on with the switching transistor **1044** in order to minimize current draw from the data port of the information processor **1002**. The infrared transmission with the LED **1040** is programmed using the information processor according to a pulse width modulated (PWM) signal protocol for communicating information from the information processor **1002**. The infrared signals generated from the LED **1040** may be coupled to the infrared receive block **1008** described below, or to another device in communication with the information processor **1002**. To this end, the infrared transmission block **1004** may be used for signal coupling to another computerized device, a personal computer, a computer network, the internet, or any other programmable computer interface.

FIG. **46** shows the speech block **1006** which employs a co-processor **1050**, herein a Texas Instruments speech synthesis processor, TSP50C04, which incorporates a built-in microprocessor allowing music and sound effects as well as speech and system control functions. As discussed further below, the co-processor **1050** controls audio functions as well as the infrared transmission circuitry discussed above in connection with FIG. **45**, allowing for co-processor control of infrared transmission such that the information processor **1002** works with its co-processor **1050** for infrared communications. The Texas Instruments TSP50C04 processor **1050** provides a high performance linear predictive coding (LPC) 12 bit synthesizer with an 8 bit microprocessor which is coupled via data lines D**0**–D**3** with clear to send handshaking signal CTS to the information processor **1002**. The interface between the speech synthesis processor, co-processor **1050**, and the information processor **1002** is disclosed, e.g., in Texas Instruments U.S. Pat. No. 4,516,260 to Breedlove et al. for "Electronic Learning Aid or Game Having Synthesized Speech" issued May 7, 1985, which discloses an LPC speech synthesizer in communication with a microprocessor controller means for obtaining speech data from a memory using the control means to provide data to the LPC synthesizer circuit, as provided by the information processor **1002** and the co-processor **1050** herein. Additionally, the co-processor **1050** includes a digital to analog converter (DAC) capable of driving an audio speaker from the 10 bit DAC for voice or music reproduction. Thus, an audio speaker **1052** is provided as a 32 ohm speaker driven by the DAC output pins of the Texas Instruments processor **1050**. Accordingly, the information processor **1002** programs in accordance with the program flow diagram discussed below, and communicates with the co-processor **1050** for generating LPC speech output at the speaker **1052**.

The infrared receive block **1008** is detailed in FIG. **47** which includes circuitry for filtering, amplification, and signal level detection facilitating signal discrimination for use in infrared signal reception at the information processor via a port data pin, IR-RX, of the information processor **1002**. The circuitry for infrared signal reception **1008** includes filtering circuitry **1054** indicated in dashed lines, which includes a transistor **1056** providing a high pass filtering (HPF) function for blocking 60 Hz and the 120 Hz harmonic to keep out ambient light to avoid false triggering of the infrared receive block **1008**. Accordingly, the transistor **1056** may be turned on using a phototransistor **1058** herein WPTS310, in a circuit providing low gain at low frequencies and high gain at high frequencies to discriminate infrared transmissions from the infrared transmission block **1004** or the like. A gain stage is provided with an operational amplifier **1060**, herein a LM324, in a non-inverting gain configuration with a 1 megohm and 10 K ohm resistor providing a gain of approximately 101 theoretical. The output of the gain stage from op amp **1060** introduces an amplified signal which is capacitively coupled to a comparator stage in which another op amp **1062**, also provided as an LM324, which is configured as a comparator with a diode voltage drop across a diode **1064** between a voltage divider network provided between VCC and ground coupled to the inverting side of the op amp **1062** via a 100 K ohm resistor **1066**. The non-inverting side of the op amp **1062**, which provided in the open loop gain configuration provide a sufficiently large gain to provide a virtual ground at the non-inverting input, virtual ground (VG) **1068**, the non-inverting put being capacitively coupled to ground effectively providing a zero voltage input to the comparator stage of the infrared receive block **1008**. The comparator output of the op amp **1062** is provided as the data signal IR-RX, to the information processor **1002** for measurement of the incoming PWM infrared data signal. The signal received over the IR-RX port data input is also measured for voltage, frequency, and temperature shifts in order to allow the information processor **1002** to compensate for the co-processor variations of the co-processor **1050**. Thus an inexpensive yet robust compensation scheme is provided between the processors for changes associated with voltage frequency and temperature or the like.

FIG. **48** is a schematic diagram of the circuitry employed in the sound detection block **1010**. The sound detection circuitry employs a microphone **1070** coupled via a filtering stage and a one-shot circuit for detecting high frequency audible noises such as clapping or the like. The high frequency filtering (HPF) which is sensitive to abrupt sounds is provided with an op amp **1072**, LM324, having resistive and capacitive feedback loop provided by a resistor **1074** and capacitor **1076** for high frequency filtering, the microphone **1070** being capacitively coupled by a capacitor **1078**. The output of the HPF op amp **1072** is capacitively coupled with a capacitor **1080** to the one-shot stage described below. Additionally, a feedback resistor **1082** provides feedback to the non-inverting input to op amp **1072**, which is also connected to virtual ground **1068**, to set the sensitivity to the one-shot by varying the voltage presented to an op amp **1084** configured for one-shot monostable operation with a voltage drop provided across diode **1086** between the inverting and non-inverting inputs of the op amp **1084**. A feedback resistor **1088** and capacitor **1090** are coupled to the non-inverting side of the op amp **1084** with a shunt resistor **1092** establishing a normal low output (SND) from the sound detection circuitry, which is coupled to the information processor **1002** for facilitating the sound detection.

The optical servo control circuitry **1012** is shown in FIG. **49** employing a slotted wheel optical obstruction **62** shown as a dashed box between the light transmission and reception portions of the circuitry described herein. A LED control signal is sent from the information processor **1002** to a buffered inverter **1044**, inverter logic 74HC14 which has hysteresis and provides current buffering to minimize the current drain off the output data pins of the information processor **1002**. The inverter **1044** drives a 1 K ohm resistor **1096** for current limiting an infrared LED **1098**, an EL-1L7, which is powered from the battery voltage (VBATT) for generating an infrared light source for use with the slotted gear obstructions. A phototransistor **1100**, ST-23G, is used as an infrared photo detector for generating a light pulse count signal coupled via a resistor **1102** to an inverter **1104** which is followed by a second buffered inverter **1106**, also 74HC14, which provides the signal output through a resistor **1108**. The hysteresis provided by inverters **1104** and **1106**

facilitate an automatic resetting of the circuit to avoid needlessly using battery power, providing a normally low count output signal while the motor is at rest.

The motor control circuitry **1014** is shown in FIG. **50** which includes a H-bridge circuit for operating the motor **1110** in either of its forward or reverse directions. The motor **1110** is a Mabuchi motor Model No. SU-020RA-09170 having a three volt nominal operating voltage, drawing approximately 180 milliamps. The H-bridge circuit facilitates a first forward direction and a second reverse direction provided at data output pins D6 and D7 respectively of the information processor **1002**. The first forward direction provides a signal to a switching transistor **1112** which turns on transistors **1114** and **1116** to draw current through the motor **1110** to power the motor with the VBATT voltage drawing current in a first current path through the motor **1110**. The second reverse direction provides a signal to a switching transistor **1118** which turns on transistors **1120** and **1122** causing current to flow through the motor **1110** in a second direction in reverse to that of the first direction. A diode **1124** is provided between the base of transistor **1118** and the collector of transistor **1114** in order to prevent a condition in which both the forward and reverse directions are energized, which of course would be an erroneous state. Also shown in the control circuit **1014**, the VBATT signal is filtered with a 100 μF capacitor, capacitor **1126**, which filters the spurious signals generated by the switching of the motor **1110**.

The power control block **1116** as shown in FIG. **51** is provided to present appropriate voltage levels to the memory, microprocessor, and various other control circuitry with a switched VCC potential. As shown, the battery voltage is provided as arranging between 3.6 to 6.4 volts which undergoes two diode voltage drops at diode **1128** and diode **1130** to present voltage to the electrically programmable read only memory (EEPROM) **1030** which provides a 1 kilobit non-volatile memory for data storage with a 93LC46 type EEROM which operates between 2.4 to 5.5 volts. The voltage to the CPU, VCPU, is current limited at approximately 6 milliamps and filtered with a capacitor **1132** to ensure proper recreation of the microprocessor and logic circuitry. The power control output of the information processor **1002** is buffered and inverted with a logical inverter **1138** also provided as a 74HC14 which drives a switching transistor **1136** to switch the VCC voltage, provided as being current limited to 10 milliamps and filtered with a capacitor **1134**. Accordingly, the EEPWR and the CPU are provided with unswitched filtered voltage levels, while the VCC is switched to provide for cut off of power to various portions of the circuitry for minimizing current draw on the batteries and extending the life of the batteries.

The light detection circuitry **1018** shown in FIG. **52** is also controlled with the power control data output of the information processor **1002** which turns on an oscillator circuit which incorporates a cadmium sulfide, CdS LDR, photoconductive cell provided as a resistive element in a feedback loop along with a resistor **1142** provided in parallel to an inverter **1144**, a 74HC14, which oscillates in the range of 480 Hz to 330 kHz used to generate a count relative to the illumination impinging on the photoconductive cell **1140**. A feedback resistor **1146** and an inverter **1148** are provided to control the operation of the oscillator output L-OUT. The light detection output provides a count to the information processor **1002**, in the range of E3 to 03 hexadecimal. The cadmium sulfide cell **1140** in the feedback loop of the oscillator circuit provides the oscillating signal as being proportional to the visible light. The cadmium sulfide cell **1140** is provided in the embodiment as Kondo Electric Model No. KE10720 and provides a sintering film fabrication by which the photoconductive layer provides a highly sensitive variable resistance. Accordingly, the light detection circuitry **1018** facilitates sensory input of the relative ambient light available for processing with the information processor **1002**.

The software associated with the above-described light detector circuitry **1018** provides a response much as that of the human eye by obtaining average light readings of the oscillatory output to make a determination of the ambient light of the surrounding environment. Upon initial power up a short sample is obtained to define an ambient light reading of the oscillatory output, and upon further operation, a ten second moving average is then provided as an average sample of the output of the light detection circuitry **1018**. The moving average is used to determine if the light level is changing relative to, e.g., a lighter or darker ambient light environment. A timer is also set in software such that complete covering of the cell **1140** causes a speech output from the synthesizer co-processor **1050** announcing that it is dark. The ten second moving average thereby provides an intelligent response from the cell **1140** such that when it is uncovered and allowed to be exposed to visible light, a response is not provided by the plaything **10** but rather the ambient light reading updates according to the ten second moving average software protocol. Thus, a change from a dark state back to a previous ambient light state does not invoke a vocal response. Additionally, the moving average as implemented in software and as described herein provides an extended dynamic range for the overall spectrum from light to dark determination of the environment. This allows the light detector circuit **1018** to operate over a wide range of ambient light environments.

FIGS. **53** and **54** illustrate the program flow diagram of the software included in the microfiche appendix to the application, which provides for the operating of the embedded processor circuitry of FIGS. **43** and **44** described above. The program flow diagram **1200** at step **1150** the embedded processor circuitry **1000** is reset or a wake signal is detected from the invert sensor **1020**, at which point the software clears the RAM on the information processor **1002** at step **1152**. Program flow proceeds with an initialization of the I/O data ports of the embedded processor circuitry at step **1154**. System diagnostics are executed at step **1156** and calibration of the system is provided at step **1158**. The initialization, diagnostics, and calibration routines are executed prior to the normal run mode of the circuitry **1000**. At initialization the preset motor speed assumes a mid-battery life, setting the pulse width such that the motor will not be running at its maximum six volts which make damage to the motor. The information processor **1002** then determines the appropriate pulse width which should be provided for the corresponding battery voltage.

The wake up routines continue at step **1160** which determines whether the program **1200** is executing a cold boot, i.e., the first time upon which the circuit **1000** is powered up, and if decision step **1160** determines that this is a cold boot, special initialization of the system is executed at this time. At step **1162**, the non-volatile EEPROM **1030**, 93LC46, is cleared and a new name is chosen from a look up table which contains 24 different names for the interactive plaything. Additionally, upon a cold boot, step **1166** allows the plaything to choose its voice with the information processor which is also provided for in software using a voice table as a look up table which selects the voice upon initialization. Where it is determined that the cold boot has previously

been executed and that decision step **1160** indicates the program is presently not undergoing a cold boot, step **1168** determines the age of the plaything which is provided with at least four different age levels in the program **1200**. Step **1170** then continues with the wake up routines and the program **1200** is placed in its idle state at step **1172** which provides for a Time Slice Task Master (TSTM) which allows for polling of the various I/O ports and sensory inputs while the program **1200** is idle.

FIG. **54** illustrates the Time Slice Task Master which facilitates a number of software functions for the interactive plaything. The sensors are polled at a scanned sensor step **1176** which is periodically checked by the TSTM **1174**. Motor and speech tables are provided through a routine at step **1188** which provides for a number of levels of hierarchal cables which are used to patch together words in the case of programming of the speech synthesizer, or complex motor movement functions in the case of motor operation via the motor tables. In patching words and sounds together, a "say" table may be employed in which the table provides for a series of data bytes which are used to pronounce particular sounds or words. For instance, the first byte of the say table would include the speed of the speech, in which changing speed would result in changing the pitch of the speech generated. A second byte from the say table may be used to set the pitch without changing the speed to provide for voice inflections and the like. The bytes following would include the voice data used in vocalizing the sounds with the LPC speech synthesizer. The table ends with a end of table notation, herein "FF" hexadecimal. Similarly, motor cables would include data bytes, e.g., wherein the first byte would define a speed for the motor being proportional to the data entry and a second byte may be employed for pausing the motor a "0" hexadecimal entry. The data bytes following would define the motor movement and an end of table character "FF" hexadecimal is again employed. Accordingly, the motor tables are used to patch predetermined motor movements together. A second level of speech and motor tables are also defined by macro tables providing a second level of motor and speech programming in which several complex operations may be joined together as a macro routine. An additional third level table is provided as a sensor table coupled to the macro tables providing, e.g., responses to sensor detection. The tables are defined in an include file which is included in the microfiche appendix to the application. The programming with speech and motor tables facilitates the use of cost effective hardware in combination with the program **1200** to facilitate complex speech and motor operations with the inactive plaything allowing it to provide appropriate verbal responses and mechanical operation allowing the child an overall play activity with rudimentary artificial intelligence and language learning, as discussed herein.

A number of games and other routines using speech and motor functions are defined as routines provided at step **1190**. A number of these games are referred to herein as eggs or "Easter eggs" which are complete activities undertaken by the interactive plaything which includes singing songs, burping, playing hide and seek, playing simon, and the like. For instance, when the toy is inverted to wake it from its sleeping state, it responds in a rooster song, saying "cock-a-doodle-doo" and going through a routine with its eyes and ears to wake up. A single bit per game or egg scenario is assigned, and each time a sensor is triggered, the program increments the counter and tests all game routines for a match. If a particular sentence does not match, then its disqualified bit is set and the routine moves on to determine whether other scenarios should be triggered by the child's manipulation of the sensors. If at any time all bits are set, then the counter is cleared to zero and the program starts counting over again. When a table associated with the scenario receives an end of table indication "FF" then the egg or game scenario is executed. In the described embodiment there are 24 possible egg routines. Each time a sensor is triggered, the system timer is reset. A sensor timer is reset with a global timekeeping variable. This timer is also used for the random sequential selection of sensor responses. If the timer goes to zero before the egg routine is complete, i.e., the plaything having not been played with within the defined time period, then all disqualified bits are cleared and counters are cleared. Other criteria based on the plaything's life as stored in memory may affect the ability to play games. For instance, if the plaything is indicated as being sick, either by having received a signal from another plaything to enter the sick condition, then no game would be played.

As discussed herein, the motor of the interactive toy is constantly being exercised and calibrated, at step **1184**. The TSTM **1174** runs a number of motor routines facilitating the operation of the motor via the motor tables. Periodically, e.g., when the motor is in the neutral position, the calibration interrupt is received from step **1186** which causes a frequent recalibration of the motor.

At step **1178**, the Texas Instruments co-processor is interfaced via a co-processor interface allowing for the operation of the speech synthesizer via the information processor **1002**, as discussed above. Speech synthesis according to the LPC routines is performed at step **1180**. Additionally, the co-processor **1050** facilitates infrared (IR) communications at step **1182** allowing for communications between interactive toys as discussed herein.

Various artificial intelligence (AI) functions are provided via step **1192**. Sensor training is provided at step **1194** in which training between the random and sequential weightings defines a random sequential split before behavior modification of the interactive toy, allowing the child to provide reinforcement of desirable activities and responses. In connection with the AI functions, step **1196** is used for appropriate responses to particular activities or conditions, e.g., bored, hungry, sick, sleep. Such predefined conditions have programmed responses which are undertaken by the interactive toy at appropriate times in its operative states. Additionally, as discussed, the interactive toy maintains its age (1–4) in a non-volatile memory **1030**, and step **1198** is used to increment the age where appropriate.

Accordingly, summarizing the wide range of life-like functions and activities the compact and cost-effective toy **10** herein can perform to entertain and provide intelligent seeming interaction with a child, the following is a description of the various abilities the preferred toy **10** has and some of the specifics in terms of how these functions can be implemented. The toy plaything **10** is provided with the computer program **1200** which enables it to speak a unique language concocted exclusively for the toy plaything herein, such as from a combination of Japanese, Thai, Mandarin, Chinese and Hebrew. This unique "Furbish" language is common to all other such toy playthings. When it first greets the child, the toy plaything will be speaking its own unique language. To help the child understand what the toy plaything is saying, the child can use the dictionary (Appendix A) that comes with the toy plaything **10**.

The toy plaything **10** responds to being held, petted, and tickled. The child can pet the toy plaything's tummy, rub its back, rock it, and play with it, e.g., via sensory input buttons

1032 and 1034. Whenever the child does these things, the toy plaything will speak and make sounds using the speech synthesizer of the co-processor 1050. It will be easy for the child to learn and understand Furbish. For example, when the toy plaything wakes up, it will often say "Da a-loh u-tye" which means "Big light up." This is how the toy plaything says "Good Morning!" Eventually, the toy plaything will be able to speak a native language in addition to its own unique language. Examples of native languages the toy 10 may be programmed with include English, Spanish, Italian, French, German and Japanese. The more you play with the toy plaything, the more it will use a native language.

The toy plaything 10 goes through four stages of development. The first stage is when the child first meets the toy plaything. The toy plaything is playful and wants to get to know the child. The toy plaything also helps the child learn how to care for it. The second and third stages of development are transition stages when the toy plaything begins to be able to speak in a native language. The fourth stage is the toy plaything's mature stage when it speaks in the native language more often but will also use its own unique language. By this time the child and toy plaything will know each other very well. The toy plaything is programmed to want the child to play with it and care for it.

At various times the toy plaything 10 is programmed to require certain kinds of attention from the child. Just like a child, the toy plaything is very good at letting people know when it needs something. If the toy plaything is hungry, it will have to be fed. Since it can talk, the child will have to listen to hear when the toy plaything tells the child it wants food. If the toy plaything says "Kah a-tay" (I'm Hungry), it will open its mouth so the child can feed it as by depressing its tongue. The toy plaything will say "Yum Yum" so the child will know that it is eating. As the child feeds the toy plaything, it might say "koh-koh" which means that it wants more to eat. If the child does not feed the toy plaything when it gets hungry, it will not want to play anymore until it is fed. When the toy plaything is hungry, it will usually want to eat 6 to 10 times. When the child feeds the toy plaything, he should give it 6 to 10 feedings so that it will say "Yum Yum" 6 to 10 times. Then the toy plaything will be full and ready to play.

If the child does not feed the toy plaything it is programmed to begin to get sick, e.g., step 1196. The toy plaything 10 will tell the child that it is sick by saying "Kah boo koo-doh" (I'm not healthy). If the child allows the toy plaything to get sick, soon it will not want to play and will not respond to anything but feeding. Also, if the toy plaything gets sick, it will need to be fed a minimum of 10–15 times before it will begin to get well again. After the toy plaything has been fed 10–15 times it will begin to feel better, but to nurse it back to complete health, the child will have to play with it. Just like a child, when the toy plaything feels better it laughs, giggles, and is happier. The child will know when its better because the toy plaything will say "Kah noo-loo" (Me happy) and will want to play games.

When the toy plaything is tired it will go to sleep. It will also tell the child when it is tired and wants to go to sleep. The toy plaything is usually quiet when it sleeps, but sometimes it snores. When it is asleep, it will close its eyes and lean forward. Sometimes the child can get the toy plaything to go to sleep by petting it gently on its back for a while. If the child pets the toy plaything between 10 and 20 times, it will hum "Twinkle, Twinkle" and then go to sleep. The child can also get the toy plaything to go to sleep by putting it in a dark room or covering its eyes for 10–15 seconds.

If the child does not play with the toy plaything for a while, it will take a nap until the child is ready to play again. When the child is ready to play with the toy plaything, he will have to wake the toy plaything up. When the toy plaything is asleep and the child wants to wake it up, he can pick it up and gently tilt it side to side until it wakes causing the tilt/invert sensor 1020 to resume from the low power mode. Sometimes, the toy plaything may not want to wake up and will try and go back to sleep after it is picked up. This is okay and the child just has to tilt the toy plaything side to side until it wakes up.

There are many ways to play with the toy plaything. The child and toy plaything can make up their own games or play some of the games and routines discussed herein which the toy plaything 10 is already programmed to use, e.g. the eggs 1190. One game is like "Simon Says". During this game the toy plaything will tell the child what activities to do and then the child has to repeat them. For example, the toy plaything may say, "Pet, tickle, light, sound." The child has to pet the toy plaything's back, tickle its tummy, cover its eyes, and clap his own hands. As the child does each of these, the toy plaything will say something special to let the child know that he has done the right action. The special messages are: for TICKLE the toy plaything will giggle; for PET, it will purr; for LIGHT, it will say "No Light"; and for SOUND, it will say "Big Sound". When the child hears the toy plaything say these things, he will know that he has done the right action. The first game pattern will have four actions to repeat. Then if the child does the pattern correctly, the toy plaything will reward the child by saying, "whoopiee!", or by even doing a little dance. The toy plaything then will add one more action to the pattern. If the child does not do the pattern correctly, the toy plaything will say "Nah Nah Nah Nah Nah Nah!" and the child will have to start again with a new pattern.

To play, the toy plaything says, "Tickle my tummy", "Pet my back", "Clap your hands", or "Cover my eyes". When the child wants to play this game it is important that he waits for the toy plaything to stop moving and speaking after each action before doing the next action. Therefore, to get the toy plaything to play, after the child tickles it, he should wait for it to stop moving before petting the toy plaything's back. Then after the child pets the toy plaything's back, he should wait until it stops moving before the child claps his hands.

If the child does the pattern correctly and gets the toy plaything to play the game, the toy plaything will say its name and "Listen me" so the child will know it is ready to play. If the child wants to play the game and follows the pattern and the toy plaything does not say its name and then "Listen me", the toy plaything is not paying attention to the child. The child will then have to get the toy plaything's attention by simply picking the toy plaything up and gently rocking it side to side once or twice. The child should then try again to play.

Once the toy plaything is ready to play, it will begin to tell the child which pattern to repeat. The toy plaything can make patterns up to 16 actions. If the child masters one pattern, the toy plaything will make up another new pattern so the child can play again and again. To end the game, pick up the toy plaything and turn it upside down. The toy plaything will then say "Me done" so the child will know to stop playing.

In another game the toy plaything can answer questions and tell the child secrets. To play, the child initiates the game by performing the following pattern of instructions on the toy plaything: "Cover my eyes", "Uncover my eyes",

"Cover my eyes", "Uncover my eyes", and "Rub my back". The toy plaything will then say "Ooh too mah" to let the child know it is ready. The child may then ask the toy plaything a question. Once the question is asked, rub the toy plaything's back to get it to answer. If the child does not ask the toy plaything a question within 20 seconds, the toy plaything will think the child does not want to play and say "Me done". The child will then have to get the toy plaything to play again by repeating the pattern. When the child wants to play this game, it is important that he wait for the toy plaything to stop moving and speaking after each action before doing the next action. Therefore, to get the toy plaything to play, after the child covers the toy plaything's eyes, he should wait for the toy plaything to stop moving before petting its back. If the child wants to play the game and follows the pattern, but the toy plaything does not say "Ooh too mah", then the toy plaything is not paying attention to the child. The child will then have to get the toy plaything's attention by simply picking the toy plaything up and gently rocking it side to side once or twice. The child should then try again to play. It is best to wait 3 to 5 seconds before doing each step in the game start pattern to make sure the toy plaything knows the child wants to play the game. To end this game, pick up the toy plaything and turn it upside down. The toy plaything will then say "Me done" so the child will know to stop playing.

Another game the toy plaything can play is HIDE AND SEEK. The toy plaything will start to make little noises to help the child find the toy plaything. To play, the child initiates the game by performing the following pattern of instructions on the toy plaything: "Cover my eyes", "Uncover my eyes", "Cover my eyes", "Uncover my eyes", "Cover my eyes", "Uncover my eyes", "Cover my eyes", "Uncover my eyes". The toy plaything will then say its name and then "Hide me" to let the child know it is ready to hide. The child will have one minute to hide the toy plaything. Once the toy plaything has been hidden, it will wait for three minutes to be found. If the child does not find the toy plaything within three minutes, the toy plaything will say, "Nah Nah Nah" three times. If the child wants to play the game and follows the pattern, but the toy plaything does not say its name and then "Hide me", the toy plaything is not paying attention to the child. The child will then have to get the toy plaything's attention by simply picking the toy plaything up and gently rocking it side to side once or twice. The child should then try again to play. When playing this game it is important that the child wait for the toy plaything to stop moving and speaking after each action before doing the next action. Therefore, to get the toy plaything to play after the child covers its light sensor, the child should wait for the plaything to stop moving before covering the toy plaything's eyes again. It is best to wait 3 to 5 seconds before doing each item in the game start pattern to make sure the toy plaything knows the child wants to play the game. The toy plaything will make small noises occasionally in order to help the child find the toy plaything. When the child finds the toy plaything and picks it up, the toy plaything will do a little dance to show that it is happy. To end this game, pick up the toy plaything and turn it upside down. The toy plaything will then say "Me done" so the child will know to stop playing.

One of the other activities the toy plaything likes to do is dance. The child can make the toy plaything dance by clapping his hands 4 times. The toy plaything will then dance. The child can get the toy plaything to dance again by clapping his hands one more time or by playing some music. It is best to wait 3 to 5 seconds between clapping each time to make sure the toy playthings knows the child wants it to dance. The toy plaything dances best on hard, flat surfaces. It can dance on other surfaces, but prefers wood, tile, or linoleum floors.

The child can teach the toy plaything to do tricks. While the child is playing with the toy plaything, he might tickle its tummy. The toy plaything may then do something the child likes, for example, give a kiss. As soon as the toy plaything gives a kiss, the child should pet its back 2 times. This tells the toy plaything that the child likes it when the toy plaything gives a kiss. The child should wait for the toy plaything to stop moving each time he pets the toy plaything's back before petting it again. Then the child should tickle the toy playthings's tummy again. The toy plaything may then or not give another kiss, depending how it feels at the time. If the toy plaything gives a kiss, the child should then pet the toy plaything's back again two times, remembering to always wait for it to stop moving each time before petting it again. If the toy plaything does not give a kiss, its tummy should be tickled again until it gives the child a kiss. The child should then pet the toy plaything's back two times. Then every time the toy plaything gives a kiss when the child tickles its tummy, the child should pet the toy plaything's back two times. Soon, every time the toy plaything's back is tickled it will give a kiss. If the child always pets the toy plaything's back when it kisses, it will always remember to give kisses when its tummy is tickled. If the child forgets to pet the toy plaything's back, it may forget to give a kiss when its tummy is tickled.

The example above is for an activity that the toy plaything does when its tummy is tickled. The same thing can be done for other activities the child would like the toy plaything to do if he covers the toy plaything's eyes, makes a big sound, picks up and rocks the toy plaything, or turns it upside-down. The important thing is that the child tell the toy plaything to repeat the action by petting its back 2 times after the toy plaything does it the first time, and then 2 times after every other time.

If the child wants to change what the toy plaything does, he can pet the toy plaything's back after another activity and it will begin to replace the original trick. Therefore, if the toy plaything was taught to give a kiss when its eyes were covered but the child wanted it to make a raspberry sound instead, the child should pet the toy plaything's back 2 times after the raspberry sound is made when the eyes are covered.

Toy playthings love to talk to each other. A conversation between two or more playthings can be started by placing them so that they can see each other and then tickle the toy plaything's tummy or pet its back. If the toy playthings do not start talking, try again. Toy playthings can also dance with each other by starting one of them dancing.

The toy playthings have to be in the line of sight of each other in order to communicate. Place the toy playthings facing each other and within 4 feet of each other. Toy playthings can communicate with more than one toy plaything at a time. In fact, any toy plaything placed so that it can see another toy plaything will enable communication between them. To start a conversation, tickle the toy plaything's tummy or pet its back.

While there have been illustrated and described particular embodiments of the present invention, it will be appreciated that numerous changes and modifications will occur to those skilled in the art, and it is intended in the appended claims to cover all those changes and modifications which fall within the true spirit and scope of the present invention.

APPENDIX A

FURBISH TO ENGLISH [+ POSSIBLE PHRASES]

ay-ay = Look/See
When the light gets brighter he may say. "Hey Kah/ay-ay/u-nye." [Hey, I see you.]
ah-may = Pet
To you he might say "ah-may/koh koh" [Pet me more!]
a-loh = Light
Furby may say "Dah/a-loh/u-tye" [Big light up] [Good morning.]
a-loh/may-lah = Cloud
a-tay = Hungry/Eat
And at lunch time "Kah/a-tay" [I'm hungry]
boh-bay = Worried
If he gets jarred he may say. "Kah-dah/boh-bay." [I'm scared]
boo = No
If you cover Furby's eyes. Furby might say "hey/kah/Boo/ayay/u-nye" [Hey, I don't see you]
dah = Big
When he has really had a good time "Dah/doo-ay" [Big fun]
doo? = What?/Question?
"a-loh/doo?" [where is the light?]
doo-ay = Fun
If Furby really likes something he might say "dah/doo-ay/wah!" [Big fun!]
doo-moh = [Please feed me]
When Furby is hungry he might ask you to "Doo-moh/a-tay" [Please feed me]
e-day = Good
e-tah = Yes
kah = Me
When Furby is happy you might hear "kah/may-may/u-nye" [I love you]
koh-koh = Again
koo-doh = Heath
If Furby has a tummy ache he might say "Kah/boo/Koo-doh" [I'm not healthy]
Lee-Koo = Sound
At a sudden noise he might say "Dah/lee-koo/wah!" [Loud sound!]
loo-loo = Joke
When you turn him upside down he might say "Hey/boo/loo-loo" [Hey. No jokes]
may-may = Love
When Furby REALLY likes you he will say "Kah/may-may/u-nye" [I love you]
may-lah = Hug
or "Doo-moh/may-lah/kah" [Please hug me]
may-tah = Kiss
Furby may ask for a kiss by saying "May-tah/kah" [Kiss me]
mee-mee = Very
At lunch time you might hear "Kah/mee-mee/a-tay" [I'm very hungry]
Nah-Bah = Down
In the evening "Dah/a-loh/nah-bah" [Sun down (Good night)]
nee-tye = Tickle
If Furby is bored he might ask you to "Nee-tye/kah" [Tickle me]
noh-lah = Dance
It's party time! "Dah/noh-lah" [Big dance]
noo-loo - Happy
When Furby is with his friends you might hear him say "Kah/mee mee/noo-loo/wah!" [I'm very happy!]
o-kay = OK
toh-dye = Done
toh-loo - Like
If Furby is flirting he may say "Kah/toh-loo/may-tah" [I see you]
u-nye = You
Or playing hide and seek "Kah/ay-ay/u-nye" [I see you]
u-tye = Up
And when he thinks it's time to get up "Dah/a-loh/u-tye" [Sun up(Good Morning)]

-continued

APPENDIX A

wah! = Yea!/exclamation!
When he is very hungry. "Hey/kah/mee-mee/ay-tay/wah!" [Hey, I'm very hungry!]
way-loh = Sleep
If you wake Furby up and he is still tired. "Yawn/Kah/way-loh/koh-koh." [I'm sleeping more]
wee-tee = Sing
At bedtime Furby might say: "Wee-tee/kah/way-loh" [Sing me to sleep]

ENGLISH TO FURBISH

Again/More =	koh-koh
Ask =	oh-too-mah
Big =	dah
Boogie/Dance =	noh-lah
Cloud =	a-loh/may-lah
Done =	toh-dye
Down =	Nah-bah
Fun =	doo-ay
Good =	e-day
Happy =	noo-loo
Health =	koo-doh
Hide =	Who-bye
Hug =	may-lah
Hungry =	a-tay
Joke =	loo-loo
Kiss =	may-tah
Light =	a-loh
Like =	toh-loo
Listen =	ay-ay/lee-koo
Love =	may may
Maybe =	may-bee
Me =	kah
No =	boo
OK =	o-kay
Pet =	ah-may
Please =	doo-moh
Scared =	dah/boh-bay
See =	ay-ay
Sing =	wee-tee
Sleep =	way-loh
Sound =	lee-koo
Sun =	dah/a-loh
Tickle =	nee-tye
Up =	u-tye
Very =	mee mee
Where? =	doo?
Worry =	boh-bay
Yeah! =	wah!
Yes =	e-tah
You =	u-nye

FURBISH TO ENGLISH PHRASES

Kah/toh-loo/may-tay =	Me like kisses
Wee-tee/kah/way loh =	Sing me to sleep
Kah/boo/ay-ay/u-nye =	I can't see you
Kah/a-tay =	I'm hungry
Kah/toh-loo/moh-lah/wah! =	I like to dance!
E-day/doo-ay/wah! =	I like this!
Kah/mee-mee/a-tay =	I very hungry
Nee-tye/kah =	Tickle me
Boo/koo-doh/e-day =	Don't feel good
o-too-mah =	Ask

What is claimed is:

1. A method of operating one or more interactive playthings, comprising the steps of:

providing an electric motor with a plurality of movable members coupled to an actuator linkage for interaction with a child for conveying information about the operational status of the plaything to the child;

providing a speech synthesizer for audio interaction with the child;

processing information for controlling the motor and the speech synthesizer;

generating sensory inputs for information processing;

operating in one of a plurality of operating modes in response to the processed information and the sensory inputs to modify the operation of the movable members and the audio interaction;

providing an infrared communication link as a sensory input for information processing; and

causing a plurality of the interactive playthings to communicate with one another via the infrared communication link.

2. A method as recited in claim **1** comprising the step of providing a doll having movable body parts with one or more of the body parts of the doll being controlled by the movable members for interacting with the child in a life-like manner.

3. A method as recited in claim **2** wherein said generating step facilitates a voice response provided by the speech synthesizer to visual and auditory sensory inputs created in the environment of the interactive plaything.

4. A method as recited in claim **3** wherein said information processing step provides rudimentary artificial intelligence impacting on the verbal response, language learning, motor operation, and overall operating modes of the interactive plaything to provide life-like and intelligent interactions.

5. A method as recited in claim **3** wherein said information processing step coordinates movements of the plurality of movable members to provide the toy with differing operational states including sleeping, waking, and excited states with the speech synthesizer generating words that complement the different states such as snoring and various exclamations.

6. A method as recited in claim **1** wherein the information processing step provides a unique language with the speech synthesizer for audio interaction with the child.

7. A method as recited in claim **6** wherein the information processing step modifies the unique language generated with the speech synthesizer for subsequent audio interaction with the child.

* * * * *