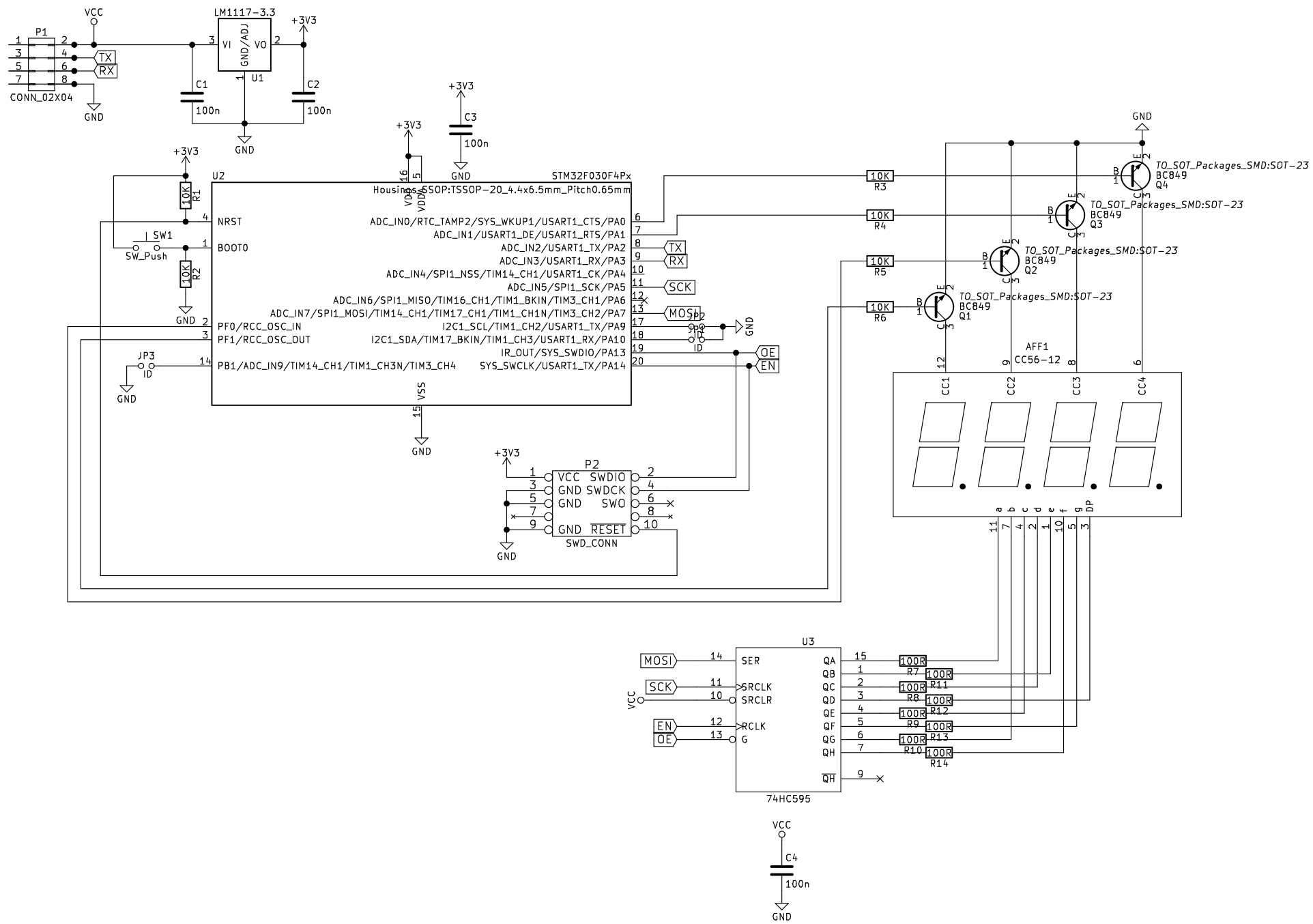

Sheet: /
File: 7Segment.sch

Title:

Size: A3	Date:	Rev:
KiCad E.D.A. kicad 4.0.5+dfsg1-4		Id: 1/1