$17.50

THE COMPLETE OFFICIAL TRIUMPH SPITFIRE 1500 1975-1977

Comprising the official

driver's handbook
workshop manual

Robert Bentley, Inc.
872 Massachusetts Avenue
Cambridge, Mass. 02139

PUBLIC LIBRARY
EAST ORANGE, NEW JERSEY

THE COMPLETE OFFICIAL TRIUMPH SPITFIRE 1500

Model Years 1975-1977

PUBLIC LIBRARY
EAST ORANGE, NJ

Complete Service Manuals published by Robert Bentley, Inc.

Volkswagen Beetle and Karmann Ghia Official Service Manual Type 1, Model Years 1966-1969. Volkswagen of America, Inc.

Volkswagen Super Beetle, Beetle and Karmann Ghia Official Service Manual Type 1, Model Years 1970-1978. Volkswagen of America, Inc.

Volkswagen Station Wagon/Bus Official Service Manual Type 2, Model Years 1968-1978. Volkswagen of America, Inc.

Volkswagen Fastback and Squareback Official Service Manual Type 3, Model Years 1968-1973. Volkswagen of America, Inc.

Volkswagen Dasher Service Manual, Model Years 1974-1977. Robert Bentley, Inc.

Volkswagen Rabbit/Scirocco Service Manual, Model Years 1975-1977. Robert Bentley, Inc.

Audi Fox Service Manual, Model Years 1973-1977. Robert Bentley, Inc.

Capri Complete Service Manual, Model Years 1970-1975. Robert Bentley, Inc.

Complete Official Triumph TR2 & TR3, 1953-1961 — includes Driver's Instruction Book and Service Instruction Manual. British Leyland Motors

Complete Official Triumph TR4 & TR4A, 1961-1968 — includes Driver's Handbook, Workshop Manual, Competition Preparation Manual. British Leyland Motors

Complete Official Triumph GT6, GT6+ & GT6 Mk III, 1967-1973 — includes Driver's Handbook and Workshop Manual. British Leyland Motors

Complete Official Triumph TR6 & TR250, 1967-1976 — includes Driver's Handbook and Workshop Manual. British Leyland Motors

Complete Official Triumph Spitfire Mk III, Mk IV & 1500, 1968-1974 — includes Driver's Handbook and Workshop Manual. British Leyland Motors

Complete Official Triumph Spitfire 1500, 1975-1977 — includes Driver's Handbook and Workshop Manual. British Leyland Motors

Complete Official Triumph TR7, 1975-1977 — includes Driver's Handbook and Workshop Manual. British Leyland Motors

Complete Official Austin-Healey 100-Six and 3000, 1956-1968. British Leyland Motors

MG Workshop Manual: Complete Tuning and Maintenance for All Models from "M"-Type to TF 1500. W. E. Blower

Complete Official MGB, 1962-1974 — includes Driver's Handbook, Workshop Manual, Special Tuning Manual. British Leyland Motors

Complete Official MGB, 1975-1977 — includes Driver's Handbook and Workshop Manual. British Leyland Motors

Complete Official Jaguar "E" — includes Driver's Handbook, Workshop Manual, Special Tuning Manual. British Leyland Motors

Complete Official 948cc & 1098cc Sprite/Midget — includes Driver's Handbook, Workshop Manual, Special Tuning Manual. British Leyland Motors

Complete Official 1275cc Sprite/Midget, 1967-1974 — includes Driver's Handbook, Workshop Manual, Emission Control Supplement. British Leyland Motors

Complete Official MG Midget 1500, 1975-1977 — includes Driver's Handbook and Workshop Manual. British Leyland Motors

THE COMPLETE OFFICIAL TRIUMPH SPITFIRE 1500

Model Years 1975-1977

Comprising the official

driver's handbook
workshop manual

Robert Bentley, Inc.
872 Massachusetts Avenue
Cambridge, Mass. 02139

DISCARD
PUBLIC LIBRARY
EAST ORANGE, NEW JERSEY

C7387
1975-1977
Cop. 1

ACKNOWLEDGEMENT
Special thanks are due C. S. Byrd,
Parts Publication Specialist,
British Leyland Motors, Inc.

NOTE TO USERS OF THIS MANUAL

The publisher encourages comments from users of this Manual. These communications have been and will be carefully considered in preparation of this and other Manuals. Please write to Robert Bentley, Inc., 872 Massachusetts Ave., Cambridge, Mass. 02139.

Library of Congress Catalog Card Number 77-87168
ISBN 0-8376-0124-X
Manufactured in the United States of America
Copyright © 1978 Robert Bentley, Inc.
All rights in this book are reserved

No responsibility accepted for the accuracy of the contents

11.50
2-9-78

Preface

This Manual has been compiled in order to provide complete, accurate, and comprehensive maintenance and repair data to both car owners and professional mechanics. The *Driver's Handbook,* which comprises the first part of this Manual, is similar to the handbook provided with every new Triumph sports car. The *Workshop Manual,* which comprises the second — and largest — portion of this Manual, is the official factory manual and was originally intended for use by dealer service departments. The Publisher has added new material to the factory data so that the present Manual is suitable both for persons of limited mechanical experience and for those trained mechanics who may not be altogether familiar with Triumph cars.

Home Maintenance and Repair

Though professional mechanics will find this Manual indispensable as a source of specifications, testing procedures, and precision fitting data, these mechanics usually carry out years of training and experience. For example, professional mechanics know without being told that engine, transmission, and rear axle parts must be properly pre-lubricated when they are reassembled following an overhaul. Therefore, this information is not commonly included in factory workshop manuals. On the other hand, non-professionals often need to be reminded of these things since mechanical work may not be a part of their daily routine. Wherever possible, the Publisher has included *Notes* and *Cautions* to alert the non-professional mechanic to those additional considerations that a professional mechanic would take into account as a matter of course.

Though simple maintenance procedures — such as those described in the *Driver's Handbook* portion of this Manual — require only a minimum of tools, the car owner will sooner or later find it desirable to obtain a fairly complete set. The basic tools include an assortment of open- and box-end wrenches and a selection of screwdrivers, pliers, one or two adjustable wrenches and other miscellaneous items such as feeler gauges, a spark plug socket, etc. A socket wrench set — preferably 3/8-in drive — will speed up many common jobs and may be indispensable to others. A quality set of tools can be a good investment; they will last a lifetime if not abused. Cheaply made tools will not last long without wear and breakage and often damage bolts and fittings which cost more to replace than the money saved in buying inferior tools.

Liberal reference is made in this Manual to the special service tools that are recommended by the factory. These special tools are not supplied by British Leyland Motors but can be ordered from Messrs. V. L. Churchill & Company Limited, P.O. Box No. 3, London Road, Daventry, Northants, England — information that may prove of little value to a car owner in the U.S. who must repair his car by the next weekend! Fortunately, generic equivalents for most of these special tools are available from American tool manufacturers that supply professional mechanics. Do not, however, overlook the possibility of obtaining the needed tool from a tool rental agency. In many U.S. cities, there are also do-it-yourself garages that rent or loan special tools to those who patronize the shop.

This Manual describes certain precision reconditioning jobs that even Authorized Dealers commonly farm out — either to an automative machine shop or to a specialty shop. These jobs include cylinder reboring, crankshaft reconditioning, valve grinding, starter rebuilding, sheet metal repair, etc. Instead of delivering the entire car to a professional mechanic, who may take the parts to an outside machine shop, you can save considerable money by removing the worn or damaged components and taking them to the machine shop yourself.

Advice for Professionals and Car Owners Alike

Assembly work on small, highly-tuned machines such as the Triumph sports cars must be carried out with greater precision than is commonly practiced on large American cars. Particular emphasis must be given to the proper use of torque wrenches and to the strict adherance to tightening torque specifications which are given in this Manual. Though all of the torque specifications may fall within the range of a 0-100 ft. lb. (0-14 mkg) torque wrench, torque wrenches operate most efficiently when used in the middle two quarters of their scales. Thus, a small torque wrench with a range of 0-50 ft. lb. (0-7 mkg) is recommended in addition to a larger torque wrench with a 150 ft. lb. (21 mkg) capacity. A fastener that is too tight can be worse than one that is too loose — especially on a lightweight sports car. Stretched or broken bolts and distorted parts that result from overtightening become a serious concern where the precision fitting of light alloy and thin-wall iron castings is involved.

Lastly, the importance of cleanliness cannot be overemphasized. Under no circumstances should an engine or gearbox be repaired on the ground or on a garage floor. Thoroughly clean the exteriors of major components prior to disassembly in order to keep road dirt and other grime out of the working parts. No more than a pinch of abrasive dust in a gearbox can cause rapid failure of the synchronizers and bearings.

During the final assembly of an engine or gearbox, the cleaned parts should be laid out on a clean workbench which has been covered with clean sheets of new cardboard or wrapping paper. The engine or gearbox itself, if not mounted on a special stand, should likewise be placed on a clean workbench. Sandpapering, valve grinding, or the use of bench grinders should not be permitted near the area where final assembly is taking place. If assembly cannot be completed in a day, enclose the partially-assembled engine or gearbox in a large plastic bag — such as a new trash bag or a dry cleaner's garment return bag — so that dust and dirt will be excluded until assembly work resumes.

David N. Wenner
Automotive Editor
Robert Bentley, Inc.

Please read these warnings and cautions before proceeding with maintenance and repair work.

WARNING ——

- Never work under a lifted car unless it is solidly supported on stands intended for the purpose. Do not support a car on cinder blocks, hollow tiles, or other props that may crumble under continuous load. Do not work under a car that is supported solely by a jack.

- If you are going to work under a car on the ground, make sure that the ground is level. Block the wheels to keep the car from rolling. Disconnect the battery ground strap to prevent others from starting the car while you are under it.

- Never run the engine unless the work area is well ventilated. Carbon monoxide kills.

- Tie long hair behind your head. Do not wear a necktie, scarf, loose clothing, or necklace when you work near machine tools or running engines. If your hair, clothing, or jewelry were to get caught in the machinery, severe injury could result.

- Disconnect the battery ground strap whenever you work on the fuel system or the electrical system. When you work around fuel, do not smoke or work near heaters or other fire hazards. Keep an approved fire extinguisher handy.

- Illuminate your work area adequately but safely. Use a portable safety light for working inside or under the car. Make sure its bulb is enclosed by a wire cage. The hot filament of an accidentally broken bulb can ignite spilled fuel or oil.

- Finger rings should be removed so that they cannot cause electrical shorts, get caught in running machinery, or be crushed by heavy parts.

- Catch draining fuel, oil, or brake fluid in suitable containers. Do not use food or beverage containers that might mislead someone into drinking from them. Store flammable fluids away from fire hazards. Wipe up spills at once, but do not store the oily rags, which can ignite and burn spontaneously.

- Keep sparks, lighted matches, and open flame away from the top of the battery. If hydrogen gas escaping from the cap vents is ignited, it will ignite gas trapped in the cells and cause the battery to explode.

- Always observe good workshop practices. Wear goggles when you operate machine tools or work with battery acid. Gloves or other protective clothing should be worn whenever the job requires it.

CAUTION ——

- If you lack the skills, tools and equipment, or a suitable workshop for any procedure described in this Manual, we suggest you leave such repairs to an Authorized Dealer or other qualified shop. We especially urge you to consult your Authorized Dealer before attempting any repairs on a car still covered by the new-car warranty.

- Before starting a job, make certain that you have all necessary tools and parts on hand. Read all instructions thoroughly; do not attempt shortcuts. Use tools appropriate to the work and use only replacement parts meeting specifications. Makeshift tools, parts, and procedures will not make good repairs.

- Use pneumatic and electric tools only to loosen threaded parts and fasteners. Never use such tools to tighten fasteners, especially on light alloy parts.

- Be mindful of the environment and ecology. Before you drain the crankcase, find out the proper way to dispose of the oil. Do not pour oil onto the ground, down a drain, or into a stream, pond, or lake. Consult local ordinances that govern the disposal of wastes.

Contents

Preface v

1 OFFICIAL TRIUMPH SPITFIRE 1500 DRIVER'S HANDBOOK

FOREWORD 2

CONTROLS, INSTRUMENTS AND INDICATORS 3
Instrument illumination rheostat, Turn signal monitor, Combination switch, Speedometer, Hazard warning switch, Tachometer, Windscreen (windshield) wiper and washer control, Seat belt warning indicator, Air distribution, Fuel gauge, Light switch, Temperature gauge, Heater control, Brake-line failure/handbrake warning indicator, Cigar-lighter, Map reading light, Gear selector lever, Overdrive unit, Handbrake lever, Catalytic converter warning light, Ignition, starter and steering lock switch, Accelerator, brake and clutch pedals

SEATS AND SAFETY HARNESS 6
Seat adjustment, Head restraint, Description of inertia reel type harness, Cleaning, Using the harness, Inertia reel mechanism check

LOCKS AND KEYS 7
Door locks, Luggage compartment lock, Bonnet catch, Fuel filler cap

SOFT TOP 8
Lowering the soft top, Soft top in the down position, Tonneau cover, Raising the soft top, Opening rear window, Rear view mirror, Sun visors

HARD TOP (OPTIONAL) 9

HEATING AND VENTILATING SYSTEM 10
Air distribution lever, Air temperature lever, Booster fan, Lever settings

COOLING SYSTEM 11
Pressure cap, Draining, Filling, Frost precautions

RUNNING INSTRUCTIONS 12
Seat belt warning system, Preparing to drive, Audible alarm system, To disengage steering lock and start engine, To stop engine and engage steering lock, Starting procedure, Running-in, Maximum engine speeds

WHEELS AND TIRES 14
General, Radial-ply and cross-ply tires, Tire wear, Pressures, Recommended tire pressures chart, Spare wheel, tools and lifting jack, Using the jack, Repairs to tubeless tires, Wheel changing procedure

ELECTRICAL SYSTEM 15
Bulb chart, 1975 wiring diagram and key, 1976-1977 wiring diagram and key, Fuse system (circuits), Radio facility, Charging system (alternator), Battery, Headlamps (beam aiming, filament failure)

WINDSCREEN (WINDSHIELD) WIPERS 19
Renew wiper blade, Renew wiper blade and arm

ROUTINE SERVICING 20
Periodic checks — weekly (engine, radiator water level, windscreen (windshield) washer, brake master cylinder, clutch master cylinder, tires), Periodic checks — monthly (battery, wheels, lights), 1000 miles free service, Scheduled maintenance (air cleaner, engine oil change, gearbox, final drive, distributor, lubrication, cleaning), Ignition (ignition timing, spark plugs, plug lead position, high tension cables), Hydraulic pipes, Rear brakes, Front brakes, Fan belt adjustment, Air pump belt adjustment, Rocker clearances, Evaporation system adsorption canister, Carburetor damper, Oil filter, Fuel line filter, Exhaust system, Universal coupling bolts, Rear hubs, Cylinder head nuts, Front hubs, Lower steering swivel, Steering unit and suspension, Handbrake cable guides, Electrical equipment, Body, General

BRAKE AND HYDRAULIC SYSTEM 27
Front brake pads, Rear brakes — adjustment, Handbrake adjustment, Bleeding the hydraulic braking system, Procedure for re-centralizing the P.D.W.A. shuttle, Preventive maintenance, Replacing brake shoes

1975 EMISSION AND EVAPORATIVE CONTROL SYSTEMS — CATALYTIC CONVERTER SPECIFICATION ONLY 29
Fuel, Servicing, Carburetor (controls, servicing schedules), Crankcase breathing, Running-on control valve, System description, Servicing, Function checks, Evaportative control system, Exhaust gas recirculation (E.G.R.) system, Catalytic converters, Misfiring

1976-1977 EMISSION AND EVAPORATIVE CONTROL SYSTEMS 32
Fuel, Servicing, Carburetor (controls, adjustments for altitude, servicing schedules), Crankcase breathing, Running-on control (anti-run-on) valve, Evaporative control system, Exhaust gas recirculation, Air injection system, Catalytic converters — U.S.A. (California, other than California), Precautions

MAINTENANCE SUMMARY 36
Maintenance intervals, 1-month service, 3-month service, 6-month service, 12-month service, 24-month service

CARE OF BODYWORK 40
Washing, Removing grease and tar, Glass surfaces, Chromium plating and stainless steel, Polishing, Interior of car and soft top, Inflammability

LUBRICATION SPECIFICATION 40

GENERAL SPECIFICATION 41
Engine, Lubrication, Cooling system, Fuel system, Ignition system, Electrical system, Transmission, Steering, Suspension, Brake system, Exterior dimensions, Weights, Chassis data, Capacities, Road speed data, Tuning data chart

2 OFFICIAL TRIUMPH SPITFIRE 1500 WORKSHOP MANUAL

INTRODUCTION 48
Indexing, Operation numbering, Emission control, Service tools, References, Amendments, Repairs and replacements, Abbreviations and symbols, Location of commission unit numbers

GENERAL SPECIFICATION DATA 51
Complete technical specifications for: Engine, Lubrication, Cooling system, Fuel system, Clutch, Gearbox, Final drive, Effective gearing, Road speed, Steering, Brake system, Wheels and tires, Chassis, Electrical equipment,

Overall dimensions, Weights, Towing information, Vehicle dimensions, Paint and trim coding system

ENGINE TUNING DATA 57
Engine, Carburetor, Ignition coil, Ballast resistor, Ignition distributor, Sparking plugs

TORQUE WRENCH SETTINGS 59

RECOMMENDED LUBRICATING FUELS AND FLUID CAPACITIES 63
Lubrication chart, Recommended hydraulic fluids, Recommended fuel, Anti-freeze solutions, Capacities

MAINTENANCE 67
Maintenance summary, Maintenance chart, Maintenance operations

ENGINE 99
Distributor drive shaft and gear, Camshaft, Connecting rods and pistons, Pistons and/or rings — engine set, Piston and connecting rod data, Connecting rod bearings — set, Crankshaft pulley, Crankshaft rear oil seal, Crankshaft end-float, Crankshaft, Crankshaft data, Main bearing — set, Crankshaft spigot bush, Cylinder pressures, Cylinder block drain plug, Cylinder block front mounting plate gasket, Crankcase front sealing block, Cylinder head gasket, Cylinder head, Valve data, Decarbonize, reface all valves and seats, grind-in valves, tune engine, Cylinder head nuts, Rocker cover, Valve clearance, Rocker shaft, Rocker shaft assembly, Rocker adjusting screws — set, Cam followers — set, Push rods — set, Valve springs, Engine and gearbox assembly, Engine assembly, Engine mountings, Engine restraint cable, Engine rear adaptor plate, Flywheel, Starter ring gear, Oil filter, Oil pick-up strainer, Oil pump, Oil pump data, Oil sump, Oil pressure relief valve, Timing cover, Timing chain cover oil seal, Valve timing, Timing chain and sprockets, Timing chain tensioner

EMISSION AND EVAPORATIVE CONTROL 169
Evaporative loss control system (USA models only), Exhaust emission control, Vapor separator, Adsorption canister, Air pump, Air pump drive belt, Air distribution manifold, Check valve, Diverter relief valve, Air intake temperature control, Air intake control, Running-on control valve, Exhaust gas recirculation valve, Exhaust gas recirculation cut-out valve (USA catalytic converter specification only), Catalytic converter

FUEL SYSTEM 185
Air cleaner (single Stromberg USA catalytic and non-catalytic specification, twin SU), Air cleaner element, Carburetor (single Stromberg), Carburetors (twin SU installation), Carburetor (manual choke, automatic choke), Float chamber needle valve (single Stromberg), Float chamber needle and seat (twin SU carburetors), Piston and suction chamber, Float chamber levels, Diaphragm, Automatic choke, Starter assembly, Deceleration and bypass valve, Throttle pedal, Throttle cable, Mixture control cable, Fuel main filter, Hose — filler to tank, Fuel pump, Fuel tank

COOLING SYSTEM 217
Coolant, Cooling system pressure test, Fan belt, Fan blades, Viscous coupling, Hoses, Radiator, Thermostat, Water pump, Water pump housing assembly

MANIFOLD AND EXHAUST SYSTEM 229
Description, Exhaust system complete, Front pipe, Intermediate pipe, Tail pipe and silencer, Down pipe flange packing, Exhaust system alignment, Manifolds, Mounting straps

CLUTCH 237
Clutch assembly, Hydraulic system, Fluid pipe, Master cylinder, Release bearing assemby, Bearing assembly, Clutch pedal, Clutch pedal return spring, Slave cylinder

SINGLE RAIL GEARBOX — MANUAL 245
Drive flange, Rear extension, Clutch/bell housing, Main case, Gearchange lever, Gear lever draught excluder, Gear change selectors, Gear selector mechanism and housing, Gearbox assembly, Synchronizer assemblies, First motion shaft, First motion shaft bearing, Layshaft, Layshaft bearing, Mainshaft bearing, Rear oil seal, First motion shaft oil seal, Gear change rod oil seal, Speedometer drive gear, Speedometer drive pinion

OVERDRIVE — J TYPE 269
Diagrams and keys — overdrive components, Introduction, Working principles, Solenoid and operating valve, Hydraulic system, Lubrication system, Maintenance, Cleanliness, Fault diagnosis and rectification, Dimensions and clearance for new parts, Sump filter, Pressure filter, Rear oil seal, Relief valve and dashpot assembly, Pump non-return valve, Control orifice, Operating pistons, Oil pump, Overdrive assembly, Solenoid, Solenoid operating valve, Speedo drive gear

PROPELLER AND DRIVE SHAFT 301
Rear drive shaft, Rear drive shaft trunnion bushes, Propeller shaft, Universal joint

FINAL DRIVE 309
Inner drive shaft bearing, Differential assembly, Pinion oil seal, Final drive unit, Final drive unit mounting plate, Final drive unit mounting plate rubbers

STEERING 323
Steering rack and pinion, Steering rack gaiters, Steering rack damper, Steering column assembly, Steering column safety clamp, Steering column unit, Steering column flexible coupling, Steering column lock/ignition switch, Tie rod ball joint — outer, inner, Steering wheel, Steering wheel hub, Steering geometry, Front wheel alignment, Camber angle

FRONT SUSPENSION 337
Anti-roll bar, Anti-roll bar link, Anti-roll bar rubbers, Ball joint, Trunnion, Front road spring, Front hub, Front hub bearing end-float, Front hub bearings, Front hub oil seal, Front hub stub axle, Vertical link, Front hub wheel studs, Front damper, Front damper bushes, Wishbone — upper, lower

REAR SUSPENSION 349
Rear hub, Rear hub wheel studs, Rear road spring, Rear wheel alignment, Rear damper, Vertical link, Radius rod, Radius rod bushes

BRAKES 357
Rear brake drum, Front disc, Front disc shield, Rear backplate, Brake hose — front, rear, 2-way connector, 3-way and 4-way connector, P.D.W.A. unit, Brake pipes, Bleeding brakes, Adjusting brakes, Master cylinder, Tandem type master cylinder, Brake pedal assembly, Handbrake lever, Handbrake pawl and ratchet, Handbrake cables, Handbrake compensator, Relay lever, Front brake pads, Rear brake shoes, Rear brake adjuster, Front caliper, Rear brake cylinder

WHEELS AND TIRES 377
Tires — general (radial and cross-ply tires, size, type, pressures, wear, damage, repairs, tubeless tires, tubes, winter tires, racing and competition tires, valves), Wheel and tire balance, Wheels

BODY 383
Chassis frame — alignment, Spoiler, Transmission tunnel trim pads, Rear compartment trim pad, Arm rest, Bonnet, Bonnet stay, Bonnet catch, Luggage compartment lid, Luggage compartment lid lock, Luggage compartment lid lock striker, Underriders, Overrider — front, rear, Bumper — front, rear, Gearbox tunnel cover, Door, Door hinges, Door glass, Door glass regulator, Door trim pad, Door lock, Door lock striker, Door lock remote control, Private lock, Door check strap, Fascia — driver's side, center, passenger's side, Fascia crash pad, Fascia support bracket, Carpet, Front grille, Door handle, Door pull,

Hard top, Hood, Parcel shelf, Ashtray, Seat cushion cover, Seat squab cover, Seats, Seat runners, Seat squab catch, Seat belts — static, automatic, Engine valence — left-hand, right-hand, Windscreen (windshield), Finisher strip insertion tool

HEATING AND VENTILATION 411
Air flow control cable, Water valve control cable, Air flow control, Water valve control, Water valve, Heater unit, Fan motor, Water hoses

WINDSCREEN (WINDSHIELD) WIPERS AND WASHERS 417
Windscreen (windshield) washer reservoir, Windscreen (windshield) washer jet, Windscreen (windshield) washer pump, Windscreen (windshield) wiper system (data and description), Windscreen (windshield) wiper arm, Windscreen (windshield) wiper blade, Wiper motor, Wiper system, Windscreen (windshield) wiper rack, Windscreen (windshield) wiper wheelbox — left-hand, right-hand

ELECTRICAL 429
Bulb chart, Wiring diagrams and keys (right-hand steer, non-USA left-hand steer, USA left-hand steer), Alternator data chart, Alternator wiring diagram and key, Alternator, Battery, Ignition distributor data, Ignition coil and ballast resistor, Ignition distributor — Lucas 45D4, Lucas 45DE4, 'Opus electronic in built' system, Electronic ignition system — troubleshooting, Test chart for complete failure, Drive resistor, Lamps, Rear number plate lamp, Emission control system, Relays, Flasher unit, Seat belt warning system, Seat belt warning buzzer/timer module, Key warning system, Starter motor (data and description), Switches (data), Cigarette lighter, Fuse system

INSTRUMENTS 493
Voltage stabilizer, Temperature indicator, Temperature transmitter, Fuel indicator, Fuel tank unit, Speedometer, Speedometer cable — complete, inner, upper, lower, Service interval indicator — E.G.R., catalyst, Tachometer

SERVICE TOOLS 505

Directions for using torque wrenches calibrated in newton meters

In adopting the SI (*Systeme International)* units of measure, which constitute the Modernized Metric System, tool manufacturers are beginning to introduce torque wrenches that are calibrated in newton meters. As metrication proceeds, torque specifications given in foot pounds (ft. lb., lb. ft., or lbf. ft.) and meter kilograms (mkg, kg. m., or kgf. m.) will eventually be replaced by torque specifications given in newton meters (N·m or Nm).

At present, there are in use too few torque wrenches calibrated in newton meters to justify the inclusion of newton meter torque specifications in this Manual. Nevertheless, if you purchase a new torque wrench, we recommend that you try to obtain one that is calibrated in newton meters. Such a tool can easily be used with this Manual by converting the meter kilogram specifications to newton meters.

To convert meter kilograms (kg. m.) to newton meters, simply disregard the decimal point. For example, 3.5 kg. m. would become 35 Nm. To convert centimeter kilograms (kg. cm.) to newton meters, point-off the one place with a decimal. For example, 50 kg. cm. would become 5.0 Nm. These conversions are not mathematically precise (3.5 kg. m. actually equals 34.3 Nm) but they are adequate for normal workshop purposes.

TRIUMPH SPITFIRE 1500
DRIVER'S HANDBOOK

PART 1

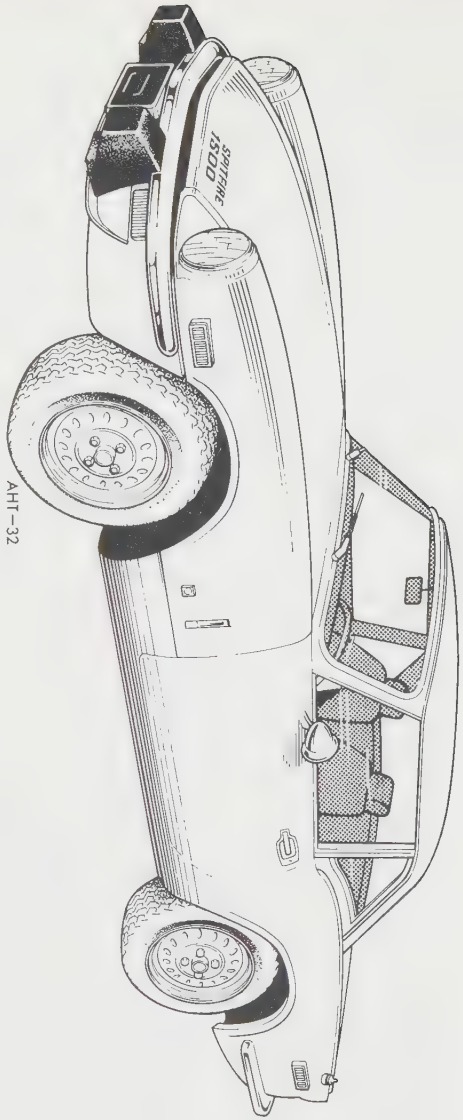

AHT-32

FOREWORD

This Handbook provides an introduction to your car together with information on the care and periodic maintenance required to combine trouble-free motoring with minimal running costs.

References to right- or left-hand in this Handbook are made when viewing the car from the rear. In all communications relating to Service or Spares, please quote the Commission Number (Chassis Number), paint and trim numbers. These are stamped on a plate attached to the body adjacent to the left-hand door striker plate. The Commission Number is also stamped on a plate attached to the left-hand windscreen pillar and visible through the screen.

Specification details—the Manufacturers reserve the right to vary their specifications with or without notice, and at such times and in such manner as they think fit. Major as well as minor changes may be involved in accordance with the Manufacturer's policy of constant product improvement.

Whilst every effort is made to ensure the accuracy of the particulars contained in this Handbook, neigher the Manufacturer nor the Distributor or Dealer, by whom this Handbook is supplied, shall in any circumstances be held liable for any inaccuracy or the consequence thereof.

Triumph Dealers are provided with the latest information concerning special service tools and workshop techniques, enabling them to undertake your service and repairs in the most efficient and economic manner.

Maintenance—By servicing the car as indicated in the Maintenance Summary given in this Handbook, it will not only keep in good running order but will have an enhanced resale value.

The operations carried out by your Dealer will be in accordance with the current recommendations and may be subject to revision from time to time.

Genuine STANPART and UNIPART service parts are designed and tested for your vehicle and have the full backing of the Triumph Factory Warranty. ONLY WHEN GENUINE STANPART OR UNIPART SERVICE PARTS ARE USED CAN RESPONSIBILITY BE ACCEPTED.

Genuine parts are supplied in cartons bearing either of these symbols:

GENUINE STANPART PARTS & ACCESSORIES

UNIPART

D1306

All rights reserved. No part of this publication may be reproduced, stored in a retrieval system or transmitted, in any form, electronic, mechanical, photocopying, recording or other means without prior written permission of Rover Triumph, British Leyland U.K. Ltd. Service Division.

List of Sections

	Page
Foreword	2
Controls, Instruments and Indicators	3
Seats and Safety Harness	6
Locks and Keys	7
Soft Top, Sun Visors and Rear View Mirror	8
Hard Top	10
Heating and Ventilating System	10
Cooling System	11
Running Instructions	12
Wheels and Tyres	14
Electrical System	15
Wiring Diagram	16
Windscreen Wipers	19
Routine Servicing	20
Brake and Hydraulic System	27
Emission and Evaporative Control System	29
Maintenance Summary	36
Care of Bodywork	40
Lubrication Specification	40
General Specification	41
Tuning Data	43

CONTROLS, INSTRUMENTS AND INDICATORS

(1975 controls slightly different)

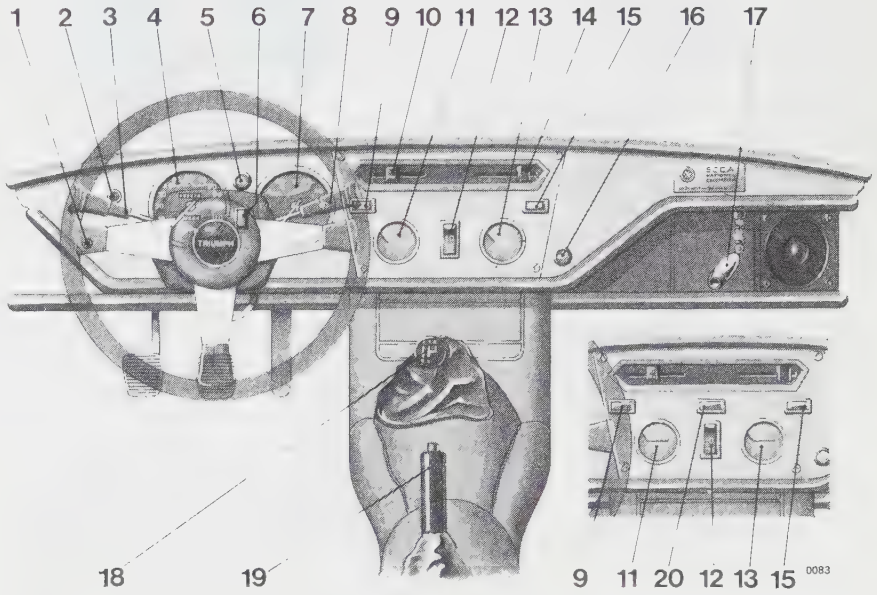

Fig. 1

Key to Fig. 1 (Facia)

1 Instrument illumination
2 Turn signal monitor
3 Combination switch
4 Speedometer
5 Hazard warning switch
6 Hazard warning indicator
7 Tachometer
8 Windscreen wiper/washer control
9 Seat belt warning indicator
10 Air distribution control
11 Fuel gauge
12 Lighting switch
13 Temperature gauge
14 Heater control
18 Brake-line failure/handbrake warning indicator
16 Cigar lighter
17 Map reading light
18 Gear selector lever
19 Handbrake lever
20 Catalytic converter service warning (*California specification only*).

Inset refers to California specification vehicles only

The controls, instruments and indicators shown in Fig. 1 and described in the following pages are positioned within easy reach of the driver to afford maximum ease of operation with minimum distraction. The bracketed figures in the side headings cross-refer with the key on page 3.

Instrument Illumination Rheostat (1)

Turn the knob clockwise to illuminate the instruments. Further rotation of the knob diminishes the light intensity—operates only when the lights are switched on.

Turn Signal Monitor (2)

A green monitor at the left-hand side of the facia glows intermittently when the ignition is switched on and the turn signal control operated. Should the monitor fail to operate, this indicates a broken filament in one of the turn signal lamp bulbs or a fault in the monitor bulb.

Combination Switch (3) (Fig. 2)

The steering-column combination switch serves the following purposes:

Horns (A)—To operate the horns, press the end of the control.

Direction indicators (L and R)—To indicate a left-hand turn, move the lever anti-clockwise. Move it clockwise for right-hand turns. This control is effective only when the ignition is switched on.

Head lamp main beam (B)—To operate the main beams, push the lever fully forward away from the steering wheel. Pull the lever to its neutral (central) position for dipped beams. This control is effective only when the 'Master Lighting Switch' is moved to the headlamp position.

Speedometer (4) (Fig. 3)

Calibrated in miles and kilometres per hour, the speedometer also combines the following indicators and warning devices:

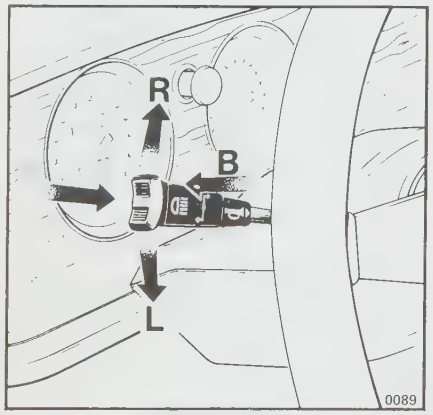

Fig. 2

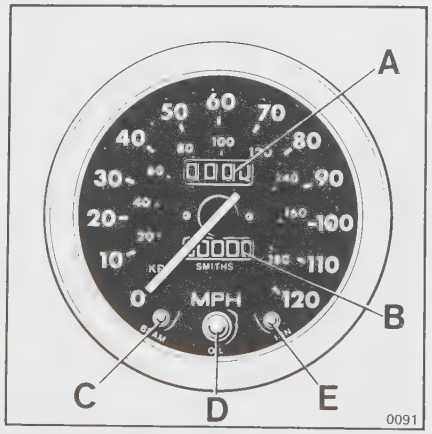

Fig. 3

Trip Indicator (A)

When initially set at zero, figures within the aperture above the centre of the dial will record the distance of a particular journey. To zero the trip indicator, turn the knob which is located below the facia rail.

Mileage Indicator (B)

Figures within the aperture below the centre of the dial record the total mileage of the vehicle.

Main Beam Warning Light (C)

An indicator at the bottom left-hand side of the dial glows blue when the headlamp main beams are selected and is extinguished when the headlamps are "dipped".

Oil Pressure Warning Light (D)

An indicator at the bottom of the dial glows green when the ignition is switched on and is extinguished as the engine speed increases. Should the indicator continue to glow when driving away, stop the engine and check the sump oil level. If this is satisfactory, have the lubrication system checked immediately.

Ignition Warning Light (E)

An indicator at the bottom right-hand side glows red when the ignition is switched on and is extinguished as the engine speed increases. Should the indicator continue to glow when driving, this indicates a fault in the charging system which should be rectified without delay'

Hazard Warning Switch (5)

If the vehicle is immobilised and constitutes a hazard to other vehicles, warning may be given by using the "hazard warning system". To operate, pull the switch. All turn-signal lamps and the hazard warning monitor (6) will flash intermittently.

Tachometer (7) (Fig. 4)

The tachometer indicates engine speed in revolutions per minute and is calibrated in increments of 10 × 100, extending to 7,000 r.p.m. See page 13 for details.

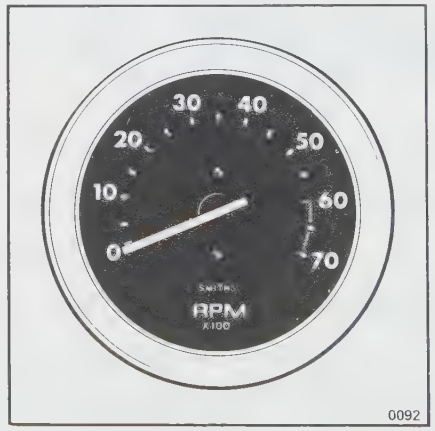

Fig. 4

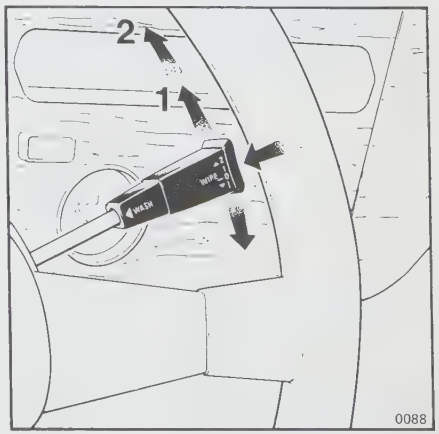

Fig. 5

Windscreen Wiper and Washer Control (8) (Fig. 5)

The control is effective only when the ignition is switched on.

For continuous operation of the two-speed wiper, move the control upwards to position '1' for slow-speed operation, or fully upwards to position '2' for high-speed operation. For brief use of the wiper, move the control downwards against spring pressure. Wiping will cease when the control is released.

To operate the windscreen washer, press the knob on the end of the control.

Seat Belt Warning Indicator (9)

A lamp and an audible warning system are actuated if an attempt is made to start the car without the seat belts in use. For full details of the system and the correct starting sequence, see page 12, "Running Instructions"

Air Distribution (10) See page 10

Fuel Gauge (11)

The fuel gauge indicates the contents of the fuel tank. When the ignition is switched "on" the needle moves slowly across the scale, taking up to one minute to reach a steady reading which is maintained regardless of vehicle movement, until the ignition is switched "off"

Light Switch (12)

To operate the three-position light switch:

1. Fully press the top of the switch bar to extinguish all external driving lamps.
2. Move the switch bar to its level position for illuminating the front and rear parking lamps and licence plate.
3. Fully press the bottom of the switch bar to illuminate all external drviing lamps.

Note. The back up lights are automatically operated when reverse gear is selected.

Temperature Gauge (13)

When the ignition is switched "on", the pointer moves slowly across the dial, taking up to one minute to reach a steady reading.

Normal operating temperature is reached when the pointer registers in the central sector of the dial. Should the pointer reach the highest mark, stop the engine immediately, allow it to cool and check the level of coolant in the radiator. Refer to page 11.

Heater Control (14) See Page 10

Brake-Line Failure/Handbrake Warning Indicator (15)

When the engine is cranked, with the handbrake off, the brake failure warning indicator will glow as a check that the bulb is functioning.

Should failure of the front or near brake lines occur, the indicator will glow, provided that the ignition remains switched on.

The indicator will glow when the handbrake is applied and the ignition is switched on.

CONTROLS, INSTRUMENTS AND INDICATORS

Cigar-lighter (16)

The lighter is operated by pushing its knob inwards to heat the element. When a predetermined temperature is reached, the element is ejected from the 'heat' position from whence it may be withdrawn for use. A small pilot lamp is incorporated within the element carrier to facilitate replacement of the element during darkness.

Map Reading Light (17)

An adjustable map reading light is positioned on the facia rail. The lamp is illuminated when the swivel is moved from the folded position and the instrument lighting circuit is operative.

Gear Selector Lever (6) (See Fig. 6)

Moving the gear selector lever from "neutral", the gear positions are selected as follows:

1st	Move lever left and forward.
2nd	Move lever left and rearward.
3rd	Move lever right and forward.
4th (Top)	Move lever right and rearward.
Reverse	Lift the lever, move it to the extreme right and forward. Engage reverse gear only when the vehicle is stationary.

For optimum fuel economy, the recommended gear change speeds are:
1st/2nd—15 mph
2nd/3rd—25 mph
3rd/4th—40 mph

Overdrive Unit (Optional fitment)

An overdrive unit serves as a convenient method of providing alternative gear ratios to reduce engine speed which with proper use can effect fuel economy.

Greatest benefit will occur from judicious use of the overdrive, the governing factor being that, when changing into overdrive, the vehicle continues to run easily without sign of engine labouring, combined with the minimum throttle opening necessary to maintain the same road speed. Maximum economies are affected under "highway" conditions.

The overdrive unit is remotely controlled by a slide switch, mounted on top of the gear selector lever. To engage the overdrive move the switch rearward which will reveal the word 'in'. Moving the switch forward will disengage the overdrive, indicated by the word 'out'. For optimum fuel economy during 'highway' driving the overdrive should be engaged at speeds over 45 mph and disengaged when the speed falls below 30 mph.

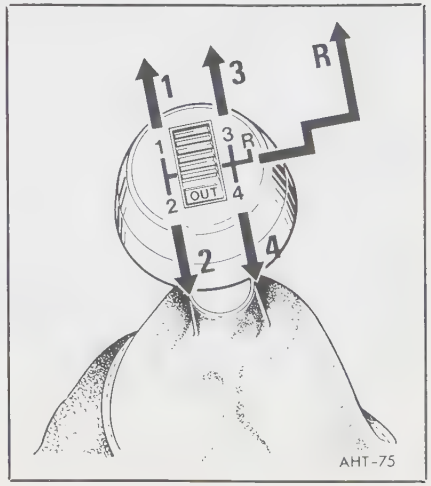

Fig. 6

Handbrake lever (19)

To apply the rear wheel brakes, pull the control lever upwards, where it is retained by a rachet and pawl. Release the hand brake by pulling the lever slightly upwards before depressing the button to free the pawl; then allow the lever to move downwards to the "off" position.

The brake-line failure/handbrake warning indicator will glow when the handbrake is applied, provided that the ignition switch is "ON".

Catalytic Converter Warning Light (20)—California specification only

Refer to page 35

Ignition, Starter and Steering Lock Switch

The combined ignition/starter/steering lock switch is operated by a special key.

Incorporated in the switch is an "Audible Alarm System". The alarm system is fitted to encourage the driver to remove the ignition key from the lock before leaving the vehicle. See 'Running Instructions'.

Accelerator, Brake and Clutch Pedals

These are conventional items which should require no further explanation.

SEATS AND SAFETY HARNESS

Access to the area behind the seats may be gained by lifting lever (1) (Fig. 1) to release a self locking catch, thus enabling the seats to be tilted forward.

Seat Adjustment (Fig. 1)

Fore and aft sliding adjustment is obtained by moving outwards and holding against spring pressure a lever (2) thus permitting the seat to be positioned as required. Releasing the lever allows a locking pawl to engage in the nearest locking notch. To achieve this however, slight additional movement of the seat may be necessary.

To adjust the seat squab for rake, raise and hold the lever (3) whilst using controlled body pressure, move the squab to the desired position. Releasing the lever will lock the squab at the chosen angle. The squab, if unrestrained, will return to the vertical position when the locking lever is raised.

Head restraint

The head restraint should be adjusted to support the head and not the neck.

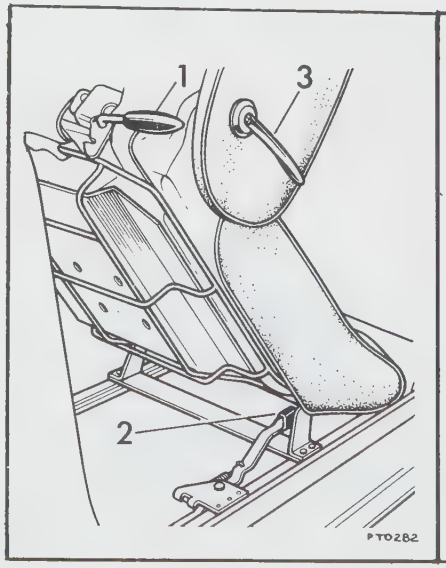

Fig. 1

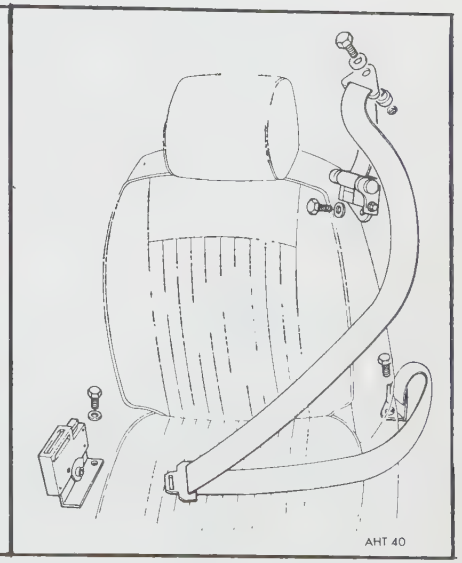

Fig. 2

Description of Inertia Reel Type Harness

One end of the harness is attached to a self-retracting inertia reel-tmounted outboar and behind the wearer. The harness passes through a 'running-eye' atached to the rear wheel arch and a locking buckle before returning to a fixed point on the vehicle floor.

The harness is prevented from unreeling when rapid deceleration of the vehicle causes the displacement of a heavy steel ball. This tilts a pivoting plate which applies a positive lock to the reel mechanism.

The harness is self-retracting. A belt parking hook is provided below each door opening.

Cleaning

An occasional wipe with a warm soapy sponge will keep the harness clean. Do not use bleach or dyes otherwise the efficiency of the harness may be affected.

Using the Harness (Fig. 2)

While seated, pull the locking buckle away from the door pillar until a loop is formed and pass the arm nearest the door through the loop. Continue pulling the harness over the hips until the buckle can be inserted into the buckle unit mounted to the transmission tunnel between the seats. A positive 'click' ensures that the harness is safely locked.

To release the harness, depress the release button, when the harness tongue will automatically disengage from the buckle unit and retract towards the door pillar.

To obtain the maximum designed protection from the safety harness it is essential that it is properly fitted over the body. The lap strap should be placed so that it rests securely over the bony part of the hips. The shoulder strap should pass over the shoulder and diagonally downwards across the body. No adjustment is required as the automatic retraction of the reel retains the harness at the correct tension.

In its normal fitted position the reel will allow the harness to extend and retract to permit normal body movement without locking but will lock automatically in the event of emergency braking.

Inertia Reel Mechanism Check

Every 10,000 km (6000 miles), carry out the following road check to ensure that the safety harness inertia reel mechanisms for both driver and passenger continue to operate satisfactorily.

IMPORTANT. Road tests must only be carried out under maximum safe road conditions, i.e. on a dry, straight, traffic free road.

With the safety harness fitted to driver and passenger as previously described, drive the car at 5 mph; ensuring that it is safe to do so, brake sharply.

The safety harness should automatically lock, holding both driver and passenger securely in position.

It is important when braking that the reaction of both driver and passenger is normal, i.e. the body must not be thrown forward in anticipation, thus causing a 'snatching' action of the reel which will not operate the locking mechanism. The harness is locked by retardation of the car, not by body movement.

NOTE: The seat belt warning device will operate if an attempt is made to start the car without the seat belts in use; see page 12.

LOCKS AND KEYS

The car is provided with two sets of keys, comprising:

2. Ignition and steering column lock keys.
2. Door lock keys.
2. Luggage compartment lock keys.

CAUTION: The ignition and steering column lock key is supplied complete with an identification disc. This must not be mislaid since it provides the only record of the key. In the event of loss of keys the disc will have to be submitted to your selling dealer to obtain duplicates.

Door Locks (Figs. 1 and 2)

Both doors have anti-burst locks and are opened from the outside and inside by pulling remote control levers.

To lock the doors from the outside, close the door, insert the appropriate key and turn it a quarter turn towards the front of the car. Turning the key a quarter turn towards the rear of the car unlocks the door. To open the door pull the recessed lever (Fig. 1).

Both doors may be locked from the inside by moving button (A) (Fig. 2) forward. This condition is cancelled by pulling lever (B) to open the door orwhen the door is unlocked from the outside with the key.

Fig. 1

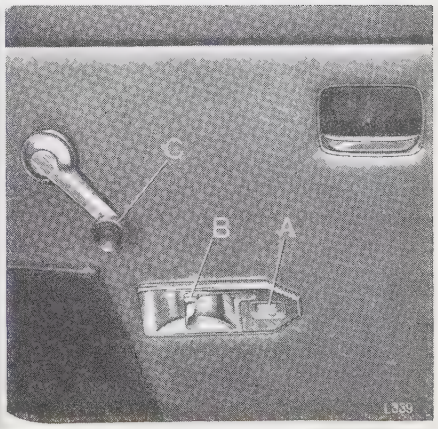

Fig. 2

Luggage Compartment Lock (Fig. 3)

To open the luggage compartment lid, pivot the lock cover plate (A) away as shown to expose the lock, insert the key and turn it clockwise to release the lock. Twist the turn button anti-clockwise and lift the lid to its limit before lowering it on to the telescopic support.

Close the lid by raising it slightly to release the catch in the support, lower the lid and when almost closed push down gently on the lid to engage the catch. Turn the key anti-clockwise to lock remove the key and pivot the cover plate over the lock to prevent ingress of dirt and moisture.

Bonnet Catch (Fig. 4)

The bonnet is opened by lifting a lever on each side to release the catches. Raise the bonnet from the rear until it is fully open and held by a folding strut. To close, pull the centre folding part of the strut while simultaneously supporting and lowering the bonnet. To fasten the catches press each lever flush with the side of the bonnet.

Fuel Filler Cap

The fuel filler cap located forward of the luggage compartment lid is opened by pressing a small lever at the side of the cap. Press the cap to close.

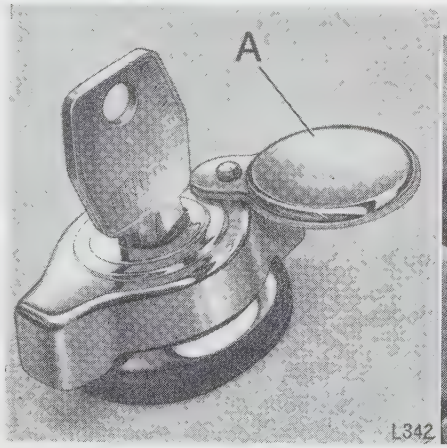

Fig. 3

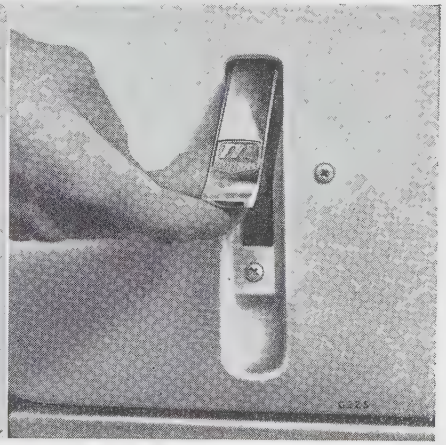

Fig. 4

SOFT TOP

The soft top is made from P.V.C. material, and is supported by a hinged frame. The assembly folds down into the rear of the car and is protected by a soft top cover.

Lowering the Soft Top

Unclip the fasteners securing the fabric to the centre and rear hoodstick (Fig. 1) and tilt the seats forward. Release the soft top header rail from the windscreen frame by turning the catch levers in the direction shown in (Fig. 2) and the fasteners (four each side Fig. 3) securing the edges of the hood to the body.

Push the soft top header rail rearwards and slightly upwards while knocking the second hoodstick forwards, until the assembly begins to fold. **DO NOT PULL the second hoodstick downwards.** Continue lowering the frame and pull the fabric flat over the luggage compartment lid (Fig. 4).

Fold the fabric forward over the hoodsticks and turn the sides inward (Fig. 5). Ensure that the Vybak windows are free from distortion and the hood fabric is not trapped by the hoodsticks.

Soft Top in the Down Position

Retain the soft top in position by fitting the cover (Fig. 6) as follows:

Attach the cover to the fasteners and continue working towards the centre and locate the three hooks (arrowed) on the cover under the bottom hoodstick.

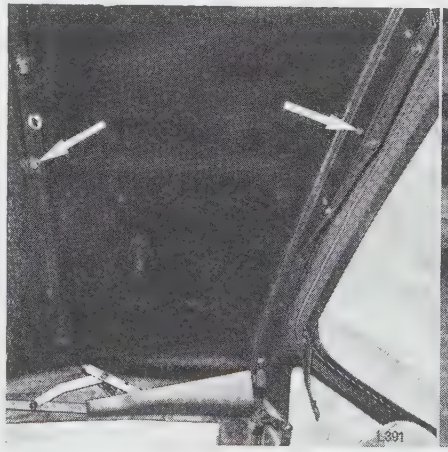

Fig. 1

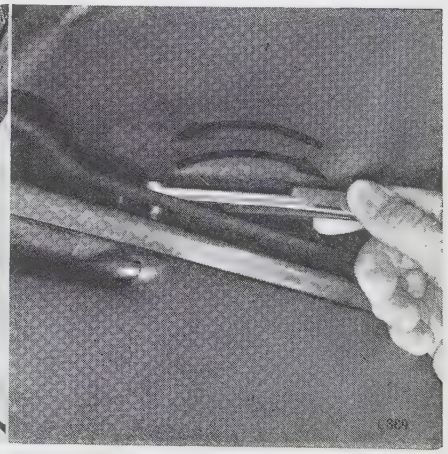

Fig. 2

Tonneau Cover (Optional) (Fig. 7)

The tonneau cover provides weather protection for the vehicle interior when the soft top is lowered. It incorporates press-studs for securing to the car and a zip fastener which permits access to either or both of the front seats.

Raising the Soft Top

Unfasten and remove the hood cover (Fig. 8). Fold the sides of the hood fabric outwards and pull the fabric rearwards over the luggage compartment lid. Lifting the soft top header rail, raise the assembly sufficiently to allow the fabric to lie evenly over the frame.

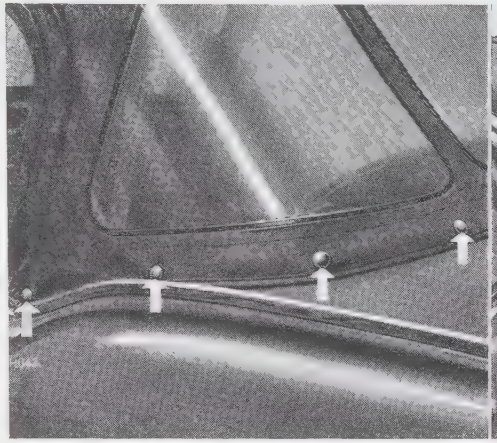

Fig. 3

Fig. 4

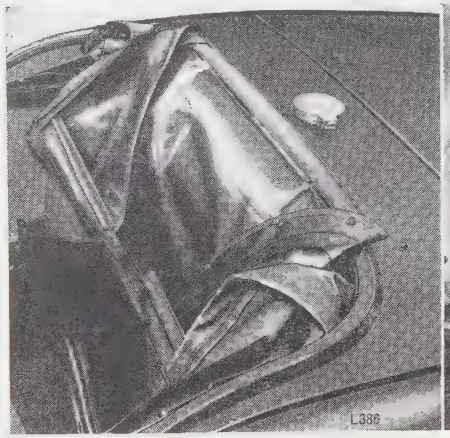

Fig. 5

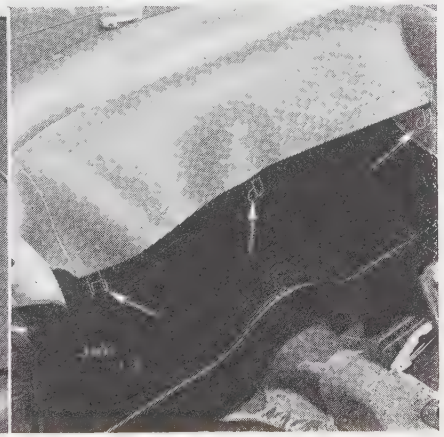

Fig. 6

Secure the fasteners (four each side, Fig. 3) to the body. Locate the soft top header rail on the windscreen header rail and turn the levers (Fig. 2) inwards. Knock the centre hoodstick rearwards as far as possible, and secure the fasteners (Fig. 1).

Opening Rear Window (Fig. 9)

To open the rear window, release the zip-fastener and roll the Vybak panel downwards. Retain the rolled panel in position by attaching the straps to the press fasteners located on the back wall of the rear compartment.

Rear View Mirror

The fully adjustable interior mirror mounted on a break-away support may be dipped to reduce glare from following vehicles. To operate the dipping mechanism move the catch rearward.

If, through impact, the mirror stem is pulled out of the mounting, it may be replaced by dismantling the mounting block from the header rail.

Sun Visors (Fig. 7)

Two adjustable sun visors (arrowed), padded to reduce the risk of impact injury, are fitted. The passenger's sun visor combines a vanity mirror.

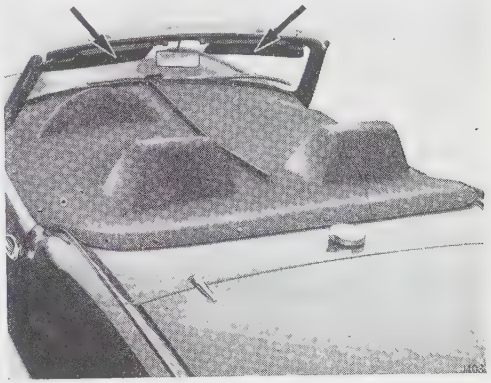

Fig. 7

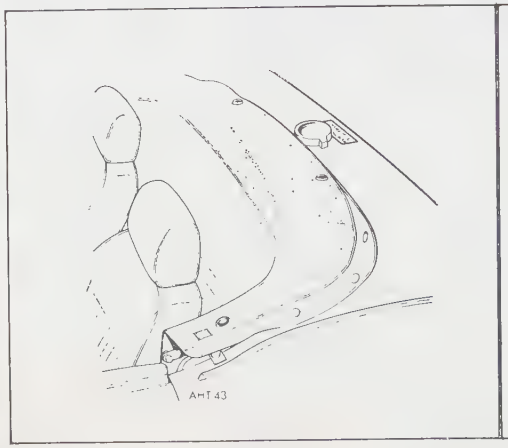

Fig. 8

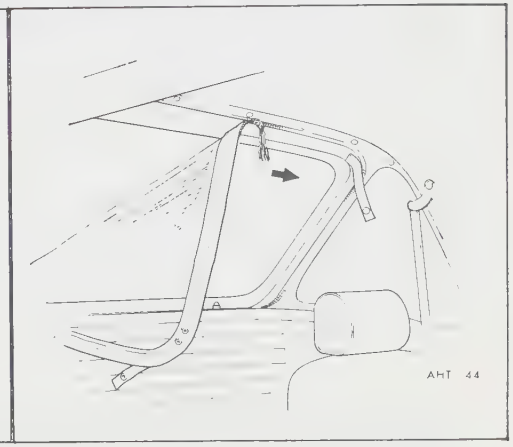

Fig. 9

HARD TOP (Optional)

The vehicle may be used as an open sports car by removing the hard top assembly as follows:

Unscrew the domed-head bolts securing the hard top side brackets to the door pillar brackets (A) (Fig. 10).

Remove the domed-head bolts and washers securing the hard-top to the windscreen header rail (Fig. 11) and the rear deck panel (Fig. 12).

With the aid of an assistant carefully lift off the hard top assembly.

To refit the hard top, reverse the foregoing procedure.

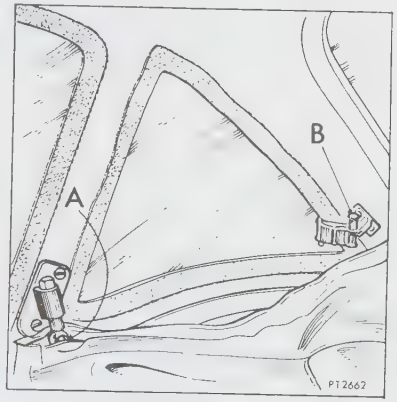

Fig. 10

Fig. 11

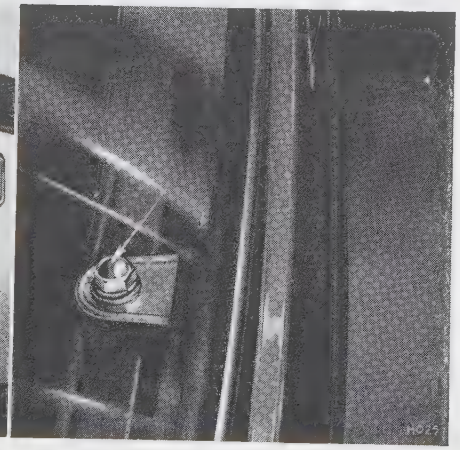

Fig. 12

HEATING AND VENTILATING SYSTEM

The unit provides air, heated by coolant from the engine cooling system or at outside (ambient) temperature. Two facia-mounted controls and a booster fan enable the volume, distribution, and temperature of the air to be varied. Full heat output of the heater unit is not available until the engine has reached normal operating temperature.

Air Distribution Lever

Air enters the intake grille forward of the windscreen and is directed as required by setting the lever 'A'. Moving the lever to the extreme left (position '1'), directs air to the footwells. Moving the lever to a mid-position '2', which is indicated by a detent in the quadrant, directs all air to the screen. Moving the lever to the extreme right (position '3') shuts off the air supply from the intake grille.

Air Temperature Lever

The lever 'B' operates a valve which governs the flow of coolant through the heater element. When the lever is at position '1' (cold), the valve is closed. Progressive movement of the lever towards the left opens the valve to permit an increasing volume of coolant to flow through the heater element until maximum is reached at position '2' (hot).

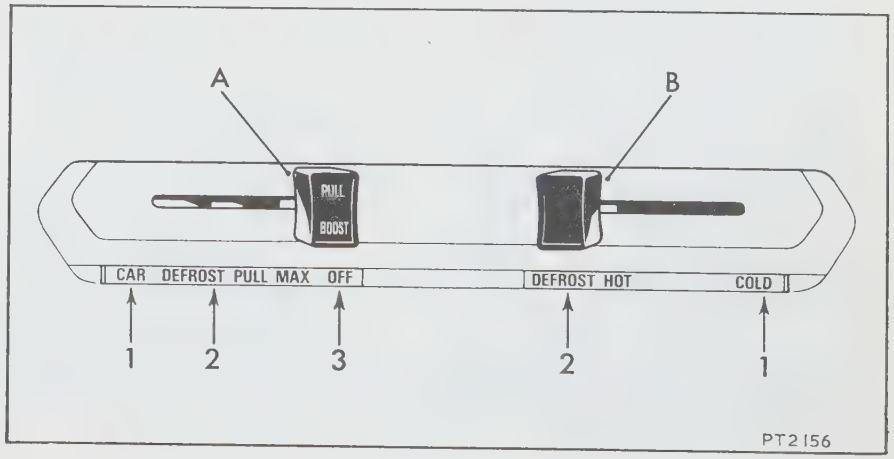

Fig. 1

Booster Fan

The two-speed booster fan, controlled by a knob on lever 'A', may be used to increase the flow of heated or unheated air to the footwells or screen. For slow-speed operation pull out the knob to its first position (indicated by a spring-loaded detent), or pull fully out for high-speed operation. To switch off push the knob fully in.

Lever Settings

To turn heating system off—Place lever (A) in the 'off' position and lever (B) to 'cold'.

Cold air ventilation—Move lever (A) to 'car' and lever (B) to 'cold'. Operate booster fan to increase air flow if required.

Warm air ventilation—Place lever (A) to 'car' and lever (B) to 'hot' and if necessary operate booster fan.

Windscreen defrosting—Move lever (A) to 'screen' and lever (B) to 'hot'. Increase air flow by operating booster fan

Additional ventilation is available by lowering the side window by turning the handle (C) (page 7). When the optional hard top is fitted, the rear quarter lights may be opened by pulling the catch (B) (page 10) forward.

COOLING SYSTEM

The pressurised "no loss" cooling system incorporates a translucent overflow reservoir, mounted forward of the radiator, which collects excess coolant from the radiator as the coolant in the system expands with heat. Depression created as the system cools, causes the coolant to flow back from the reservoir into the radiator. The level which is visible through the translucent reservoir should be maintained as least half full when cold. (See Fig. 1).

Pressure Cap

A pressure cap on the radiator header tank permits a maximum pressure of 13 lb/in^2 (0.9 kg/cm^2) to build up within the system as engine temperature increases. This enables the system to operate at temperatures above the normal boiling point of coolant at atmospheric pressure. Because of this feature, **it is extremely dangerous to remove the cap from a hot engine** as the coolant will immediately boil when pressure is released. See 'WARNING' page 12.

Draining

Stand the car on level ground, move the heater control lever to 'HOT' and remove the pressure cap. Remove the cylinder block drain plug, slacken the bottom hose clip and disconnect the hose from the radiator.

Filling

Refit the bottom hose and cylinder block drain plug. Fill the radiator, fit the pressure cap and half-fill the expansion tank. Run the engine at approximately 1,000 r.p.m. for three minutes, stop the engine and top up the radiator.

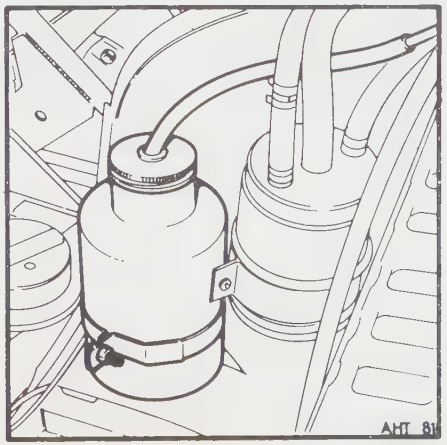

Fig. 1

Frost precautions

The cooling system cannot be completely drained by the normal draining procedure. Therefore frost damage will not be prevented by merely draining the system which should be protected by use of anti-freeze additives.

Anti-freeze can remain in the cooling system and will provide adequate protection for two years provided that the specific gravity of the coolant is checked periodically and topped up with new anti-freeze as required.

After the second winter the system should be drained and thoroughly flushed by using a hose inserted in the radiator filler orifice. Before adding new anti-freeze examine all joints and renew defective hoses to make sure that the system is leak proof.

At the lower limit of protection, a mixture of water and anti-freeze will reach a 'mushy' state with a viscosity that can impair circulation and immobilize or damage the water pump. Therefore, consult the following chart for quantities of anti-freeze required to protect the system at temperatures likely to be encounted.

WARNING: To avoid injury from scalding when removing the pressure cap from a hot engine, exercise great care by protecting the hands against escaping steam. Slowly turn the pressure cap anti-clockwise until resistance of the safety stop is felt. Leave the cap in this position until all pressure is released. Press the cap downwards against the spring to clear the safety stops, and continue turning until it can be lifted off. See 'Pressure cap', page 11.

ANTI-FREEZE CONCENTRATION		25%	30%	35%	50%
SPECIFIC GRAVITY OF COOLANT AT 15.5°C (60°F)		1.039	1.048	1.054	1.076
ANTI-FREEZE QUANTITY	PINTS U.S.A.	2.0	2.4	2.8	4.0
DEGREE OF PROTECTION	**Complete** Car may be driven away immediately from cold	−12°C 10°F	−16°C 3°F	−20°C −4°F	−36°C −33°F
	Safe Limit Coolant in mushy state. Engine may be started and driven away after short warm-up period	−18°C 0°F	−22°C −8°F	−28°C −18°F	−41°C −42°F
	Lower Protection Prevents frost damage to cylinder head, block and radiator. Thaw out before starting engine	−26°C −15°F	−32°C −26°F	−37°C −35°F	−47°C −53°F

RUNNING INSTRUCTIONS

Seat Belt Warning System.

Your Triumph is fitted with a seat belt warning system which may save lives by encouraging the use of seat belts.

The purpose of the system is to warn you both audibly and visually to wear your safety belt whilst driving the car.

A seat belt warning light, located on the facia, and an electric buzzer will operate for a maximum period of 8 seconds when the ignition is switched on, if the driver's seat belt is not coupled.

Immediately the belt is coupled the buzzer will cease to operate, but the warning light will remain illuminated for the full 8 seconds.

Preparing to Drive

When seated in the car with the seat belts fastened it is good practice to check the gauges and warning lights before driving off.

There are four switch positions which need to be understood for the correct operation of the combined switch (see Fig. 1).

Symbol 0 "OFF" only in this position may the key be inserted or withdrawn (see Audible alarm system).

Symbol I "Auxiliary", in this position the ignition circuit is isolated to allow the use of a radio when the vehicle is stationary and the ignition is switched off.

Symbol II "Ignition", all ignition controlled circuits energised.

Symbol III "Start". This key position actuates the starter motor and when released the key returns under spring pressure to Position II.

Do not operate the starter for longer than five to six seconds and wait until the engine has stopped before re-using the starter. If after a few attempts the engine fails to start, switch off the ignition and investigate the cause. Continued use of the starter will not only discharge the battery but may also damage the starter.

Audible Alarm System

The Audible Alarm System functions when the ignition key is positioned in the switch and the driver's door is open. The "warning" denoted by a continuous buzzing sound will terminate when the driver's door is closed or the ignition key is completely removed.

To Disengage Steering Lock and Start Engine

Insert the key and turn it in a clockwise direction. If difficulty is experienced in turning the key, this can be rectified by simultaneous movement of the steering wheel.

Turn the key clockwise to symbol II (Ignition). The ignition will be switched on.

To start the engine, the key should be turned a little more agianst spring pressure to symbol III ("Start"). As soon as the engine fires, release the key, which will return automatically under spring pressure to the "Ignition" position (symbol II).

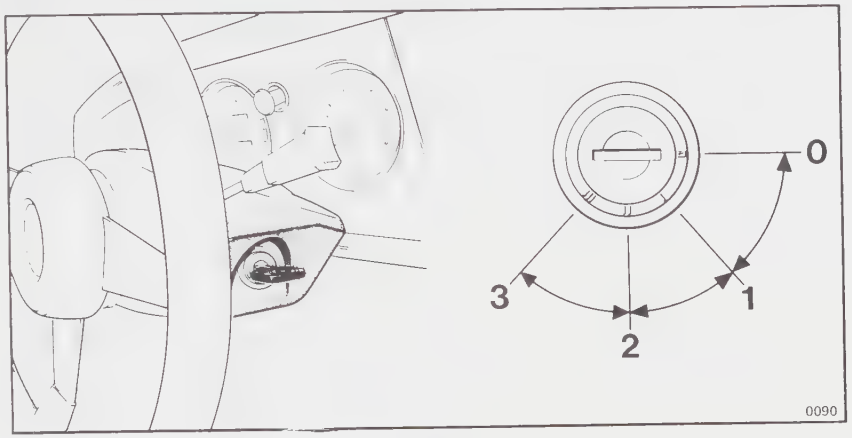

Fig. 1

To Stop Engine and Engage Steering Lock

Turn the key in an anti-clockwise direction from the "Ignition" position (symbol II) to the "Lock" position (symbol 0). This action stops the engine.

Removal of the key in this position automatically actuates the steering lock mechanism. (See Audible Alarm System.) Slight movement of the steering wheel may be necessary to ensure that the lock bolt is fully engaged.

WARNING: If, for any reason, the (ignition) engine is switched off while the car is in motion DO NOT ATTEMPT TO TURN THE KEY INTO THE "LOCK" POSITION O, as this constitutes part of the locking sequence.

Starting Procedure

Depress the throttle pedal fully and release. Crank the engine until it fires and runs DO NOT touch the throttle during this operation.

As soon as the engine is running, pump the throttle in order to set the choke in its correct running position.

Running-in

The importance of correct running-in cannot be too strongly emphasised, since during the first few thousand miles of motoring all working surfaces of the vehicle are bedding down.

Avoid placing heavy loads upon the engine, such as using full throttle at low speeds or when the engine is cold. Running-in should be progressive and no harm will result from the engine being allowed to "rev" fairly fast for short periods provided that it is thoroughly warm and not pulling hard. Always select a lower gear if necessary to relieve the engine load. Full power should not be used until at least 1,000 miles (1600 km.) have been covered and even then, it should be used only for short periods. These periods can be extended as the engine becomes more responsive.

Maximum Engine Speeds

After 'running-in' a vehicle it is still advisable to keep engine speed at reasonable levels and only use the high engine speeds when necessary. Maximum power is being produced at around 5,000 rev/min. and although it is permissible to run at 6,000 rev/min. on no account should this figure be exceeded. The red segment on the tachometer is warning against this.

WHEELS AND TYRES

General

Wheels and tyres, of correct types and pressures, are an integral part of a vehicle's design. Thus the regular maintenance of the tyres contributes not only to the safety but to the designed functioning of the vehicle, as road holding steering and braking are especially vulnerable to the use of incorrectly pressurised, badly fitted or worn tyres

Radial-ply and Cross-ply Tyres

It is dangerous to use, on the public highways, a vehicle fitted with unsuitable combinations of tyres. The following recommendations should therefore be observed.

1. Do not mix radial-ply and cross-ply tyres on the same axle.

2. Do not fit radial-ply tyres to the front wheels and cross-ply tyres to the rear wheels.

3. With suitable tyre pressure adjustments it may be possible to obtain acceptable handling with cross-ply tyres on the front wheels and radial-ply tyres on the rear wheels, but this combination is not recommended.

Tyre Wear

To prolong tyre life, avoid severe braking, sudden changes of direction at speed, and driving over or against high kerbstones, as this can result in severe damage to the tyre walls. Clean off any soil or grease which may be on the tyres by using cloth moistened in a suitable cleaner.

Fins on the inside or outside of the pattern ribs indicate excessive toe-in or toe-out respectively. Because sharp pattern edges may also be caused by road camber, it is better to make sure by having the track checked.

"Spotty" tread wear or flats can result from grabbing brakes or unbalanced wheel assemblies. The original degree of balance is not necessarily maintained, but may be affected by uneven tread wear, repairs, tyre removal and refitting, or by wheel damage and eccentricities. The vehicle may also become more sensitive to unbalance due to normal wear of moving parts.

Pressures

Adjust tyre pressures in accordance with the recommendations given below. These pressures are satisfactory for sustained speeds up to 113 mile/h. (180 km/h.).

NOTE: Should the vehicle be tuned to increase its maximum speed, or be used for racing, consult the respective tyre company regarding the need for tyres of full racing construction.

Adjust the pressures whilst the tyres are cold, *i.e.* before a run. As tyres warm up, their pressures increase. A warm tyre bled to the recommended pressure will be under-inflated when cold.

Recommended Tyre Pressures

Tyre Size and Type	FRONT	REAR
	lb/in² (kg/cm²)	lb/in² (kg/cm²)
155SR13 Radial ply Dunlop SP68, Goodyear G800 Custom rib	21 (1·47)	26 (1·83)

Spare Wheel, Tools and Lifting Jack

A spare wheel, lifting jack and handle together with a tool kit are located in the luggage compartment. The spare wheel is secured by a nut and may be released using the wheel nut box spanner and tommy bar supplied in the tool kit.

Using the Jack (Fig. 1, page 15)

In the interests of safety, place the jack under the body mounting bolt at the corner of the chassis nearest to the wheel being lifted. Make sure that the jack lifting pad is square on the chassis and the base stands firmly on the ground. Before lifting the car, ensure that the handbrake is firmly applied and sucurely chock the wheel diagonally opposite the one being lifted.

Repairs to Tubeless Tyres

A temporary repair can be made to tubeless tyres using a special kit, provided the puncturing hole is small and confined to the central tread area The following precautions must, however, be observed.

1. Do not use more than one plug in each hole.
2. Do not use the tyre for high speeds.
3. Ensure that a permanent "cold patch" or vulcanised repair is made at the earliest opportunity.

Wheels Changing Procedure

1. Firmly apply the handbrake and chock the wheel diagonally opposite the one being lifted.
2. Remove the spare wheel from the luggage compartment and make sure that its tyre pressure is correct.
3. Using the wheel nut spanner, slightly slacken the wheel nuts (Fig. 2).
4. Place the jack in position and lift the wheel clear of the ground. (Refer to "Using the Jack", page 14.) Should it be necessary to lift the vehicle on sloping ground, exercise the greatest care.
5. Remove the wheel nuts, hub trim and lift off the wheel
6. Fit the spare wheel together with the hub trim and replace the wheel nuts. Tighten the wheel nuts evenly taking care not to trap the hub trim.
7. Lower the wheel and remove the jack.
8. Tighten the wheel nuts securely and press the hub trim (which should rock on its springs) to ensure that the wheel nuts are correctly positioned.

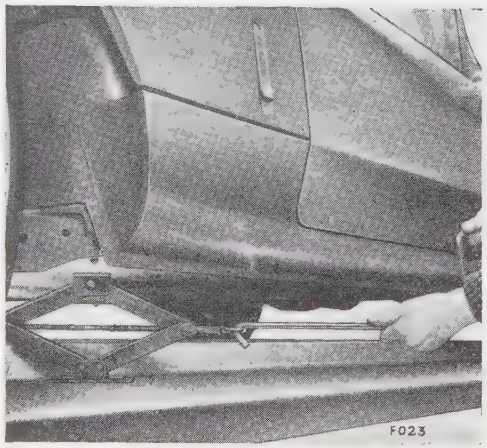

Fig. 1

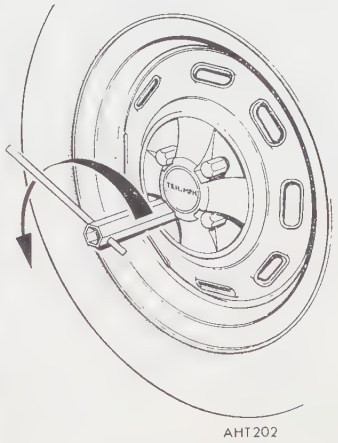

Fig. 2

ELECTRICAL SYSTEM

BULB CHART

Lamp	Watts	Lucas Part No.	Stanpart No.	
Headlamps—R.H. Dip—U.S.A. ..	50/40	54522231		*
France ..	45/40	411	510219	
Other R.H. Dip markets	60/50	54523079	215735	*
L.H. Dip	60/45	54521872	512231	*
Front parking lamps	5	207	57591	
Front flasher lamps	21	382	502379	
Front marker lamps	4	222	501436	
Rear marker lamps	4	222	501436	
Tail/stop lamps	5/21	380	502287	
Rear flasher lamps	21	382	502379	
Reverse lamp	22	382	502379	
Plate illumination lamp	5	207	57591	
Instrument illumination	2·2	987	59492	
Courtesy light	2·2	987	59492	
Warning lights	2·2	987	59492	
Seat belt warning light	2	281	513000	
EGR.	2	281	513000	
Catalytic converter	2	281	513000	
Wipe/Wash ident.	2	281	513000	
Hazard	2	281	513000	
Brake	2	281	513000	

* Sealed beam light unit

KEY TO 1975 WIRING DIAGRAM — LEFT-HAND STEER

CAUTION: THIS VEHICLE IS FITTED WITH A NEGATIVE EARTH ELECTRICAL SYSTEM. ENSURE THAT THE BATTERY EARTH LEAD IS ALWAYS CONNECTED TO THE BATTERY NEGATIVE TERMINAL.

THE ALTERNATOR—AND POSSIBLY SOME ACCESSORIES—CONTAIN POLARITY SENSITIVE COMPONENTS THAT MAY BE IRREPARABLY DAMAGED IF SUBJECTED TO INCORRECT POLARITY.

1. Alternator.
2. Ignition warning light.
3. Battery.
4. Ignition starter switch.
5. Radio supply.
6. Starter solenoid.
7. Starter motor.
8. Ballast resistor wire.
9. Ignition coil—6 volt.
10. Ignition distributor.
11. Tachometer.
12. Drive resistor.
13. Anti run on valve.
14. Oil pressure switch.
15. Oil pressure warning light.
16. Dual brake warning light.
17. Dual brake switch.
18. R.H. Seat switch.
19. R.H. Belt switch.
20. L.H. Seat switch.
21. L.H. Belt switch.
22. Seat belt warning light.
23. Ignition key contacts.
24. L.H. Door switch.
25. Services interval instrument.
26. S.I.I. Warning light.
27. Two speed heater motor.
28. Heater resistor.
29. Two speed heater switch.
30. Stop lamp switch.
31. Stop lamp.
32. Two speed wiper switch.
33. Two speed wiper motor.
34. Reverse lamp switch.
35. Reverse lamp.
36. Overdrive switch—optional.
37. Gearbox switch—optional.
38. Overdrive solenoid—optional.
39. Seat belt neutral switch.
40. Hazard switch.
41. Direction indicator warning light.
42. Hazard warning light.
43. Hazard flasher unit.
44. Direction indicator flasher unit.
45. Direction indicator switch.
46. L.H. Rear flasher lamp.
47. L.H. Front flasher lamp.
48. R.H. Front flasher lamp.
49. R.H. Rear flasher lamp.
50. Voltage stabilisor.
51. Fuel gauge.
52. Tank unit.
53. Temperature gauge.
54. Temperature transmitter.
55. Master light switch.
56. Map light.
57. Panel rheostat.
58. Panel illumination.
59. L.H. Front parking lamp.
60. R.H. Front parking lamp.
61. L.H. Front side marker.
63. R.H. Front side marker.
63. L.H. Rear side marker.
64. L.H. Tail lamp.
65. Plate illumination lamp.
66. R.H. Tail lamp.
67. R.H. Rear side marker.
68. Headlamp flash/dip switch.
69. L.H. Dip beam.
70. R.H. Dip beam.
71. L.H. Main beam.
72. R.H. Main beam.
73. Main beam warning light.
74. Horn relay.
75. Horn.
76. Horn switch.
77. Boot lamp.
78. Boot lamp switch.
79. Ignition switch illumination.
80. L.H. Door switch.

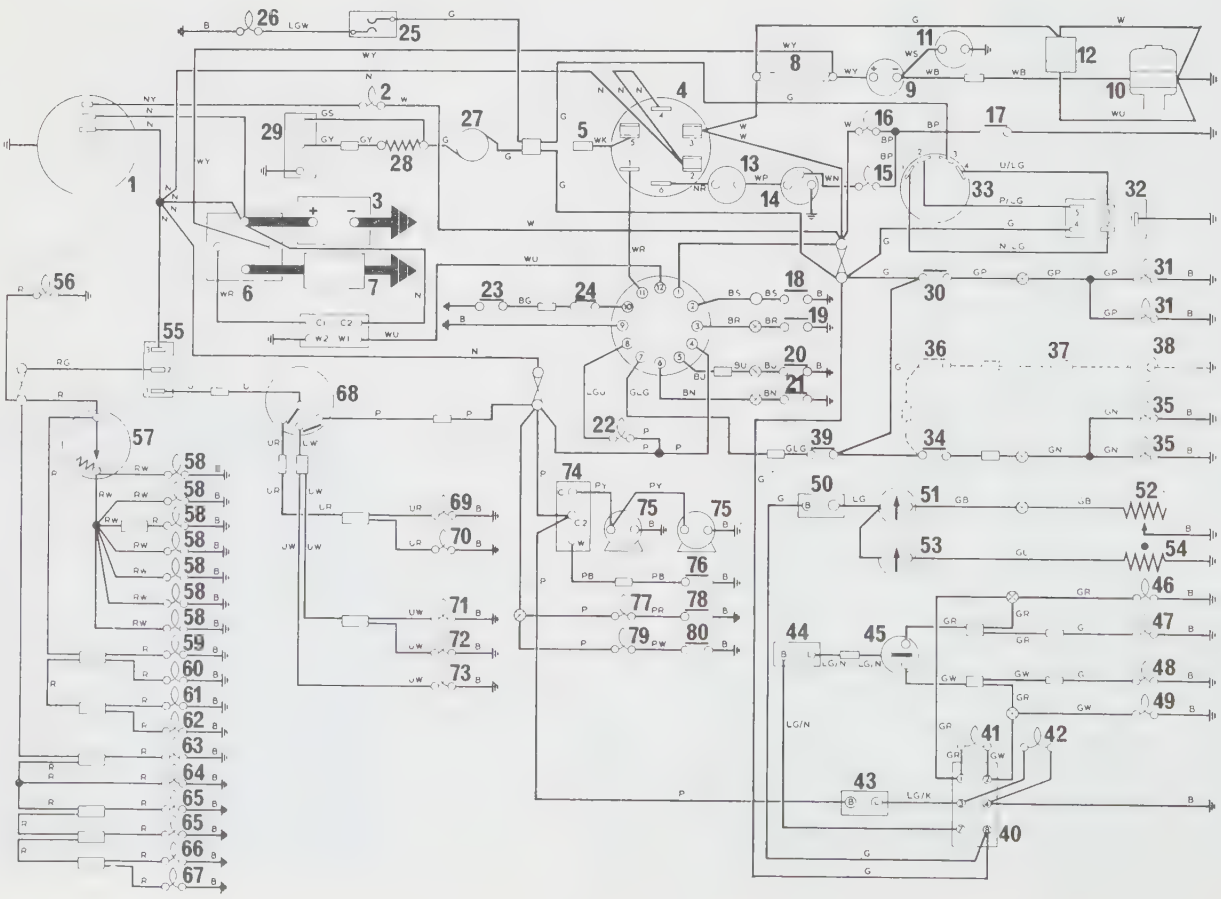

KEY TO 1976-1977 WIRING DIAGRAM — LEFT-HAND STEER

CAUTION: THIS VEHICLE IS FITTED WITH A NEGATIVE EARTH ELECTRICAL SYSTEM. ENSURE THAT THE BATTERY EARTH LEAD IS ALWAYS CONNECTED TO THE BATTERY NEGATIVE TERMINAL.

THE ALTERNATOR—AND POSSIBLY SOME ACCESSORIES—CONTAIN POLARITY SENSITIVE COMPONENTS THAT MAY BE IRREPARABLY DAMAGED IF SUBJECTED TO INCORRECT POLARITY.

1. Alternator.
2. Ignition warning light.
3. Battery.
4. Ignition starter switch.
5. Radio supply.
6. Starter solenoid.
7. Starter motor.
8. Ballast resistor wire.
9. Ignition coil—6 volt.
10. Ignition distributor.
11. Tachometer.
12. Drive resistor.
13. Anti run on valve.
14. Oil pressure switch.
15. Oil pressure warning light.
16. Dual brake warning light.
17. Dual brake switch.
18. Diode.
19. Buzzer unit.
20. L.H. Door switch.
21. Ignition key contacts.
22. Seat belt warning light.
23. Buckle switch.
24. Services interval instrument.
25. S.I.I. Warning light.
26. Two speed heater motor.
27. Heater resistor.
28. Two speed heater switch.
29. Stop lamp switch.
30. Stop lamp.
31. Two speed wiper switch.
32. Two speed wiper motor.
33. Screen washer motor.
34. Reverse lamp switch.
35. Reverse lamp.
36. Overdrive switch—optional.
37. Gearbox switch—optional.
38. Overdrive solenoid—optional.
39. Hazard switch.
40. Direction indicator warning light.
41. Hazard/flasher unit.
42. Direction indicator switch.
43. L.H. Rear flasher lamp.
44. L.H. Front flasher lamp.
45. R.H. Front flasher lamp.
46. R.H. Rear flasher lamp.
47. Voltage stabiliser.
48. Fuel gauge.
49. Tank unit.
50. Temperature gauge.
51. Temperature transmitter.
52. Master light switch.
53. Map light.
54. Panel rheostat.
55. Panel illumination.
56. L.H. Front parking lamp.
57. R.H. Front parking lamp.
58. L.H. Front side marker.
59. R.H. Front side marker.
60. L.H. Rear side marker.
61. L.H. Tail lamp.
63. Plate illumination lamp.
63. R H. Tail lamp.
64. R.H. Rear side marker.
65. Headlamp flash/dip switch.
66. L.H. Dip beam.
67. R.H. Dip beam.
68. L.H. Main beam.
69. R.H. Main beam.
70. Main beam warning light.
71. Horn.
72. Horn switch.
73. Boot lamp.
75. Boot lamp switch.
74. Ignition switch illumination.
76. L.H. Door switch.
77. Passenger light.
78. R.H. Door switch.

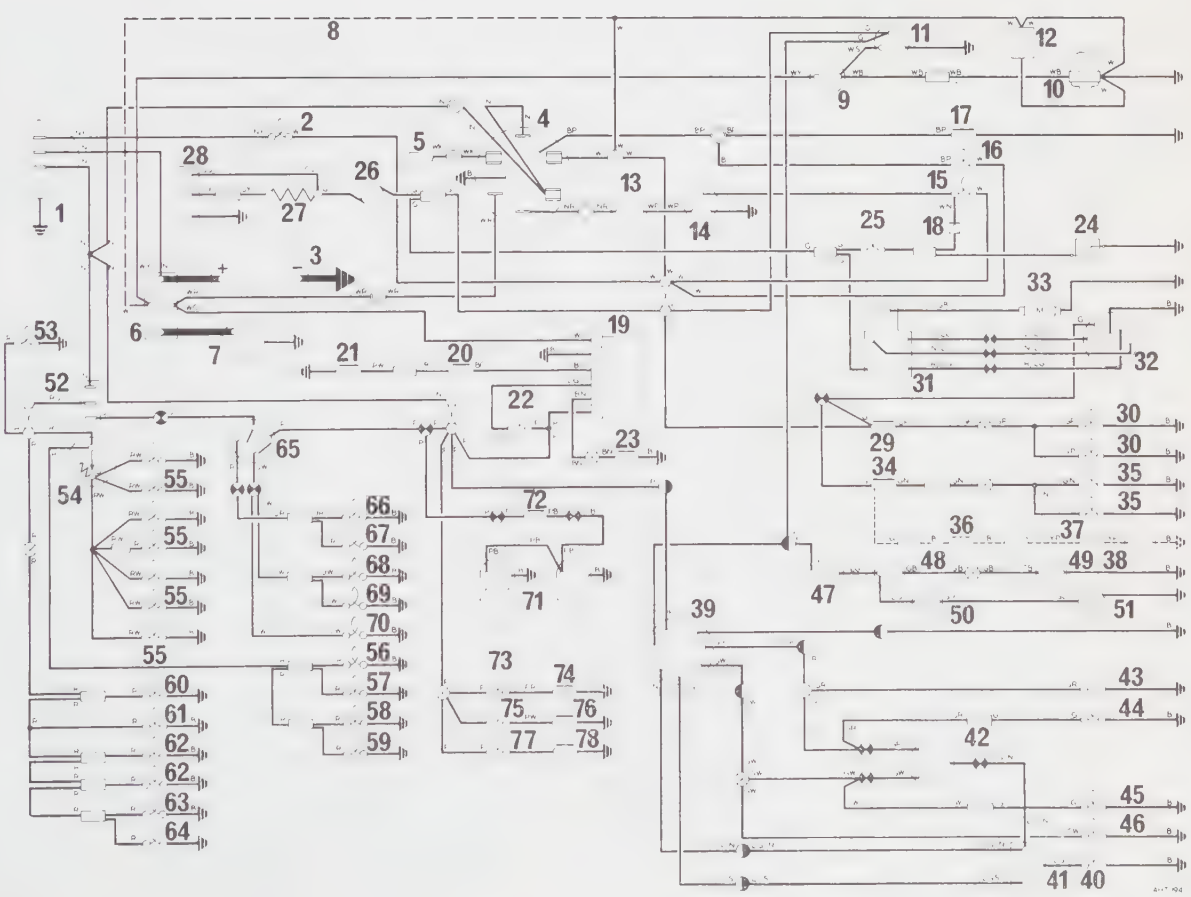

FUSE SYSTEM

The fuse assembly is a component of the main harness. It is secured to an aperture provided on the bulkhead by integral plastic clips. The unit contains three operational fuses and has provision to house two spares. The fuses are protected by a pull-off transparent plastic cover on the bulkhead adjacent to the clutch master cylinder.

Failure of a particular fuse is indicated when all the circuits protected by it become inoperative. If a new fuse fails establish the cause and rectify the fault before fitting a second replacement.

Circuits

The 35 amp fuse fed by a white cable from the ignition/starter switch protects the following circuits:

Windscreen wiper	Stop lamp	Seat belt warning
Fuel indication	Reverse lamp	
Temperature indication	Turn Signal	

The 10 amp fuse fed by a red/green cable from the master light switch protects the following circuits:

Front parking lamp	Rear marker lamp	Plate illumination lamp
Front marker lamp	Tail lamp	Instrument illumination

The 35 amp fuse fed by a brown cable from the battery protects the following circuits:

Headlamp flasher	Courtesy light	Hazard warning
Key warning	Horn	

RADIO FACILITY

The Spitfire 1500 is equipped with a radio aerial on the rear L.H. wing. The aerial is raised by lifting the protruding tip. Ensure that the aerial is lowered before using an automatic car wash.

The speaker unit is fitted in the R.H. parcel tray and, for good reception, ensure that it is not covered when using the radio. To operate the radio see the manufacturer's instructions.

CHARGING SYSTEM

CAUTION: THE ALTERNATOR CONTAINS POLARITY SENSITIVE COMPONENTS THAT MAY BE IRREPARABLY DAMAGED IF SUBJECTED TO INCORRECT POLARITY.

TO PREVENT DAMAGE TO COMPONENTS, DO NOT MAKE OR BREAK ANY CONNECTIONS IN THE CHARGING CIRCUIT —INCLUDING THE BATTERY LEADS—WHILE THE ENGINE IS RUNNING. RUN THE ALTERNATOR ONLY WITH ALL CONNECTIONS MADE OR WITH THE UNIT DISCONNECTED.

Alternator

The Lucas 16ACR alternator—which contains its own control unit—has a nominal output of 34 amps. The unit is driven by a vee belt which should be adjusted as detailed under Routine Servicing. The rotor runs on two "lubricated for life" ball bearings. No periodic lubrication is required.

BATTERY

Ensure that the battery top and terminals remain clean and dry. Coat the terminals with petroleum jelly (Vaseline) to prevent corrosion.

Check the electrolyte level monthly and if required replenish with distilled water as detailed in Routine Servicing. If electrolyte has been spilled, clean the affected area with a cloth moistened with ammonia to neutralise the acid and prevent acid corrosion.

Ensure that the battery is always firmly clamped in position by the retaining assembly. When fitting battery leads do not hammer the terminals to the terminal posts. Such action may damage the battery.

The battery will deteriorate rapidly if left in a discharged condition. If the unit is reduced to a low state of charge it should be recharged at the first opportunity.

HEADLAMPS

NOTE: IF BEAM AIMING IS NOT INTENDED DO NOT DISTURB BEAM AIMING SCREWS "A" AND "B"

Beam Aiming

It should be possible to adjust the beams without removing the headlamp surround. Screw "A" positions the beam in the horizontal plane. Screw "B" controls beam height.

Beam aiming can best be accomplished using equipment such as Lucas "Beam-setter" or "Lev-L-Lite". This service is available at British Leyland Dealers and will ensure maximum road illumination with minimum discomfort to other road users.

Filament Failure

Remove the two bolts (1 and 2). Remove the nut (3) and lift the headlamp surround from its upper retainers. Remove the three screws (4, 5 and 6) to release the retaining rim and light unit. Pull the connector from the sealed beam light unit or bulb. Renew the light unit or bulb and reassemble.

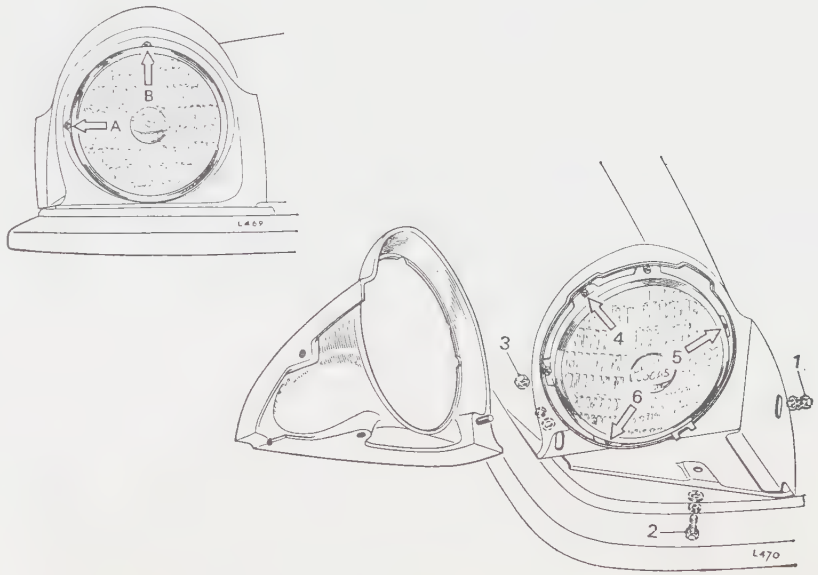

WINDSCREEN WIPERS

Renew wiper blade—Lift the wiper arm and blade from the screen so that it falls into its service position. Simultaneously lift clip (A), tilt cage (B), (Fig. 1) and gently pull the wiper blade from the arm.

Renew wiper blade and arm.

Removal—Position a screwdriver between the nut and boss and impart a twisting action, (Fig. 1). The clip will lift from the spindle groove and the assembly may then be removed by hand.

Refitting—Push a new blade assembly onto the spindle groove and locate it in the park position by lightly pressing the arm down towards the base of the windscreen. Insert a steel rule between the windscreen and wiper blade in order to establish the setting distance as shown in Fig. 2, page 20. If adjustment is necessary to comply with the dimension shown, the blade assembly should again be removed from the splined spindle and relocated to give the required setting dimension.

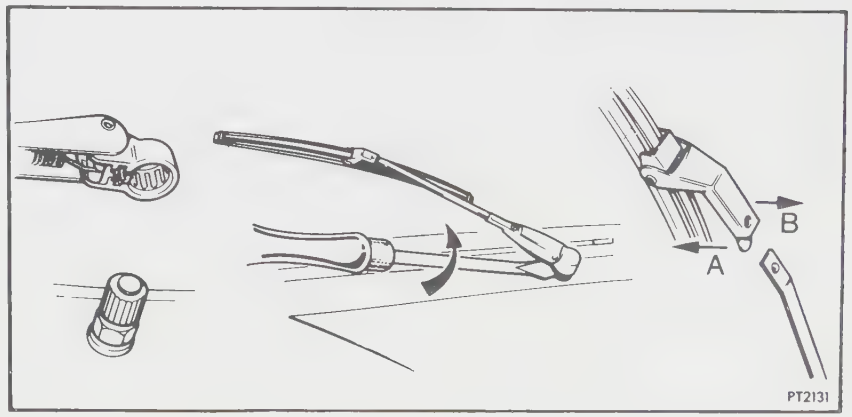

Fig. 1

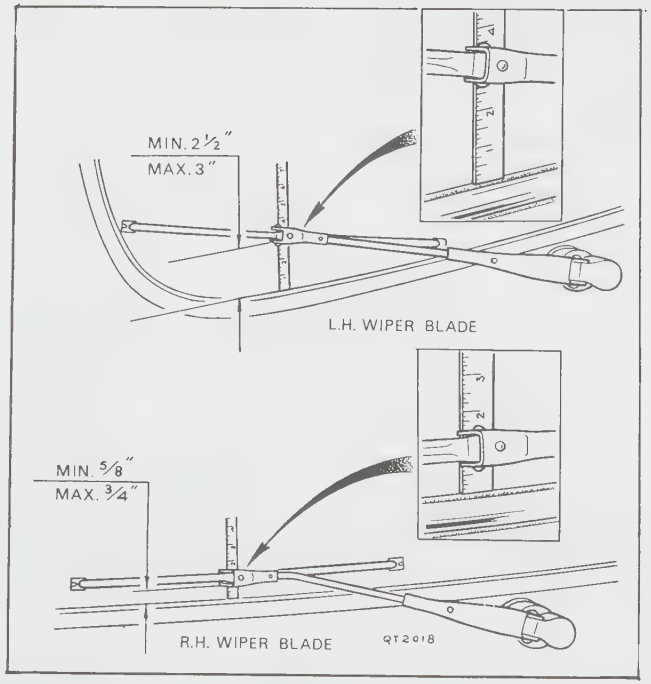

Fig. 2

ROUTINE SERVICING

PERIODIC CHECKS—WEEKLY

Engine (Fig. 1)

Once a week or prior to starting out on a long run, or every 250 miles (400 km.), check the level of oil in the engine sump, first making sure that the car is standing on level ground. If the engine has been running, wait a few minutes to allow the oil to drain back into the sump.

Withdraw the dipstick (1), wipe it clean and push it fully home before again withdrawing it for reading. Add oil via the filler cap (2) until the level reaches the high mark on the dipstick. **Do not overfill,** and ensure that the filler cap and dipstick are replaced.

Radiator Water Level

The level of water, visible through the translucent plastic reservoir, should be maintained at least "half full" by adding soft water, or anti-freeze mixture when required, via the screwed cap. Refer to "Filling" page 11.

Windscreen Washer (3) (Fig. 1)

Examine the water level in the plastic windscreen washer container. To refill the reservoir, hold the plastic tubing while unscrewing the cap. Fill with clean soft water to the bottom of the neck and replace the cap. If the wiper blades tend to smear, a little household detergent added to the water in the reservoir will help to prevent this.

To avoid frost damage during cold weather, either empty the reservoir or fill with a mixture of 1 part de-natured alcohol (methylated spirits) to 2 parts water. Do not use radiator anti-freeze as this will damage the paintwork.

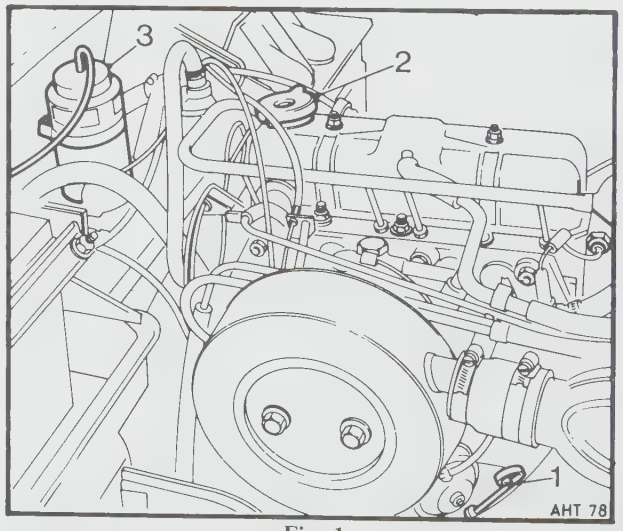

Fig. 1

Brake Master Cylinder (1) (Fig. 2)

Every week check the level of fluid in the brake master cylinder reservoir. The fluid level is visible through the translucent casing of the reservoir, **do not remove the cap.** A gradual lowering of the level over a long period is caused by brake pad wear and does not require topping-up. A sudden appreciable drop in the level must be investigated, the cause ascertained and rectified immediately.

Do not allow the level to drop below the danger line on the side of the casing.

To avoid dirt entering the system ensure that the reservoir is clean externally before removing the cap. Use only new fluid taken from a sealed container and re-seal the container after use. Replace the reservoir cap immediately after filling.

Clutch Master Cylinder (2) (Fig. 2)

Every week, check the level of fluid in the clutch master cylinder. To prevent dirt entering the system, clean the cap and surrounding area prior to removing the cap. Top-up the fluid until it is level with the line on the side of the reservoir.

Tyres

The maintenance of correct tyre pressures, tread thickness and freedom from cuts and other tyre damage is an important safety factor which affects the behavior of steering and suspension. It is, therefore, expedient to examine the tyres once a week and to ensure that pressures are maintained in accordance with the figures given on page 14.

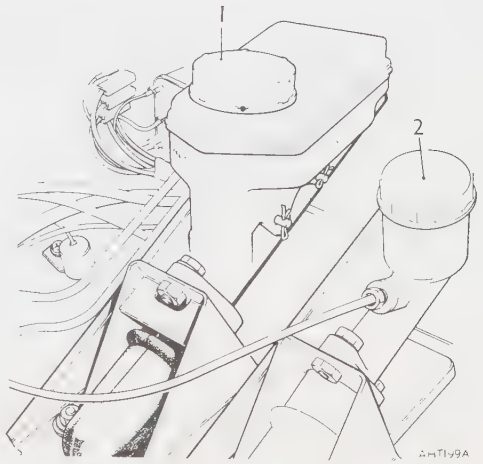

Fig. 2

PERIODIC CHECKS—MONTHLY

Battery (Figs. 3 and 4)

At periods not exceeding four weeks, examine the level of the electrolyte in the cells and top up with distilled water if necessary. The electrolyte level should just cover the separators. More frequent checks should be made during hot weather and if the car is subjected to long journeys.

IMPORTANT: Never use a naked flame when examining the battery since the mixture of oxygen and hydrogen given off by the battery is dangerously explosive.

When a Lucas "Pacemaker" battery is fitted the following topping-up procedure should be followed. Make sure the car is standing on level ground and lift and tilt the battery cover. If the electrolyte level is below the separators, add distilled water until the filling tubes are full and the trough is just covered. Replace the cover immediately.

Key to Fig. 4

1. Cover
2. Trough
3. Vent holes
4. Filling tubes
5. Separators
6. Vent cover raised, air lock created, filling tube full
7. Vent cover replaced, air lock broken, correct level indicated

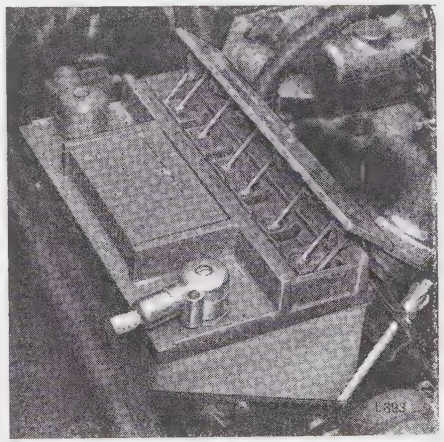

Fig. 3

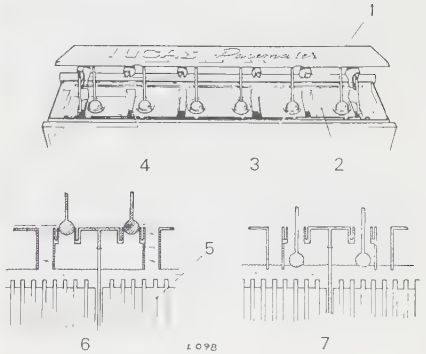

Fig. 4

Wheels

In addition to checking tyres each week, once a month examine the wheel stud threads for damage. Before replacing the nuts smear grease on the stud threads to resist wear and corrosion. Check the nuts for tightness.

Lights

Check operation of the headlamps and front and rear parking lights, including licence plate illumination lamp.

1,000 MILES FREE SERVICE

At the completion of 1,000 miles or as near to this figure as possible, it is important that the car is returned to the selling Dealer, who will complete, free of charge except for the cost of oil and grease, a free service.

The importance of carrying out this free service cannot be over emphasised, as it corresponds with the end of the running-in period when many of the components will have settled down, thus necessitating re-adjustment. Furthermore, the special running-in engine oil, used for the initial fill, is unsuitable for normal motoring and must, therefore, be replaced by the correct grade of oil.

SCHEDULED MAINTENANCE

In addition to the periodic checks listed on pages 20 and 21, perform the following operations at the intervals recommended in the "Maintenance Summary"

Air Cleaner (Fig. 5)

(a) Remove and clean the paper element (4). Do this more frequently where conditions of extreme dust prevail.

To gain access remove the clips from the air box, remove the intake pipe and remove the bolts (1) securing the unit to the carburettor intake flange. Detach the closing plate (5), lift out the element (4) and, using a low pressure air line or a soft brush, clean between the folds of the paper element.

Adopt the reverse procedure to refit, ensuring that the gasket (6) is in good condition and that the slots in the closing plate (5) and the gasket (6) align with those in the carburettor flange. Refit or renew the sealing rings (3).

(b) Remove and dismantle the air cleaner as described and renew the paper element.

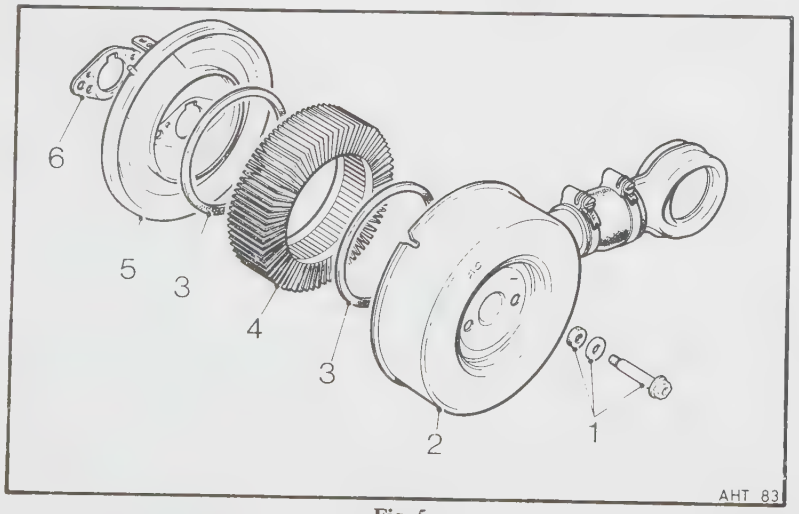

Fig. 5

Engine Oil Change (Fig. 6)

Changing the oil in the sump is best carried out when the engine is warm. Place a suitable receptacle under the drain plug (1) and unscrew the plug slowly until oil begins to escape. When the rate of flow lessens remove the plug completely and allow the oil to drain for a few minutes. Clean and refit the drain plug and refill the sump with the appropriate grade of oil (see page 40). More frequent oil changes are recommended if the car is used for short journeys during cold weather when the choke is used extensively.

Gearbox (Fig. 6) (and overdrive when fitted)

With the vehicle standing on level ground, remove the oil filler plug (2) and top up the gearbox until the oil is level with the bottom of the filler plug threads. Allow surplus oil to drain away before wiping clean and refitting the plug. An oil transfer hole between the gearbox and overdrive unit (when fitted) provides a common oil level. Maintenance of the overdrive unit is thus limited to ensuring that the correct oil level is maintained in the gearbox.

Final Drive (Fig. 7)

Remove the oil level plug (shown arrowed) and top up the final drive until the oil is level with the bottom of the filler plug threads. Allow surplus oil to drain before wiping clean and refitting the plug.

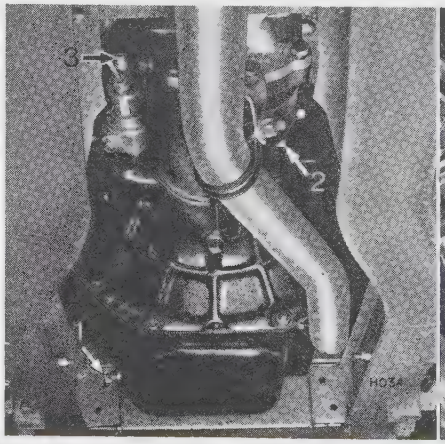

Fig. 6

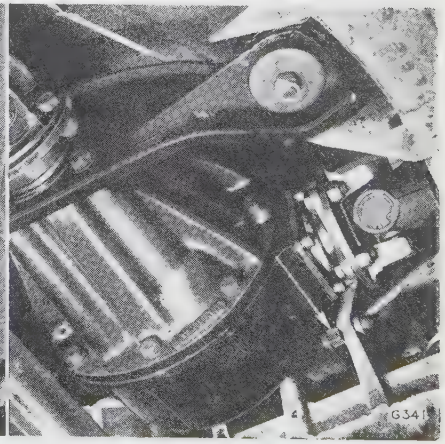

Fig. 7

Distributor (Fig. 8)

Release the retaining clips and remove the cover (1). Remove the rotor arm (2) and the anti-flash shield (3).

Lubrication (Fig. 9)

Add a few drops of oil to the felt pad (4) in the top of the timing rotor carrier.

Every 25,000 miles remove the anti-flash shield and lubricate the pick-up plate centre bearing with a drop of oil in each of the two holes (5) in the base plate. (Refer to Maintenance Summary).

Cleaning

With a clean nap-free cloth wipe the inside of the distributor cover, the rotor arm and the anti-flash shield. Refit the anti-flash shield ensuring that the cut-outs are aligned with the distributor cover retaining clips. Refit the rotor arm and the cover.

Adjustment of the distributor should be carried out by a British Leyland Dealer.

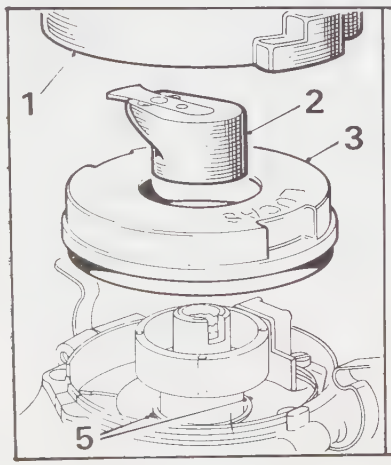

Fig. 8

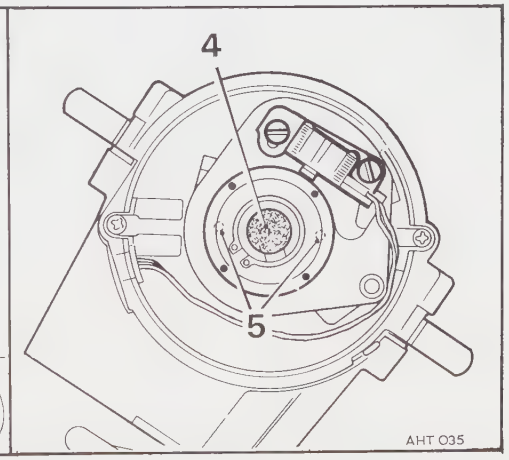

Fig. 9

IGNITION

Ignition timing

The ignition timing is set dynamically to give optimum engine performance with efficient engine emission control. Checking and adjustment of the ignition timing setting should be carried out by your British Leyland Dealer.

The ignition timing must be checked after cleaning or resetting of the pick-up.

Basic tuning data will be found on the Vehicle Emission Control Information Label located in the engine compartment.

Spark Plugs

At the recommended intervals, remove and discard the spark plugs. When fitting replacements, ensure that they are of correct type and that the gaps are set to 0.025 in. (0.63 mm). Reconnect the leads in the order shown in Fig. 10, page 24.

Plug Lead Position (Fig. 10)

Ensure that the plug leads are attached to the spark plugs as shown. Firing order is 1, 3, 4, 2, taken in anti-clockwise order, as viewed from the top of the rotor arm.

High Tension Cables

All high tension cables fitted to the ignition system are made from carbon impregnated nylon or cotton cords encased in rubber or neoprene to form a high resistive conductor. Replacement cables should be obtained from a British Leyland Dealer and must be the same length and type as the original.

Hydraulic Pipes

Trace the run of all hydraulic pipes and make sure they are not rubbing against the body or chassis. Check for leaks at the joints and examine the flexible hoses. Check that when the front wheels are turned from lock to lock the flexible hoses are not strained, kinked or rubbing. It is recommended that this check is carried out by your Dealer.

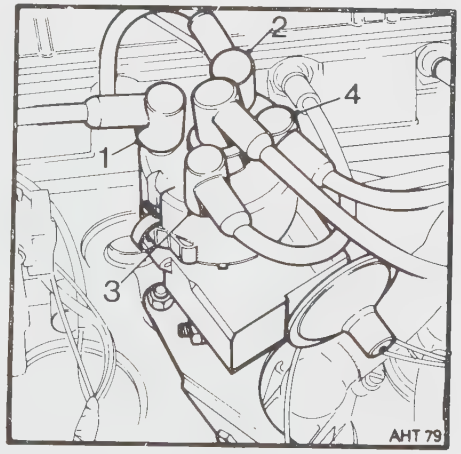

Fig. 10

Rear Brakes

Jack up the car. Remove the road wheel and brake drum. Examine the brakes shoes for wear. Renew worn or oil contaminated shoes. Examine the wheel cylinders for leaks and perished rubber boots. Using a high pressure air line or brush remove loose dust from the brake mechanism and use petrol to remove oil or grease from the back plate. Wipe clean the inside of the brake drum and avoid touching the braking surface with greasy hands. Adjust the brakes if necessary (see page 27).

Front Brakes

Jack up the front of the car, remove the road wheel and examine the brake pads for wear. Renewal is necessary when the lining material bonded to the steel backing plate is reduced to a thickness of 1/8 in. (3 mm). (Refer to page 27 for procedure.)

Fan Belt Adjustment (Fig. 11)

The fan belt should be sufficiently tight to drive the water pump and alternator without unduly loading the bearings.

To adjust the belt, slacken the pivot bolt nut (1) and the adjustment bracket bolt (2). Pivot the alternator away from the engine until the belt can be moved $\frac{3}{4}$ to 1 in. (19 to 25 mm.) at the mid-point of its longest run. Maintaining the alternator in this position, tighten the bolt (1) and nut (2).

Air Pump Belt Adjustment (Fig. 12)

The belt should be sufficiently tight to drive the air pump without unduly loading the bearings.

To adjust the belt slacken the two pivot bolts (2) and the adjustment bracket bolt (1). Pivot the air pump away from the engine until the belt can be moved laterally $\frac{1}{2}$ in. at the midpoint of its longest run. Maintaining the pump in its position, tighten all the bolts.

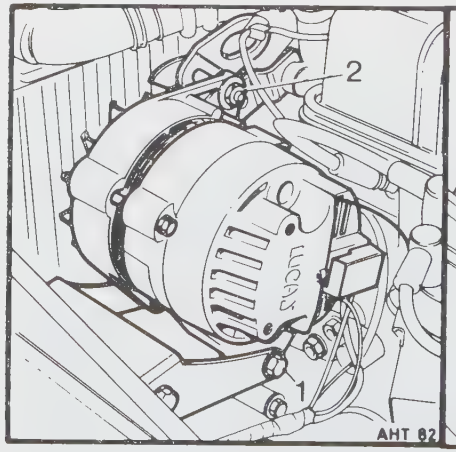

Fig. 11

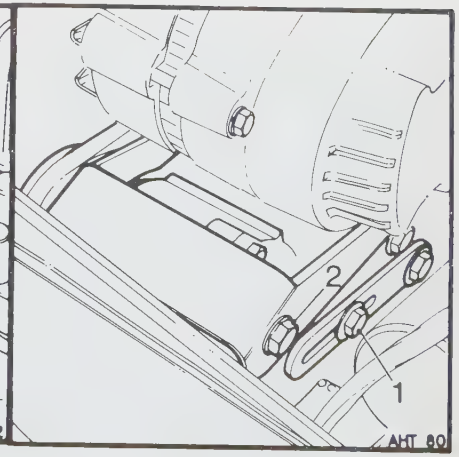

Fig. 12

Rocker Clearances

Adjust the valve rocker clearances, at the valve stem tips, to 0.010 in. (0.25 mm.) when cold, in the following sequence.

Adjust Nos. 1 and 3 valves with Nos. 8 and 6 valves open.
„ „ 5 „ 2 „ „ „ 4 „ 7 „ „
„ „ 8 „ 6 „ „ „ 1 „ 3 „ „
„ „ 4 „ 7 „ „ „ 5 „ 2 „ „

Evaporation System Adsorption Canister (Fig. 14)

Remove the adsorption canister as follows:—disconnect the three pipes from the top of the canister and the connection to the running-on control valve from the bottom. Remove the nut and bolt on the securing strap and lift out the canister. When fitting a new canister ensure that all connections are leak free and that no pipes are kinked.

Carburetter Damper (Fig. 13)

Using an oil can, apply oil to the throttle and choke control linkages and accelerator pedal pivot. Check that the carburetter slow running is correct (see page 43).

Topping up the oil level.

1. Slacken the carburetter air intake hose clip and detach the hose. Remove the two bolts with plain and rubber washers, securing the air cleaner to the carburetter. Lift off the air cleaner.
2. Remove the carburetter damper assembly from the carburetter by unscrewing the plastic plug in the top of the carburetter.
3. Raise the piston by inserting a finger into the carburetter air intake hole. With the piston raised, top-up the hollow damper guide with a recommended engine oil (see page 40), until the oil level is 1/4 in. below the top of the guide.
4. Release the piston and refit the damper assembly, screwing down the plastic plug.
5. To ensure correct location of the oil retaining cup in the damper guide, again raise and lower the piston.

   NOTE: A certain amount of pressure will be felt when lifting the piston, but it is essential that the piston is lifted to its maximum height to ensure correct location of the oil retaining cup.

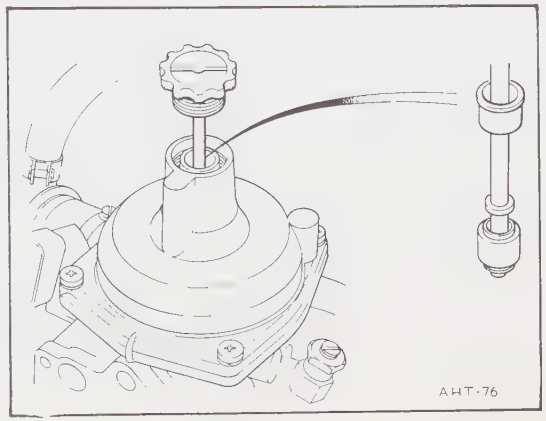

Fig. 13

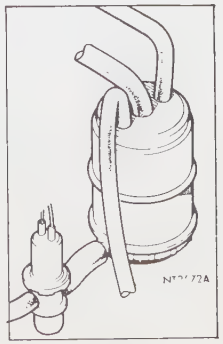

Fig 14

Oil Filter (Fig. 15)

Unscrew the filter from the cylinder block and fit a new filter and "O" ring. Ensure an oil-tight seal by cleaning and smearing the joint faces with oil before screwing the new filter unit tightly home.

Fuel Line Filter (Fig. 16)

The fuel line filter is a sealed unit and cannot be dismantled for cleaning. Detach the filter from the fuel line and fit a new unit. The filter is located behind the boot trim.

Exhaust System

To prevent injury to health, check the exhaust system for leaks and deterioration and rectify as necessary.

Universal Coupling Bolts

Check for tightness the universal coupling bolts at both ends of the propellor shaft linking the gearbox and final drive and coupling bolts on the left and right hand drive shafts.

Rear Hubs

Remove the plug (1) (Fig. 17) and fit a grease nipple. Using a grease gun, pump until grease exudes from the bearing. Remove the nipple, replace the plug and wipe away surplus grease.

Cylinder Head Nuts (Fig. 22)

Tighten the cylinder head nuts in the order shown. When required slacken them by reversing the sequence.

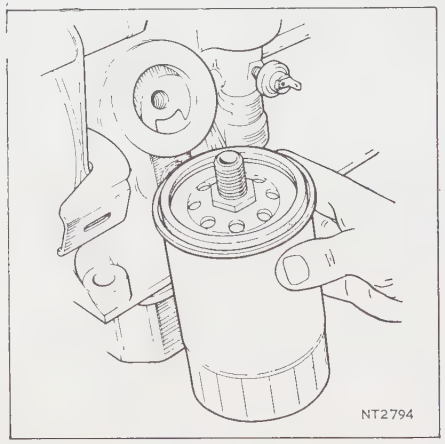

Fig. 15

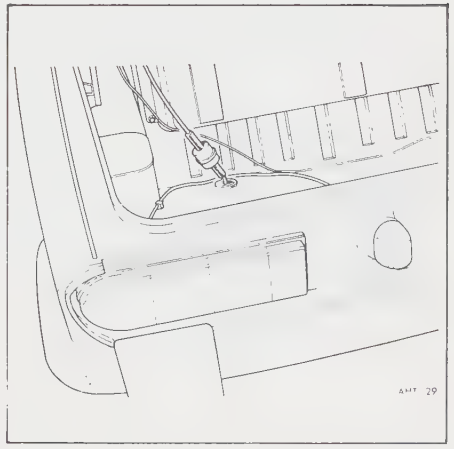

Fig. 16

Front Hubs (Fig. 19)

Jack up each front wheel in turn, remove the road wheel and check the hub bearings for end float. If excessive, adjust as follows:

1. Prise off the grease cap (11) and withdraw the split pin (12).
2. Whilst spinning the hub tighten the slotted nut (10) to 5 lb.ft. and unscrew the nut one flat to give 0·002 in. to 0·008 in. (0·05 mm. to 0·2 mm) hub end float.
3. Fit a new split pin, replace the grease cap and road wheel. Repeat operation on opposite hub.

At major overhaul period or every 12,500 miles if the car is being used for competition work, re-pack the front hubs with grease as follows:

1. Jack up the front of the car and remove road wheel.
2. Without disturbing the hydraulic pipe unions, unscrew the caliper securing bolts A and B (Fig. 18) and lift the caliper from the disc, tying it to a convenient point to prevent it hanging by the attached hydraulic pipe. Note the number of shims fitted between the caliper and the vertical link.
3. Prise off grease cap (11), withdraw the split pin (12) and unscrew the slotted nut (10). Remove the "D" washer and pull the hub assembly from the stub axle.
4. Wash all grease from the hub and bearings. Pack the hub and bearings with grease, working it well into the rollers and re-assemble.
5. Adjust the end float as described above.
6. Re-assemble the brake caliper unit, refitting any shims removed during dismantling.
7. Refit the road wheel, lower the jack, and repeat the above operations with the opposite wheel hub.

Lower Steering Swivel (Fig. 18)

Remove the plug (C) and fit a grease nipple. Using a grease gun charged with a recommended E.P. oil (see page 40), pump the gun until oil exudes from the bearing. Remove the nipple and refit the plug. Wipe away surplus oil.

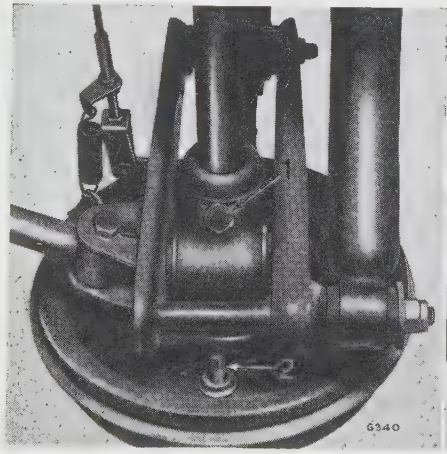

Fig. 17

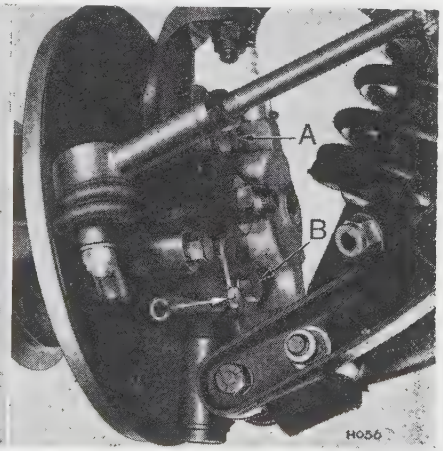

Fig. 18

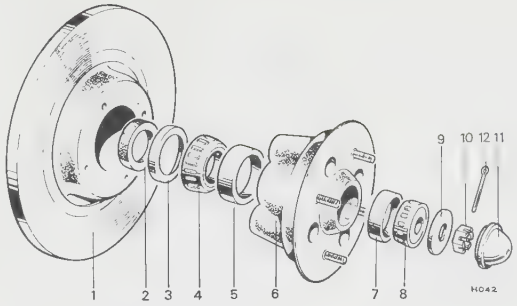

1. Brake disc
2. Oil seal
3. Oil seal cage
4. Taper bearing (inner)
5. Bearing track (inner)
6. Hub casting
7. Bearing track (outer)
8. Taper bearing (outer)
9. "D" washer
10. Slotted nut
11. Grease cap
12. Split pin

Fig. 19

Steering Unit and Suspension (Fig. 20)

Remove the plug from the top of the unit (shown arrowed) and fit a grease nipple. Apply the grease gun and give five strokes only with steering on full right lock. Remove the nipple and refit the plug. Over greasing can cause damage to the rubber bellows.

Have your British Leyland Dealer check the steering unit for excessive backlash and check the steering unit attachment bolts for tightness. Check also tie rods and levers and suspension nuts and bolts.

Handbrake Cable Guides (Fig. 21)

Smear grease around the handbrake cable guides (shown arrowed) and clevis pins.

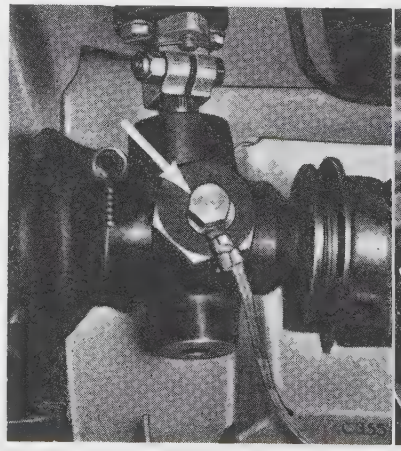

Fig. 20

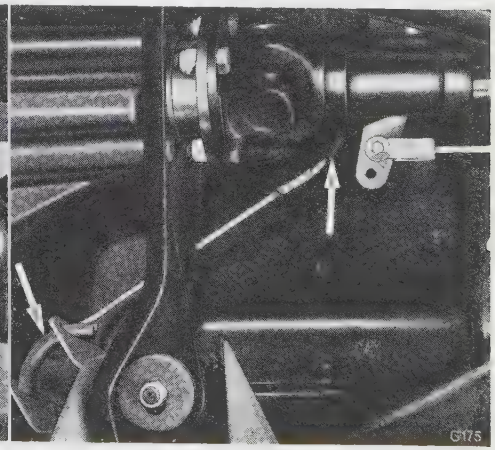

Fig. 21

Electrical Equipment

Check, and if necessary rectify, any defects that may exist with the lights, heater, and warning equipment. Check headlamp beam alignment (see page 19).

Body

Lubricate and check the operation of all hinges, door strikers and locks. Make sure surplus oil is removed to prevent damage to clothing.

Check safety harness bolts for tightness and examine the harness for wear and damage. Examine and if necessary replace worn pedal rubbers.

General

Check all nut and bolt torques and road test the car.

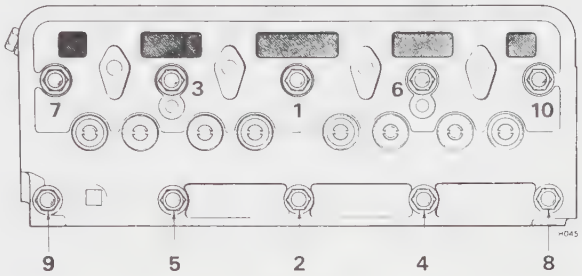

Fig. 22

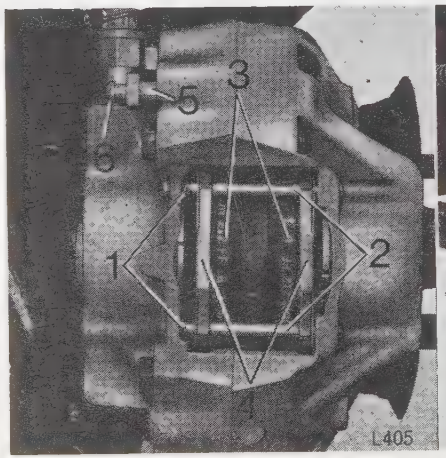

Fig. 23

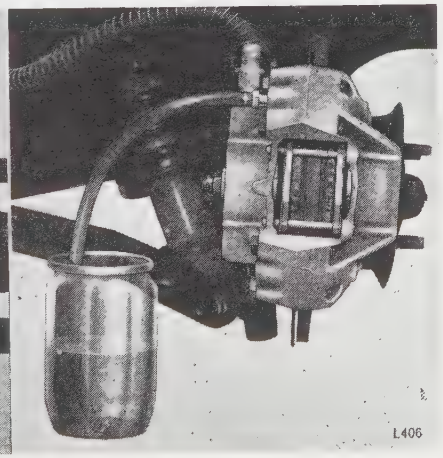

Fig. 24

BRAKE AND HYDRAULIC SYSTEM

BRAKES

The mechanical design of the braking system employs self adjusting disc brakes for the front and leading and trailing manually adjusted drum brakes for the rear wheels. Handbrake operation is by cables on the rear brakes only.

Front Brake Pads (Fig. 23)

Inspect the friction linings of the front disc brake pads for wear as specified in "Maintenance Summary" and when they are reduced to a thickness of $\frac{1}{8}$ in. (3 mm.) renew them as follows:

1. Apply the handbrake, jack up the front of the car and remove the front road wheels.
2. Release the retaining clips (1) and remove the pad retaining pins (2).
3. Lift the friction pads (3) and the anti-squeal plates (4) from the caliper.

   IMPORTANT: Do not depress the brake pedal while the pads are removed.
4. Clean the exposed faces of the pistons and the recesses into which the pads fit. Open the bleed screw (5) one turn and carefully push the pistons back into the calipers. A small amount of brake fluid will be discharged from the bleed screw nipple.
5. Tighten the bleed screw and fit the new brake pads. Replace the anti-squeal plates, ensuring that the arrows on the plates are pointing in the direction of the wheel rotation.
6. Insert the pad retaining pins and secure them with the spring clips.
7. Pump the brake pedal several times to re-position the pads against the disc.
8. Top-up the master cylinder if necessary.
9. Replace the front wheels and remove the jack.

Rear Brakes—Adjustment (Fig. 17, page 26)

Excessive foot pedal and handbrake travel indicates the need for rear brake adjustment.

Each rear brake is provided with an adjuster on the rear of the backing plate. To adjust the shoes, jack up the rear wheels and turn the adjuster (2) clockwise until the shoes are hard against the drum; then slacken the adjuster by one notch increments until the drum is free to rotate.

NOTE: There is a constant drag on the rear wheels caused by the friction of the differential and axle oil. Do not confuse this with brake drag.

Handbrake Adjustment

Handbrake "free-travel" is reduced to normal when the rear brake shoes are correctly adjusted.

A split hydraulic system employs a tandem master cylinder to pressurise independent front and rear brake lines.

A brake line failure in either line will be indicated to the driver by illumination of the brake line failure warning light mounted on the fascia panel (18, Fig. 1, page 3). The dangerous possibility of continual driving with a brake line failure is therefore prevented. The brake-line warning system is actuated by a pressure differential warning actuator (P.D.W.A.).

Bleeding the Hydraulic Braking System

General

If air has entered one of the hydraulic braking systems then only the system affected need be bled. During bleeding, exercise care, as described in the following procedure, to avoid moving the shuttle from its mid-position. However, if the shuttle has moved during bleeding or subsequent to a fault condition, centralise the shuttle by performing operations 1 to 5 under "Procedure for Re-Centralising the P.D.W.A. Shuttle" on this page.

Preparation for Bleeding

Before commencing to bleed the brakes ensure that all bleed nipples (6, Fig. 23, page 27) are clean and, taking care to avoid dirt entering the fluid reservoir, remove its filler cap and top-up with new hydraulic fluid. During the bleeding operation keep the fluid level above the dividing partition in the reservoir.

NOTE: Hydraulic fluid that has been exposed to the atmosphere or expelled from the system during bleeding must never be used for topping-up and should be discarded. Use new fluid from a sealed container, resealing the container after use.

Procedure

Commence with the brake, of the pair being bled, furthest from the master cylinder. If both systems are to be bled, bleed the rear brakes first. When bleeding the rear brakes, release the handbrake and turn the brake adjusters to lock the shoes against the drums. When the bleeding is completed adjust the brakes as detailed on page 27.

1. Attach a rubber tube of approx. $\frac{1}{4}$ in. (6 mm.) bore to the brake bleed nipple allowing the other end of the tube to hang submerged in a jar containing a quantity of clean brake fluid.
2. Unscrew the bleed-screw enough to allow the fluid to be pumped out (half a turn is normally sufficient).
3. Depress the brake pedal and allow it to return slowly noting that only a LIGHT pedal effort is required and the pedal must NOT be pushed through at the end of the stroke. (In addition, never "try" the pedal until all air has been dispelled and the system fully bled, as either action will cause the shuttle to move and actuate the switch). Pausing between each depression of the pedal, continue pumping until all air has been dispelled from the bleed-screw nipple (denoted by the absence of bubbles in the fluid being pumped into the jar).
4. With the pedal depressed, close the bleed-screw nipple and repeat the operation on the other brake.

Procedure for Re-Centralising the P.D.W.A. Shuttle

If, for reasons previously described, the P.D.W.A. shuttle requires to be re-centralised, adopt the following procedure.

1. Ensure that the car wheels are securely chocked and release the handbrake.
2. Fit a rubber tube, as described above, to a brake bleed-screw nipple at the opposite end of the car to that which has just been bled. Open the bleed-screw.
3. Switch the ignition on but DO NOT START THE ENGINE.
4. Exert a steady pressure on the brake pedal until the brake light dims and the oil light glows. (A click should be felt on the pedal as the shuttle returns to its mid-position.)
5. Tighten the bleed-screw.

NOTE: If the pedal has been pushed too hard the shuttle will move to the other side of the valve, thus requiring the procedure to be repeated on a brake at the opposite end of the car.

Preventive Maintenance

In addition to the recommended periodical inspection of brake components it is advisable as the car ages, and as a precaution against the effects of wear and deterioration, to make a more searching inspection and renew parts as necessary.

It is recommended that:

(1) Disc brake pads, drum brake linings, hoses and pipes should be examined at intervals no greater than those laid down in the Maintenance Summary of the Handbook.

(2) Brake fluid should be changed completely every 18 months or 19,000 miles whichever occurs sooner.

(3) All fluid seals in the hydraulic system should be renewed, and all flexible hoses should be examined and renewed if necessary every 3 years or 37,500 miles, whichever is the sooner. At the same time the working surface of the piston and of the bores of the master cylinder, wheel cylinders, and other slave cylinders should be examined and new parts fitted where necessary.

Care must be taken always to observe the following points:

(a) At all times use the recommended brake fluid.
(b) Never leave fluid in unsealed containers. It absorbs moisture quickly and can be dangerous if used in your braking system in this condition.
(c) Fluid drained from the system or used for bleeding is best discarded.
(d) The necessity for absolute cleanliness throughout cannot be over-emphasized.

Replacing Brake-shoes

When it becomes necessary to renew the brake-shoes, it is essential that only genuine shoes, with the correct grade of lining, are used. Always fit new shoes as complete axle sets, never individually or as a single wheel set. Serious consequences could result from out-of-balance braking due to mixing of linings.

Replacement brake-shoes are obtainable from your Dealer.

1975 EMISSION AND EVAPORATIVE CONTROL SYSTEMS CATALYTIC CONVERTER SPECIFICATION ONLY

All Triumph models entering the North American markets incorporate efficient emission control systems. These systems enable the vehicles to conform with all current State and Federal Regulations governing the emission of hydrocarbons, carbon monoxide, nitric oxide and the emission of fuel, by evaporation, from the fuel delivery system.

Fuel

THE SPITFIRE 1500 (U.S.A.) PERFORMS EFFICIENTLY ON UNLEADED FUELS OF 91 OCTANE.

NOTE: IT IS ESSENTIAL THAT UNLEADED FUELS ARE USED IN THIS VEHICLE OTHERWISE SERIOUS DAMAGE CAN BE CAUSED TO THE CATALYTIC CONVERTER.

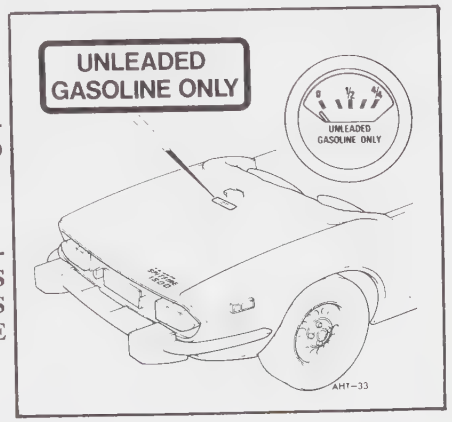

EMISSION CONTROL SYSTEMS—SERVICING

The importance of servicing at the correct intervals cannot be over-stressed as improvements in design and manufacturing techniques count for nothing if the servicing standards are not upheld.

Routine servicing, carried out at the mileage intervals quoted in the 'Maintenance Summary' helps to prevent deterioration of the systems.

CARBURETTER

The Stromberg CD4T150 emission carburetter is the prime component of the emission system and great care is exercised during the manufacture and initial adjustment of this instrument. Adjustment of the carburetter necessitates the use of specialised equipment and it is recommended that this is carried out by British Leyland Dealers.

EMISSION AND EVAPORATIVE CONTROL SYSTEMS

Carburetter Controls

The throttle rod linkage will not require adjustments during normal operation. To ensure complete throttle closure a degree of 'lost motion' or slackness is incorporated into the linkage; no attempt must be made to adjust this out.

Carburetter Servicing Schedules

To maintain the carburetter at peak efficiency, regular servicing as detailed in the "Maintenance Summary" is essential. The appropriate servicing operations should be performed by authorized dealers, who are trained in the use of the special equipment needed.

Crankcase Breathing (Fig. 1)

Crankcase breathing and evacuation of 'blow by' gases is achieved by utilizing the characteristic partial vacuum in the constant depression carburetter. By this method crankcase emissions are burned in the engine combustion process (Fig. 1). A wire gauze strainer in the engine top cover acts as an oil separator/flame trap.

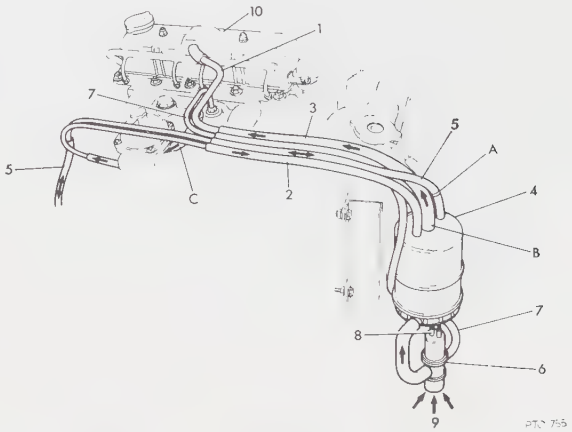

Fig. 1

1 Crankcase purge line
2 Carb float chamber vent pipe
3 Canister purge line
4 Charcoal canister
5 Fuel tank vent pipe
6 Anti run on valve
7 Manifold vacuum line
8 Electrical connections for anti run on valve
9 Purge air to canister
10 Flame arrestor
A 1/32″ restrictor
B 3/32″ restrictor
C 3/16″ restrictor

Running-on Control Valve (Fig. 1)

This valve prevents the "running-on" of the engine after the ignition is switched off when, due to the heat of the engine, a condition of compression ignition is set up.

The method of achieving a cut off is by applying a slight 'vacuum' to the float chamber of the carburetter when the ignition is switched off.

System Description

When the ignition is switched off a solenoid is activated which operates a valve that seals off the inlet to the bottom of the adsorption canister. With the inlet sealed a connection to the intake manifold applies a partial vacuum to the canister and consequently to the float chamber via an interconnecting pipe. The vacuum thus applied is sufficient to prevent fuel being drawn into the engine. When the engine has stopped and the oil pressure drops to zero the solenoid is deactivated and the engine is thus ready again for operation.

Servicing

The system requires no servicing other than checking for deterioration and leak free connection of the system piping.

Function Checks

If the system is not working then it will be apparent by engine running-on. A system check can be made by applying current to the solenoid which, if working correctly, will stop the engine.

Evaporative Control System

The evaporative control system uses an activated adsorption canister through which the fuel tank is vented. The following are features of the evaporative control system (see Fig. 2):

(1) The carburetter float chamber is vented to the charcoal canister.

(2) The constant depression of the carburetter is used to induce a purge condition through the adsorption canister via the running-on control valve. The crankcase breathing is also linked into the system.

(3) A separator tank prevents fuel surges from reaching the canister and thus saturating the system.

(4) The fuel filler cap is sealed to prevent evaporative losses.

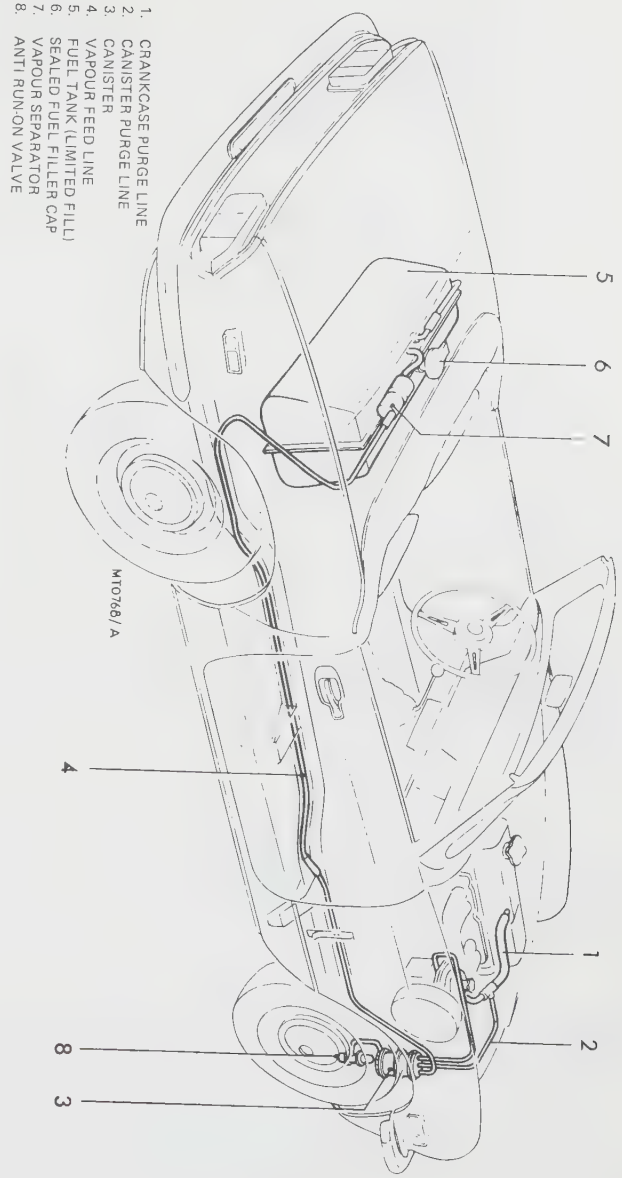

1975 SPITFIRE EVAPORATIVE EMISSION CONTROL SYSTEM

Fig. 2

(5) The fuel tank filler tube extends into the tank to prevent complete filling and so allow for expansion of fuel in hot weather.

(6) The piping from the separator tank to canister contains a restrictor valve which will prevent the fuel tank being overfilled.

Warning:

The use of compressed air to clean an adsorption canister or clear a blockage in the evaporative system is very dangerous. An explosive gas present in a partly saturated canister may be ignited by the heat generated when compressed air passes through the charcoal.

Servicing

Minimal servicing is required on the evaporation control system apart from renewing the adsorption canister at the specified interval and checking visually the security of piping on the system.

Exhaust Gas Recirculation (E.G.R.) System

System description

To reduce the NOx content in the exhaust, the peak combustion temperatures are lowered by recirculating a controlled quantity of the exhaust gases through the combustion process.

The E.G.R. valve is mounted on the exhaust manifold. A control signal, taken from a throttle edge tapping in the carburetter, gives no recirculation at idle or full load, but does allow an amount of recirculation, dependent on the vacuum signal and a metering profile on the valve, Fig. 3 under part load conditions.

Servicing

After the completion of the initial 1000 miles check the security of the E.G.R. valve operating lines. On the completion of subsequent 12,500 miles periods, a service indicator light, located on the facia will indicate that the following checks are necessary:

(1) Security of the E.G.R. valve operating lines

(2) Operation of the E.G.R. valve

(3) Clean the valve and pipework

(4) Reset the service indicator.
Reset key can be purchased from a British Leyland Dealer.

NOTE: It is recommended that this work is carried out by a British Leyland Dealer. An E.G.R. Emission Service Repair Kit together with a Service Indicator Reset key can be purchased from a British Leyland Dealer. Complete details on the servicing of the E.G.R. system are given in Workshop Manuals Pt. No. 545254, obtainable from British Leyland Dealers.

EMISSION AND EVAPORATIVE CONTROL SYSTEMS

Function checks

Warm the engine to normal running temperature. Ensure that the idle speed returns to normal i.e. choke in normal running position. Blip the throttle and observe the valve, which should open and close as the engine speed changes.

If the valve is not operating, remove E.G.R. valve and check the valve operation using a vacuum test gauge. Fit new E.G.R. valve if it is found to be defective.

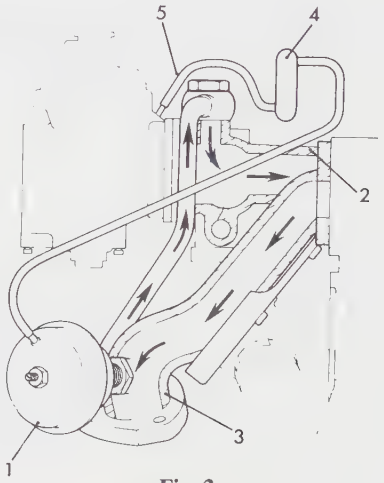

Fig. 3

1 E.G.R. valve
2 Inlet manifold
3 Exhaust manifold
4 Petrol trap
5 Vacuum source—throttle edge tapping

Catalytic Converters

A catalytic converter is fitted into the exhaust system in order to reduce carbon monoxide and hydrocarbon emissions. On completion of each 25,000 miles the necessity for renewal of the catalytic converter will be indicated by the catalytic converter warning light. It is recommended that this work be carried out by a British Leyland Dealer (A Catalytic Converter Service Repair Kit together with a Service Indicator Reset Key can be purchased from a British Leyland Dealer).

NOTE: Complete details on servicing the exhaust system and catalytic converter renewal are given in Repair Operations Manual Pt. No. 545254, obtainable from British Leyland Dealers.

THE FOLLOWING PRECAUTIONS APPLY TO CATALYTIC DEVICES:—

i) The catalytic converter contains ceramic material. Avoid heavy impacts on the converter casing.

ii) Use unleaded gasoline only. The use of leaded gasoline will seriously impair the efficiency of the emission control system.

iii) The reaction in the catalyic converter increases exhaust system temperatures. Care must be taken to avoid exhaust system contact with easily combustible materials such as dry grass.

Misfiring

If the engine misfires, the cause must be immediately rectified to prevent catalytic converter damage.

The use of any device that requires an insert into a spark plug hole in order to generate an air pressure, i.e. tyre pump or paint spray attachments could also result in catalytic converter damage.

EMISSION AND EVAPORATIVE CONTROL SYSTEMS

1976-1977 EMISSION AND EVAPORATIVE CONTROL SYSTEMS

All Triumph models entering the North American markets incorporate efficient emission control systems. These systems enable the vehicles to conform with all current Regulations governing the emission of hydrocarbons, carbon monoxide, nitric oxide and the emission of fuel, by evaporation, from the fuel delivery system.

Fuel:
NOTE: IT IS ESSENTIAL THAT UNLEADED FUELS ARE USED IN THIS VEHICLE OTHERWISE SERIOUS DAMAGE CAN BE CAUSED TO THE CATALYTIC CONVERTER.

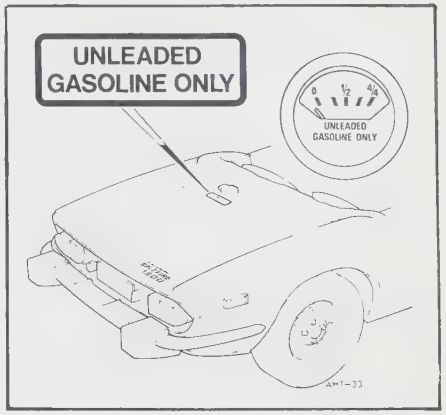

EMISSION CONTROL SYSTEMS—SERVICING

The importance of servicing at the correct intervals cannot be over-stressed as improvements in design and maufacturing techniques count for nothing if the servicing standards are not upheld.

Routine servicing, carried out at the mileage intervals quoted in the "Maintenance Summary", helps to prevent deterioration of the systems.

CARBURETTER

The emission carburetter is the prime component of the emission system and great care is exercised during the manufacture and initial adjustment of this instrument. Adjustment of the carburetter necessitates the use of specialised equipment and it is recommended that this is carried out by a British Leyland Dealer or other established and qualified service facility.

Carburetter Controls

The throttle rod linkage will not require adjustments during normal operation. To ensure complete throttle closure a degree of 'lost motion' or slackness is incorporated into the linkage and no attempt must be made to eliminate this.

Adjustments for Altitude

To ensure that the vehicle meets stringent exhaust emission standards at different altitudes, the carburetter settings must be adjusted at the altitude which principle use intended. (Areas above 4000 ft. are considered 'high' altitude and below 4000 ft. 'low' altitude).

If a vehicle is purchased in an area of high altitude, it will be adjusted prior to delivery.

If the area of principle use is charged, then the vehicle should be taken to an authorised dealer and the necessary carburetter adjustments made; they will take only a few minutes.

CALIFORNIA AND CANADA

Vehicles sold in California and Canada have not been designed or tested at high altitude, no adjustments should, therefore, be made for these specifications.

Carburetter Servicing Schedules

To maintain the carburetter at peak efficiency, regular servicing as detailed in the "Maintenance Summary" is essential. The appropriate servicing operations, checking and adjusting the idle speed, CO at idle, topping-up the carburetter piston dampers and checking and adjusting the deceleration by-pass valve, should be performed by authorized dealers, who are trained in the use of the special equipment needed.

CRANKCASE BREATHING (Fig. 1)

Crankcase breathing and evacuation of 'blow by' gases is achieved by utilizing the characteristic partial vacuum in the constant depression carburetter. By this method crankcase emissions are burned in the engine combustion process (Fig. 1). A wire gauze strainer in the engine top cover acts as an oil separator/flame trap.

1 Crankcase purge line
2 Carb. float chamber vent pipe
3 Canister purge line
4 Charcoal canister
5 Fuel tank vent pipe
6 Anti run-on valve (California only)
7 Manifold vacuum line (California only)
8 Electrical connections for anti run-on valve (California only)
9 Purge air to canister

10 Flame arrestor
A 1/32" restrictor
B 3/32" restrictor
C 3/16" restrictor

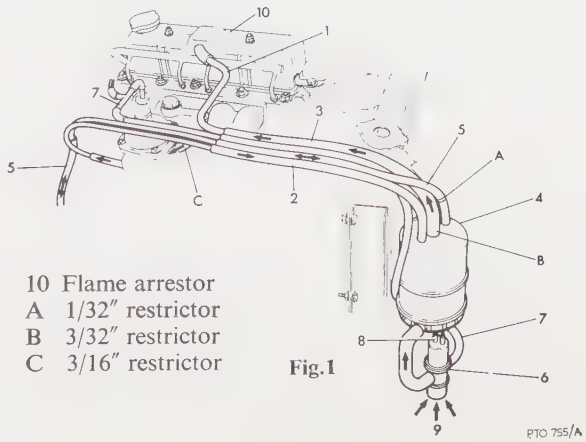

Fig.1

EMISSION AND EVAPORATIVE CONTROL SYSTEMS

Running-on Control—(Anti Run-on Valve) (Fig. 1)

NOTE: The running-on control valve is fitted to California specification vehicles only.

This valve prevents the "running-on" of the engine after the ignition is switched off when, due to the heat of the engine, a condition of compression ignition is set up.

The method of achieving a cut off is by applying a slight .vacuum' to the float chamber of the carburetter when the ignition is switched off.

When the ignition is switched off a solenoid is activated which operates a valve to seal off the inlet to the bottom of the adsorption canister. With the inlet sealed a connection to the intake manifold applies a partial vacuum to the canister and consequently to the float chamber via an interconnecting pipe. The vacuum thus applied is sufficient to prevent fuel being drawn into the engine. When the engine has stopped and the oil pressure drops to zero the solenoid is deactivated and the engine is thus ready again for operation.

If the valve is not working then it will be apparent by engine running-on. A system check can be made by applying current to the solenoid which, if working correctly, will stop the engine.

EVAPORATIVE CONTROL SYSTEM (Fig. 2)

The evaporative control system uses an activated adsorption canister through which the fuel tank is vented. The following are features of the evaporative control system:

(1) The carburetter float chamber is vented to the charcoal canister.

(2) The constant depression of the carburetter is used to induce a purge condition through the adsorption canister (California only), via the running-on control valve. The crankcase breathing is also linked into the system.

(3) A separator tank prevents fuel surges from reaching the canister and thus saturating the system.

(4) The fuel filler cap is sealed to prevent evaporative losses.

(5) The fuel tank filler tube extends into the tank to prevent complete filling and so allow for expansion of fuel in hot water.

(6) The piping from the separator tank to canister contains a restrictor valve which will prevent the fuel tank being overfilled.

Warning: The use of compressed air to clean an adsorption canister or clear a blockage in the evaporative system is very dangerous. An explosive gas present in a partly saturated canister may be ignited by the heat generated when compressed air passes through the charcoal.

Servicing

Minimal servicing is required on the evaporation control system apart from renewing the adsorption canister at the specified interval and checking visually the security of piping on the system.

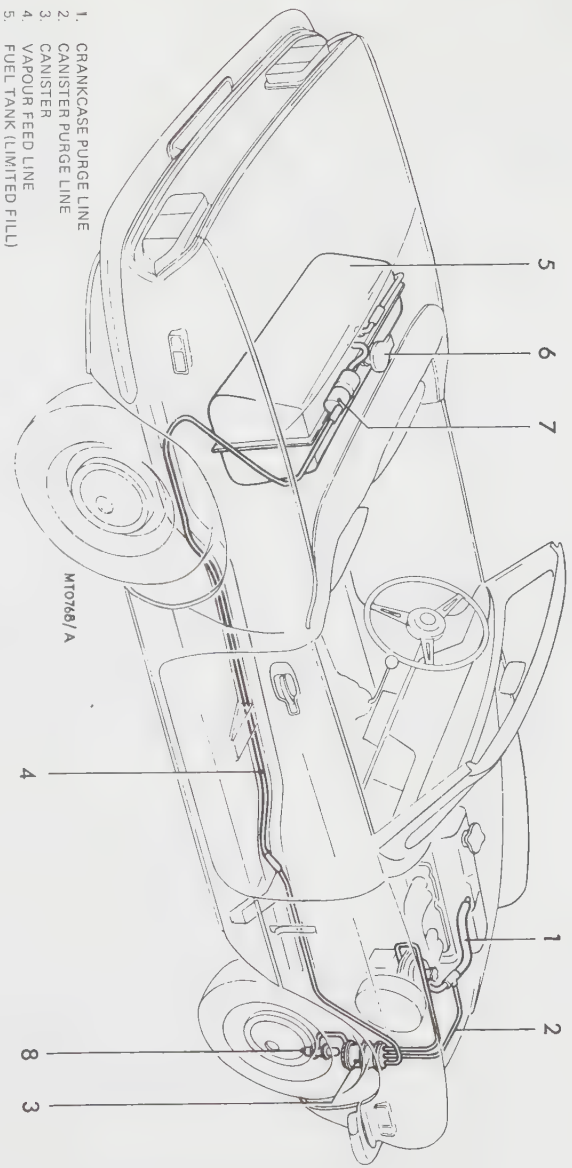

1976-1977 SPITFIRE EVAPORATIVE EMISSION CONTROL SYSTEM

Fig. 2

EXHAUST GAS RECIRCULATION (E.G.R.) SYSTEM (Fig. 3)

System description

To reduce the NOx content in the exhaust, the peak combustion temperatures are lowered by recirculating a controlled quantity of the exhaust gases through the combustion process.

The E.G.R. valve is mounted on the exhaust manifold. A control signal, taken from a throttle edge tapping in the carburetter, gives no recirculation at idle or full load, but does allow an amount of recirculation, dependent on the vacuum signal and a metering profile on the valve, Fig. 3, under part load conditions.

Servicing

After the completion of the initial 1000 miles, check the security of the E.G.R. valve operating lines. On the completion of 50,000 miles, the following checks are necessary:—

(1) Security of E.G.R. valve operating lines
(2) Operation of the E.G.R. valve
(3) Clean the valve and pipework

NOTE: It is recommended that this work be carried out by a British Leyland Dealer. Complete details on the servicing of the E.G.R. System are detailed in Repair Operations Manual Pt. No. RTC9230/77A obtainable from a British Leyland Dealer.

Function checks

Warm the engine to normal running temperature. Ensure that the idle speed returns to normal i.e. choke in normal running position. Blip the throttle and observe the valve, which should open and close as the engine speed changes.

If the valve is not operating, remove the E.G.R. valve and check the valve operation using a vacuum test gauge. Fit a new E.G.R. valve if it is found to be defective.

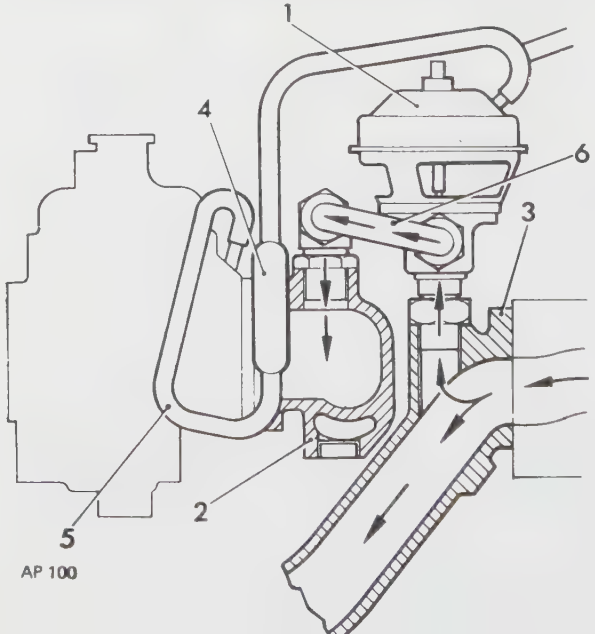

1 E.G.R. valve
2 Inlet manifold
3 Exhaust manifold
4 Petrol trap
5 Vacuum source—throttle edge tapping
6 E.G.R. pipe (asbestos lagged)

Fig. 3

AIR INJECTION SYSTEM

The air pump driven by the engine, delivers air into a single entry point on the exhaust manifold. A one-way valve prevents damage to the pump should back-fire or belt breakage occur. A relief valve, located in the air pump is required to dump part of the air at high speeds, to prevent pump damage.

Servicing

Minimal servicing is required on the system apart from inspecting the hoses and pipes at specified intervals.

CATALYTIC CONVERTERS—U.S.A.

A catlytic converter is fitted into the exhaust system in order to reduce carbon monoxide and hydrocarbon emissions.

California only.

The catalyst warning light will illuminate when the starter motor is operated to indicate no bulb filament failure. On the completion of each 25,000 miles the necessity for renewal of the catalytic converter will be indicated by the catalytic converter service warning light. After the initial 25,000 miles only, the cost of the converter and fitting will be borne by the manufacturer.

Other than California

The catalytic converter should be renewed every 50,000 miles; refer to the "Maintenance Summary".

NOTE:

It is recommended that catalytic converter servicing is carried out by a British Leyland Dealer or other established and qualified service facility. A catalytic converter Service Repair Kit together with a Service Indicator Reset Key can be purchased from a British Leyland Dealer. Reset Keys are only necessary for California vehicles. Complete details on servicing the exhaust system and catalytic converter renewal are given in Repair Operations Manual Pt. No. RTC 9230/77A obtainable from British Leyland Dealers.

EMISSION AND EVAPORATIVE CONTROL SYSTEMS

THE FOLLOWING PRECAUTIONS APPLY TO CATALYTIC DEVICES.

(1) In order to maintain the efficiency of the emission control system it is essential to use UNLEADED gasoline only; this fuel minimises spark plug fouling thereby substaining engine performance.

(2) DO NOT tamper with the engine settings; they have been established to ensure that the vehicle will comply with stringent exhaust emission regulations. Incorrect engine settings could cause unusually high catalytic converter temperatures and thus result in damage to the converter and vehicle. If adjustment to the settings is considered necessary, this should be performed by a British Leyland Dealer or other qualified service facility.

(3) A correctly tuned engine optimises exhaust emissions performance and fuel economy and it is recommended that the vehicle is maintained as outlined under the MAINTENANCE SUMMARY of this handbook.

(4) DO NOT continue to operate the vehicle if any engine malfunction is evident; malfunctions should be rectified immediately. For instance, misfire, loss of engine performance or engine run-on may lead to unusually high catalytic converter temperature and may result in damage to the converter and car.

(5) NEVER leave the vehicle unattended with the engine running.

(6) The use of a catalytic converter increases exhaust system temperatures, (particularly under engine malfunction), therefore do not operate or park the vehicle in areas where combustible materials such as dry grass or leaves may come into contact with the exhaust system.

(7) The vehicle is designed for normal road use. Below are examples of abuse which could damage the catalytic converter and car and may lead to a dangerous condition due to excessively high catalytic converter temperatures:

(a) Competition use
(b) Off roadway use
(c) Excessive engine revolutions
(d) Overloading the vehicle
(e) Excessive towing loads
(f) Switching off the engine and coasting in gear.

(8) DO NOT run the engine with either a spark plug lead disconnected or a spark plug removed.

DO NOT use any device that requires an insert into a spark plug hole in order to generate air pressure, (e.g. tyre pump, paint spray attachment, etc.), as this could result in catalytic convertor damage.

(9) DO NOT push or tow the vehicle to start it, this could damage the catalytic convertor. It is recommended that jumper leads are used.

(10) Heavy impact on the convertor casing must be avoided as it contains ceramic material which is easily damaged.

MAINTENANCE SUMMARY

The following items should be checked weekly by the driver:
Engine oil level
Brake fluid level
Radiator coolant level
Battery electrolyte level
Windscreen washer reservoir level
All tyre pressures
Operation of all lights
Operation of horn
Operation of all washers and wipers

MAINTENANCE INTERVALS

Service	Mileage 1000	Monthly Interval
A	1	1
B	3, 8, 16, 22, 28, 34, 41, 47	3
C	6, 19, 31, 44	6
D	12, 5, 37, 5	12
E	25, 50	24

NOTE: The service schedules are based on an annual total of approximately 12,500 miles. Should the vehicle complete substantially less miles than this per annum, it is recommended that a 'C' service is completed at six month intervals and a 'D' service at twelve month intervals.

'A' SERVICE

Engine
Check for oil leaks.
Renew engine oil.
Top-up carburettor piston dampers(s).
Check/adjust carburetter idle settings.
Lubricate accelerator control linkage and pedal pivot, check operation.
Check crankcase breathing and evaporative loss system hoses for security.
Check/top-up cooling system.
Check/adjust torque of cylinder head nuts/bolts.
Check security of engine mountings.
Check driving belts, adjust or renew.
Check cooling/heater systems for leaks and hoses for security and condition.
Check security of E.G.R. valve operating lines.
Check/adjust operation of all washers and top-up reservoirs.
Check/adjust valve clearances.
Check/adjust deceleration by-pass valve.

'A' SERVICE (*continued*)

Ignition
Check/adjust ignition timing using electronic equipment.
Check security of distributor vacuum unit line and operation of vacuum unit (California only).
Check security of distributor vacuum unit line (excluding California).
Check ignition wiring for fraying, chafing and deterioration.

Fuel and Exhaust Pipes
Check fuel system for leaks, pipes and unions for chafing and corrosion.
Check exhaust system for leaks and security.

Transmission
Check for oil leaks.
Check/top-up gearbox oil.
Check/top-up rear axle/final drive oil.
Check clutch pipes for leaks and chafing.
Check/top-up clutch fluid reservoir.

Steering and Suspension
Check condition and security of steering unit, joints and gaiters.
Check security of suspension fixings.
Check/adjust front and rear wheel alignment.
Check steering rack/gear for oil/fluid leaks.
Lubricate steering swivels

Brakes
Check visually hydraulic pipes and unions for chafing, leaks and corrosion.
Check/top-up brake fluid reservoir(s).
Check footbrake operation; adjust to manufacturer's instructions (manual)
Check handbrake operation; adjust to manufacturers' instructions.

Wheels and Tyres
Check adjust tyre pressures including spare.
Check tyres for external cuts in tyre fabric, exposure of ply or cord structure, lumps or bulges.
Check tightness of road wheel fastenings.
Important—If the tyres do not conform with legal requirements, report to the owner.

Body
Lubricate all locks and hinges (not steering lock).
Check operation of window controls.
Check tightness of sub-frame/body mountings.
Check operation of all door, bonnet and boot locks.
Check condition and security of seats and seat belts.
Ensure cleaniliness of controls, door handles, steering wheel.
Check operation of seat belt inertia reel mechanism.

'A' SERVICE (*continued*)

Electrical
Check function of original equipment, i.e. interior and exterior lamps, horns, wipers and warnings indicators.
Check/top-up battery electrolyte.
Check/adjust headlamp alignment.
Check output of charging system.

General
Road/roller test and check function of all instrumentation.

'B' SERVICE

Engine
Check for oil leaks.
Check/top-up cooling system.
Check cooling/heater systems for leaks and hoses for security and condition.
Check/adjust operation of all washers and top-up reservoirs.
Check/top-up engine oil.

Fuel and Exhaust Pipes
Check fuel system for leaks, pipes and unions for chafing and corrosion.
Check exhaust system for leaks and security.

Transmission
Check for oil leaks.
Check clutch pipes for leaks and chafing.
Check/top-up clutch fluid reservoir.

Steering and Suspension
Check condition and security of steering unit, joints and gaiters.
Check steering rack/gear for oil/fluid leaks.
Check shock absorbers for fluid leaks.

Brakes
Check visually hydraulic pipes and unions for chafing, leaks and corrosion.
Check/top-up brake fluid reservoir(s).
Inspect brake pads for wear and disc for condition.

Wheels and Tyres
Check adjust typre pressures including spare.

'B' SERVICE (*continued*)

Check tightness of road wheel fastenings.
Check that tyres comply with manufacturers specification.
Check tyres for tread depth and visually for external cuts in fabric, exposure of ply or cord structure, lumps or bulges.
Important—If the tyres do not conform with legal requirements, report to the owner.

Body
Check condition and security of seats and seat belts.
Ensure cleanliness of controls, door handles and steering wheel.
Check operation of seat belt inertia reel mechanism.
Check rear view mirror for cracks and crazing.
Check operation of seat belt warning system.

Electrical
Check function of original equipment i.e. interior and exterior lamps, horns, wipers and warning indicators.
Check/top-up battery electrolyte.
Check/adjust headlamp alignment.
Check, if necessary, renew wiper blades.

General
Report additional work required.

'C' SERVICE

Engine
Check for oil leaks.
Renew engine oil.
Lubricate accelerator control linkage and pedal pivot, check operation.
Check/top-up cooling system.
Check driving belts, adjust or renew.
Check cooling/heater systems for leaks and hoses for security and condition.
Check/adjust operation of all washers and top-up reservoir(s).
Renew engine oil filter.

Fuel and Exhaust Pipes
Check fuel system for leaks, pipes and unions for chfing and corrosion.
Check exhaust system for leaks and security.

Transmission
Check for oil leaks.
Check top-up rear axle/final drive oil.
Check clutch pipes for leaks and chafing.
Check/top-up clutch fluid reservoir.

'C' SERVICE (*continued*·

Steering and Suspension
Check condition and security of steering unit, joints and gaiters.
Check/adjust front and rear wheel alignment.
Check steering rack/gear for oil/fluid leaks.
Check shock absorbers for fluid leaks.
Lubricate steering rack and pinion.
Lubricate steering swivels.

Brakes
Check visually hydraulic pipes and unions for chfing, leaks and corrosion.
Check/top-up brake fluid reservoir(s).
Check footbrake operation; adjust to manufacturer's instructions (manual).
Check handbrake operation; adjust to manufacturer's instructions.
Select brake linings/pads for wear, drum/discs for condition.
Lubricate handbrake mechanical linkage and cable guides (lever pivot).

Wheels and Tyres
Check adjust tyre pressure including spare.
Check tightness of road wheel fastenings.
Check that tyres comply with manufacturers specification.
Check tyres for tread depth and visually for external cuts in fabric, exposure of ply or cord structure, lumps or bulges.

Body
Lubricate all locks and hinges (not steering lock).
Check condition and security of seats and seat belts.
Ensure cleanliness of controls, door handles steering wheel.
Check operation of seat belt inertia real mechanism.
Check rear view mirror for cracks and crazing.
Check operation of seat belt warning system.

Electrical
Check function of original equipment i.e. interior and exterior lamps, horns, wipers and warning indicators.
Check/top-up battery electrolyte.
Check/adjust headlamp alignment.
Check, if necessary, renew wiper blades.
Clean and grease battery connections.
Check output of charging system.

General
Road/roller test and check function of all instrumentation.
Report additional work required.
Further brake maintenance is given on Page 27 of this handbook.

'D' SERVICE

Engine
Check for oil leaks.
Renew engine oil.
Top-up carburetter piston damper(s).
Check/adjust carburetter idle settings.
Lubricate accelerator control linkage and pedal pivot, check operation.
Check crankcase breathing and evaporative loss system. Check hoses/pipes, restrictors for blockage, security and condition.
Check/top-up cooling system.
Check driving belts, adjust or renew.
Check cooling/heater systems for leaks and hoses for security and condition.
Check/adjust operation of all washers and top-up reservoirs.
Renew engine oil filter.
Renew fuel filter.
Renew carburetter/air intake air cleaner elements.
Check/adjust valve clearance.
Check/adjust deceleration by-pass valve.
Check air injection system hoses/pipes for security and condition.
Check air intake temperature control system.

Ignition
Lubricate distributor.
Check ignition wiring for fraying, chafing and deterioration.
Check security of distributor vacuum unit line and operation of vacuum unit. (California only).
Check security of distributor vacuum unit line (excluding California).
Clean distributor cap, check for cracks and tracking.
Check coil performance on oscilloscope.
Renew spark plugs.
Check/adjust ignition timing using electronic equipment.

Fuel and Exhaust Pipes
Check fuel system for leaks, pipes and unions for chafing and corrosion.
Check exhaust system for leaks and security.
Check condition of fuel filler cap seal.

Transmission
Check for oil leaks.
Check/top-up gearbox oil.
Check/top-up rear/axle final/drive oil.
Check clutch pipes for leaks and chafing.
Check/top-up clutch fluid reservoir.
Lubricate clutch pedal pivots.
Check tightness of drive shaft coupling bolts.
Check tightness of propeller shaft coupling bolts.

'D' SERVICE (*continued*)

Steering and Suspension
Check condition and security of steering unit joints and gaiters.
Check security of suspension fixings.
Check/adjust front (and rear) wheel alignment.
Check steering rack/gear for oil/fluid leaks.
Check shock absorbers for fluid leaks.
Lubricate steering rack and pinion.
Adjust front hub bearing end-float.
Lubricate steering swivels.
Lubricate rear hubs.

Brakes
Check visually hydraulic pipes and unions for chfing, leaks and corrosion.
Check/top-up brake fluid reservoir(s).
Check footbrake operation; adjust to manufacturer's instructions (manual).
Check handbrake operation; adjust to manufacturer's instructions.
Inspect brake linings/pads for wear, drums/discs for condition.
Lubricate handbrake mechanical linkage and cable guides (lever pivot).
Lubricate brake pedal pivots.

Wheels and Tyres
Check adjust tyre pressures including spare.
Check tightness of road wheel fastenings.
Check that tyres comply with manufacturer's specification.
Check tyres for tread depth and visually for external cuts in fabric, exposure of ply or cord structure, lumps or bulges.

Body
Lubricate all locks and hinges (not steering lock).
Check operation of window controls.
Check operation of all door, bonnet and boot locks.
Check condition and security of seats and seat belts.
Ensure cleanliness of controls, door handles and steering wheel.
Check operation of seat belt inertia reel mechanism.
Check rear view mirror for cracks and crazing.
Check operation of seat belt warning system.

Electrical
Check function of original equipment, i.e. interior and exterior lamps, horns, wipers and warning indicators.
Check/top-up battery electrolyte.
Check/adjust headlamp alignment.
Check, if necessary, renew wiper blades.
Check and grease battery connections.
Check output of charging system.

'D' SERVICE (*continued*)

General

Road/roller test and check function of all instrumentation.
Report additional work required.
Further brake maintenance is given on Page 51 of this handbook.

'E' SERVICE

This service comprises of the 'D' Service Operations except that in addition the following operation should be performed:-

Renew adsorption canister. (50,000 miles only).

Check EGR system (50,000 miles only).

Renew catalytic coverter (California only) (25,000 miles).

CARE OF BODYWORK

To preserve the "new look" of the body, the following suggestions are offered.

Washing

Avoid using a dry cloth to wipe dust from the paintwork and chromium surfaces Dust is an abrasive and, if removed in this way, will scratch the polished surfaces. Wash the car frequently with plenty of running water and a clean, soft sponge. Soften and if possible remove the mud with water before using the sponge. When all dirt is removed, sponge off and dry with a clean, damp chamois leather. Never wash or polish the car under a hot sun.

Before using an automatic car wash ensure that the radio aerial is fully retracted.

Removing Grease and Tar

Remove grease or tar with methylated spirits (alcohol). White spirit is also effective, but this must not be applied to rubber, particularly the windscreen wiper blades.

Glass Surfaces

Glass is easily scratched. This can be avoided by always using a damp chamois leather which is especially reserved for use on glass only. If silicone polishes have been used on the body, take care that the polish does not come into contact with the glass It is extremely difficult to remove and causes the windscreen wipers to smear.

Chromium Plating and Stainless Steel

Frequent washing and thorough drying is recommended, especially during the winter months when there is likelihood of corrosion through contamination with road salt.

Polishing

After a period of use, the formation of traffic film will cause the paintwork to lose some of its lustre, even though the car has been carefully and regularly washed. The original brilliance may be restored after washing by using a reputable non-abrasive cleaner and polish.

Being the most durable, wax preparations are preferable, but where these are used regularly the old wax must first be removed with a cleaner before further application of new wax. The frequency at which polishing is necessary will depend upon local conditions of air pollution.

Interior of Car and Soft Top

Brush and clean the inside of your car each time you wash and polish the outside. Use a vacuum cleaner where possible and ensure complete removal of all dust from the interior and trim.

Wash the upholstery and soft top with luke-warm, non-caustic, soapy water. Do not use detergents or household cleaners as these may cause damage.

Remove all traces of suds with a clean, damp cloth and thoroughly dry the upholstery with a dry duster or towel.

Wipe the facia and instrument panel with a damp cloth only. Wax or other polishes should not be used inside the car.

Inflammability

The car interior conforms to Federal laws on flammability. To preserve this condition do not clean interior other than as described above.

COMPONENT	TEMPERATURE RANGE	SERVICE CLASSIFICATION	S.A.E. VISCOSITY SPECIFICATION
Engine and Carb Dashpots	Above 14°F (-10°C)	API S.E.	SAE 10W/50; SAE 20W/50; SAE 10W/40; SAE 20W/40
	-5°F to 50°F (-20°C to + 10°C)		SAE 10W/30; SAE 10W/40; SAE 10W/50
	Below 14°F (-10°C)		SAE 5W/20; SAE 5W/30
Gearbox/ Overdrive and Final Drive	Above 30°F (0°C)	API G.L.4	SAE 90 Hypoid
	Below 30°F (0°C)		SAE 80 Hypoid
Steering Rack Hubs & Chassis Grease Points	All	NLGI 2 Multipurpose Grease	
Brake and Clutch Fluid	All	DOT3 (FMVSS116) and SAE Specification J.1703d Minimum boiling point 500°F (260°C)	
Anti-freeze	Permanent type ethylene glycol base with suitable inhibitor for mixed metal systems		
Windscreen Washer	Windscreen Washer Antifreeze Fluid (Proprietary Brands)		

GENERAL SPECIFICATION

Engine

Number of cylinders	4.
Bore of cylinders	2·9 in. 73 7 mm.
Stroke of crankshaft	3·44 in. 87 5 mm.
Cubic capacity	91·0 in.³ 1493 c.c.
Piston area	26·5 in.² 171·0 cm.²
Compression ratio	7·5:1
Valve rocker clearances (cold)	0·010 in. 0·25 mm.
Valve timing	Inlet and exhaust valve equally open at T.D.C.

Lubrication (Engine)

Pump	High capacity eccentric lobe type.
Filter	Full flow type. Replaceable element.

Cooling System	"No loss" system incorporating plastic overflow reservoir.
Circulation	Pump, driven by "Vee" belt; thermostatically controlled flow.
Fan (1976-1977)	13 blade 12½ in. dia. (318 mm) incorporating a viscous coupling.
Fan (1975)	Seven blade 11½ in. dia. (292 mm) incorporating a viscous coupling
Fuel System	Tank above rear axle. No reserve tap.
Pump	A.C. mechanically operated diaphragm type.
Carburetter (1976-1977)	(1) Stromberg 150 CD4T incorporating Automatic Choke
Carburetter (1975)	(1) Stromberg 150 CD4 (North America excluding Catalytic converter specification). (1) Stromberg 150 CD4T incorporating Automatic Choke (Catalytic converter specification).
Manifolds	Cast iron exhaust manifold, cast aluminium inlet manifold water heated.
Air Cleaner	Replaceable paper element.
Crankcase breathing	Positive crankcase ventilation valveless closed circuit breathing from rocker cover using carburettor depression.
Filter	Replaceable fitted in tank/pipe-line.
Evaporative emission control	Sealed fuel filler cap. Emission vented via a separator into carbon canister located in the engine compartment. Canister purged by carburetter depression.

Ignition System (1976-1977)

Coil	Lucas 6 volt with ballast resistor coil 15C6.
Distributor—type	Lucas 45DE4 (Electronic pointless distributor)
Federal Specification	Centrifugal and vacuum advance.
California Specification	Centrifugal advance and vacuum retard.
rotation—viewed on rotor	Anti-clockwise.
Firing order	1-3-4-2.
Spark plugs—type	Champion N-12Y
—gap	0·025 in. 0·64 mm.
Ignition timing—	
Federal specification (static)	10°BTDC
(dynamic)	10°BTDC @ 800 ± 100 rpm.
California specification (static)	10°BTDC
(dynamic)	2°ATDC ± 800 @ 100 rpm.
Pick up air gap	0·015 in. 0·4 mm.

Ignition System (1975)

Coil	Lucas 6 volt with ballast resistor coil 15C6.
Distributor—type	Lucas 45D4 (Electronic pointless distributor)
rotation—viewed on rotor	Anti-clockwise.
Firing order	1-3-4-2.
Spark plugs—type	Champion N-12Y
—gap	0·025 in. 0·64 mm.
Ignition timing (static)	10° B.T.D.C.
Ignition timing (dynamic)	2° A.T.D.C. @ 700-900 r.p.m.
Pick up air gap	0·015 in. 0·4 mm.
Fast idle (hot)	1700-1900 r.p.m.

Electrical System

Voltage	12.
Polarity	Negative earth.
Fuses	35 amp.
Battery—type	12 volt 40 amp. hr. @ 20 hr. rate
Alternator—type	Lucas 16ACR.
—output	34 amps.
Oil pressure switch operating pressure	3/5 p.s.i. 0·2/0·35 kg./cm.²
Starter motor	Lucas M35J inertia type.

Transmission

Clutch	Diaphragm type. 7¼ in. dia. (184 mm.)
Gearbox	4 speed constant mesh. Synchromesh on all forward ratios.

	Top	3rd	2nd	1st	Rev.
Ratios	1	1·39	2·16	3·50	3·99
Overall ratios	3·89	5·42	8·40	13·62	15·51

Overdrive (optional)	Laycock de Normanville. Operates on 3rd and Top gears. Ratio 0·797:1.
Rear axle	Hypoid bevel drive. Ratio 3·89:1.
Wheels	Pressed steel disc type 4½J rim.
Tyres	155SR13 Radial ply.

Steering

Turning circle	24 ft.	7·3 m.
Steering unit	Rack and pinion 3¾ turns lock to lock. Impact absorbing steering column with anti-theft locking device.	

Suspension

Front	Independent double wishbone type, with rubber bushed wishbone pivots. Patented screwed bottom bush and top ball joint swivels. Coil springs controlled by telescopic type direct acting dampers and anti-roll bar. Taper roller bearings in hub.
Rear	Swing axle type independent suspension, pivoted transverse leaf spring and trailing radius rods direct acting telescopic dampers.

Brake System .. .. .. Girling hydraulic. Centrally mounted hand-brake coupled mechanically to rear wheels only.

Pedal operates on tandem master cylinder to front and rear brakes independently. Pressure differential valve and warning light fitted to indicate partial system failure.

Front	Caliper disc 9 in. dia. (229 mm.).	
Rear	Drum 7 in. dia. (178 mm.) × 1¼ in. (32 mm.). wide. Leading and trailing shoe.	
Front lining area	14·8 in.²	95 cm.²
Front swept area	150 in.²	967 cm.²
Rear lining area	34 in.²	220 cm.²
Rear swept area	55 in.²	355 cm.²
Total lining area	48·8 in.²	315 cm.²
Total swept area	205 in.²	1322 cm.²

Exterior Dimensions (1976-1977)

Overall length	156.3 ins.	3970 mm.
Width	58.5 ins.	1488 mm.
Height with hood erected (unladen)	45.6 ins.	1159 mm.
Height with hood folded (unladen) to top of screen	43.7 ins.	1110 mm.

Exterior Dimensions (1975)

Overall length	13 ft. 0¾ ins.	3970 mm.
Width	4 ft. 10½ ins.	1488 mm.
Height with hood erected (unladen)	3 ft. 11½ in.	1205 mm.
Height with hood folded (unladen) to top of screen	3 ft. 8¼ in.	1125 mm.

Weight (approx.)

Shipping—basic	1761 lbs.	799 kgs.
Shipping (includes options)	1847 lbs.	838 kgs.
Kerb basic	1814 lbs.	823 kgs.
Kerb (includes options)	1900 lbs.	862 kgs.
GVW (Gross vehicle weight)	2339 lbs.	1061 kgs.

Chassis Data

Frame	Double backbone of closed channel section with channel outriggers.		
Wheelbase	83 in.	2110 mm.	
Track—Disc wheels—Front	83 in.	1245 mm.	2 up.
—Rear	50 in.	1270 mm.	2 up.
Ground clearance (1976-1977)	4.4 in.	112 mm.	2 up.
Ground clearance (1975)	5.0 in.	127 mm.	

Capacities

	U.S.A.	Imperial	Metric
Fuel tank	8·7 galls.	7·25 galls.	33 litres
Engine sump and oil filter	9·6 pints	8 pints	4·5 litres
Engine sump drain and refill	8·4 pints	7 pints	4·0 litres
Gearbox	1·8 pints	1·5 pints	0·85 litres
Gearbox and overdrive	3·25 pints	2·7 pints	1·5 litres
Rear axle	1·2 pints	1 pint	0·57 litres
Cooling system (inc. water bottle)	8·4 pints	7 pints	4·0 litres
Cooling system (inc. water bottle) with heater	9·6 pints	8 pints	4·5 litres

Road Speed Data

	Engine Speed r.p.m.			
	Top	**3rd**	**2nd**	**1st**
At road speed of 10 m.p.h.	595	827	1282	2084
At road speed of 10 km.p.h.	369	513	796	1293
Road speed at 1,000 r.p.m. in top gear	= 16·8 m.p.h.		= 27 km.p.h.	
Road speed at 2,500 ft./min. in top gear	= 73·7 m.p.h.		= 118 km.p.h.	

Overdrive

Overall ratio	Top gear 3·10	3rd gear 4·32.
	Engine Speed r.p.m.	
At road speed of 10 m.p.h. ..	Top gear 474	3rd gear 660
At road speed of 10 k.p.h. ..	294	410
Road speed at 1,000 r.p.m. in top gear	21·1 m.p.h.	34·0 km.p.h.

TUNING DATA

	California Specification only	Federal Specification (Excluding California)
Idle Speed	800 ± 100 rpm	800 ± 100 rpm
Plug Gap	0.025 in 0.64 mm	0.025 in 0.64 mm
Rocker Clearance (Cold)	0.010 in 0.25 mm	0.010 in 0.25 mm
Dwell	Fixed (Electronic)	Fixed (Electronic)
Carburetter Type	150 CD4T	150 CD4T
Needle	45L■	BIDL■
CO Reading at Idle and Procedure for setting	3% Nominal Min. 0.5% Max. 6.5% Disconnect and plug the air injection system, (downstream of the diverter valve vent pump to atmosphere) and adjust the mixture strength with the external adjuster. To give larger adjustments move the metering needle using a special tool.	
Firing Order	1342	1342
Plug Type	N—12Y	N—12Y

TRIUMPH SPITFIRE 1500
WORKSHOP MANUAL

PART 2

British Leyland UK Limited is constantly seeking ways to improve the specification of its vehicles and alterations take place continually. While every effort is made to produce up-to-date literature this Manual should not be regarded as an infallible guide to current specification. Further the specification details set out in this Manual apply to a range of vehicles and not to any particular one.

Distributors and Dealers are not agents of British Leyland UK Limited and have absolutely no authority to bind British Leyland UK Limited by any express or implied undertaking or representation.

© British Leyland UK Limited 1975

All rights reserved. No part of this publication may be reproduced, stored in a retrieval system or transmitted in any form by electronic, mechanical, photocopying, recording or other means without prior written permission of British Leyland Cars, Service and Parts, Cowley, Oxford.

[NOTE: Any material added to this *Workshop Manual* by Robert Bentley, Inc., has been indicated by the use of brackets ([]). Material from other British Leyland publications, which has been added to include information pertaining to the 1976 and 1977 models, has been indicated by the addition of a source reference at the bottom of the appropriate page.]

CONTENTS

General Specification Data 51

Engine Tuning Data 57

Torque Wrench Settings 59

Recommended Lubricants, Fuel and Fluids Capacities 63

Maintenance 67

Engine 99

Anti-Pollution System 169

Fuel System 185

Cooling System 217

Manifold and Exhaust System 229

Clutch 237

Gearbox 245

Overdrive 'J' Type 269

Propeller and Drive Shafts 301

Rear Axle and Final Drive 309

Steering 323

Front Suspension 337

Rear Suspension 349

Brakes 357

Wheels and Tyres 377

Body 383

Heating and Ventilation 411

Windscreen Wipers and Washers 417

Electrical 429

Instruments 493

Service Tools 505

[NOTE: Each topic in this *Workshop Manual* is given a 6-digit number. These topic numbers are printed in the lower outside margin of the page on which the topic appears. (Topics are in numerical order throughout the *Workshop Manual*.) All references in the text are made using the 6-digit topic numbers.]

INTRODUCTION

The purpose of this manual is to assist skilled mechanics in the efficient repair and maintenance of British Leyland vehicles. Using the appropriate service tools and carrying out the procedures as detailed will enable the operations to be completed in the time stated in the 'Repair Operation Times'.

Indexing

For convenience, the manual is divided into a number of divisions. Page 01-3 list the titles and reference number of the various divisions.

A list of the operations within each division appears in alphabetical order on the page preceding each division.

Operation Numbering

A master index of numbered operations has been compiled for universal application to all vehicles manufactured by the British Leyland Motor Corporation and, therefore, because of the different specifications of various models, continuity of the numbering sequence cannot be maintained throughout this manual.

Each operation described in the manual is allocated a number from the master index and cross-refers with an identical number in the 'Repair Operation Times'. The number consists of six digits arranged in three pairs.

Each instruction within an operation has a sequence number and, to complete the operation in the minimum time, it is essential that the instructions are performed in numerical sequence commencing at 1 unless otherwise stated. Where applicable, the sequence numbers identify the relevant components in the appropriate illustration.

Emission Control

With the exception of Section 17, all remaining sections of this manual relate to basic vehicles not fitted with *anti-pollution* equipment. Where an operation is affected by the presence of this equipment, refer also to Anti-pollution (Section 17) as appropriate.

Service Tools

Where performance of an operation requires the use of a service tool, the tool number is quoted under the operation heading and is repeated in, or following, the instruction involving its use. An illustrated list of all necessary tools is included in Section 99.

References

References to the left- or right-hand side in the manual are made when viewing from the rear. With the engine and gearbox assembly removed, the 'timing cover' end of the engine is referred to as the front. A key to abbreviations and symbols is given on page 01-5.

Amendments

Revised and additional procedures resulting from changes in the vehicle specifications will be issued as revised or additional pages.

The circulation of amendments will be confined to Distributors and Dealers of British Leyland Motor Corporation Limited.

REPAIRS AND REPLACEMENTS

When service parts are required it is essential that only genuine British Leyland Stanpart or Unipart replacements are used.

Attention is particularly drawn to the following points concerning repairs and the fitting of replacement parts and accessories

Safety features embodied in the car may be impaired if other than genuine parts are fitted. In certain territories legislation prohibits the fitting of parts not to the vehicle manufacturer's specification. Torque wrench setting figures given in the Repair Operation Manual must be strictly adhered to. Locking devices, where specified, must be fitted. If the efficiency of a locking device is impaired during removal it must be renewed. Owners purchasing accessories while travelling abroad should ensure that the accessory and its fitted location on the car conform to mandatory requirements in their country of origin.

The car warranty may be invalidated by the fitting of other than genuine British Leyland parts. All British Leyland Stanpart or Unipart replacements have the full backing of the factory warranty.

British Leyland Distributors and Dealers are obliged to supply only genuine service parts.

ABBREVIATIONS AND SYMBOLS

Across flats (bolt size)	A.F.
After bottom dead centre	A.B.D.C.
After top dead centre	A.T.D.C.
Alternating current	a.c.
Amperes	amp
Ampere-hour	Ah
Atmospheres	Atm
Before bottom dead centre	B.B.D.C.
Before top dead centre	B.T.D.C.
Bottom dead centre	B.D.C.
Brake horse-power	b.h.p.
Brake mean effective pressure	b.m.e.p.
British Standards	B.S.
Carbon monoxide	CO
Centigrade (Celsius)	C
Centimetres	cm
Cubic centimetres	cm^3
Cubic inches	in^3
Cycles per minute	c/min
Degree (angle)	deg. or °
Degree (temperature)	deg. or °
Diameter	dia.
Direct current	d.c.
Fahrenheit	F
Feet	ft
Feet per minute	ft/min
Fifth	5th
Figure (illustration)	Fig.
First	1st
Fourth	4th
Gallons (Imperial)	gal
Gallons (U.S.)	U.S. gal
Grammes	g
Grammes (force)	gf
Grammes (mass)	g
High compression	h.c.
High tension (electrical)	h.t.
Horse-power	hp
Hundredweight	cwt
Inches	in
Inches of mercury	inHg
Independent front suspension	i.f.s.
Internal diameter	i.dia.
Kilogrammes (force)	kgf
Kilogrammes (mass)	kg
Kilogramme centimetre	kgf cm
Kilogramme metres	kgf m
Kilogrammes per square centimetre	kg/cm^2
Kilometres	km
Kilometres per hour	km/h
Kilovolts	kV
King pin inclination	k.p.i.
Left-hand	L.H.
Left-hand steering	L.H.Stg.
Left-hand thread	L.H.Thd.
Low compression	l.c.
Low tension	l.t.
Maximum	max.
Metres	m
Microfarad	mfd
Midget Edison Screw	MES
Miles per gallon	m.p.g.
Miles per hour	m.p.h.
Millimetres	mm
Millimetres of mercury	mmHg
Minimum	min.
Minus (of tolerance)	
Minute (of angle)	′
Negative (electrical)	
Newton metres	Nm
Number	No.
Ohms	ohm
Ounces (force)	ozf
Ounces (mass)	oz
Ounce inch (torque)	ozf in
Outside diameter	o.dia.
Overdrive	O/D
Paragraphs	para.
Part Number	Part No.
Percentage	%
Pints (Imperial)	pt
Pints (U.S.)	U.S. pt
Plus or minus	±
Plus (tolerance)	+
Positive (electrical)	+
Pounds (force)	lbf
Pounds (mass)	lb
Pounds feet (torque)	lbf ft
Pounds inches (torque)	lbf in
Pounds per square inch	lb/in^2
Radius	r
Ratio	:
Reference	ref.
Revolutions per minute	rev/min
Right-hand	R.H.
Right-hand steering	R.H.Stg.
Second (angle)	″
Second (numerical order)	2nd
Single carburetter	SC
Society of Automobile Engineers	S.A.E.
Specific gravity	sp. gr.
Square centimetres	cm^2
Square inches	in^2
Standard	std
Standard wire gauge	s.w.g.
Synchronizer/synchromesh	synchro.
Third	3rd
Top dead centre	T.D.C.
Twin carburetters	TC
United Kingdom	UK
Volts	V
Watts	W
Screw threads	
American Standard Taper Pipe	N.P.T.F.
British Association	B.A.
British Standard Fine	B.S.F.
British Standard Pipe	B.S.P.
British Standard Whitworth	B.S.W.
Unified Coarse	U.N.C.
Unified Fine	U.N.F

LOCATION OF COMMISSION UNIT NUMBERS

The Commission Number is the identification number which is required for registration and other purposes. It is stamped on a plate attached to the left hand bulkhead panel (not U.S.A.) and is visible when the bonnet is raised. On vehicles for the U.S.A. type markets this plate is attached to the body adjacent to the left hand door striker plate and the commission number is also stamped on a small plate visible through the left hand side of the windscreen. The significance of the commission numbers and suffix is as follows:

FH this prefix denotes 'Spitfire 1500' model range. Home market and European.
FM this prefix denotes U.S.A. markets only.
1234 is the accumulated total build of this model.
U denotes U.S.A. type market.
C denotes California market, Catalyst condition.

The commission number plate also bears code symbols for identification of the vehicle's exterior colour, trim material and colour. Refer to Division 04.

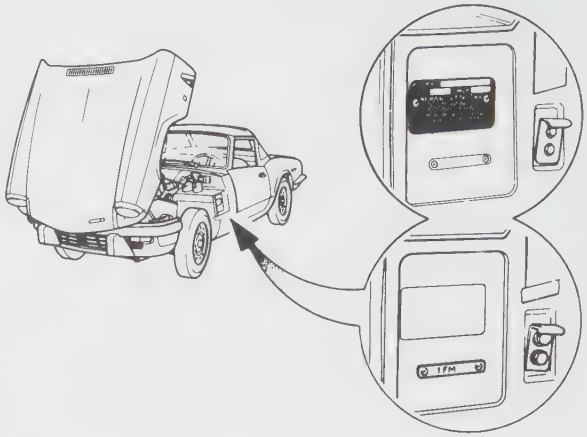

The Engine Number is stamped on a machined flange on the left hand side of the cylinder block. The significance of the engine numbers and suffix is as follows:

FM this prefix denotes model range.
1234 is the accumulated total build of this type.
H denotes high compression. Alternatively:
L denotes low compression. Alternatively:
U denotes U.S.A. market anti pollution.
C denotes California market. Catalyst condition.
E denotes engine unit.

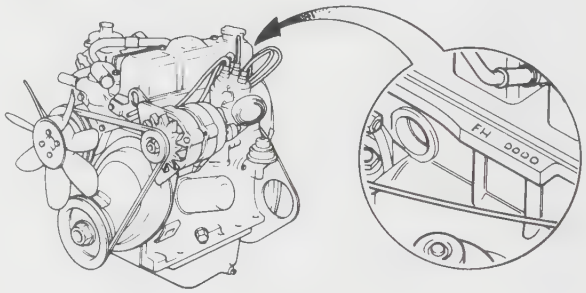

The Gearbox Number is stamped on the right hand side of the gearbox casing. The significance of the gearbox number is as follows:

FR this prefix denotes model range. Non-U.S.A. markets.
FT this prefix denotes U.S.A. market range.
There are no suffix letters.

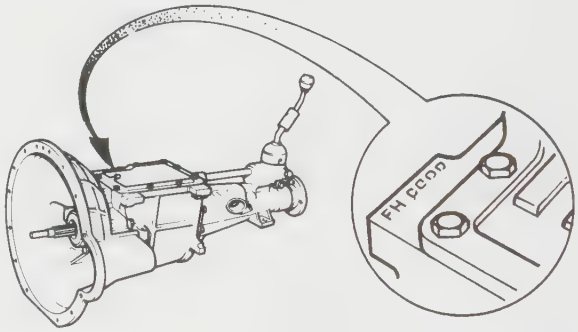

The Rear Axle Number is stamped on the bottom flange of the axle housing. The significance of the axle number is as follows:

FR denotes model range. Non-U.S.A. markets.
FH denotes U.S.A. market range.
1234 is the accumulated total build of this type.
There are no suffix letters.

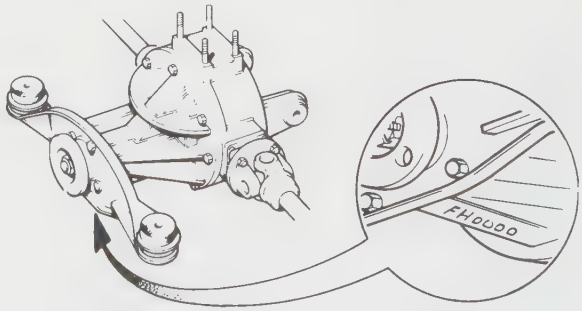

Important: In all communications relating to Service and Spares it is essential to quote commission number, paint and trim codes and unit numbers (if applicable).

ENGINE		U.S.A. Market Differences
Number of cylinders	4 in line	
Bore of cylinders	2.9 in (73.7 mm)	
Stroke of crankshaft	3.44 in (87.5 mm)	
Capacity	91 in^3 (1493 cc)	
Compression ratio	9.0 : 1	7.5 : 1
Maximum power	71 b.h.p. Din at 5500 rev/min	[53 b.h.p. SAE net at 5000 rev/min
Maximum torque	985 lbf/in at 3,000 rev/min equivalent to 136 lb/in^2 b.m.e.p.	830 lbf/in at 2500 rev/min equivalent to 100 lb/in^2 b.m.e.p.]

LUBRICATION	
Oil pump	High capacity rotor type
Oil filter	Full flow type, disposable cartridge
Oil warning light	Extinguishes at 3 to 5 lb/in^2 (0.21 to 0.35 kg/cm^2) oil pressure

COOLING SYSTEM		
Type	Water 'No loss' system	
Circulation	By impellor type pump, Vee belt driven	
Pressure	13 lb/in^2 (0.91 kg/cm^2)	
Thermostat	Opens at 82° C (180° F)	88° C (190° F)
Fan	7 blades 12½ in diameter (318 mm)	13 blades 12½ in dia. (318 mm) with viscous coupling

FUEL SYSTEM		
Tank	Limited fill fuel tank – at rear of vehicle	
Pump	Mechanically operated diaphragm type	
Carburetter	Two SUHS4 side draught	Single Stromberg 150 CD4 side draught
	Californian market Single Stromberg CD4T 150 Auto choke, side draught	
Air Cleaner	Combined air cleaner and silencer with replacement paper elements	U.S.A. models fitted with a temperature controlled inlet air flow.
Crankcase ventilation	Closed circuit breathing from rocker cover to constant depression side of carburetters.	
Evaporative Emission Control	U.S.A. models only, sealed tank filler cap. Vapour emissions from tank are vented via a separator canister to a carbon canister located in the engine compartment. Canister is purged by carburetter depression. An air pump injects air into each exhaust port via a distribution manifold and an E.G.R. valve. A service indicator located in the engine bay illuminates a warning light on the facia when the E.G.R. valve is due for periodical maintenance.	

CLUTCH		
Make/type	Borg and Beck, single dry plate, diaphragm spring type	
Release mechanism	Hydraulically operated	
Plate diameter	7¼ in (184 mm)	
Facing material	Borg and Beck 11046	H. K. Porter 11046

GEARBOX

Manual

Synchromesh . . . . . On forward gears

	O/D Top	Top	O/D 3rd	3rd	2nd	1st	Rev
Gear ratios		1.00		1.39	2.16	3.50	3.99
Overall ratios – U.S.A.	3.10	3.89	4.31	5.42	8.40	13.62	15.51
Non U.S.A.	2.89	3.63	4.03	5.05	7.85	12.70	14.48

Overdrive (Optional)

Make/type . . . . . Laycock J-Type
Operative on . . . . . Top and 3rd gears
Overall ratio . . . . . 0.797 : 1

FINAL DRIVE

Type . . . . . Hypoid bevel gears in rear axle
Ratio – U.S.A. market . . . . . 3.89 : 1
Non U.S.A. market . . . . . 3.63 : 1

EFFECTIVE GEARING (Approximate valves depending on type and condition of tyre fitted)

	O/D Top	Top	O/D 3rd	3rd	2nd	1st
Engine speeds (rev/min) at road speed of 10 mph – U.S.A. market	474	595	660	827	1282	2084
Non U.S.A. market	442	555	616	772	1200	1942
10 km/h – U.S.A. market	294	369	410	513	796	1293
Non U.S.A. market	275	345	383	480	746	1218

ROAD SPEED DATA (Approximate valves depending on type and condition of tyre fitted)

Road speed at 1,000 rev/min engine speed
O/D Top – U.S.A. market . . . . . 21.2 mph (34 km/h)
Non U.S.A. market . . . . . 22.6 mph (36.4 km/h)
Top gear – U.S.A. market . . . . . 16.7 mph (27.0 km/h)
Non U.S.A. market . . . . . 18.0 mph (29.0 km/h)

STEERING

Make/Type . . . . . Alford & Alder, rack and pinion
Turning circle . . . . . 24 feet (7.3 metres)
Steering wheel diameter . . . . . 14.5 in (368 mm)
Turns lock to lock 3¾

BRAKE SYSTEM

Operation:
Foot pedal . . . . . Hydraulic on all four wheels – U.S.A. market: Tandem master cylinder operating front and rear brakes independently
Hand brake . . . . . Mechanical on rear wheels only

FRONT

Type . . . . . Caliper disc
Dimensions . . . . . Disc diameter 9 in (229 mm)
Lining area . . . . . 14.8 in^2 (95 cm^2)
Swept area . . . . . 150.0 in^2 (967 cm^2)

REAR		U.S.A. Market Differences
Type	Drum with leading and trailing shoes	
Dimensions	7 in dia. x 1¼ in wide (178 mm x 32 mm)	
Lining area	34.0 in² (220 cm²)	
Swept	55.0 in² (355 cm²)	

WHEELS AND TYRES	
Wheels	4½J x 13 in Steel disc type
Tyres	155SR x 13 in radial ply
Tyre pressures – front	21 lb/in² (1.476 kg/cm²)
– rear	26 lb/in² (1.828 kg/cm²)

CHASSIS DATA		
Wheelbase	83 in	2110 mm
Track (2 up condition):		
front	49 in	1244 mm
rear	50 in	1270 mm
Wheel alignment (2 up condition)		
front	0 to 1/16 in toe in	0 to 1.5875 mm
rear	0 to 1/16 in toe in	0 to 1.5875 mm
Ground clearance (2 up condition)	5 in	127 mm
Camber (2 up condition)		
front	2° positive ± ½°	
rear	3¼° negative ± 1°	
Caster (2 up condition)	4½° ± ½°	
King Pin inclination (2 up condition)	6¾° ± ¾°	

ELECTRICAL EQUIPMENT	
Electrical System	12 volt negative earth
Battery capacity	40 amp hour at 20 hour rate
Alternator type	Lucas 16 ACR output 34 amps
Starter motor	M.35 J inertia type

OVERALL DIMENSIONS		
Length	149 in (3785 mm)	155.25 in (3943 mm) — 1976-1977: 156.3 in (4038 mm)
Width	58.5 in (1488 mm)	
Height (unladen) to top of windscreen	44.25 in (1125 mm)	43.7 in (1110 mm)
Soft top hood erect	45.8 in (1162 mm)	45.6 in (1159 mm)
Hard top	45.2 in (1148 mm)	45.4 in (1153 mm)
WEIGHTS (approx)		
Dry (excluding extra equipment)	15 cwt (763 kg)	15 3/4 cwt (804 kg) — 1976-77: 1761 lb (799 kg)
Basic Kerb (including water, oil, fuel and tools)	15½ cwt (792 kg)	16 1/4 cwt (829 kg) — 1976-77: 1814 lb (823 kg)
Kerb (including optional extras, water, oil, etc.)	16½ cwt (841 kg)	17 1/2 cwt (876 kg) — 1976-77: 1900 lb (862 kg)
Maximum gross vehicle weight	20½ cwt (1036 kg)	20 3/4 cwt (1061 kg) — 1976-77: 2339 lb (1061 kg)

TOWING INFORMATION	
Maximum recommended trailer weight	12 cwt (610 kg) when trailer being towed is equipped with brakes 3.94 cwt (200 kg) when trailer being towed is not equipped with brakes, providing that the total car and trailer laden weights do not exceed 20.89 cwt (1112 kg)
Maximum starting gradient (fully laden car and trailer)	5.5 — With car engine in peak condition
Maximum climbable gradient (fully laden car and trailer)	4.3 — With car engine in peak condition

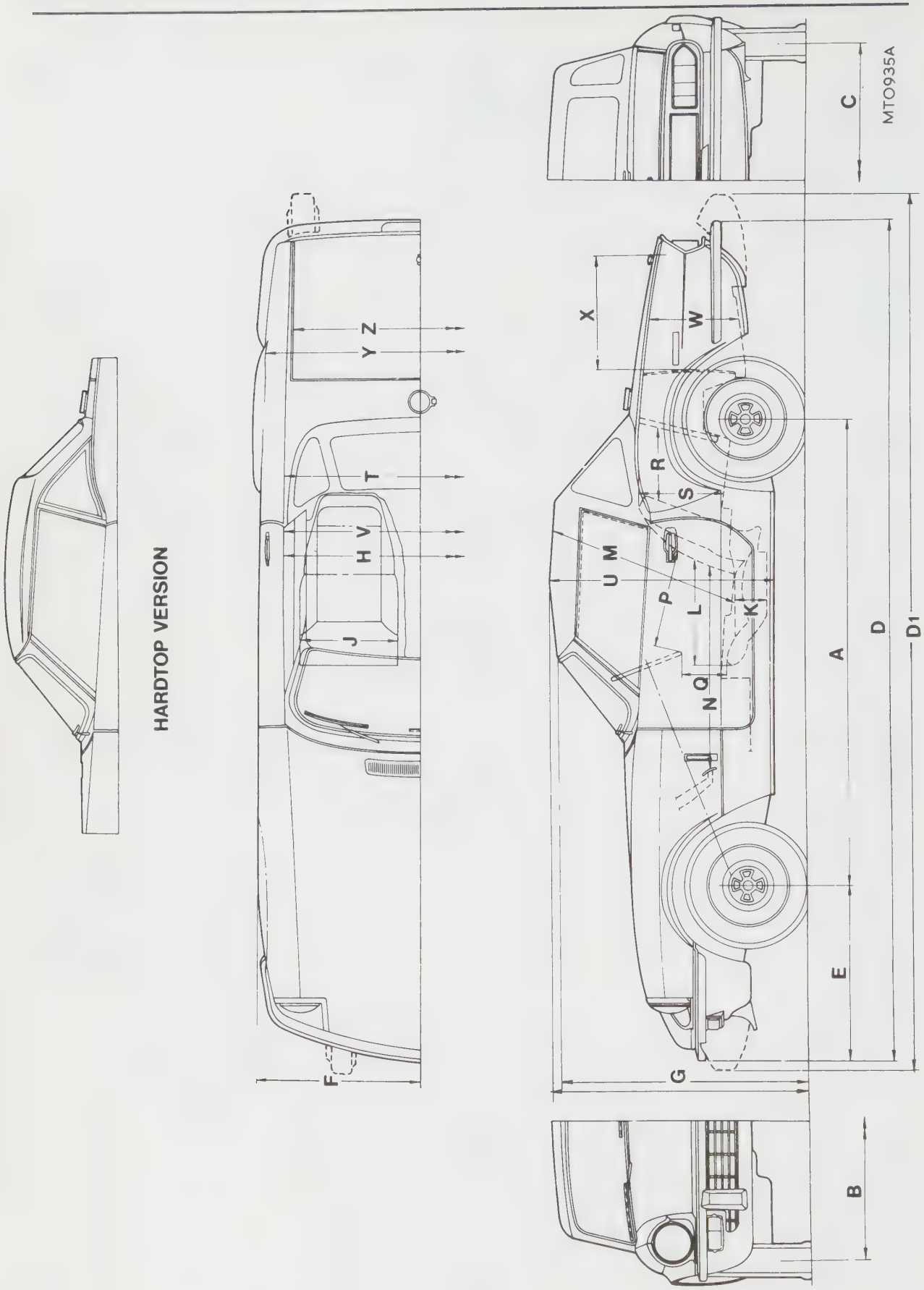
HARDTOP VERSION
MTO935A
A
B
C
D
D1
E
F
G
H
J
K
L
M
N
P
Q
R
S
T
U
V
W
X
Y
Z

VEHICLE DIMENSIONS (Approximate)

Dim.	Description	Inches	mm
A.	Wheelbase	83.00	2108
B.	Front track	49.00	1244
C.	Rear track	50.00	1270
D.	Overall length	149.00	3785
$D._1$	Overall length — U.S.A. market condition (1975)	155.25	3943
	Overall length — U.S.A. market condition (1976-77)	156.30	4038
E.	Front overhang	31.06	788
	Front overhang — U.S.A. market condition (1975)	34.50	876
	Front overhang — U.S.A. market condition (1976-77)	35.00	889
F.	Overall width	58.50	1488
G.	Height, soft top erect	45.75	1160
	Height, to top of windscreen	44.25	1125
	Height, to top of windscreen — U.S.A. market condition	45.20	1148
	Height, with hard top — U.S.A. market condition	45.40	1153
H.	Width – door to door (shoulder height)	45.50	1156
J.	Seat width	18.00	457
K.	Seat height – floor to cushion	7.50	191
L.	Seat depth	20.00	508
M.	Headroom from seat cushion	35.00	889
N.	Seat squab to steering wheel		
	Maximum	41.50	1055
	Minimum	35.50	902
P.	Seat squab to steering wheel		
	Maximum	18.00	475
	Minimum	12.00	305
Q.	Seat cushion to steering wheel	7.00	178
R.	Length of luggage space behind seats		
	Maximum	18.00	457
	Minimum	12.00	305
S.	Height – floor to top of seat squab	16.00	406
T.	Width between wheel arches	35.50	902
U.	Maximum interior	40.00	1016
V.	Maximum interior width at hip point	47.50	1208
W.	Luggage compartment height		
	Maximum	17.00	432
	Minimum	7.00	178
X.	Luggage compartment depth		
	Maximum	22.00	560
	Minimum	17.00	432
Y.	Luggage compartment width (between wheel arches)		
	Maximum	48.00	1220
	Minimum	35.50	902
Z.	Luggage compartment effective opening width	42.00	1068

PAINT AND TRIM CODING SYSTEM

The commission number plate bears code symbols for identification of the vehicle's exterior colour, trim material and trim colour.

Colour Code

Nine basic colours are allocated a number as shown in the table. Shades of these colours are classified as 1st shade, 2nd shade, 3rd shade, etc. The number of each shade change prefixes the basic colour to indicate the shade colour. Dual colours are identified by two code numbers separated by a stroke, e.g. 19/26 denotes 'White' and 'Wedgwood', the predominant colour being white, this symbol being quoted first.

The main trim material is identified by prefixing the colour code number with a letter, e.g.:

Leathercloth	No prefix letter
Leather	Prefix letter H
Cloth	Prefix letter C

Basic colour	Basic colour No.	1st shade	2nd shade	3rd shade	4th shade	5th shade	6th shade	7th shade	8th shade	9th shade	10th shade	11th shade	12th shade	13th shade	14th shade
Black	01	11													
Red	02	12 Matador	22 Cherry	32 Signal	42 Burgundy	52 Scarlet	62 Inca Red	72 Pimento	82 Carmine	92 Magenta					
Brown	03	13 Light Tan	23 Sienna	33 New Tan	43 Saddle Tan	53 Dark Brown	63 Chestnut	73 Maple	83 Maple	93 Russet					
Yellow	04	14 Jonquil	24 Wimpey	34 Jasmine	44 Beige	54 Saffron	64 Mimosa	74 Beige	84 Topaz	94 Inca					
Green	05	15 Cactus	25 Conifer	35 Olive	45 Lichfield	55 Laurel	65 Emerald	75 British Racing Green	85 Java						
Blue	06	16 Midnight	26 Wedg-wood	36 Dark Blue	46 Renoir	56 Royal	66 Valencia	67 Print Blue	86 Navy	96 Sapphire	106 Mallard	116 Ice	126 French	136 Delft	146 Tahiti
Purple	07	17 Damson	27 Shadow Blue												
Grey	08	18 Gunmetal	28 Dark Grey	38 Phantom	48 Dolphin	58 Shadow Blue	68 Slate	78 Grey							
White	09	19 White	29 Sebring White	39 Honey-suckle											

Thus: Paint 19/26 Trim 16 denote that the vehicle is painted 'White' and 'Wedgwood', and trimmed in leathercloth coloured Midnight Blue.

NOTE: Acrylic paints bear the suffix 'A'.

ENGINE

Firing order	1 3 4 2	
No. 1 cylinder	At front	
Idle speed	800 ± 100 rpm – U.S.A. market only 750 ± 100 rpm – Non U.S.A. markets	
Fast idle speed (cold)	1100 to 1300 rev/min all markets	
Fast idle speed (hot)	1700 to 1900 rev/min	
Valve clearance (cold)	0.010 in (0.25 mm) inlet and exhaust	
Valve clearance adjustment	Screw and locking nut on rocker	
Location of timing marks	Scale on front engine cover, mark on crankshaft pulley	
Valve timing	U.S.A. Markets	Other Markets
Inlet opens	18° B.T.D.C.	18° B.T.D.C.
closes	58° A.B.D.C.	58° A.B.D.C.
Exhaust opens	58° B.B.D.C.	58° B.B.D.C.
closes	18° A.T.D.C.	18° A.T.D.C.
Ignition timing		
Static	10° B.T.D.C.	10° B.T.D.C.
Dynamic	Static time only	2° A.T.D.C. at idle

CARBURETTER

Make/Type	Californian market single Stromberg CD4 T150 Auto Choke Side Draught Single Stromberg 1.50 CD4 – U.S.A. market Two SU HS4 – Non U.S.A. markets	
Needle	ABT – Non U.S.A. markets	BIDL – U.S.A. markets
CO reading at idle (U.S.A. market)	1.5% Nominal Min. 0.5% Max. 2.5%	
Procedure for setting	Disconnect and plug the air injection system (downstream of the diverter valve vent pump to atmosphere) and adjust the mixture strength with the external adjuster. To give larger adjustments move the metering needle using a special tool.	

IGNITION COIL

Make/Type	Lucas 15C6
Primary winding resistance	1.30 to 1.45 ohms

BALLAST RESISTOR – resistance wire built into the harness

IGNITION DISTRIBUTOR

Make/Type	
U.S.A. market	Lucas 45DE4 (Electronic pointless Distributor)
Non U.S.A. markets	Lucas 45D4
Rotation viewed on rotor	Anti-clockwise
Dwell angle – Non U.S.A. markets	38° to 40°
Capacitor capacitance – Non U.S.A. market	0.18 to 0.23 mfd
Contact Breaker gap	0.014 into 0.016 in (0.35 to 0.40 mm)
Centrifugal advance	See 86.35.00
Vacuum advance	See 86.35.00

SPARKING PLUGS

Make/Type	
U.S.A. market	Champion N12Y
Non U.S.A. market	Champion N9Y
Gap	0.025 in (0.64 mm)

TIGHTENING TORQUES

Operation	Description	Specified Torque (lbf. ft.)	(kgf. m.)
ENGINE			
Air cleaner to backplate	¼" UNF x ½" setscrew	8	1.1
Air cleaner to carburettor	5/16" UNC x 2⅛" bolt	8	1.1
Alternator to mounting bracket and front engine plate	5/16" UNF x 4⅞" bolt	22	3.0
Alternator to adjusting link	5/16" UNC x 1" setscrew	20	2.8
Clutch attachment to flywheel	5/16" UNF x ⅝" setscrew	22	3.0
Connecting rod bolt { Colour Dyed	⅜" UNF x 1.65" bolt	50	6.9
Connecting rod bolt { Phosphated	⅜" UNF x 1.65" bolt	46	6.4
Chainwheel to camshaft	5/16" UNF setscrew	24	3.3
Crankshaft pulley nut	1" x 16 T.P.I.	150	20.7
Cylinder block drain plug	½" x 20 NPT	35	4.8
Cylinder head to block	⅜" UNF stud	46	6.4
Distributor to pedestal	5/16" UNF x 2" bolt	20	2.8
Fan attachment	¼" UNF x ¾" setscrew	9	1.2
Flywheel to crankshaft	⅜" UNF x 1.03" bolt		
	Cad. Plated	40	5.5
	Parkarised	45	6.2
Fuel pump to cylinder block	5/16" x 1.16" stud	14	1.9
Gearbox and rear engine plate to block	5/16" UNF x 1.56" stud	14	1.9
Manifold inlet to exhaust	5/16" UNF stud	14	1.9
Manifold to head	⅜" UNF stud	25	3.5
Main bearing cap bolts	7/16" UNF x 3" bolt	65	9.0
Oil sump drain plug	⅜" Dryseal taper plug	25	3.5
Oil sump to block	5/16" UNF x ⅝" setscrew	20	2.8
Oil pressure switch plug to cylinder head	⅜" x 18 NP Tapered plug	14	1.9
Oil seal block attachment	5/16" UNF x 0.94" screw	14	1.9
Rocker cover to head	5/16" UNF x 4.13" stud	2	0.3
Rocker pedestal to cylinder head	⅜" UNF x 3.09" stud	34	4.7
Rear crankshaft seal	5/16" UNF x 1⅛" setscrew	20	2.8
Rear engine mounting platform on frame	5/16" UNF x ⅝" setscrew	20	2.8
Sealing block to engine plate	5/16" UNF x ⅝" setscrew	20	2.8
Spark plug to head	14 mm x ¾" long thread	20	2.8
Starter motor attachment	⅜" UNF x 2¼" bolt	34	4.7
Timing cover to front engine plate	5/16" UNF x ⅜" setscrew	10	1.4
	5/16" UNF x ⅞" setscrew	20	2.8
	5/16" UNF x 1.16" stud	16	2.2
Water elbow to water pump	5/16" UNF x 1¾" bolt	20	2.8
	5/16" UNF x 1" setscrew	20	2.8
Water pump bearing housing to pump	5/16" UNF x 1.16" stud	14	1.9
Water pump to cylinder head	5/16" UNF x 2¾" bolt	20	2.8
	5/16" UNF x 2¼" bolt	20	2.8
	5/16" UNF x 2⅜" bolt	20	2.8

Operation	Description	Specific Torque (lbf. ft)	(kgf. m.)
GEARBOX			
Boss to clutch housing	$\frac{5}{16}$" UNF x $\frac{7}{8}$" setscrew	20	2.8
Clutch housing to gearbox case	$\frac{3}{8}$" UNF x 1" wedgelock bolt	32	4.4
	$\frac{3}{8}$" UNF x $1\frac{1}{8}$" setscrew	32	4.4
Cover to gearbox case	¼" UNF x ½" setscrew	9	1.2
Cover plate to top cover	¼" UNF x ½" setscrew	9	1.2
Flange to mainshaft	$\frac{5}{8}$" UNF nut	120	16.6
Magnetic drain plug	$\frac{3}{8}$" x 18" Dryseal plug	25	3.5
Oil filler plug	$\frac{3}{8}$" x N.P. taper plug	25	3.5
Reversing light and seat belt switches	10 mm switch	7	1.0
Reverse idler spindle locating screw	$\frac{5}{16}$" UNF x 1½" pointed screw	14	1.9
Selector shaft to forks	$\frac{5}{16}$" UNF x 0.84" taper setscrew	37	5.1
Slave cylinder to boss	$\frac{5}{16}$" UNF x 2¼" bolt	9	1.2
Slave cylinder to clutch housing	8 mm x 35 mm bolt	21	2.9
Slave cylinder attachment	$\frac{5}{16}$" UNF x $\frac{7}{8}$" setscrew	20	2.8
Top cover to gearbox case	¼" UNF x $1\frac{7}{8}$" bolt	10	1.4
	¼" UNF x $\frac{7}{8}$" setscrew	10	1.4
OVERDRIVE – 'J' TYPE			
Adaptor to gearbox	¼" UNF setscrew	9	1.2
Overdrive to adaptor	¼" stud	7	1.0
Overdrive to rear engine mounting	$\frac{3}{8}$" UNF/UNC stud	25	3.5
Rear engine mounting attachment	$\frac{7}{16}$" UNF bolt	38	5.2
Steady strap to overdrive unit	$\frac{5}{16}$" UNF stud	20	2.8
PROPELLOR SHAFT AND REAR AXLE			
Axle mounting plate to hypoid housing	$\frac{3}{8}$" UNF	38	5.2
Back plate attachment (axle shaft and hub)	$\frac{5}{16}$" UNF bolt	20	2.8
Bearing cap to housing	$\frac{3}{8}$" UNF x 1.84" bolt	38	5.2
Crown wheel to differential unit	$\frac{3}{8}$" UNF x 0.72" bolt	46	6.4
Front and rear attachment of prop. shaft	$\frac{3}{8}$" UNF x 1" bolt	34	4.7
Hub to axle shaft	$\frac{5}{8}$" UNF	120	16.6
Hypoid housing to rear axle housing	$\frac{5}{16}$" UNF x 1" setscrew	20	2.8
Hypoid flange to pinion	$\frac{5}{8}$" UNF	120	16.6
Plugs, drain and filler	$\frac{3}{8}$" x 18 Dryseal	25	3.3
Rear axle to frame	$\frac{7}{16}$" UNF x 7.4" bolt	45	6.2
Rear axle nose mounting to frame	$\frac{3}{8}$" UNF Special stud	34	4.7
Road spring attachment	$\frac{3}{8}$" UNF stud	34	4.7
Shaft joint to inner axle shaft	$\frac{3}{8}$" UNF stud	46	6.4

Operation	Description	Specific Torque (lbf. ft.)	(kgf. m.)
FRONT SUSPENSION			
Anti-roll bar attachment to chassis	5/16" UNF 'U' bolt	4	0.6
Anti-roll bar link assembly	7/16" UNF	45	6.2
Anti-roll bar stud	3/8" UNF stud	14	1.9
Ball assembly to upper wishbone	5/16" UNF x 2¼" bolt	20	2.8
Ball pin to vertical link	7/16" UNF ball pin	38	5.2
Brake caliper to mounting plate	7/16" UNF x 1.31" bolts	65	9.0
Brake disc	3/8" UNF x 1" bolt	34	4.7
Damper attachment	7/16" UNF bolt	46	6.4
Front suspension and engine mounting bracket to frame	3/8" UNF x 1" setscrew 3/8" UNF x 1 1/8" bolt	32	4.4
Fulcrum bracket to lower wishbone	3/8" UNF x 2 3/8" bolt	32	4.4
Fulcrum bracket to upper wishbone	3/8" UNF x 2¼" bolt 3/8" UNF x 2½" bolt	32	4.4
Stub axle to vertical link	½" UNF on stub shaft	65	9.0
Tie rod end ball joint assembly	3/8" UNF	32	4.4
Tie rod lever and dust cover to vertical link	7/16" UNF x 1.88" bolt	65	9.0
Trunnion to wishbone	7/16" UNF x 2½" bolt	45	6.2
Wishbone assembly to frame	3/8" UNF stud	25	3.5
REAR SUSPENSION			
Damper fulcrum pin	½" UNF fulcrum pin	48	6.6
Damper lower attachment	7/16" UNF	38	5.2
Pivot bracket to body floor	3/8" UNF x 1 7/8" setscrew	32	4.4
Radius arm attachment to pivot brackets and links	3/8" UNF x 2¼" bolt	32	4.4
Spring to pivot bracket	5/16" UNF x 2 5/8" bolt	20	2.8
Spring ends to vertical links	7/16" UNF bolt	48	6.6
Vertical link plates to rear hub inner	7/16" UNF x 3 3/8" bolt	48	6.6
STEERING			
Ball joint to tie rod lock nut	½" UNF on tie rod	38	5.2
Column lower assembly to bracket	¼" UNF x ½" setscrew	9	1.2
Coupling lower to upper clamp	¼" UNF bolt	9	1.2
Coupling pinch bolt	5/16" UNF x 1¼" bolt	14	2.0
Rack mounting to frame	5/16" UNF 'U' bolt	16	2.2
Road wheel to hub	3/8" UNF stud	48	6.6
Safety clamp socket setscrew	7/16" UNF setscrew	20	2.8
Steering column lock attachment	5/16" UNF torque head screw	Tighten to shear	
Steering column safety clamp	¼" UNF bolt	9	1.2
Steering wheel to column	9/16" UNF on column	34	4.7

Operation	Description	Specific Torque (lbf. ft)	(kgf. m.)
BODY			
Accelerator mounting bracket	$\frac{5}{16}$" UNF x 1½" bolt	20	2.8
Accelerator mounting bracket to dash	¼" UNF x ½" setscrew	9	1.2
Bonnet hinge pivot to support bracket	$\frac{3}{8}$" UNF x 1$\frac{7}{8}$" setscrew	32	4.4
Bumper to rear body wing sides	$\frac{5}{16}$" UNF x ¾" setscrew	14	1.9
Bumper assembly to rear support and support attachment	$\frac{3}{8}$" UNF setscrew	32	4.4
Clutch and brake pedal mounting bracket	¼" UNF x $\frac{5}{8}$" setscrew	9	1.2
Clutch and brake master cylinder attachment	$\frac{5}{16}$" UNF x $\frac{7}{8}$" setscrew	20	2.8
Door hinge to body	$\frac{5}{16}$" UNF x $\frac{7}{8}$" setscrew	20	2.8
Door hinge to door	$\frac{5}{16}$" UNF x ¾" setscrew	14	1.9
Seat slide attachment	¼" UNF x $\frac{7}{8}$" setscrew	9	1.2
Seat slide to floor	¼" UNF x ¾" setscrew	9	1.2
Seat belt attachment to tunnel and sill	$\frac{7}{16}$" UNF special bolt	32	4.4
Seat belt attachment to rear wheel arch	$\frac{7}{16}$" UNF special bolt	32	4.4
U.S.A. Markets			
Front bumper to impact shock absorber	¼" UNF x $\frac{7}{8}$" setscrew	9	1.2
Front impact shock absorber to pivot support bracket	¼" UNF x $\frac{5}{8}$" setscrew	9	1.2
Rear bumper impact shock absorber attachment	¼" UNF x $\frac{7}{8}$" / ¼" UNF x 1" setscrew	9	1.2
Rear bumper to support brackets	$\frac{5}{16}$" UNF x $\frac{5}{8}$" setscrew	20	2.8
Rear impact reinforcements to trunk floor	$\frac{3}{8}$" UNF x $\frac{7}{8}$" setscrew / $\frac{3}{8}$" UNF x 1½" bolt	32	4.4
Rear impact shock absorber side wall stiffening	¼" UNF x ¾" setscrew	9	1.2

RECOMMENDED LUBRICANTS – BRITISH ISLES

(The products recommended are not listed in order of preference)

COMPONENT	BP	CASTROL	DUCKHAMS	ESSO	MOBIL	PETROFINA	REGENT	SHELL
††ENGINE CARB. DASHPOTS AND OIL CAN	Super Visco-static 20-50	Castrol GTX	Duckhams Q20-50	Esso Uniflo	Mobiloil Super 10W/50 or Mobiloil Special 20W/50	Fina Super Grade Motor Oil SAE 20W/50	Havoline Motor Oil 20W-50	Shell Super Multigrade
GEARBOX OVERDRIVE REAR AXLE LOWER STEERING SWIVELS	BP Gear Oil SAE 90 EP	Castrol Hypoy	Duckhams Hypoid 90	Esso Gear Oil GX 90/140	Mobilube HD 90	Fina Pontonic XP 90-140	Multigear Lubricant EP 90	Shell Spirax 90 EP
FRONT & REAR HUBS BRAKE CABLES GREASE GUN	BP Energrease L2	Castrol LM Grease	Duckhams LB 10	Esso Multi-purpose Grease H	Mobilgrease MP	Fina Marson HTL 2	Marfak All purpose	Shell Retinax A

RECOMMENDED LUBRICANTS – OVERSEAS

(The products recommended are not listed in order of preference)

COMPONENT	Air temp. °C	Air temp. °F	API Designation	BP	CASTROL	DUCKHAMS	ESSO	MOBIL	PETROFINA	SHELL	TEXACO
††ENGINE CARB. DASHPOTS AND OIL CAN	over 30	over 80	SD or SE	† BP Super Visco-Static	Castrol GTX Castrol Super 20W/50	Q20/50	Esso Extra Motor Oil 20W/50	Mobiloil Super 10W/50 Mobiloil Special 20W/50	Fina Supergrade Motor Oil 20W/50	† Shell Super Motor Oil	Havoline 20W/50
	30 to 0	80 to 30	SD or SE			Q10-50	Uniflo				
	0 to −20	30 to −4	SD or SE		Castrolite or Castrol GTZ	Q10-40	Esso Extra Motor Oil 10W/30	Mobiloil Super 10W/50	Fina Supergrade Motor Oil 10W/40		Havoline 10W/30
	below −20	below −4	SD or SE		Castrol 5W/20	Q5-30	Esso Extra Motor Oil 5W/20	Mobiloil 5W/20	Fina Supergrade 5W/30		Havoline 5W/20
GEARBOX OVERDRIVE AND REAR AXLE LOWER STEERING SWIVELS	over 0	over 30	GL4	BP Gear Oil SAE 90 EP	Castrol Hypoy	Duckhams Hypoid 90	Esso Gear Oil GX 90	Mobilube HD 90	Fina PONTONIC MP SAE 90	Shell Spirax 90 EP	Multigear Lubricant EP 90
	below 0	below 30	GL4	BP Gear Oil SAE 80 EP	Castrol Hypoy 80	Duckhams Hypoid 80	Esso Gear Oil GX 80	Mobilube HD 80	Fina PONTONIC MP SAE 80	Shell Spirax 80 EP	Multigear Lubricant EP 80
FRONT AND REAR HUBS BRAKE CABLES SUSPENSION BALL JOINTS (SWEDISH MARKET ONLY) GREASE GUN				BP Energrease L2	Castrol LM Grease	Duckhams LB 10	Esso Multi-purpose Grease H	Mobilgrease MP	Fina Marson HTL 2	Shell Retinax A	Marfax All-purpose

† OILS MARKED THUS ARE AVAILABLE IN MULTIGRADE FORMS WITH VISCOSITY CHARACTERISTICS APPROPRIATE TO THE AMBIENT TEMPERATURE RANGE IN INDIVIDUAL MARKETS.

†† WHERE CIRCUIT RACING OR OTHER SEVERE COMPETITIVE EVENTS ARE CONTEMPLATED IT IS ADVISABLE, IN VIEW OF THE INCREASED OIL TEMPERATURE ENCOUNTERED, TO USE OILS OF HIGH VISCOSITY.

REFERENCES TO UNITED KINGDOM AND CONTINENTAL RECOMMENDED LUBRICANTS ARE MADE FOR THE GUIDANCE OF ARMED FORCES PERSONNEL BASED IN THESE COUNTRIES AND OVERSEAS VISITORS.

RECOMMENDED LUBRICANTS AND ANTIFREEZE SOLUTIONS – U.S.A. MARKET

COMPONENT	TEMPERATURE RANGE	SERVICE CLASSIFICATION	S.A.E. VISCOSITY SPECIFICATION
Engine and Carb Dashpots	Above 14°F (–10°C)	API S.E.	SAE 10W/50; SAE 20W/50; SAE 10W/40; SAE 20W/40;
	–5°F to 50°F (–20°C to + 10°C)		SAE 10W/30; SAE 10W/40; SAE 10W/50
	Below 14°F (–10°C)		SAE 5W/20; SAE 5W/30
Gearbox/ Overdrive and Final Drive Lower Steering Swivels	Above 30°F (0°C) Below 30°F (0°C)	API G.L.4	SAE 90 Hypoid SAE 80 Hypoid
Steering Rack Hubs & Chassis Grease Points	All	NLGI 2 Multipurpose Grease	
Brake and Clutch Fluid	All	DOT3 (FMVSS116) and SAE Specification J.1703d	
Anti-freeze	Permanent type ethylene glycol base with suitable inhibitor for mixed metal system		
Windscreen Washer	Windscreen Washer Antifreeze Fluid (Proprietary Brands)		

RECOMMENDED HYDRAULIC FLUIDS

Clutch and Brake Reservoirs: Castrol Girling Brake and Clutch Fluid – Crimson or Unipart 550 Brake Fluid.
Where these proprietary brands are not available, other fluids which meet the S.A.E. J.1703 specification may be used.

RECOMMENDED FUEL

The Triumph Spitfire engine is designed to operate on fuel having a minimum octane rating of 97 (High compression engines) or 91 (Lower compression engines): this is equivalent to the British 4 star and 2 star ratings respectively.
Where such fuels are not available and it is necessary to use fuels of lower or unknown rating, the ignition timing must be retarded from the specified setting, just sufficiently to prevent audible detonation (pinking) under all operating conditions, otherwise damage to the engine may occur.

THE SPITFIRE 1500 (CATALYTIC CONVERTER SPECIFICATION) PERFORMS EFFICIENTLY ON UNLEADED FUELS OF 91 OCTANE.

NOTE: IT IS ESSENTIAL THAT UNLEADED FUELS ARE USED IN THIS VEHICLE OTHERWISE SERIOUS DAMAGE CAN BE CAUSED TO THE CATALYTIC CONVERTER.

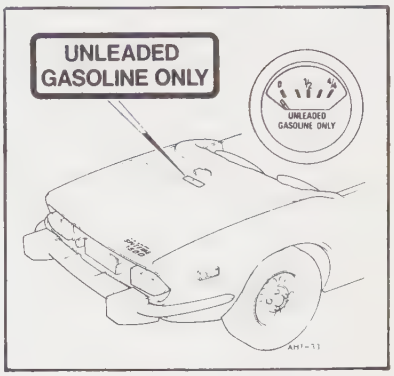

IMPORTANT: When cars for the U.S.A. market enter the 'United States' the ignition timing must be set to suit the use of the recommended grade of fuel AND TO COMPLY WITH REGULATIONS ON EMISSIONS FROM THE CRANKCASE AND EXHAUST.

ANTI-FREEZE SOLUTIONS

Refer to table opposite

ANTI-FREEZE CONCENTRATION		25%	30%	35%	50%
SPECIFIC GRAVITY OF COOLANT AT 15.5° C (60° F)		1.039	1.048	1.054	1.076
ANTI-FREEZE QUANTITY (Cooling system with heater)	PINTS (USA)	2.4	2.9	3.4	4.8
	PINTS (IMPERIAL)	2.0	2.4	2.8	4.0
	LITRES	1.1	1.4	1.6	2.3
DEGREE OF PROTECTION	**Complete** Car may be driven away immediately from cold	−12° C 10° F	−16° C 3° F	−20° C −4° F	−36° C −33° F
	Safe Limit Coolant in mushy state. Engine may be started and driven away after short warm-up period	−18° C 0° F	−22° C −8° F	−28° C −18° F	−41° C −42° F
	Lower Protection Prevents frost damage to cylinder head, block and radiator. Thaw out before starting engine	−26° C −15° F	−32° C −26° F	−37° C −35° F	−47° C −53° F

CAPACITIES	U.S.A.	Imperial	Metric
Fuel tank	8.7 gallons	7.25 gallons	33 litres
Engine sump and oil filter	9.6 gallons	.8 pints	4.5 litres
Engine sump drain and refil	8.4 pints	.7 pints	4.0 litres
Gearbox	1.8 pints	1.5 pints	0.85 litres
Gearbox and overdrive	3.25 pints	2.7 pints	1.5 litres
Rear axle	1.2 pints	1 pint	0.57 litres
Cooling system (inc. water bottle)	8.4 pints	7 pints	4.0 litres
Cooling system (inc. water bottle) with heater	9.6 pints	8 pints	4.5 litres

MAINTENANCE

Maintenance Summary Chart 10.6

Lubrication Chart 10.10

Maintenance 10.00.01

MAINTENANCE SUMMARY

KEY: MILEAGE x 1000 MILES

U.K. and European Market

Operation No.	Mileage
10.10.03	1
10.10.06	3, 9, 15, 21, 27, 33, 39, 45
10.10.12	6, 18, 30, 42
10.10.24	12, 24, 36, 48

U.S.A Markets

Operation No.	Mileage
10.10.03	1
10.10.14	3, 9, 16, 22, 28, 34, 41, 47
10.10.26	6, 19, 31, 44
10.10.28	12.5, 37.5
10.10.50	25, 50

Operation Description	U.K. & Europe				U.S.A. Market				
Key to operation numbers and mileage intervals	10.10.03	10.10.06	10.10.12	10.10.24	10.10.03	10.10.14	10.10.26	10.10.28	10.10.50
ENGINE									
1. Check/top up engine oil level		X				X			
2. Check/top up cooling system	X	X	X	X	X	X	X	X	X
3. Check/adjust operation of screen washers and top up reservoir	X	X	X	X	X	X	X	X	X
4. Renew engine oil	X		X	X	X		X	X	X
5. Renew engine oil filter			X	X			X	X	X
6. Lubricate accelerator control linkage (and pedal pivot) – check operation	X		X	X	X		X	X	X
7. Check cooling/heater system for leaks and hoses for security and condition	X	X	X	X	X	X	X	X	X
8. Check for oil leaks	X	X	X	X	X	X	X	X	X
9. Check/adjust torque of cylinder head nuts/bolts	X				X				
10. Check driving belts, adjust or renew	X	X	X	X	X			X	X
11. Check security of engine mounting	X				X				
12. Check/adjust carburetter idle settings	X		X	X	X			X	X
13. Top up carburetter piston dampers	X		X	X	X			X	X
14. Renew carburetter air cleaner element(s)				X				X	X
15. Check/adjust deceleration by-pass valve					X			X	X
16. Check security of EGR operating lines					X				
17. Check EGR system								X	X
18. Check/adjust choke settings (Manual chokes)					X			X	X
19. Check crankcase breathing and evaporative loss system hoses for security					X				
20. Check crankcase breathing and evaporative loss systems; check hoses/pipes and restrictors for blockages, security and condition								X	X
21. Renew adsorption canister (at 50,000 interval only)									X
22. Check/adjust valve clearances	X		X	X	X			X	X
23. Clean fuel pump filter	X			X					
IGNITION									
24. Clean/adjust spark plugs			X						
25. Renew spark plugs				X				X	X
26. Check distributor points; adjust or renew			X	X					
27. Lubricate distributor	X		X	X				X	X
28. Check/adjust ignition timing using electronic equipment					X			X	X
29. Check/adjust ignition timing and distributor characteristics using electronic equipment	X		X	X					
30. Check security of distributor vacuum unit line and operation of vacuum unit					X				
31. Check ignition wiring for fraying, chafing and deterioration					X			X	X
32. Check operation of distributor vacuum unit								X	X
33. Clean distributor cap, check for cracks and tracking								X	X
34. Check coil performance on oscilloscope								X	X
TRANSMISSION									
35. Check for oil leaks	X	X	X	X	X	X	X	X	X
36. Check/top up gearbox oil	X		X	X	X		X	X	X
37. Check/top up rear axle/final drive oil	X		X	X	X		X	X	X
38. Check tightness of propeller shaft coupling bolts				X				X	X
39. Check tightness of drive shaft coupling bolts				X				X	X

Key to operation numbers and mileage intervals	U.K. & Europe				U.S.A. Market				
Operation Description	10.10.03	10.10.06	10.10.12	10.10.24	10.10.03	10.10.14	10.10.26	10.10.28	10.10.50
TRANSMISSION -- *continued*									
40. Check clutch pipes for leaks and chafing	X	X	X	X	X	X	X	X	X
41 Check/top up clutch fluid reservoir	X	X	X	X	X	X	X	X	X
42. Lubricate clutch pedal pivots				X				X	X
STEERING AND SUSPENSION									
43. Check for oil/fluid leaks	X	X	X	X	X	X	X	X	X
44. Lubricate steering rack and pinion			X	X			X	X	X
45. Check condition and security of steering unit joints and gaiters	X	X	X	X	X	X	X	X	X
46. Check security of suspension fixings	X			X	X			X	X
47. Adjust front hub bearing end float				X				X	X
48. Check/adjust front (and rear) wheel alignment	X		X	X	X		X	X	X
49. Lubricate steering swivels	X		X	X	X		X	X	X
50. Lubricate rear hubs				X				X	X
BRAKES									
51. Inspect brake pads for wear and discs for condition		X				X			
52. Inspect brake linings/pads for wear and drums/discs for condition			X	X			X	X	X
53. Check/top up brake fluid reservoir	X	X	X	X	X	X	X	X	X
54. Check footbrake operations/adjust to manufacturer's instructions (Manual)	X		X	X	X		X	X	X
55. Check hand brake operation, adjust to manufacturer's instructions	X		X	X	X		X	X	X
56. Lubricate brake pedal pivots				X				X	X
57. Lubricate hand brake mechanical linkage and cable guides			X	X			X	X	X
58. Check visibly hydraulic pipes and unions for chafing, leaks and corrosion	X	X	X	X	X	X	X	X	X
59. Renew hydraulic brake fluid	At 18,000 miles/18 month intervals whichever is the sooner				At 19,000 miles/19 months intervals whichever is the sooner				
ELECTRICAL									
60. Check function of original equipment, i.e. interior and exterior lamps, horns, wipers and warning indicators	X	X	X	X	X	X	X	X	X
61. Check/top up battery electrolyte	X	X	X	X	X	X	X	X	X
62. Clean and grease battery connections			X	X			X	X	X
63. Check/adjust headlamp alignment	X	X	X	X	X	X	X	X	X
64. Check, if necessary renew, wiper blades.		X	X	X		X	X	X	X
65. Check output of charging system					X		X	X	X
FUEL AND EXHAUST PIPES									
66. Check exhaust system for leaks and security	X	X	X	X	X	X	X	X	X
67. Check fuel system for leaks, pipes and unions for chafing and corrosion	X	X	X	X	X	X	X	X	X
68. Renew catalytic converter									X
69. Check condition of fuel filler cap seal								X	X
70. Renew fuel line filter								X	X

Operation Description	U.K. and Europe				U.S.A. Market				
Key to operation numbers and mileage intervals	10.10.03	10.10.06	10.10.12	10.10.24	10.10.03	10.10.14	10.10.26	10.10.28	10.10.50
WHEELS AND TYRES									
71. Check/adjust tyre pressures including spare	X	X	X	X	X	X	X	X	X
72. Check that tyres comply with manufacturer's specification		X	X	X		X	X	X	X
73. Check tightness of road wheel fastenings	X	X	X	X	X	X	X	X	X
74. Check tyres for external cuts in the fabric, exposure of ply or cord structure, lumps or bulges	X				X				
75. Check tyres for tread depth, visually for external cuts in fabric, exposure of ply or cord structure, lumps and bulges		X	X	X		X	X	X	X
*Important – If tyres do not conform with legal requirements report to the owner									
BODY									
76. Lubricate all locks and hinges (not steering lock)	X		X	X	X		X	X	X
77. Check condition and security of seats and seat belts	X	X	X	X	X	X	X	X	X
78. Check rear view mirror for cracks and crazing		X	X	X		X	X	X	X
79. Check operation of all door, bonnet and boot locks	X			X	X			X	X
80. Check operation of seat belt warning system		X	X	X		X	X	X	X
81. Check operation of window controls	X			X	X			X	X
82. Check tightness of subframe/body mountings	X				X				
83. Check operation of seat belt inertia reel mechanism	X	X	X	X	X	X	X	X	X
84. Ensure cleanliness of controls, door handles and steering wheel	X	X	X	X	X	X	X	X	X
ROAD TEST									
85. Road roller test and check function of all instrumentation	X		X	X	X		X	X	X
86. Report additional work required		X	X	X		X	X	X	X

Additional work

Examine all fluid seals and flexible hoses in the brake, clutch and power assisted steering systems and renew if necessary. Examine working surfaces in pistons and bores, in master, slave and wheel cylinders and renew parts where necessary.	At 36,000 miles or 3 year intervals whichever is the sooner	At 37,500 miles or 3 year intervals whichever is the sooner

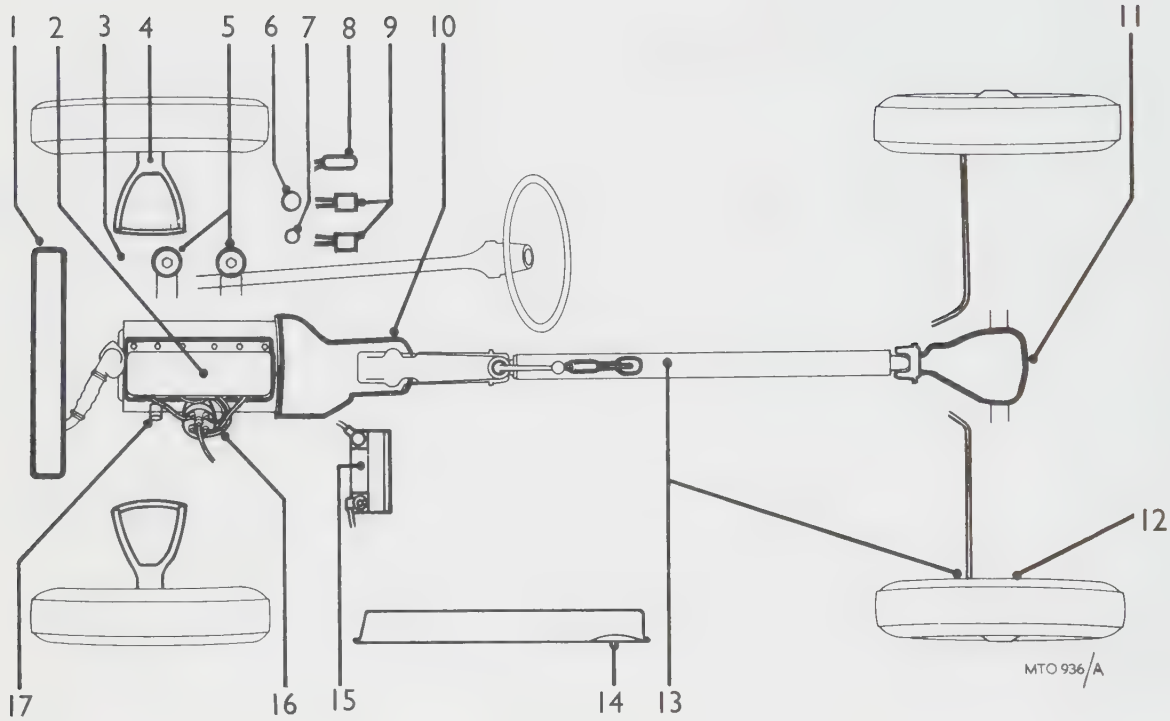
1
2
3
4
5
6
7
8
9
10
11
12
13
14
15
16
17
MTO 936/A

U.K. AND EUROPEAN MARKETS – LUBRICATION CHART

Weekly or before a long journey

1. Check/top up cooling system
2. Check/top up engine oil level

Every 3,000 miles (5,000 km)

1. Check/top up cooling system
2. Check/top up engine oil
6. Check/top up brake fluid reservoir
7. Check/top up clutch fluid reservoir

Every 6,000 miles (10,000 km)

1. Check/top up cooling system
6. Check/top up brake fluid reservoir
7. Check/top up clutch fluid reservoir
2. Renew engine oil
17. Renew oil filter element
8. Lubricate accelerator linkage/pedal fulcrum
15. Clean and grease battery connections
10. Check/top up level of gearbox oil
11. Check/top up level of final drive oil
3. Lubricate steering rack and pinion
4. Using OIL lubricate lower steering swivels

Swedish markets only:
Grease suspension steering ball joints

5. Check/top up carburetter piston dampers
9. Lubricate brake and clutch pedal pivots
13. Lubricate hand brake linkage and cable guides
14. Lubricate all locks, door hinges, strikers and bonnet releases
16. Lubricate distributor

Every 12,000 miles (20,000 km)

1. Check/top up cooling system
6. Check/top up brake fluid reservoir
7. Check/top up clutch fluid reservoir
2. Renew engine oil
17. Renew oil filter
8. Lubricate accelerator linkage/pedal fulcrum
15. Clean and grease battery connections
10. Check/top up level of gearbox oil
11. Check/top up level of final drive oil
3. Lubricate steering rack and pinion
4. Using OIL lubricate lower steering swivels

Swedish markets only:
Grease suspension/steering ball joints

5. Check/top up carburetter piston dampers
9. Lubricate brake and clutch pedal pivots
13. Lubricate hand brake linkage and cable guides
14. Lubricate all locks, door hinges, strikers and bonnet release
16. Lubricate distributor
12. Lubricate rear hubs

U.S.A. MARKET LUBRICATION CHART

Weekly or before a long journey

1. Check/top up cooling system
2. Check engine oil level

At Intervals of 3, 9, 16, 22, 28, 34, 41, 47 miles x 1000

1. Check/top up cooling system
2. Check/top up engine oil
6. Check/top up brake fluid reservoir
7. Check/top up clutch fluid reservoir

At Intervals of 6, 19, 31, 44 miles x 1000

1. Check/top up cooling system
6. Check/top up brake fluid reservoir
7. Check/top up clutch fluid reservoir
2. Renew engine oil
17. Renew oil filter
8. Lubricate accelerator linkage/pedal fulcrum
15. Clean and grease battery connections
11. Check/top up level of final drive oil
3. Lubricate steering rack and pinions
4. Using OIL lubricate lower steering swivels
13. Lubricate hand brake linkage and cable guides
9. Lubricate brake and clutch pedal pivots
14. Lubricate all locks, door hinges, strikers and bonnet release

At Intervals of 12.5, 25, 37.5, 50 miles x 1000

1. Check/top up cooling system
6. Check/top up brake fluid reservoir
7. Check/top up clutch fluid reservoir
2. Renew engine oil
17. Renew oil filter
8. Lubricate accelerator linkage/pedal fulcrum
15. Clean and grease battery connections
11. Check/top up level of final drive oil
3. Lubricate steering rack and pinion
4. Using OIL lubricate lower steering swivels
13. Lubricate hand brake linkage and cable guides
9. Lubricate brake and clutch pedal pivots
14. Lubricate all locks, door hinges, strikers and bonnet release
5. Top up carburetter piston dampers
16. Lubricate distributor

The maintenance summary list on pages 10.6 to 10.10 gives details of mile and kilometer intervals for the following operations. The figure in parentheses to the left of each heading refers to the item number on the summary list.

(1) Check/top up engine oil level

NOTE: Allow time for oil to drain back into sump after running engine.

Stand vehicle on level ground.

1. Withdraw dipstick, wipe it clean and replace in position.
2. Withdraw dipstick again and note oil level.
3. Wipe dipstick clean and replace in position.

   If topping up is necessary:
4. Remove oil filler cap.
5. Add recommended grade of oil, via filler cap to bring level just below high mark on dipstick.

   DO NOT OVERFILL
6. Replace filler cap.
7. Allow time for added oil to drain into sump, then check final oil level using the procedure in 1 to 3 above.

(2) Check/top up cooling system

WARNING: Do NOT remove cooling system filler cap or plugs when engine is hot.

1. Remove radiator expansion tank cap.
2. If necessary, top up expansion tank with soft water to maintain level at approximately half full.
3. Replace cap.

   If the expansion tank is empty:
4. Remove the cooling system filler cap.
5. Add soft water, via filler cap, until the system is full.
6. Replace filler cap.
7. Half fill expansion tank with soft water using the procedure in 1 to 3 above.
8. Run the engine until normal operating temperature is reached, allow engine to cool and re-check cooling system level.

(3) **Check/adjust operation of screen washers and top up reservoir.**

1. Check that the windscreen washer jets are properly adjusted and free of any blockage.
2. Check the fluid level in the translucent reservoir.
   If topping up is necessary:–
3. Wipe clean the reservoir cap and the surrounding area.
4. Remove the reservoir cap.
5. Add soft water to bring the level to within approximately 1″ (25.4 mm) of the top of the reservoir cap.
6. Replace the reservoir cap.

CAUTION: As a precaution against freezing conditions, fill the reservoir with a mixture of one part methylated spirits and two parts water. DO NOT use glycol antifreeze solutions in the washer reservoir, as these may discolour paintwork and damage wiper blades and sealing rubbers.

(4) **Drain the engine oil and refill**

NOTE: This operation is best carried out when the engine is warm and with the vehicle standing level on a ramp or over a pit.

1. Wipe clean the engine drain plug and surrounding area.
2. Place a suitable receptacle under the drain plug.
3. Unscrew the drain plug slowly until oil begins to escape.
4. When the rate of oil flow lessens, remove drain plug from sump and allow oil to drain completely.
5. Wipe clean the drain plug and replace it in sump.
6. Tighten drain plug to 20 to 25 lbf ft (2.8 to 3.5 kgf m).
7. Remove oil filler cap.
8. Add a recommended engine oil, via filler cap, to bring level just below high mark on dipstick. **DO NOT OVERFILL.**
9. Replace oil filler cap.
10. Allow time for added oil to drain into sump, then check final oil level on dipstick.

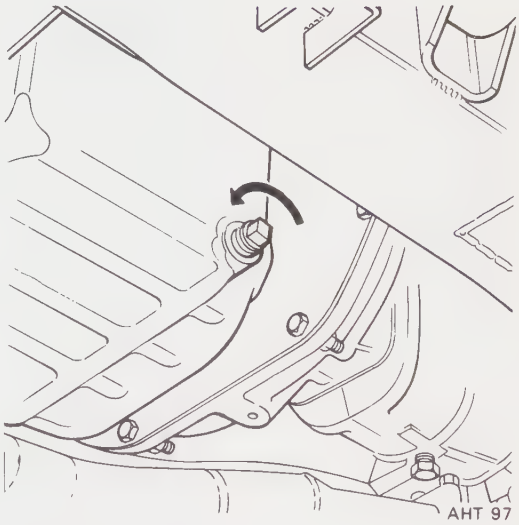

(5) **Renew engine oil filter**

See 12.60.01 and 12.60.08

(6) **Lubricate accelerator linkage/pedal fulcrum and check operation**

1. Lubricate accelerator linkage on carburetter(s), using an oil can.
2. Wipe away surplus oil from linkage.
3. Check for roughness in linkage operation.
4. Lubricate accelerator pedal fulcrum, using an oil can.
5. Wipe away surplus oil from pedal fulcrum.

CAUTION: Surplus oil on the pedal fulcrum can cause staining of the carpet.

6. Check carburetter throttle response to initial movement of the accelerator pedal.

   If adjustment is necessary – see 19.20.05

7. Check carburetter throttle position with accelerator pedal fully depressed.

   If adjustment is necessary – See 19.20.05

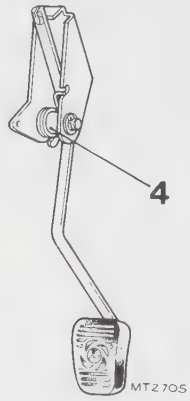

(7) **Check cooling/heating system for leaks and hoses for security and condition**

1. Check for leaks from engine and radiator drain taps/plugs (where fitted).
2. Check for leaks from water hose joints.
3. Check for leaks from water hoses through damage or porosity.
4. Check for leaks from water pump, thermostat housing, radiator and heater unit.
5. Report any leaks found.

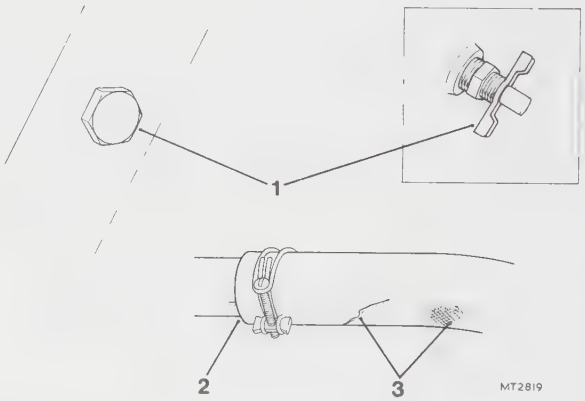

(8) **Check/report oil/fuel/fluid leaks**

1. Check for oil leaks from engine and transmission.
2. Check for fuel leaks from pump, carburetter, pipes, joints and unions.
3. Check for fluid leaks from brake master cylinder pipes, joints and unions.
4. Check for fluid leaks from clutch master cylinder, pipes, joints and unions.
5. Report any leaks found.

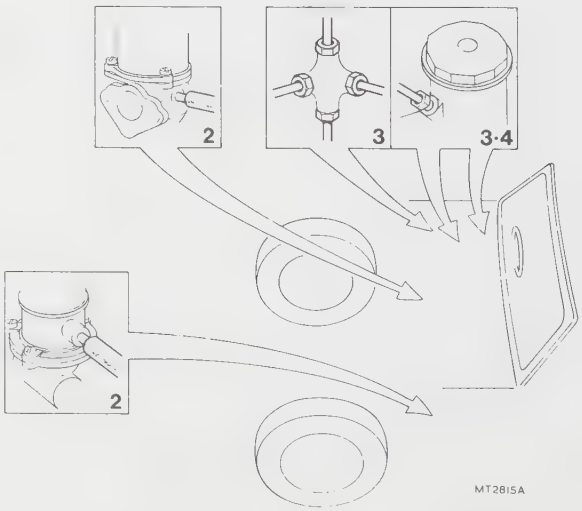

(9) Check/adjust torque of cylinder head nuts/bolts.

1. Remove rocker cover – See 12.29.42.
2. Using the sequence shown, tighten cylinder head nuts to 38 to 46 lbf ft (5.2 to 6.4 kgf m).
3. Check/adjust valve rocker clearances – See 12.29.48.
4. Check rocker cover gasket for damage, and renew if necessary.
5. Refit rocker cover – See 12.29.42.
6. With gears in neutral, handbrake on, start engine and check for leaks from rocker cover gasket.

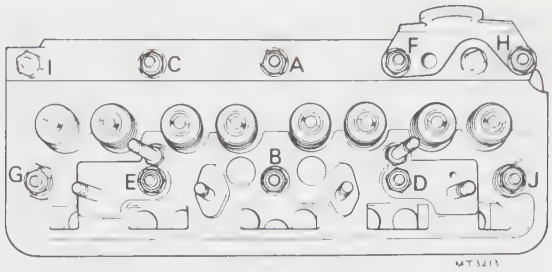

(10) Check driving belts, adjust or renew

1. Check and adjust – See 26.20.01.
2. Renew where belt is visibly
   (a) worn or
   (b) damaged

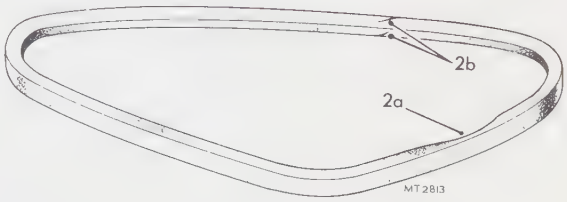

(11) Check security of engine mountings. Check the security of the following engine bolts and mountings, using the torque figures shown in 06.

1. Inlet and exhaust manifolds.
2. Rocker cover.
3. Air cleaner and carburetters.
4. Air pump (where fitted).
5. Sump.
6. Timing cover.
7. E.G.R. valve (where fitted).
8. Engine and gearbox to chassis.
9. Alternator.

(12) Check/adjust carburetter idle settings:

See 19.15.01 or 19.15.02 as applicable.

(13) Top up carburetter piston damper(s)

U.S.A. Markets

1. Remove the two bolts securing the air cleaner to the carburetter.
2. Remove the air cleaner.
3. Unscrew and remove the damper assembly from the top of the carburetter.
4. Fully raise the piston by inserting a finger into the carburetter intake hole. With the piston raised, top up the damper tube with a recommended engine oil, until the oil level is ¼ in (6 mm) below the top of the tube.
5. Release the piston and refit the damper assembly, screwing down the plastic plug.
6. To ensure correct location of the oil retaining cup in the damper tube, again raise and lower the piston.
   NOTE: A certain amount of pressure will be felt when lifting the piston, but it is essential that the piston is lifted to maximum height to ensure correct location of the oil retaining cap.
7. Refit the air cleaner.

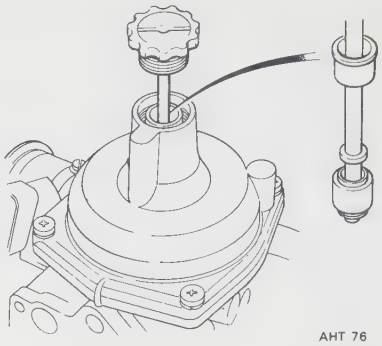

U.K. and European Markets

S.U. Carburetters

1. Unscrew the hexagon plug from the top of the carburetter.
2. Withdraw the plug and damper assembly from the carburetter.
3. Check the dashpot oil level, which if correct will be ½ in (13 mm) above the top of the hollow piston rod.
4. If necessary, add a recommended engine oil using an oil can until the level is correct.
5. Replace the plug and damper assembly.
6. Screw the hexagon plug firmly in position.

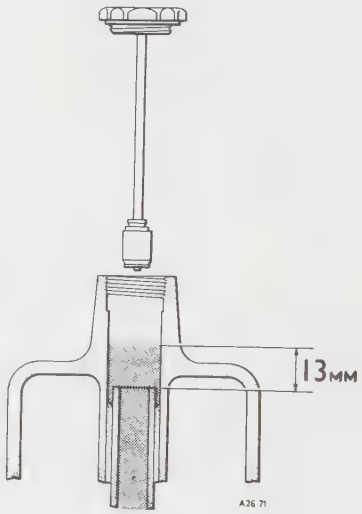

(14)Renew carburetter air cleaner elements

See 19.10.08

(15) Check/adjust deceleration by-pass valve – U.S.A. Markets

See 19.15.01 or 19.15.02 as applicable

(16) Check security of E.G.R. valve operating lines – U.S.A. Markets.

Check E.G.R. valve operating pipe lines for security of push-fit connections at the following units.

a. E.G.R. valve
b. Cut-off valve
c. Tee piece
d. Fuel trap
e. Carburetter.

Renew any pipes that show signs of deterioration.

(17) **Check E.G.R. system – U.S.A. markets**

NOTE: On the completion of each 12,500 miles, this maintenance operation will be indicated by a warning light on the facia.

1. Disconnect the vacuum pipe from the top of the E.G.R. valve.
2. Remove the E.G.R. valve. 17.45.01.
3. Clean the base of the valve with a brush.
4. Use a standard spark plug machine to clean the valve seat and pintle. Insert the valve opening into the machine and lift the diaphragm evenly by using two fingers. Blast the valve for approximately 30 seconds, remove and inspect. If necessary, repeat until all carbon deposits are removed. Use compressed air to remove all traces of carbon-grit from the valve.
5. Examine the E.G.R. ports in the manifold. Light deposits are not detrimental to system function and should not be disturbed. Heavy deposits must be cleared by removing the inlet manifold and cleaning the ports.
   CAUTION: Do not attempt to clean the ports with the manifold in position.
6. Refit the E.G.R. valve. 17.45.01.
7. Reconnect the vacuum pipe to the top of the E.G.R. valve.
8. Check E.G.R. valve operating lines for security of push-fit connections at E.G.R. valve, cut-off valve, tee piece, fuel trap and carburetter. Renew any that show signs of deterioration.
9. Check function of E.G.R. valve as follows:
   Start and run the engine until normal operating temperature is attained. Ensure that the choke control knob is pushed fully in. Open and close the throttle several times and observe or feel the E.G.R. valve which should open and close with the changes in engine speed. The valve should close instantly when the throttle is closed.
10. If the operation of the valve does not appear completely satisfactory, check the valve by connecting the vacuum pipe of a distributor vacuum test unit to the valve. Ensure that the valve is actuated, held, and that there is no leak of vacuum, otherwise, fit a new E.G.R. valve complete.
11. Reset the E.G.R. Service Interval indicator using the special key.

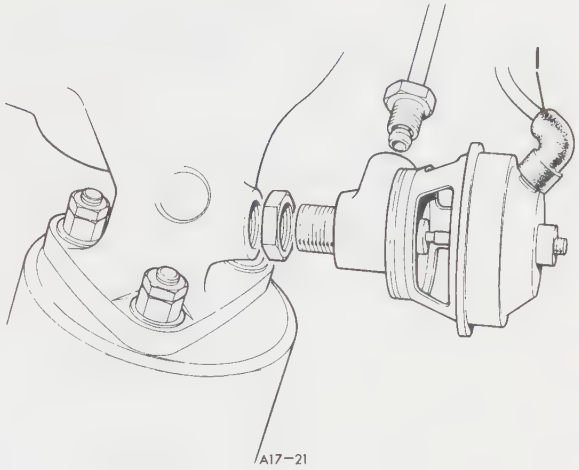

(18) **Check/adjust choke settings (Manual chokes)**

See operation 19.15.02

(19) **Check crankcase breathing and evaporative loss system hoses for security, visually check the following hoses for security and rectify as necessary.**

1. Crankcase purge line.
2. Carburetter float chamber vent pipe.
3. Adsorption canister purge line.
4. Fuel tank vent pipe.
5. Manifold vacuum line.

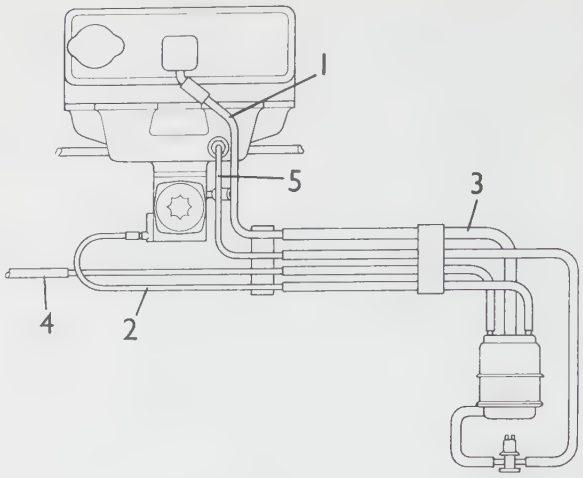

A17-25

(20) **Check crankcase breathing and evaporative loss systems; check hoses/pipes and restrictors for blockage, security and condition**

1. Inspect all hoses for condition and renew any hoses that show signs of deterioration, including slackness or cracking.
2. Completely disconnect the crankcase purge line and the adsorption canister purge line, and using a low pressure air supply, blow through these hoses to check for blockage. Investigate and clear any blockage, paying particular attention to the restrictors.
3. Refit the purge lines, ensuring that all connections are secure and tight. Renew any doubtful hoses.

(21) **Renew adsorption canister**

See 17.15.13

(22) **Check/adjust valve clearances**

See 12.29.48

(23) **Clean fuel pump filter**

See 19.45.05

IGNITION

(24) Clean/adjust spark plugs – for each spark plug in turn

1. Remove the ignition high tension lead from the plug.
2. Unscrew the plug from the engine using a special plug spanner or a box type spanner.
3. Wipe clean the ceramic body of the plug.
4. Visually check the plug body for cracks, and renew the plug if any cracks are present.
5. Unscrew the end terminal cap from the plug.
6. Clean the plug terminal threads with a wire brush.
7. Clean the cap threads using a low pressure air line.
8. Screw the end terminal cap firmly into position on the plug.
9. Clean the electrode area and the plug threads with a wire brush or sand blasting machine.
10. Visually check the electrode surfaces for damage and renew the plug if there are any signs of damage.
11. Check the electrode gap, which if correct will just allow a 0.025 in (0.64 mm) feeler gauge to slide slowly between the electrodes under light pressure.

    If adjustment is necessary
12. (a) using a suitable tool, carefully move the side electrode
    (b) check the gap. Repeat this procedure until the gap is correct.
13. Refit the plug to the engine and tighten to 20 lbf ft (2.8 kgf m).
14. Refit the high tension lead to the plug.

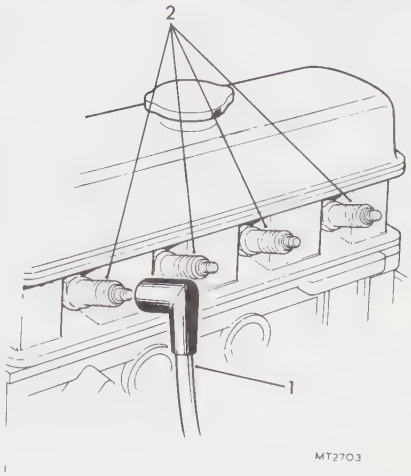

(25) Renew spark plugs – for each plug in turn

1. Remove the ignition high tension lead from the plug.
2. Unscrew the plug from the engine using a special plug spanner or a suitable box spanner.
3. Discard the plug.
4. Visually check the new plug for damage to the body and electrodes; discard the plug if there are any signs of damage.
5. Check the electrode gap on the new plug, which when correct will just allow a 0.025in (0.64 mm) feeler gauge to slide slowly between the electrodes under light pressure.

   If adjustment is necessary, using a suitable tool carefully move the side electrode. Re-check the gap and repeat this procedure until the gap is correct.
6. Fit the new plug to the engine.
7. Tighten the plug to 20 lbf ft (2.8 kgf m).
8. Refit the high tension lead to the plug.

(26) Check distributor points; adjust or renew – (U.K. and European markets)

See 86.35.14

(27) **Lubricate distributor**

See 86.35.18

(28) **Check/adjust ignition timing using electronic equipment – U.S.A. Markets**

See 86.35.15.

(29) **Check/adjust ignition timing and distributor characteristics using electronic equipment – U.K. and European Markets. See 86.35.00**

(30) **Check security of distributor vacuum unit line and operation of vacuum unit – U.S.A. Markets**

1. Check security of distributor retard operating line.
2. Start the engine and warm to normal running temperature.
3. When the engine is idling steadily, disconnect the vacuum retard pipe from the distributor.
4. A noticeable rise in engine speed (approximately 500 rev/min) should be apparent if the vacuum retard system is functioning, otherwise overhaul or renew the distributor.
5. When satisfied that the vacuum unit is operating correctly, reconnect the vacuum retard pipe, ensuring a secure connection.

(31) **Check ignition wiring for fraying, chafing and deterioration – U.S.A. Markets**

Low tension circuit

1. Check the connections of the ballast resistor wire, drive resistor, distributor, coil and ignition switch.
2. Check the ignition coil connections.
3. Check the wiring between the coil and the distributor.
4. Check the distributor cap and check the internal wiring.
5. Remove the distributor cap and check the internal wiring.
6. Check the distributor internal connections.
7. Refit the distributor cap.

(32) Check operation of distributor vacuum unit

See No. 30

(33) Clean distributor cap, check for cracks and tracking

1. Remove the distributor cap, using a nap free cloth, wipe the distributor cap and rotor arm.
2. Inspect the cap and rotor, internally and externally, for cracks and any trace of tracking.
3. Refit the rotor arm and cap if serviceable, otherwise fit new components as necessary.

(34) Check coil performance on an Oscilloscope

1. Using proprietary testing equipment, in accordance with the equipment instructions, check the resistance of the ignition coil primary winding which must be between 1.2 and 1.5 ohms, if necessary fit a new coil.

TRANSMISSION

(35) Check for oil leaks

See maintenance operation No. 8

(36) Check/top up gearbox oil

With vehicle standing level.

1. Wipe clean the gearbox filler plug and surrounding area.
2. Remove the filler plug.
3. Add new oil of the recommended grade, via the filler plug hole, until the oil level reaches the bottom of the filler plug hole.
4. Allow surplus oil to drain.
5. Replace the filler plug.
6. Tighten the plug to 25 lbf ft (3 5 kgf m).
7. Wipe away the surplus oil.

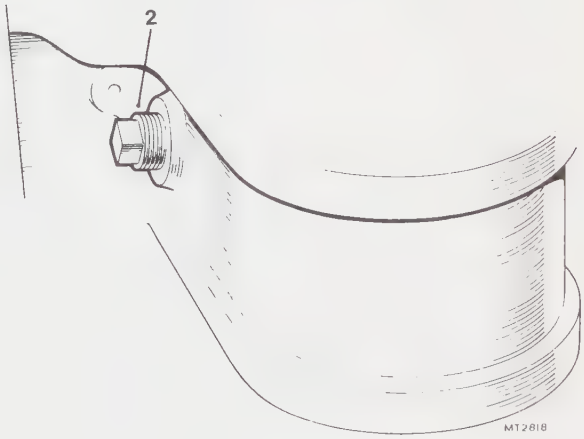

(37) **Check/top up final drive/rear axle oil**

With vehicle standing level

1. Wipe clean the final drive unit filler plug and surrounding area.
2. Remove the filler plug.
3. Add new oil of the recommended grade, via the filler plug hole, until the oil level reaches the bottom of the filler plug hole.
4. Allow surplus oil to drain.
5. Replace the filler plug.
6. Tighten the plug to 25 lbf ft (3.5 kgf m).
7. Wipe away surplus oil.

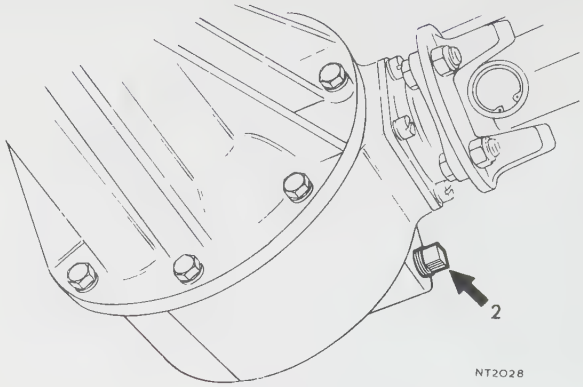

(38) **Check tightness of propeller shaft coupling bolts**

1. Check the security of the propeller shaft coupling bolts which should be 34 lbf ft (4.7 kgf m).

(39) **Check tightness of drive shaft coupling bolts**

2. Check the security of the half shaft to the final drive unit coupling bolts, which should be 46 lbf ft (6.4 kgf m).

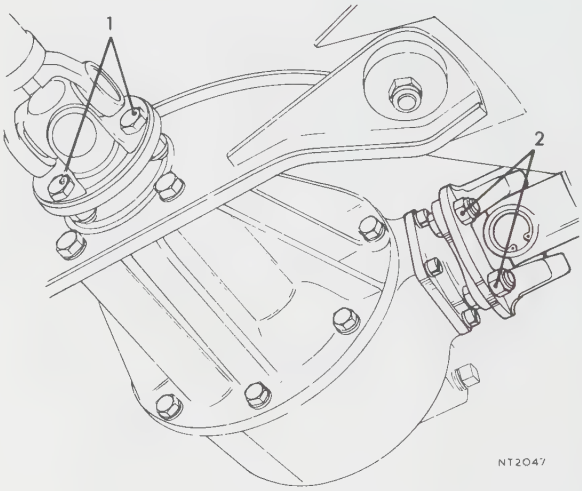

(40) **Check clutch pipes for leaks and chafing**

Check visually

1. Clutch pipes, hoses and unions for chafing, leaks and corrosion.
2. Report any defects found.

(41) **Check/top up clutch fluid reservoir**

Top up when required with new fluid of the type recommended – see 09 –

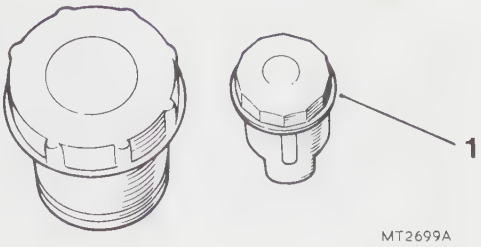

(42) **Lubricate clutch pedal pivots**

1. Using an oil can lubricate the clutch pedal pivot.
2. Wipe away the surplus oil to prevent staining the carpet.

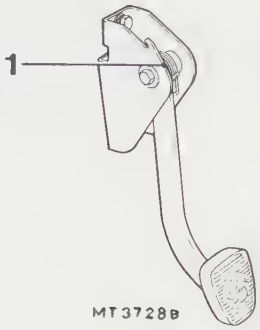

STEERING AND SUSPENSION

(43) **Check for oil/fluid leaks**

See maintenance operation number 8

(44) **Lubricate steering rack and pinion**

1. Wipe clean the plug and surrounding area.
2. Remove the plug.
3. Fit a suitable grease nipple in place of the plug.
4. Apply a grease gun, filled with the correct grade of grease – See 09 – to the grease nipple and give 5 strokes only.

   CAUTION: Overgreasing can cause damage to the protective gaiters.
5. Remove the grease nipple.
6. Refit the plug.
7. Wipe away any surplus grease.

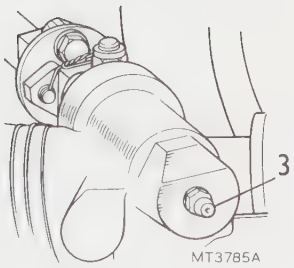

(45) **Check condition and security of steering unit joints and gaiters**

1. Check security of steering unit mounting and steering joints using page 06 as a guide.
2. Check steering for backlash.
3. Check condition of steering gaiters.
4. Report any defects found.

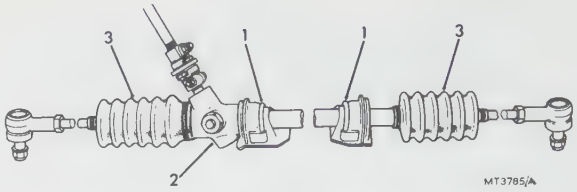

(46) **Check security of suspension fixings**

Refer to Division 06 for torque settings

(47) **Adjust front hub bearing end float**

1. Remove the road wheel.
2. Check the hub for end float – (0.003″ – 0.005″).
3. If adjustment is required, remove the hub cap and split pin.
4. Tighten the slotted nut as required to eliminate the end float. A torque of 5 lbf ft (0.691 kgf m) must not be exceeded or damage may be caused to the bearings and bearing tracks. Back off one flat and insert a new split pin.
5. Lock the split pin, clean the hub cap and refit.
6. Fit the road wheel.

(48) **Check/adjust front (and rear) wheel alignment**

See 57.65.01

(49) **Lubricate steering swivels**

WARNING: Only OIL must be used on the lower steering swivels. DO NOT use grease.

1. Wipe clean the plug and surrounding area.
2. Remove the plug.
3. Fit a suitable grease nipple.
4. Using a grease gun, charged with a recommended lubricant, lubricate the lower steering swivel.
5. Remove the grease nipple.
6. Refit the plug.
7. Wipe away surplus oil.

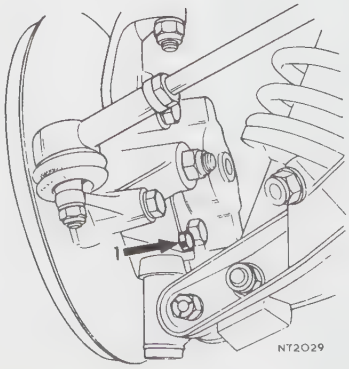

(50) **Lubricate rear hubs**

1. Wipe clean the plug and surrounding area.
2. Remove the plug.
3. Fit a suitable grease nipple to the plug hole.
4. Apply a grease gun to the nipple and stroke until the grease exudes from the bearing.
5. Remove the grease nipple.
6. Refit the plug.
7. Wipe away any surplus grease.

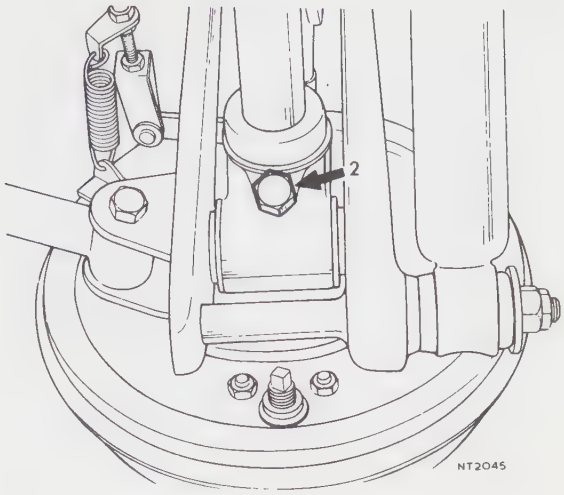

BRAKES

(51) **Inspect brake pads for wear and discs for condition**

1. Jack up the front of the car and support the body on stands.
2. Remove the road wheel.
3. Remove the disc brake pads, operation 70.40.22.
   CAUTION: Do not depress the brake pedal while the pads are removed.
4. Report on the pad condition, if the friction lining has been reduced to 0.125 in (3 mm) or if there is not sufficient material to provide a thickness of 0.125 in (3 mm) at the completion of a further 3,000 miles (5,000 km) motoring.
5. Check the brake disc for excessive scoring and run-out and report if this is present.
6. Refit the pads, road wheels and lower the car.
7. Firmly depress the footbrake several times to correctly locate the friction pads.

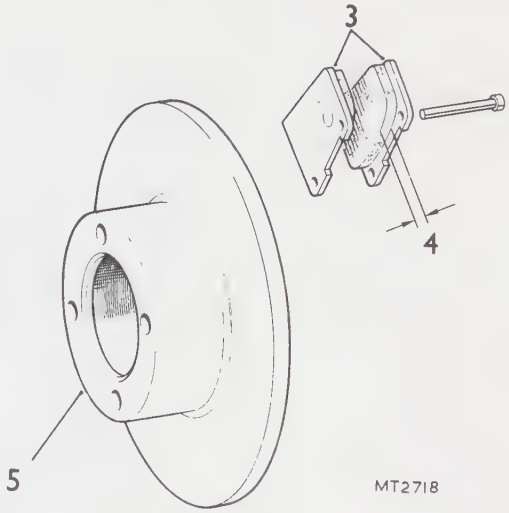

(52) **Inspect brake linings/pads for wear and drums/discs for condition**

1. Jack up the rear of the car and support the body on stands.
2. Remove the car road wheels.
3. Remove the rear brake drum operation. 70.10.03.
4. Check the brake linings for wear, report if they are excessively worn, damaged, or contaminated by oil or grease. Remove any surplus oil or grease and dust linings and drum.
5. Replace the brake drum. 70.10.03.
6. Fit the rear road wheels and lower the car.
7. See maintenance No. 51 for front brake pads and disc inspection.

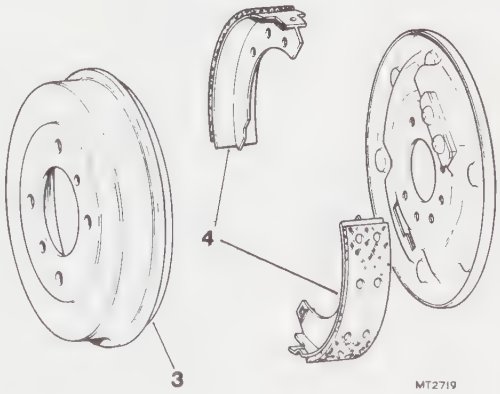

(53) **Check/top up brake fluid reservoir**

1. Wipe clean the reservoir cap and surrounding area.
2. Remove the reservoir cap.
3. Check the fluid level against the mark on the side of the reservoir.
4. If necessary, add fluid to bring the level up to the mark on the side of the reservoir.
   WARNING: Use only new fluid of the correct specification. DO NOT use fluid of an unknown origin, or fluid that has been exposed to the atmosphere or fluid that has been discharged during bleeding operations.
5. Replace the reservoir cap.
6. Remove any spilled fluid with a clean cloth.
   CAUTION: Paintwork can be damaged by direct contact with brake fluid.

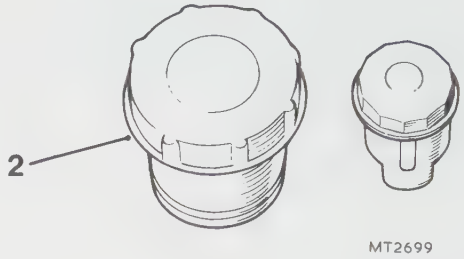

(54) **Check footbrake operations/adjust to manufacturer's instructions (Manual)**

1. With the handbrake off, check the brake pedal for spongy operation and excessive travel.
2. If the pedal has spongy operation, bleed and adjust the brakes – See 70.25.01.
3. If the brake pedal travel is excessive, adjust brakes – See 70.25.03.

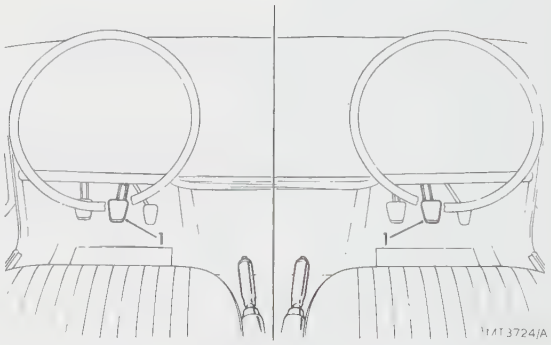

(55) **Check handbrake operation, adjust to manufacturer's instructions**

1. With the foot clear of the brake pedal, check the handbrake for excessive travel.
2. If the handbrake travel is excessive, adjust the handbrake – See 70.35.10.

(56) **Lubricate brake pedal pivots**

1. Using an oil can lubricate the brake pedal pivot.
2. Wipe away the surplus oil to prevent staining the carpet.

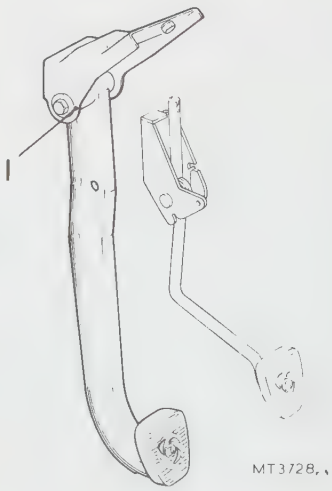

(57) **Lubricate handbrake mechanical linkage and cable guides**

1. Lubricate the handbrake pivot.
2. Smear grease around the handbrake lever cable connection, working it well into the clevis.
3. Smear grease around the brake drum cable connections, working it well into the clevis pin.
4. Grease the exposed sections of the inner cable to combat corrosion.

(58) **Check visually hydraulic pipes and unions for chafing, leaks and corrosion**

Report any defects found

(59) **Renew hydraulic brake fluid**

Completely evacuate the brake hydraulic system via the wheel unit bleed screws, then replenish with fresh fluid of the correct specification, See 09 – from a sealed container.

ELECTRICAL

(60) **Check operation of original equipment, i.e. interior and exterior lamps, horns, wipers and warning indicators**

In sequence, check operation of:

1. Side, tail and headlamps (including dip/main beam and 'Flash' controls).
2. Instrument panel illuminations.
3. Interior light.
4. Horn(s).
5. Auxiliary lights.

With ignition circuits energised, check operation of:

6. All warning lights (including 'Hazard' warning lights if fitted).
7. Fuel level indicator.
8. Heater blower motor.
9. Windscreen washers.
10. Windscreen wipers.
11. Direction indicators.
12. Brake lights.
13. Reversing lights.
14. Start engine and note that oil pressure warning light has extinguished

Check operation of:

15. Charging system warning light in relation to engine speed.
16. Temperature indicator.
17. Radio (if fitted).
18. Switch off engine and return ignition switch to the auxiliary position, then re-check the function of any fitted accessories, e.g. a radio, that are supplied with power from this switch position.
19. Report any defects found.

(61) **Check/top up battery electrolyte**

NOTE: Alternative procedures are given for each of the two types of battery that may be fitted.

1. Lift and tilt the battery cover.
2. Check electrolyte level, which if correct should just cover the separators.

If topping up is necessary:

3. ADD DISTILLED WATER until the filler tubes are full and the trough is just covered.
4. Replace the battery cover.

Alternatively:

1. Remove the battery filler plugs.
2. Check electrolyte level, which if correct should just cover the separators.

If topping up is necessary:

3. ADD DISTILLED WATER until the separators are just covered. DO NOT OVERFILL.
4. Replace the filler plugs.
   CAUTION: The paintwork can be damaged by direct contact with the base of the filler plugs.

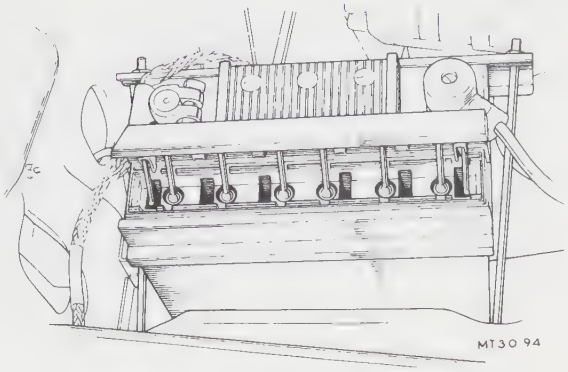

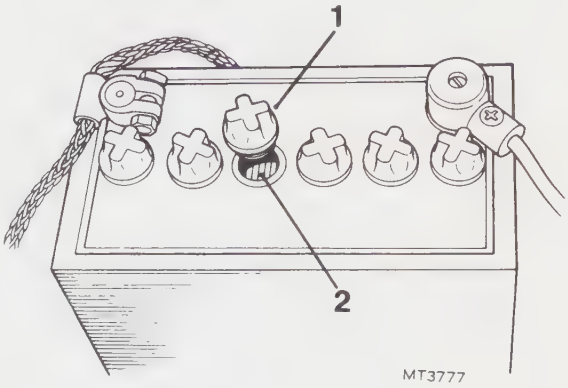

(62) **Clean and grease the battery connections with the battery in location**

1. Check the battery and surrounding area for corrosion from battery chemicals.
2. Clean off any corrosion found.
3. Check visually for cracks in the battery case.
4. Report on any case cracks found.
5. Check security of terminal connections.
6. Check/adjust headlamp alignment – See 86.40.18.

(63) **Check/adjust headlamp alignment**

See 86.40.18.

(64) **Check, if necessary renew wiper blades**

1. Examine each wiper blade in turn for damage.
2. With the wiper blades in position and the windscreen wet, operate the wiper motor.
3. Check the wiper blade operation for smearing and adequate removal of dirt.
4. Stop the wiper motor.
5. If the checks in procedures 1 and 3 are not satisfactory replace the wiper blades as necessary – See 84.15.05.

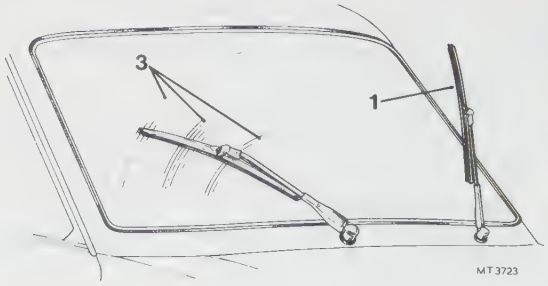

(65) **Check output of charging system**

FUEL AND EXHAUST PIPES

(66) **Check exhaust system for leaks and security**

1. Check the security of the exhaust pipe to the manifold nuts, tighten to the correct torque, 14 lbf ft (1.9 kgf m).
2. Check the security of the exhaust pipe joint clips.
3. Check the security of the exhaust system (and where applicable the catalytic converter) mounting bolts.
4. Use a second operator, run the engine at fast idle speed.
5. Check the exhaust system joints for leaks.
6. Check the exhaust pipes for leaks arising from damage or deterioration.
7. Check the exhaust silencer for leaks arising from damage or deterioration.
8. Stop the engine.
9. Report any defects found.

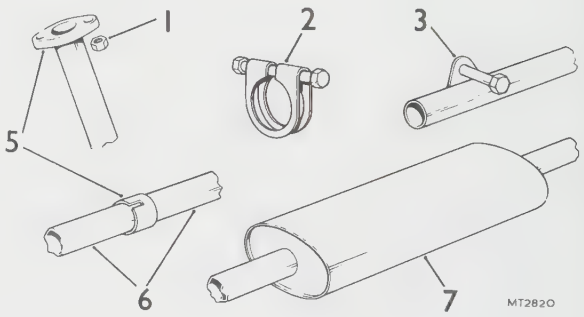

(67) **Check fuel system for leaks, pipes and unions for chafing and corrosion**

Report any defects.

(68) **Renew catalytic converter**

See 17.50.01

Reset the converter service interval indicator using the special key.

(69) **Check condition of fuel filler cap seal**

1. Make a visual check of the seal for the fuel tank filler cap.
2. Renew the seal if its condition is doubtful.

(70) **Renew fuel line filter**

See 19.25.02

WHEELS AND TYRES

(71) **Check/adjust tyre pressures including spare wheel**

Refer to Division 04 for pressure settings

WARNING: It can be dangerous:

(a) To use a car fitted with tyres in a damaged condition.

(b) To mix cross ply tyres and radial ply tyres on the same axle.

(c) To use a tyre that has a tread depth of less than 0.039 in (1.0 mm) over three-quarters of the tread width for the centre circumference of the tyre.

(d) To use a car with the tyres inflated to a pressure that is not suitable for the use to which the vehicle is put.

If the tyres do not conform with legal requirements report to the owner.

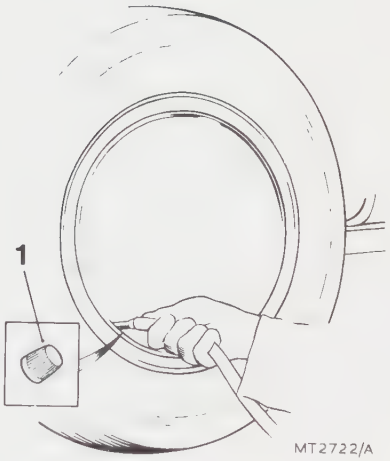

(72) **Check that tyres comply with manufacturer's specifications**

See Division 04

Report any deviations that may influence the car's performance or the accuracy of the speedometer.

(73) **Check tightness of road wheel fastenings**

Refer to Division 06 for the torque settings.

(74) **Check tyres for external cuts in the tyre fabric, exposure of ply or cord structure, lumps or bulges**

(75) **Check tyres for tread depth, visually for external cuts in tyre fabric, exposure of ply or cord structure, lumps and bulges**

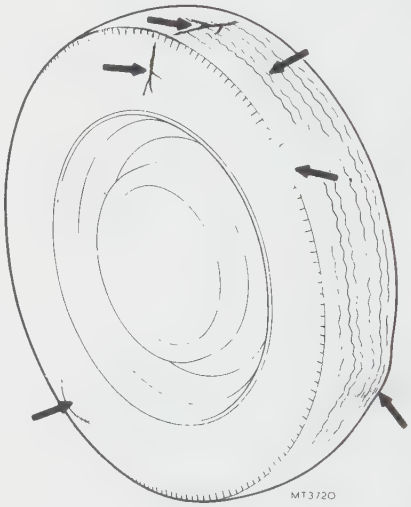

BODY

(76) **Lubricate all locks and hinges (not steering lock); using an oil can sparingly, lubricate the items as detailed**

Wipe away any surplus oil to avoid staining paintwork or interior hinges.

(77) **Check condition and security of seats and seat belts**

(78) **Check rear view mirror for cracks and crazing**

(79) **Check operation of all door, bonnet and boot locks**

(80) **Check operation of seat belt warning system**

(81) **Check operation of window controls**

(82) **Check tightness of subframe/body mountings**
Refer to Division 06 for torque settings

(83) **Check operation of seat belt inertia reel mechanism**

(84) **Ensure cleanliness of controls, door handles and steering wheel**

ROAD TEST

(85) **Road/Roller test and check function of all instrumentation**

(86) **Report additional work required**

ADDITIONAL PREVENTIVE MAINTENANCE

In addition to the foregoing routine maintenance operations, the following inspections and action must be carried out at the specific intervals.

At 18,000 miles or 18 months whichever is the sooner – U.K. and Europe.
At 19,000 miles or 19 months whichever is the sooner – U.S.A. Markets.

Renew hydraulic brake fluid
Completely evacuate the brake hydraulic system via the wheel unit bleed screws, then replenish with fresh fluid of the correct grade, See 09 – from a sealed container.

At 36,000 miles or 3 years whichever is the sooner – U.K. and Europe
At 37,500 miles or 3 years whichever is the sooner – U.S.A. Market

Examine brake and clutch hydraulic systems
All fluid seals in the hydraulic system and all flexible hoses should be examined and renewed if necessary. At the same time the working surface of the pistons and of the bores of the master cylinder, wheel cylinders and other slave cylinders should be examined and new parts fitted where necessary.

ENGINE OPERATIONS

Cam followers – set – remove and refit 12.29.57

Camshaft – remove and refit 12.13.01

Connecting rod bearing
- – set – remove and refit 12.17.16
- – one – remove and refit 12.17.17
- – extra each – remove and refit 12.17.18

Connecting rods and pistons
- – remove and refit 12.17.01
- – overhaul 12.17.10

Crankcase front sealing block – remove and refit 12.25.11

Crankshaft – remove and refit 12.21.33
- – end float – check and adjust 12.21.26
- – pulley – remove and refit 12.21.01
- – rear oil seal – remove and refit 12.21.20
- – spigot bush – remove and refit 12.21.45

Cylinder block drain plug – remove and refit 12.25.07
- – block front mounting plate gasket – remove and refit 12.25.10

Cylinder head
- –overhaul 12.29.18
- – remove and refit 12.29.10
- – gasket – remove and refit 12.29.01
- – nuts – tighten 12.29.27

Cylinder pressures – check 12.25.01

Decarbonize, reface all valves and seats, grind-in valves, tune engine 12.29.21

Distributor drive shaft – remove and refit 12.10.22

Engine assembly
- – remove and refit 12.41.01
- – strip and rebuild 12.41.05

Engine rear adaptor plate – remove and refit 12.53.03

Engine and gearbox assembly – remove and refit 12.37.01

Engine mounting
- – front L.H. – remove and refit 12.45.01
- – front R.H. – remove and refit 12.45.03
- – front set – remove and refit 12.45.04
- – rear L.H. – remove and refit 12.45.07
- – rear R.H. – remove and refit 12.45.09
- – set – remove and refit 12.45.10

Engine restraint cable – remove and refit 12.45.19

Exhaust valve seats – extra each – remove and refit 12.29.80
- – remove and refit 12.29.77

Flywheel – remove and refit 12.53.07

ENGINE OPERATIONS – continued

Gudgeon pin bush – each – remove and refit 12.17.13

Inlet valve seat – extra each – remove and refit 12.29.79
– remove and refit 12.29.76

Main bearings
– centre and rear – remove and refit 12.21.42
– front – remove and refit 12.21.41
– set – remove and refit 12.21.39

Oil filter assembly – remove and refit 12.60.01
– pick-up strainer – remove and refit 12.60.20
– pressure relief valve – remove and refit 12.60.56
– sump – remove and refit 12.60.44

Oil pump
– overhaul 12.60.32
– remove and refit 12.60.26

Piston and/or rings
– engine set – remove and refit 12.17.03
– extra each – remove and refit 12.17.06
– one – remove and refit 12.17.04

Push rods – set – remove and refit 12.29.59

Rocker adjusting screws – set – remove and refit 12.29.56
– cover – remove and refit 12.29.42
– shaft assembly – overhaul 12.29.55
– shaft – remove and refit 12.29.54

Starter ring gear – remove and refit 12.53.19

Timing chain – remove and refit 12.65.14
– chain and sprockets – remove and refit 12.65.12
– chain tensioner – remove and refit 12.65.28
– cover oil seal – remove and refit 12.65.05
– chain cover – remove and refit 12.65.01

Valve clearance – check and adjust 12.29.48

Valve guides
– exhaust – extra each – remove and refit 12.29.73
– exhaust – remove and refit 12.29.71
– inlet – extra each – remove and refit 12.29.72
– inlet – remove and refit 12.29.70

ENGINE OPERATIONS – continued

Valve timing – check and adjust 12.65.08

Valves
– exhaust – remove and refit 12.29.64
– inlet and exhaust – remove and refit 12.29.62
– inlet – remove and refit 12.29.63

Valve springs
– exhaust – remove and refit 12.29.67
– exhaust – extra each – remove and refit 12.29.69
– inlet – remove and refit 12.29.66
– inlet – extra each – remove and refit 12.29.68
– inlet and exhaust – remove and refit 12.29.65

DISTRIBUTOR DRIVE SHAFT AND GEAR

– Remove and refit 12.10.22

[**NOTE:** To prevent abrasive dirt from entering the engine, thoroughly clean the pedestal and the surrounding part of the cylinder block before you remove the pedestal.]

Removing

1. Remove the distributor. 86.35.20.
2. Remove the two nuts and washers securing the pedestal to the cylinder block studs.
3. Lift off the diverter and relief valve bracket and the two distance washers and move to one side (U.S.A. Catalytic and non Catalytic Converter specifications only), and remove nut securing dipstick tube to the bracket and carefully release the tube from the bracket. (U.S.A. Converter specification.)
4. Remove the pedestal and gasket.
5. Lift out the drive shaft and gear.

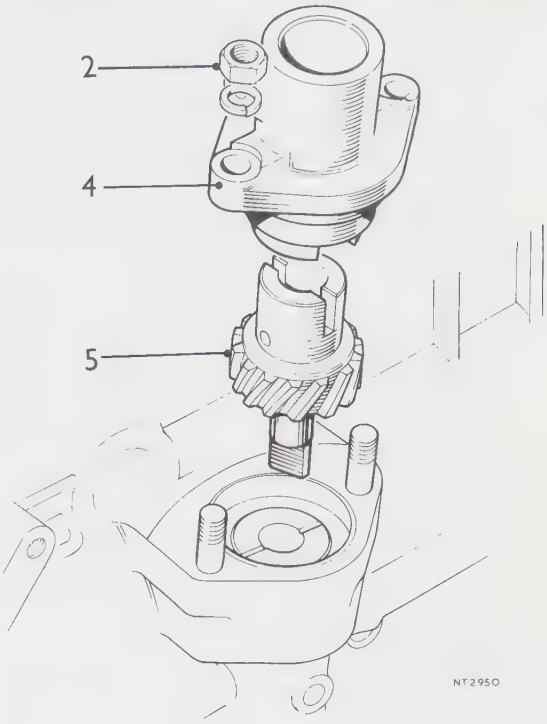

Refitting

NOTE: An end float of 0.005 in ± 0.002 in (0.13 mm ± 0.05 mm) must exist between the end of the distributor pedestal and the drive gear. The end float is controlled by the selective use of gaskets between the cylinder block and pedestal. To measure the end float adopt the following procedure.

6. Measure and note the thickness of a plain washer 0.5 in (12.7 mm) i. dia. and place it over the drive shaft below the gear.
7. Insert the shaft assembly and washer into position in the bush, ensuring that the oil pump drive is mated with the shaft.

   NOTE: Use a screwdriver to turn the oil pump drive; try the drive gear in a different position in order to be sure that it is down correctly.

8. Fit the distributor pedestal into position without gasket(s).

continued

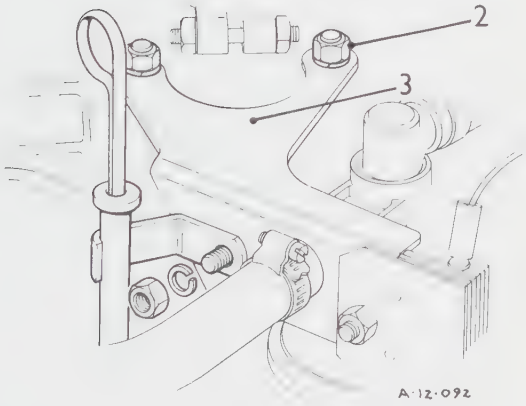

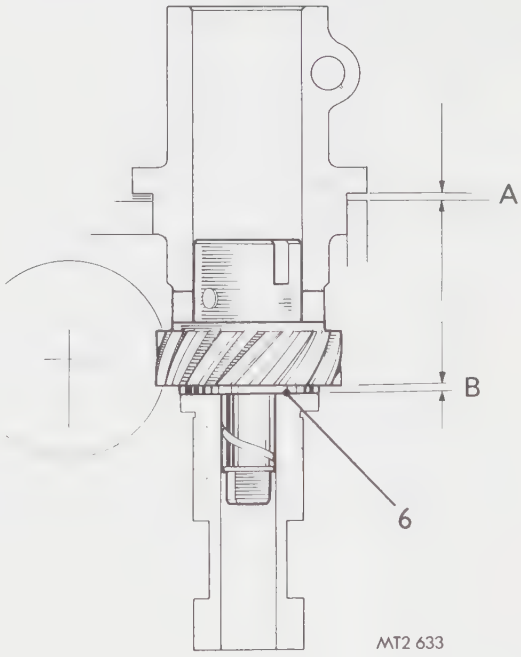

9. Measure the gap between the pedestal and cylinder block (A) and subtract from (B) the thickness of the washer.
   If the gap 'A' is smaller than washer 'B' the figure obtained will be end-float. If the gap 'A' is larger than 'B' a pre-load condition will exist. Adjustment to give the correct end-float of 0.005 in (0.13 mm) should be calculated as follows, a tolerance of ± 0.002 in (0.05 mm) being permissible.

Example 1	in	mm
Thickness of washer (B)	0.100	2.54
Pedestal/cylinder block gap (A)	0.098	2.49
= gear end-float of	+0.002	+0.05
and gasket of	0.003	0.08
for correct end-float	0.005	0.13

Example 2	in	mm
Thickness of washer (B)	0.100	2.54
Pedestal/cylinder block gap (A)	0.110	2.79
= gear load of	–0.010	–0.25
add gasket of	0.015	0.38
for correct end-float of	0.005	0.13

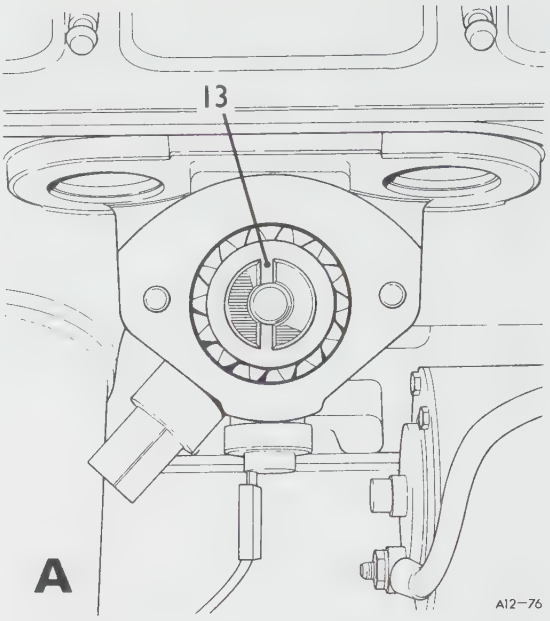

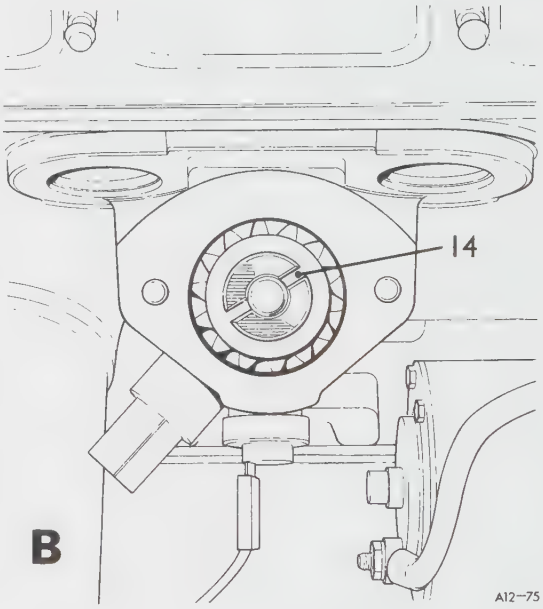

10. Remove the pedestal, shaft assembly and washer.
11. Turn the crankshaft to bring No. 1 piston to T.D.C. on compression stroke.
12. Lower the drive gear into the bush, allowing it to turn as it meshes with the camshaft gear and ensuring that it engages with the oil pump drive dog.
13. Illustration 'A' shows the correct position of the off-set slot for the U.S.A. Catalytic and non Catalytic specification.
14. Illustration 'B' shows the correct position of the off-set slot for the U.K. and European specification.
15. Fit the pedestal and selected gasket(s).
16. Fit the distance washers and diverter and relief valve bracket (U.S.A. Catalytic and non Catalytic Converter specification) and dipstick tube (Converter specification only).
17. Fit and tighten the nuts and washers.
18. Fit the distributor. 86.35.20.

[**NOTE:** To prevent undue wear when the engine is first started, lightly lubricate the gear with motor oil during installation.]

DATA

Drive gear end-float . . . . . 0.003 to 0.007 in (0.08 to 0.18 mm)

CAMSHAFT

– Remove and refit 12.13.01

Removing

1. Disconnect the battery.
2. Drain the cooling system.
3. Remove the radiator. 26.40.01.
4. Remove the cylinder head. 12.29.01.
5. Remove the water pump housing complete with fan assembly.
6. Remove the alternator.
7. Remove the air pump (USA Catalytic and non Catalytic converter specification). 17.25.07.
8. Remove the crankshaft pulley. 12.21.01.
9. Remove the timing cover. 12.65.01.
10. Remove the timing chain and sprockets. 12.65.12.
11. Remove the two bolts securing the camshaft keeper plate.
12. Withdraw the keeper plate.
13. Remove the cam followers, identifying for reassembly.
14. Withdraw the distributor drive shaft and gear. 12.10.22.
15. Remove the fuel pump. 19.45.08.
16. Carefully withdraw the camshaft.

Refitting

17. Lubricate the camshaft bearing journals, and carefully insert the camshaft into the cylinder block.
18. Locate the keeper plate with the two bolts and washers.
19. Check the camshaft end float – see data – by pulling the camshaft out against the keeper plate and inserting a feeler gauge between the camshaft and keeper plate. Reduce end float by renewing the keeper plate.
20. Fit the timing chain and sprockets. 12.65.12.
21. Fit the timing cover.
22. Fit the crankshaft pulley.
23. Fit the distributor drive shaft and gear. 12.10.22.
24. Fit the fuel pump.
25. Insert the cam followers in their respective bores.
26. Fit the cylinder head. 12.29.01.
27. Fit the water pump housing, complete with water pump and fan assembly.
28. Fit the air pump (USA Catalytic and non Catalytic converter specification). 17.25.07.
29. Fit the alternator and adjust the drive belt tension.
30. Fit the radiator. 26.40.01.
31. Fill the cooling system. 26.10.01.
32. Connect the battery.

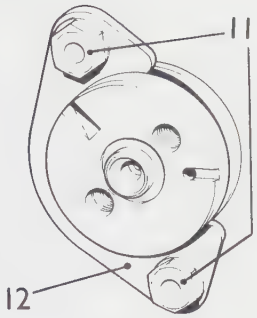

MT2225

[**NOTE:** Used cam followers should never be interchanged. The best way to identify them for reassembly is to wipe dry each follower as you remove it. Then use waterproof ink or a waterproof felt-tipped marker to write an identification number on the follower. During reassembly, lightly lubricate the cam followers with assembly lubricant (available from automotive supply stores) or with a thin coat of multipurpose grease. Doing this will prevent undue cam lobe and cam follower wear when the engine is first started.]

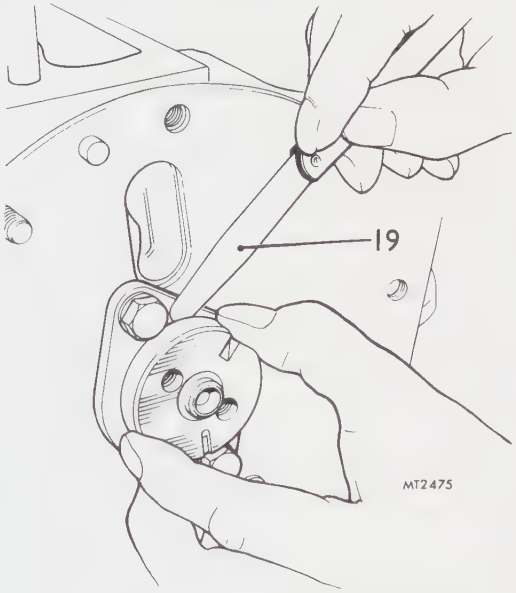

MT2475

DATA

End-float	0.004 – 0.008 in (0.110 – 0.216 mm)
End journal diameter	1.9659 – 1.9664 in (49.93 – 49.95 mm)
Intermediate journal diameter	1.9649 – 1.9654 in (49.91 – 49.92 mm)

12.13.01

CONNECTING RODS AND PISTONS

– Remove and refit 12.17.01

Special tool: 38U3

Removing

1. Isolate the battery.
2. Place the car on a ramp or over a pit.
3. Remove the cylinder head. 12.29.10.
4. Remove the oil sump. 12.60.44.
5. Remove the oil pick-up strainer. 12.60.20, 2 to 4.
6. Turn the crankshaft to bring Nos. 1 and 4 connecting rod bolts to an accessible position.
7. Check the identifying marks on the connecting rods and bearing caps. Mark if necessary.
8. Remove the connecting rod bolts.
9. Withdraw the bearing caps and lower half bearing shells.
10. Push the connecting rods and pistons upwards and carefully withdraw, identifying for reassembly.
11. Marry-up the top and bottom bearing shells and caps with their respective connecting rods and piston assemblies.
12. Repeat instructions 6 to 11 on Nos. 2 and 3 bearings.

continued

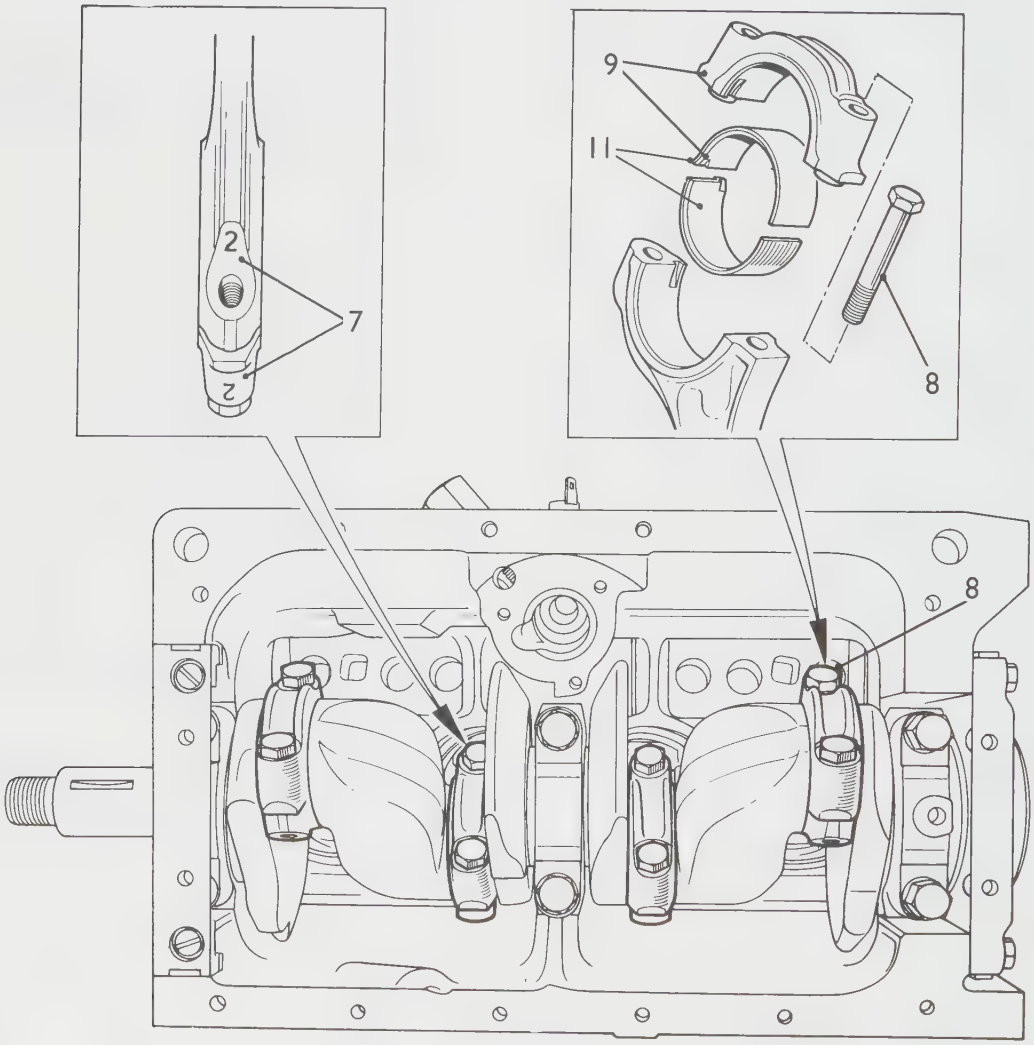

PT2 451

Refitting

13. Position Nos. 1 and 4 crankpins at B.D.C. and lubricate them with clean engine oil.
14. Smear the pistons and cylinder bores with clean engine oil.
15. Carefully insert the connecting rods and pistons into the bores, ensuring that the arrow on the piston crown is pointing to the front of the engine.
16. Ensure that the open face of the big-end bearing is towards the non thrust side of the cylinder bore.
17. Stagger the piston ring gaps, avoiding a gap on the thrust side of the piston.
18. Using a piston ring compressor, gently push the pistons into the bore.
19. Fit the upper bearing shells to the connecting rod big-ends and pull the connecting rods onto the crankpins.
20. Check that the connecting rod hollow dowels are correctly positioned.
21. Fit the bearing shells to the bearing caps and fit to the connecting rods, securing with new bolts and tightening evenly to the correct torque, see Section 06.
22. Repeat instructions 13 to 21 on Nos. 2 and 3 cylinders.
23. Reverse instructions 1 to 5.
24. Replenish the sump with the correct grade of engine oil.

[**NOTE**: Lubricate the pistons, the piston rings, and the cylinders with engine oil only. Other lubricants may interfere with the proper seating of new piston rings. If the engine is to be stored for some time following repairs – or if you are installing new bearing shells – it is advisable to use assembly lubricant (available from automotive supply stores) or a light coating of multi-purpose grease on the crankpins rather than ordinary motor oil.]

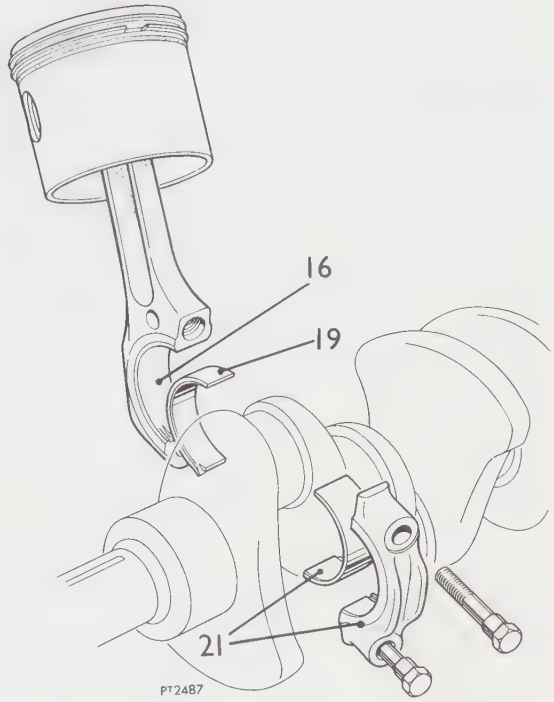

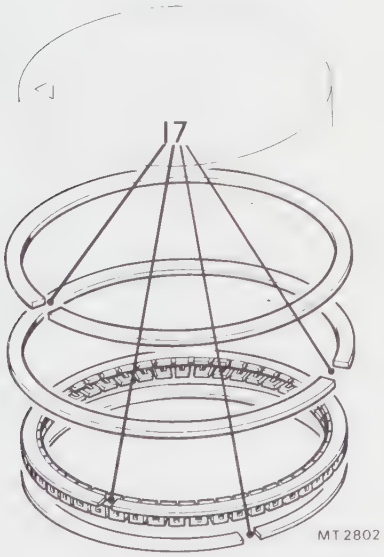

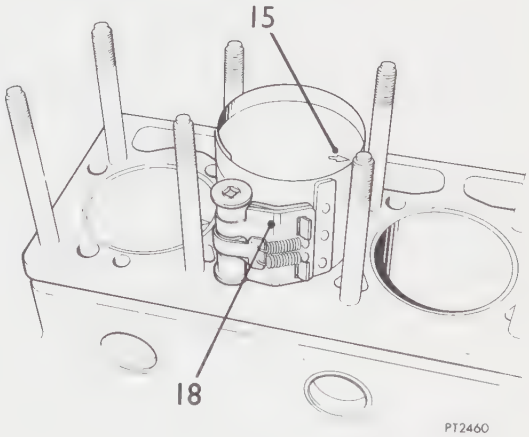

PISTONS AND/OR RINGS – ENGINE SET

– Remove and refit	12.17.03
Pistons and/or rings	12.17.04
Pistons and/or rings – extra each	12.17.06

See operation 12.17.10.

CONNECTING RODS AND PISTONS

– Overhaul	12.17.10
Gudgeon pin bush – each – remove and refit	12.17.13

Special tools: S335, S336

CAUTION: Do not mix any of the components during this operation.

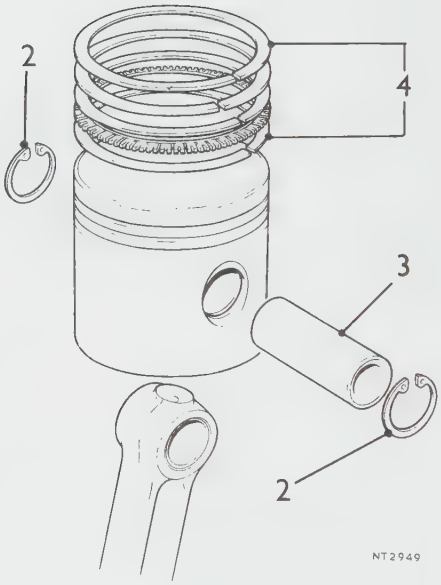

Removing

1. Remove the connecting rods and pistons. 12.17.01.

Dismantling

2. Remove the two circlips retaining the gudgeon pin in the piston.
3. Push out the gudgeon pin and separate the piston from the connecting rod but mark for reassembly.
4. Remove from the piston the two compression rings and the oil control ring.
5. Repeat operations 2 to 4 on the remaining pistons and connecting rod assemblies.
6. Degrease all components and remove carbon deposits from the pistons.

continued

Examination – Pistons and Gudgeon Pins

[CAUTION: Every check and fitting operation described here is essential. If you lack the skills or the proper equipment, please turn this work over to your Authorized Dealer or to a qualified automotive repair shop.]

7. Examine the pistons for damage, scoring and cracks.
8. Determine the maximum clearance that exists between the pistons and their respective bores as follows:
   a. Measure the piston across the skirt–dimension 'A'.
   b. Using a cylinder bore measuring gauge determine the maximum cylinder bore wear.
   c. Subtract a. from b. and compare the result with the clearance given in DATA for a new engine.
9. Check the width of the piston ring grooves and the gap between the piston ring and piston groove.
10. Examine the gudgeon pin for scores and pitting. Check for wear–see Data and note that the gudgeon pin should be a light push fit at a temperature of 68°F. If the gudgeon pin passes through the bush under its own weight it is too slack.
11. Check the piston ring gaps when squarely inserted in the cylinder bores.
12. Check the gudgeon pin bush in the connecting rods for wear and if necessary renew using a suitable hand press. Ensure that the oil hole in the bush corresponds with the hole in the connecting rod. Ream the new bush to size–see DATA.

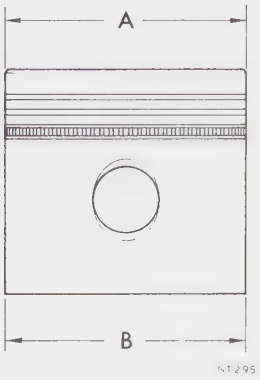

NOTE: Two grades of standard piston designated F and G are fitted to new engines built on production. The cylinder block is stamped to indicate the individual bore grade. The grade of the corresponding piston is stamped on the piston crown.
Whilst these pistons are not supplied for service purposes a single standard piston 0.001 in (0.0254 mm) oversize is available, therefore should it be necessary to fit a new service piston to a standard bore, the bore must be honed to accommodate the piston with the specified clearance–see DATA.

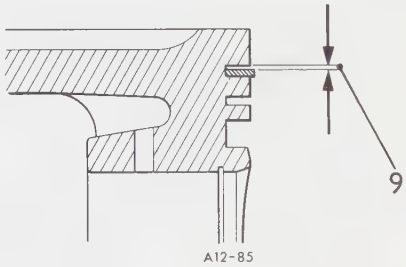

continued

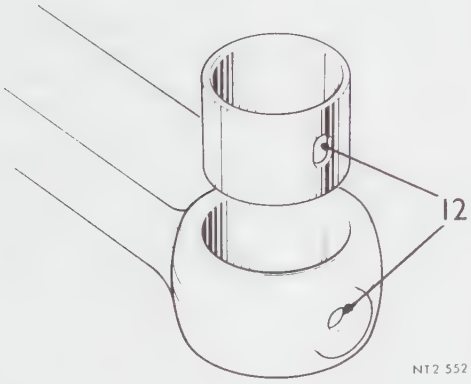

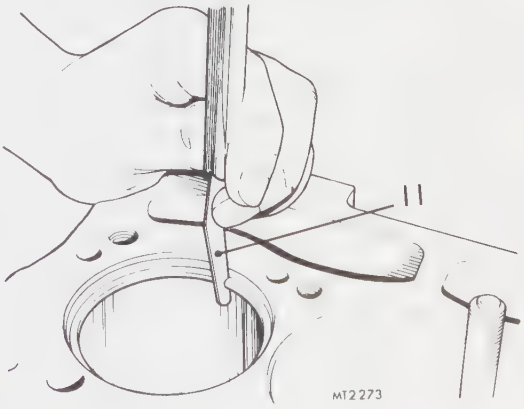

Examination – Connecting Rods

13. Using special tool S335 and adaptor S336–101, check the connecting rods for:
    A Bend
    B Twist
    Rods that exceed the tolerances should be realigned or renewed–see Data.

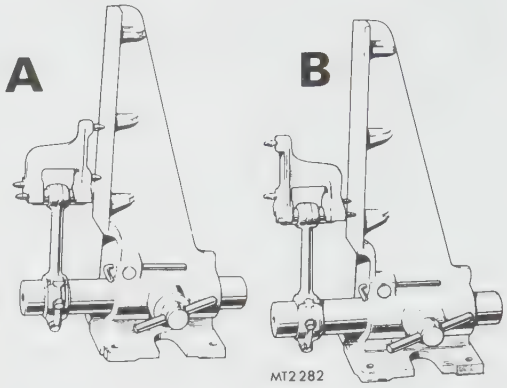

Reassembling

14. Fit the piston rings in the following order:

    NOTE: The oil ring comprises three parts (A), (B) and (C) namely the centre expander rail flanked by two identical chrome rails.

    Fit the expander rail A into the bottom groove ensuring that the ends butt, not overlap.
    Fit the bottom chrome rail B into bottom groove.
    Fit the top chrome rail C to bottom groove.
    Fit the second compression ring D to the centre groove in the piston with the word 'TOP' uppermost.
    Fit the top compression chrome ring E with the groove downwards.

15. Refit the pistons to the connecting rods ensuring that:
    a. When assembled the relationship is as described and illustrated in instructions 15 and 16, 12.17.01.
    b. The gudgeon pins are properly located by the circlips.
    c. The oil holes in the piston gudgeon pin bosses are clear.
16. Refit the connecting rods and pistons to the engine. 12.17.01.

[**NOTE:** If wear has left ridges of metal around the tops of the cylinders (known as top cylinder ridges), you should not replace the piston rings unless these ridges are first removed with a special ridge reaming tool. If unremoved, the ridges may break the new top rings.]

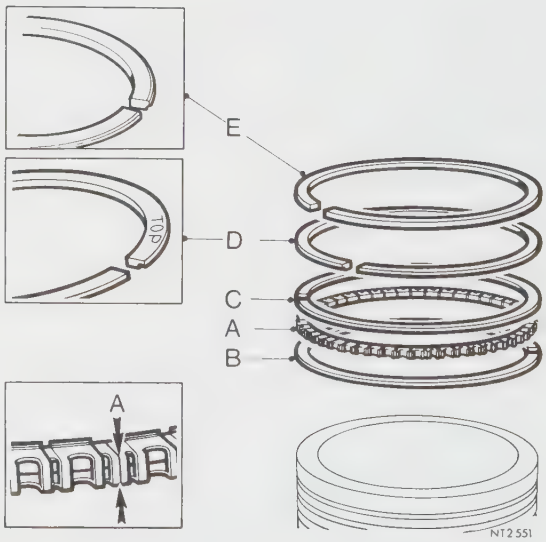

DATA

Cylinder bore size (nominal)	2.9000 in (73.66 mm)
Piston clearance in bore at bottom of skirt at right-angles to the gudgeon pin	0.002 – 0.003 in (0.05 – 0.07 mm)

Pistons

Groove width: Top compression	0.064 to 0.065 in (1.625 to 1.650 mm)
2nd compression	0.064 to 0.065 in (1.625 to 1.650 mm)
Oil control (1975)	0.157 to 0.158 in (3.99 to 4.02 mm)
Oil control (1976-77)	0.1578 to 0.1588 in (4.008 to 4.034 mm)

Piston rings

Top compression	
–width	0.121 to 0.128 in (3.073 to 3.251 mm)
–thickness	0.0615 to 0.0625 in (1.562 to 1.587 mm)
–diameter	2.8995 in (73.647 mm)
–gap when fitted to standard bore	0.012 to 0.022 in (0.30 to 0.55 mm)
–free gap	0.394 to 0.515 in (10.0 to 13.1 mm)
2nd compression	
–width	0.121 to 0.128 in (3.073 to 3.251 mm)
–thickness	0.0615 to 0.0625 in (1.562 to 1.587 mm)
–diameter	2.8995 in (73.647 mm)
–gap when fitted to standard bore	0.012 to 0.022 in (0.30 to 0.55 mm)
–free gap	0.394 to 0.515 in (10.0 to 13.1 mm)
Oil control–chrome rail	
–width	0.135 to 0.141 in (3.43 to 3.58 mm)
–thickness	0.0230 to 0.0250 in (0.58 to 0.64 mm)
–diameter	2.9015 in (73.7 mm)
Oil control–expander rail	
–thickness	0.1415 to 0.1515 in (3.594 to 3.838 mm)
–gap when fitted	NIL–ends to butt
Oversize rings available	0.010, 0.020, 0.030 in (0.25, 0.52, 0.76 mm)
Gudgeon pin	
–length	2.490 to 2.500 in (63.25 to 63.50 mm)
–diameter	0.81230 to 0.81250 in (20.63 to 20.64 mm)

Connecting rods

–small end bush fitted internal diameter	0.8126 to 0.8129 in (20.64 to 20.65 mm)
– external diameter	
–bent not to exceed	0.0015 in (0.04 mm)
–twist not to exceed	0.0045 in (0.114 mm)

CONNECTING ROD BEARINGS – SET

Remove and refit	12.17.16
Connecting rod bearing – one	12.17.17
Connecting rod bearing – extra each	12.17.18

Removing

1. Remove the sump. 12.60.44.
2. Remove the oil pick-up strainer. 12.60.20.
3. Turn the crankshaft to bring the connecting rod big-ends to be removed to an accessible position.
4. Remove the bearing cap complete with shell bearing and connecting rod dowels.
5. Push the connecting rod and piston upwards sufficiently to clear the crankpin to enable the upper shell bearing to be removed.
6. Remove the upper shell bearing and marry-up the bearing cap with its respective connecting rod.
   DO NOT MIX. Check that the number stamped on the connecting rod corresponds with number on the cap.

Refitting

7. Insert the upper shell bearing into the connecting rod big-end ensuring the tag locates in the recess.
8. Lubricate the crankpin with clean engine oil.

[**NOTE:** If the engine is to be stored for some time following repairs, it is advisable to use assembly lubricant (available from automotive supply stores) or a light coating of multipurpose grease on crankpins rather than an ordinary engine oil. Many experienced mechanics choose to use assembly lubricant whenever new bearing shells are installed.]

9. Pull the connecting rod onto the crankpin.
10. Fit the shell bearing into the bearing cap ensuring the lug locates in the recess.
11. Fit the cap to the connecting rod big end and using new bolts tighten them evenly to the correct torque–see Section 06.
12. Reverse instructions 1 and 2.

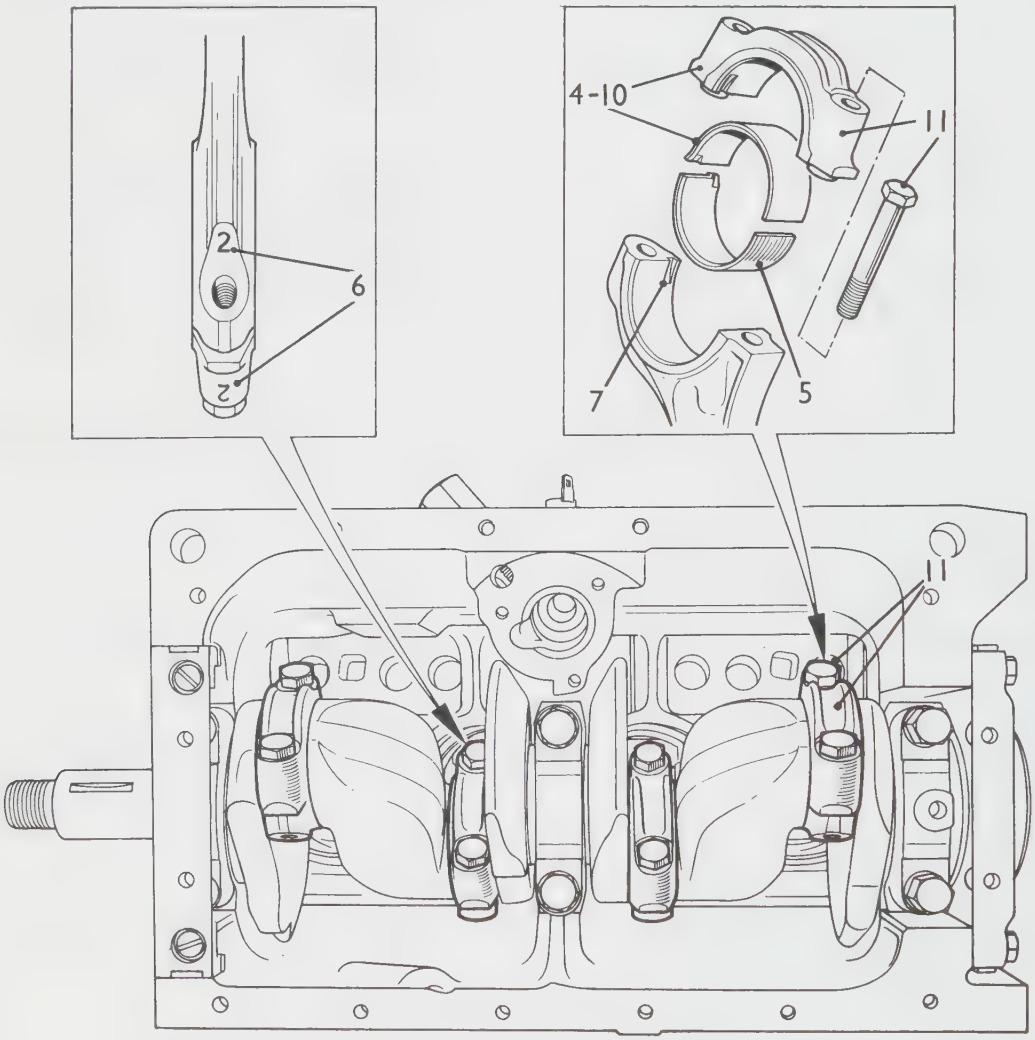

[**NOTE:** The connecting rod side clearance should be between 0.0025 and 0.0086 in (0.063 and 0.218 mm). If you check the rod bearing clearance with Plastigage® (available from automotive supply stores), the clearance should be between 0.0005 and 0.0020 in (0.012 and 0.050 mm).]

PT2 451

CRANKSHAFT PULLEY (U.K. AND EUROPEAN SPECIFICATION)

– Remove and refit 12.21.01

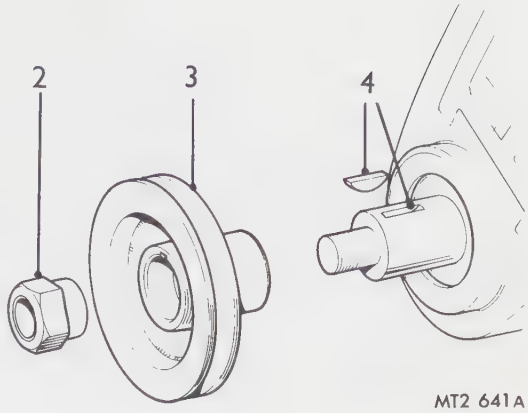

Removing

1. Remove the alternator drive belt.
2. Working below the car, remove the crankshaft pulley retaining nut (anti-clockwise).
3. Withdraw the pulley.

Refitting

4. Ensure the Woodruff key is in position in the key-way.
5. Reverse instructions 1 to 3 ensuring:
   a. the pulley nut is tightened to the correct torque figure–see Section 06.
   b. the alternator drive belt is correctly tensioned.

CRANKSHAFT PULLEY (U.S.A. Catalytic and non Catalytic converter specification)

– Remove and refit 12.21.01

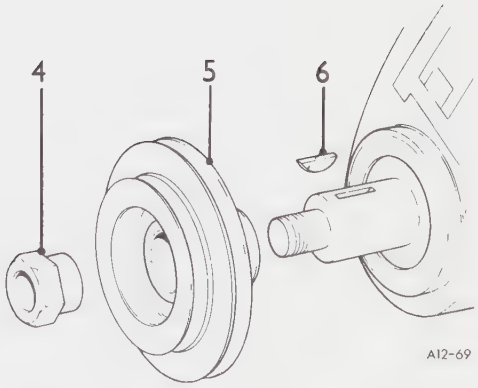

Removing

1. Remove the air pump drive belt. 17.25.15.
2. Remove the alternator drive belt.
3. Slacken the fan blades to allow clearance for withdrawing pulley.
4. Remove the crankshaft pulley retaining nut (anti-clockwise) working below the car.
5. Withdraw the crankshaft pulley.

Refitting

6. Fit the pulley locating it on the crankshaft key.
7. Fit and tighten the retaining nut to the correct torque figure–see Section 06.
8. Fit and tension the alternator drive belt.
9. Fit and tension the air pump drive belt. 17.25.15.

CRANKSHAFT REAR OIL SEAL

– Remove and refit 12.21.20

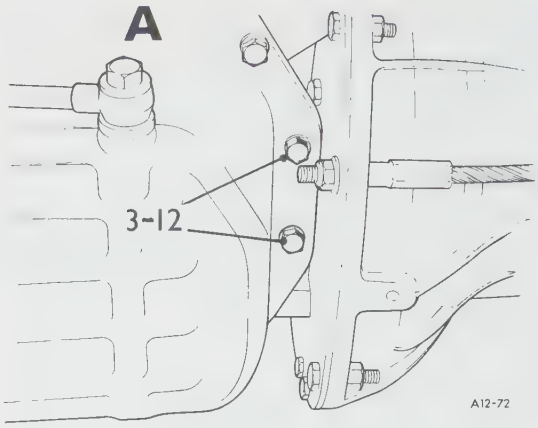

Removing

1. Remove the gearbox assembly, 37.20.01 or the engine assembly. 12.41.01.
2. Remove the rear adaptor plate. 12.53.03.
3. Remove the two rear centre sump bolts.
4. Remove the seven bolts and spring washers securing the oil seal housing to the crankcase and remove the housing complete with the seal, taking care not to damage the sump gasket.
5. Press out the oil seal taking care not to damage or distort the housing.
   Note: Illustration A shows the U.S.A. Catalytic Converter specification.

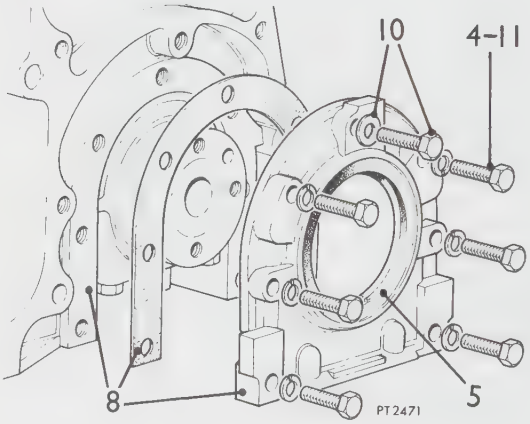

Refitting

6. Clean the oil seal housing and crankcase mating faces ensuring all traces of old gasket and jointing are removed.
7. Place the oil seal housing on a flat surface with the machined face uppermost. Smear the outside diameter of a new oil seal with grease and with the lip side trailing squarely press in the seal. Remove surplus grease from the housing.
8. Apply sealing compound to the crankcase and oil seal housing mating faces and fit a new gasket.
9. Lubricate the oil seal inner diameter and the crankshaft with clean engine oil and carefully ease the oil seal and housing over the crankshaft and locate it on the crankcase face.
10. Secure the housing to the crankcase noting that the top bolt has a copper washer under the head to prevent oil seepage due to the bolt protruding into the crankcase.
11. Use spring washers under the remaining bolt heads and tighten evenly. Ensure that any surplus sealing compound is removed.
12. Refit the two sump bolts.
13. Refit the adaptor plate. 12.53.03.
14. Refit the gearbox assembly, 37.20.01 or engine assembly. 12.41.01.

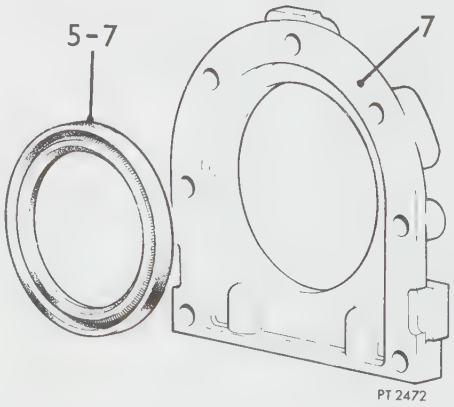

CRANKSHAFT END-FLOAT

– Check and adjust 12.21.26

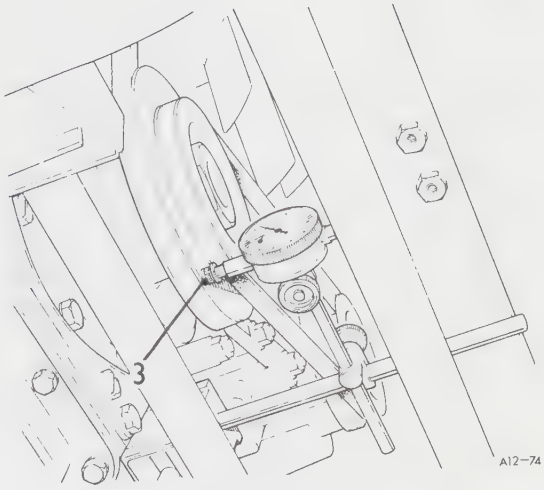

Checking

1. Isolate the battery.
2. Raise the car on a ramp.
3. Attach a magnetic type base to the crankcase and position a dial gauge so that the stylus rests squarely against the crankshaft pulley.
4. Using a suitable lever move the crankshaft rearwards and zero the dial gauge.
5. Lever the crankshaft forward and note the dial gauge reading–see Data.
6. Repeat instructions 4 and 5 several times to ensure a true reading.
7. Remove the dial gauge and stand, lower the ramp and reconnect the battery.

Adjusting

8. Disconnect the battery.
9. Remove the sump. 12.60.44.
10. Remove the two bolts securing the rear main bearing cap and remove the cap and lower shell.
11. Rotate the crankshaft to facilitate the removal of thrust washers.
12. Fit new thrust washers feeding them into the crankcase recesses. Rotate the crankshaft to assist the location. Ensure that the thrust washers are fitted with the oil grooves facing the crankshaft journal sides.

[**NOTE:** Standard thrust washers are available in thicknesses from 0.091 to 0.093 in (2.31 to 2.36 mm). Oversize thrust washers are available in thicknesses from 0.096 to 0.098 in (2.44 to 2.49 mm).]

13. Attach a magnetic type base to the crankcase and position a dial gauge so that the stylus rests squarely against the crankshaft pulley.
14. Lever the crankshaft rearwards and zero the dial gauge. Lever the crankshaft forward and note the reading–see Data. Repeat this instruction several times to ensure a true reading.
15. Fit the rear main bearing cap and lower shell and secure with the bolts and tighten to the correct torque.
16. Refit the sump ensuring:
    a. A new gasket is fitted.
    b. The sump is refilled with oil to the high mark on the dipstick.
17. Reconnect the battery.

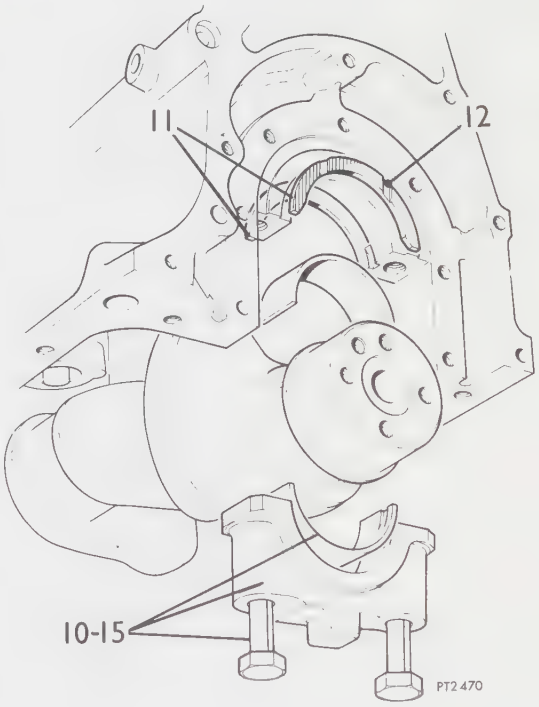

DATA

Crankshaft end-float . . . . . 0.004 – 0.008 in (0.102 – 0.203 mm)

CRANKSHAFT

– Remove and refit **12.21.33**

Removing

1. Remove the engine.12.41.01.
2. Remove the starter motor.
3. Remove the four bolts securing the flywheel to the crankshaft and lift off the flywheel. 12.53.07.
4. Remove the clutch assembly.
5. Remove the seven bolts securing the engine rear adaptor plate to the cylinder block and remove the adaptor plate. 12.53.03.
6. Remove the alternator. 86.10.02.
7. Remove the air pump (Catalytic and non Catalytic Converter specification). 17.25.07.
8. Remove the water pump housing complete with water pump, thermostat housing and fan. 26.50.03.
9. Remove the crankshaft pulley.
10. Remove the timing chain cover. 12.65.01, instructions 8 and 9.
11. Remove the oil thrower.
12. Bend back the lock washer and remove the two bolts securing the camshaft sprocket.
13. Remove the crankshaft and camshaft sprockets together with the timing chain, Woodruff key and shims.
14. Remove the front mounting plate. 12.25.10.
15. Remove the dipstick, and the dipstick tube on U.S.A. Catalytic Converter specification only.
16. Remove the sump.
17. Remove the oil pump. 12.60.26.

continued

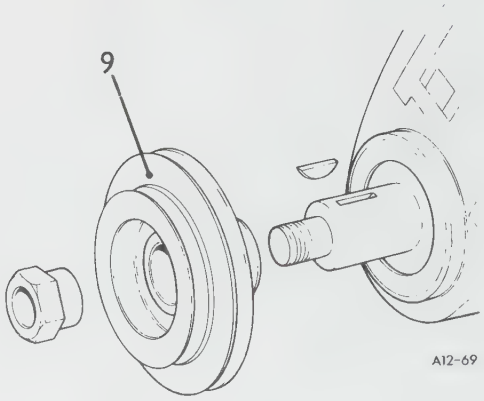

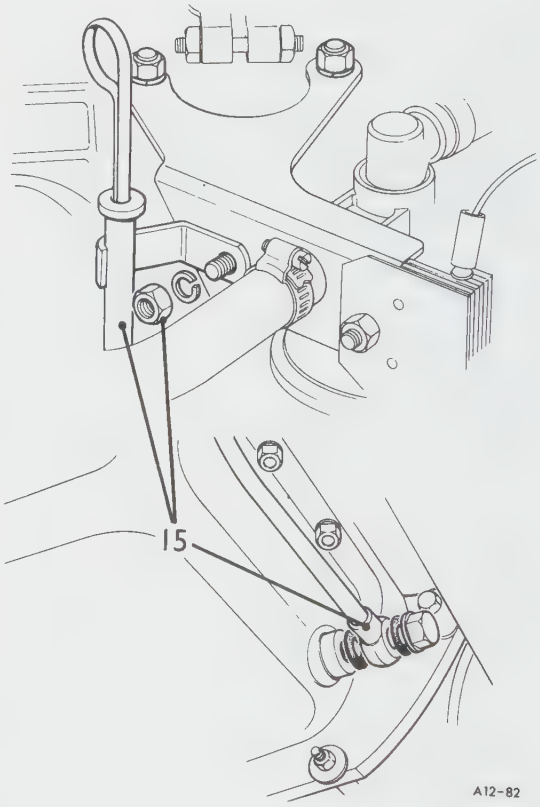

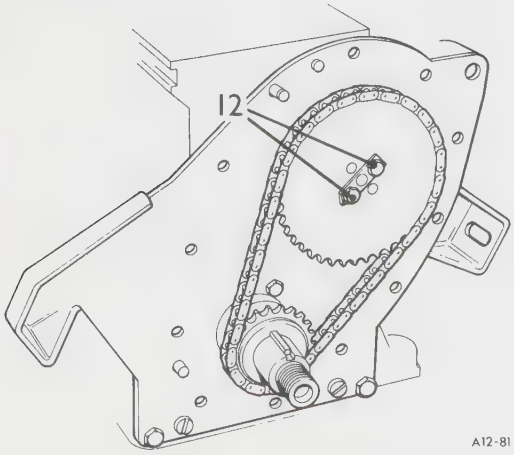

18. Remove the front sealing block.
19. Remove the crankshaft rear oil seal. 12.21.20.
20. Disconnect the connecting rods from the crankshaft. 12.17.16, instructions 3 to 6. Check the identification marks for reassembly. DO NOT MIX.
21. Remove the front centre and rear main bearing caps and shells. 12.21.39, instructions 4 to 6.
22. Remove the thrust washers from the rear main bearing.
23. Lift out the crankshaft.

Refitting

Lubricate all parts before assembly.

[**NOTE:** If the engine is to be stored for some time following repairs, it is advisable to use assembly lubricant (available from automotive supply stores) or a light coating of multipurpose grease on crankpins rather than an ordinary engine oil. Many experienced mechanics choose to use assembly lubricant whenever new bearing shells are installed.]

24. Fit the upper bearing shells to the crankcase and the thrust washers to the rear main bearing.
25. Fit the lower shells to the bearing caps.
26. Lower the crankshaft into the crankcase.
27. Fit the bearing caps and tighten the front centre and rear main bearing bolts.
28. Connect the connecting rods to the crankpins and tighten the retaining nuts to the correct torque--see Section 06.

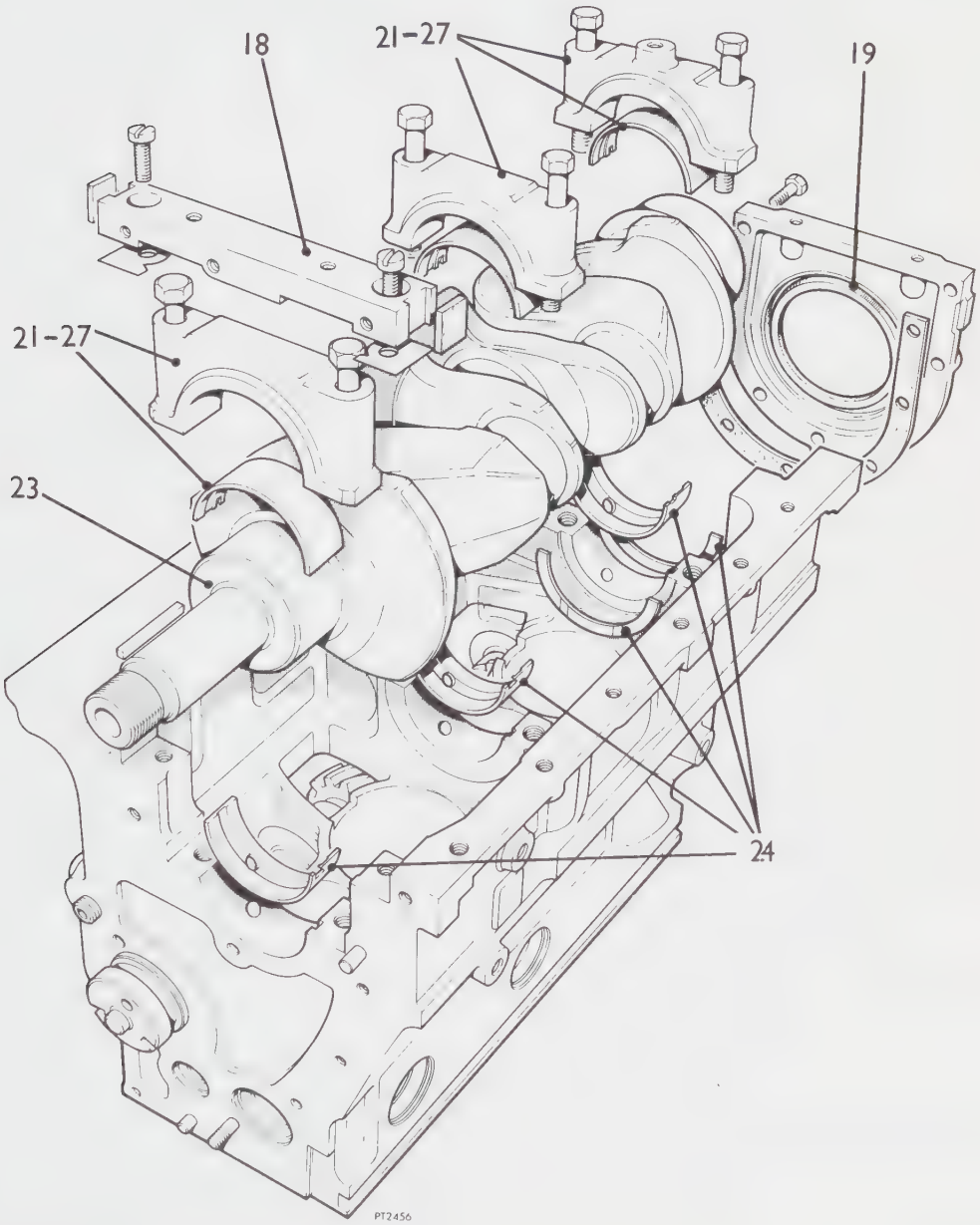

Sheet 2 12.21.33

29. Check, and adjust if necessary, the crankshaft end-float. 12.21.26.
30. Fit the front sealing block. 12.25.11.
31. Fit the rear main oil seal. 12.21.20.
32. Fit the oil pump. 12.60.26.
33. Fit the sump, renewing the gasket. Tighten the retaining bolts evenly to the correct torque – see Section 06.
34. Fit the flywheel, 12.53.07, ensuring that the crankshaft spigot bush is in position.
35. Fit the clutch assembly. 33.10.01.
36. Fit the front mounting plate and gasket, ensuring that:
    a. All traces of old gasket and jointing compound are removed from the cylinder block joint face.
    b. The cylinder block face of the new gasket is smeared with jointing compound.
    c. The mounting plate is located correctly over the dowels.
    d. The retaining bolts and screws are tightened evenly. See 12.25.10.
37. Fit the timing chain and sprockets. 12.65.12.
38. Check the valve timing. 12.65.08.
39. Fit the oil thrower, ensuring that the dished periphery faces the timing cover.
40. Fit the timing cover. 12.65.01.
41. Fit the crankshaft pulley, tightening the retaining nut to the correct torque–see Section 06.
42. Fit the water pump housing complete with water pump, fan and thermostat housing. Ensure that the new gasket is fitted with jointing compound.
43. Fit the air pump (U.S.A. Catalytic and non Catalytic Converter specification). 17.25.07.
44. Fit the alternator and drive belt. 86.10.02.
45. Fit the starter motor.
46. Fit the engine. 12.41.01.
47. Fit the dipstick tube (U.S.A. Catalytic Converter specification).
48. Fill the sump with oil of a recommended grade to the high mark on the dipstick.

[**NOTE:** There is little use in fitting new bearing shells if the crankshaft journals and crankpins are worn undersize, worn out-of-round, or worn to a taper. Measure each journal and crankpin with a micrometer. Check both ends of each journal or crankpin, making two measurements at 90° to one another at each point. If there is a difference of more than 0.002 in (0.05 mm) between any of these measurements, the crankshaft should be either replaced or reconditioned to accept one of the undersize bearing sets listed under Data.]

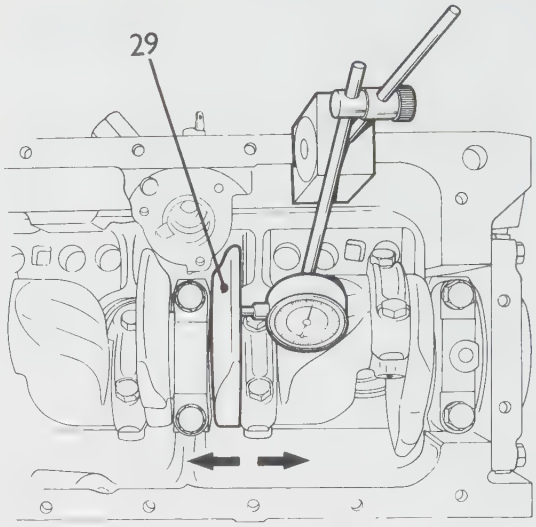

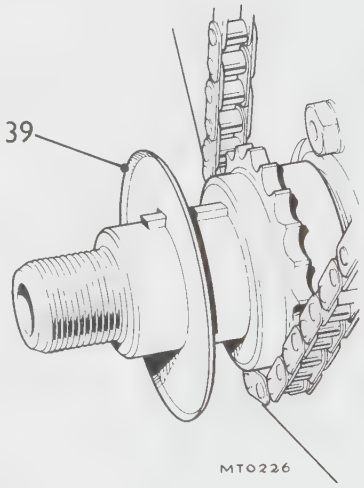

[**NOTE:** Standard thrust washers are available in thicknesses from 0.091 to 0.093 in (2.31 to 2.36 mm). Oversize thrust washers are available in thicknesses from 0.096 to 0.098 in (2.44 to 2.49 mm).]

DATA

Main bearing journal diameter (3)	2.3115 to 2.3120 in (58.713 to 58.725 mm)
Crankpin diameter (4)	1.8750 to 1.8755 in (47.625 to 47.638 mm)
Maximum run out of centre journal with front and rear supported on knife edge rollers	0.003 in T.I.R. (0.076 mm)
Maximum out of balance with key and dowel fitted	0.3 oz in (3.36 g cm)
Crankshaft end-float tolerance	0.004 to 0.008 in (0.10 to 0.20 mm)
Main and big-end bearings are available in the following sizes	0.010 in – 0.020 in – 0.030 in (0.25 mm – 0.51 mm – 0.76 mm)

MAIN BEARING – SET

– Remove and refit	12.21.39
Front main bearing 1 to 4, and 7 to 12	12.21.41
Centre and rear main bearing 1, 2, 5, 6 7 to 10 and 12	12.21.42

Removing

1. Remove the sump. 12.60.44.
2. Remove the oil pump strainer.
3. Remove the front sealing block. 12.25.11.
4. Remove the front main bearing cap bolts and withdraw the cap complete with lower shell. Remove the upper shell and check that the cap is marked for reassembly.
5. Remove the centre main bearing bolts and withdraw the cap and lower shell. Check identification marks for reassembly and withdraw the upper shell.
6. Remove the rear main bearing cap bolt and withdraw the cap and lower shell. Check that the cap is marked for reassembly, and remove the upper shell.

Refitting

7. Fit the shell bearings to the front, centre and rear main bearing caps, ensuring that the tags locate in the recesses.
8. Lubricate and feed the upper shells – tag end last – between the crankshaft journals and bearing bores, ensuring that the tags locate in the recesses.
9. Lubricate the lower shells and refit the caps, tightening the front, centre and rear main bearing cap bolts. Ensure that the identification marks coincide.

[**NOTE:** If the engine is to be stored for some time following repairs, it is advisable to use assembly lubricant (available from automotive supply stores) or a light coating of multipurpose grease on the crankshaft journals and the crankpins rather than ordinary engine oil. Many experienced mechanics choose to use assembly lubricant whenever new bearing shells are installed.]

10. Check, and adjust if necessary, the crankshaft end-float. 12.21.26.
11. Fit the front sealing block. 12.25.11.
12. Reverse instructions 1 and 2 ensuring that the sump is filled to the 'high' mark on the dipstick.

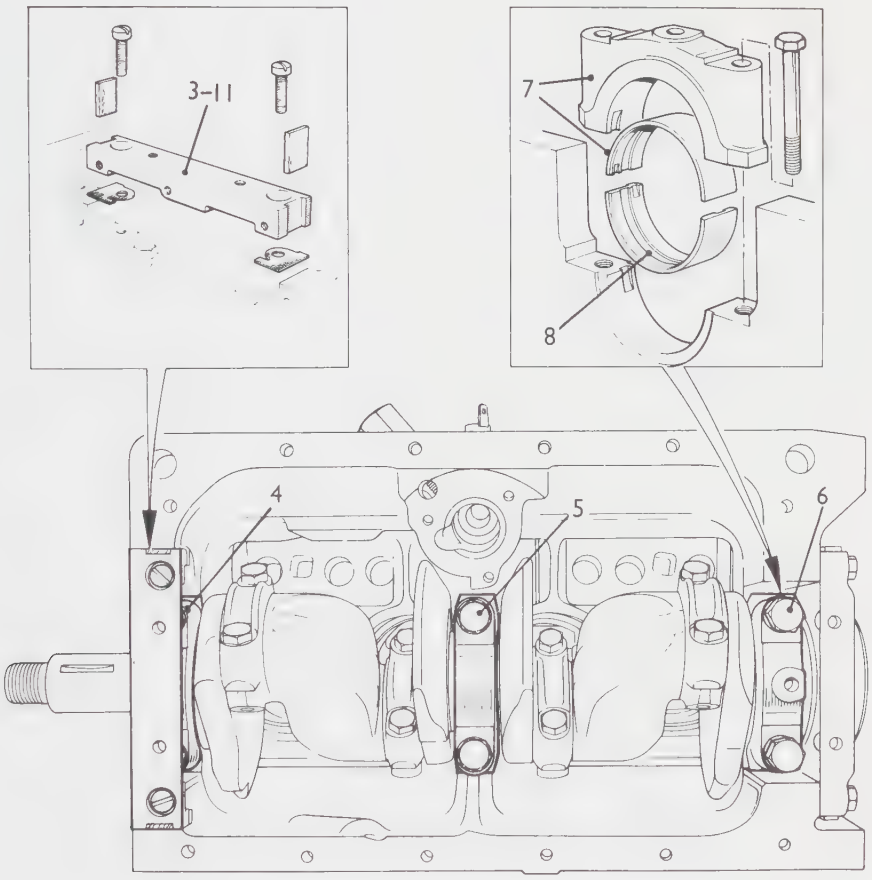

PT2 452

[**NOTE:** There is little use in fitting new bearing shells if the crankshaft journals and crankpins are worn undersize, worn out-of-round, or worn to a taper. Measure each journal and crankpin with a micrometer. Check both ends of each journal or crankpin, making two measurements at 90° to one another at each point. If there is a difference of more than 0.002 in (0.05 mm) between any of these measurements, the crankshaft should be either replaced or reconditioned to accept one of the undersize bearing sets listed under Data 12.21.33.]

CRANKSHAFT SPIGOT BUSH

– Remove and refit 12.21.45

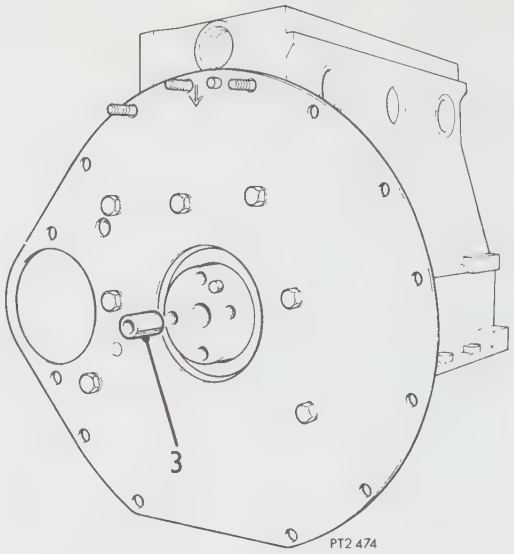

Removing

1. Isolate the battery.
2. Remove the flywheel. 12.53.07.
3. Remove the spigot bush which is a loose fit in the crankshaft flange.

Refitting

4. Smear the spigot bush with zinc oxide grease and refit.
5. Reverse instructions 1 and 2.

CYLINDER PRESSURES

– Check 12.25.01

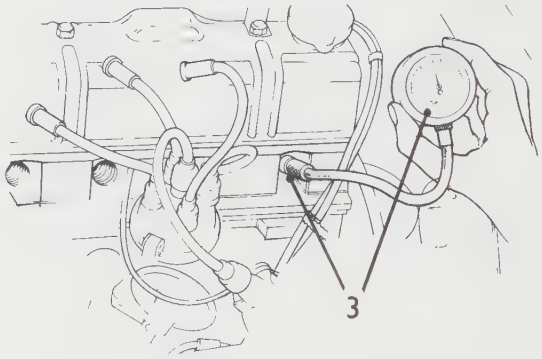

MT2 648

1. Run the engine until normal temperature is attained as indicated by the temperature gauge.
2. Remove the spark plugs.
3. Fit a compression gauge to No. 4 cylinder.
4. Turn the engine over with the starter motor with the throttle wide open.
5. Note and record the gauge reading.
6. Repeat on the remaining cylinders.

   NOTE: All cylinders should have pressures within 10 lb/in^2 (0.70 kg/cm^2) differential.

CYLINDER BLOCK DRAIN PLUG

– Remove and refit 12.25.07

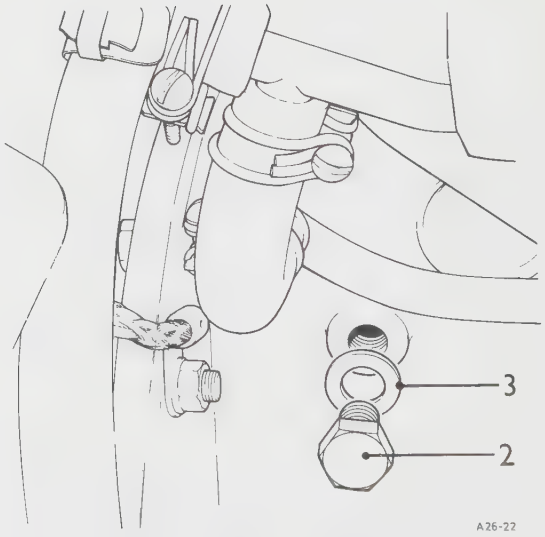

Removing

1. Drain the radiator–instruction 4. 26.10.01.
2. Remove the cylinder block drain plug.
3. Remove and discard the sealing washer.

Refitting

4. Clean the drain plug and cylinder block mating faces.
5. Fit the plug and new sealing washer.
6. Fill the cooling system 26.10.01 and check for leaks from the plug.

CYLINDER BLOCK FRONT MOUNTING PLATE GASKET

– Remove and refit 12.25.10

Removing

1. Isolate the battery.
2. Remove the alternator. 86.10.02.
3. Remove the air pump (U.S.A. Catalytic and non Catalytic Converter specification).
4. Remove the radiator.
5. Remove the water pump housing. 26.50.03.
6. Remove the timing chain cover. 12.65.01.
7. Remove the timing chain and sprockets. 12.65.12.
8. Remove the two bolts securing the camshaft locating plate and remove the plate.
9. Support the engine under the sump.
10. Remove the two nuts and bolts (two each side) securing the L.H. and R.H. engine mounting to the chassis.
11. Remove the three bolts securing the mounting plate to the cylinder block.
12. Remove the two screws securing the mounting plate to the sealing block.
13. Remove the front mounting plate complete with mounting rubbers.
14. Remove the front mounting plate gasket.
15. Remove the mounting rubbers from the mounting plate.

Refitting

16. Fit the engine mounting rubbers to the mounting plate leaving the retaining nuts slack.
17. Clean the cylinder block front face and remove all traces of the old gasket and sealing compound.
18. Coat the cylinder block side of a new gasket with sealing compound and fit it to the cylinder block front face.
19. Clean and offer up to the cylinder block the engine mounting plate ensuring that it locates correctly over the dowels. Secure in position with the three bolts and two screws.
20. Secure the L.H. and R.H. engine mountings to the sub-frame locations.
21. Tighten the nuts retaining the engine mountings to the mounting plate.
22. Remove the support from under the sump.
23. Fit the camshaft location plate.
24. Reverse instructions 1 to 7 ensuring:
    a. The camshaft sprocket is refitted in its original position and that the timing marks line up.
    b. A new water-pump housing gasket is fitted, using sealing compound.

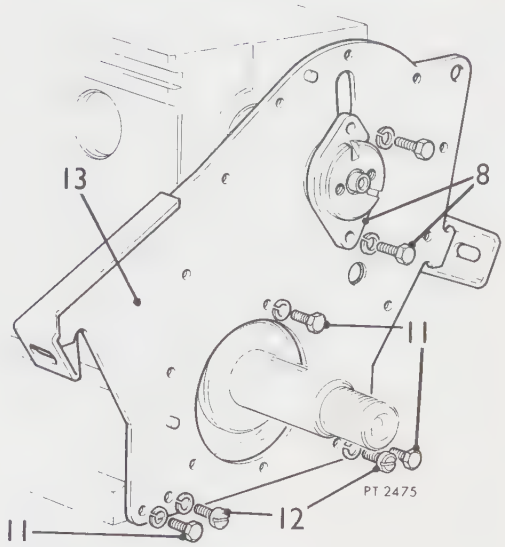

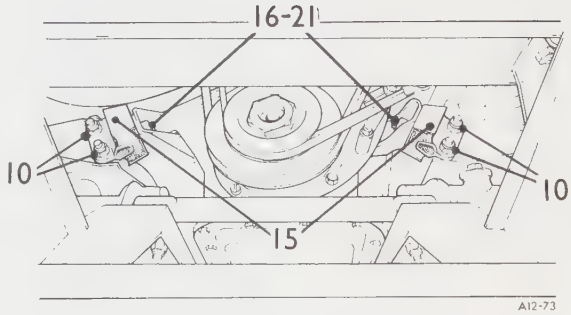

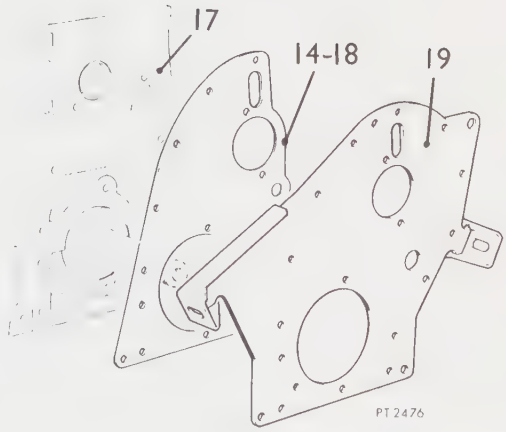

CRANKCASE FRONT SEALING BLOCK

– Remove and refit 12.25.11

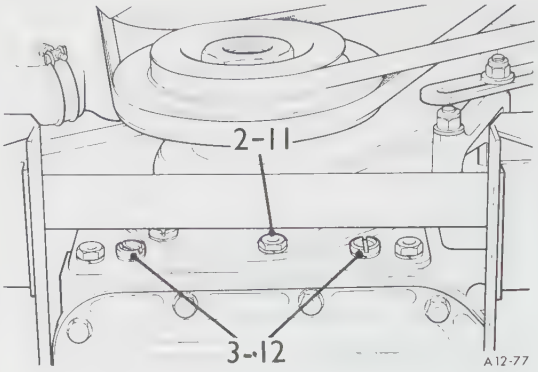

Removing

1. Remove the sump. 12.60.44.
2. Remove the lowest bolt from the timing chain cover.
3. Remove the two screws securing the front mounting plate to the sealing block.
4. Remove the two sealing block retaining screws.
5. Using a thin blade knife, carefully ease the front mounting plate gasket away from the sealing block.
6. Carefully withdraw the sealing block from the crankcase.

Refitting

7. Clean the sealing block and crankcase mating faces.
8. Coat the sealing block gaskets and the exposed section of mounting plate gasket with sealing compound.
9. Fit the gaskets to the crankcase.
10. Fit the sealing block and loosely secure with the retaining screws.
11. Fit and tighten the timing cover bolt.
12. Fit and tighten the mounting plate to sealing block screws.
13. Finally tighten the sealing block retaining screws.
14. Smear the wedges with sealing compound and drive them into the slots.
15. Trim the protruding ends of the wedges flush with the sealing block but do not undercut.
16. Refit the sump. 12.60.44.

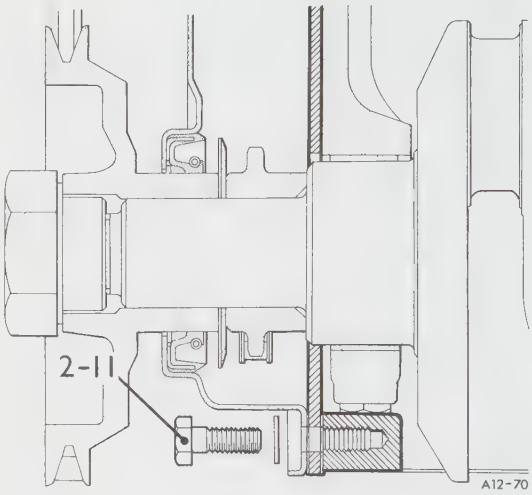

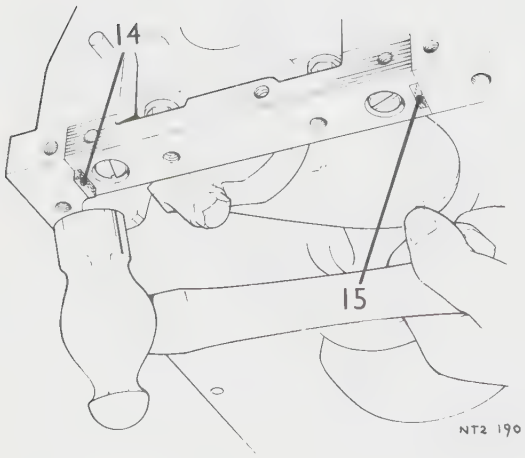

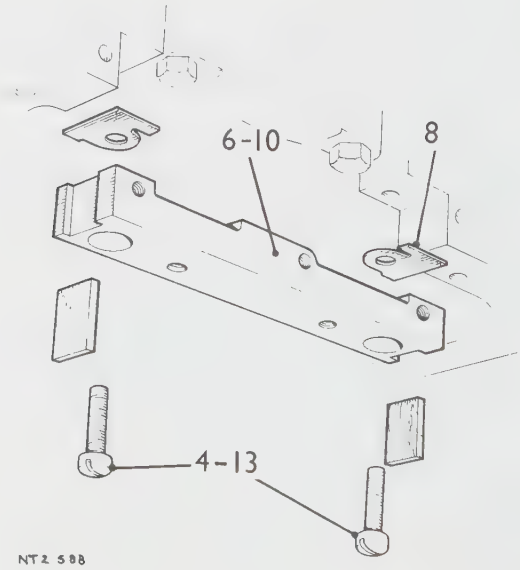

CYLINDER HEAD GASKET

– Remove and refit	12.29.01
Which includes cylinder head – remove and refit	12.29.10

Removing

1. Disconnect the battery.
2. Drain the cooling system. 26.10.01.
3. Disconnect the spark plug leads.
4. Disconnect from the check valve, the hose from the diverter and relief valve (U.S.A. Catalytic and non Catalytic specifications).
5. Remove the vacuum pipe from the manifold to the diverter and relief valve (U.S.A. Catalytic and non Catalytic specifications). See 17.25.21.
6. Disconnect from the manifold, the vacuum pipe to the distributor vacuum unit.
7. Slacken the alternator drive belt adjustment.
8. Remove the air cleaner. 19.10.02.
9. Disconnect the heater hoses from the bulkhead connections.
10. Disconnect the mixture control cable (U.S.A. non Catalytic and European).
11. Disconnect the emission and evaporative control hoses (U.S.A. Catalytic and non Catalytic specifications).
12. Disconnect the throttle cable from the carburetter linkage.
13. Remove the rocker cover. 12.29.42.
14. Disconnect, at the water-pump housing union, the heater return pipe. See instruction 44.
15. Disconnect the water-pump-to-inlet manifold hose at the water pump.
16. Remove the heat shield between the carburetter and air cleaner (U.S.A. Catalytic and non Catalytic specification).
17. Disconnect the exhaust pipe or the Catalytic converter from the exhaust manifold flange.
18. Remove the three bolts securing the water pump housing to the cylinder head. See instruction 37.
19. Remove the rocker shaft assembly. 12.29.54.
20. Withdraw the push rods.
21. Slacken the cylinder head retaining nuts reversing the tightening sequence. 12.29.27.

[**NOTE:** A convenient way to keep the pushrods in order is to push them through a piece of cardboard in which you have punched eight holes. If necessary, you can number the holes to identify the location of each pushrod in the engine. If the old cylinder head gasket has been leaking, check the cylinder head and the cylinder block for warping before you reassemble the engine. To check, lay a straightedge diagonally across the mating surfaces of both the head and the block. Using feeler gauges of various thicknesses, measure the clearance, if any, between the surface and the straightedge. Then repeat the check with the straightedge at the opposite diagonal. If the clearance at either diagonal exceeds 0.004 in (0.10 mm), the part should be milled or ground by a competent machinist in order to obtain a true surface.]

continued

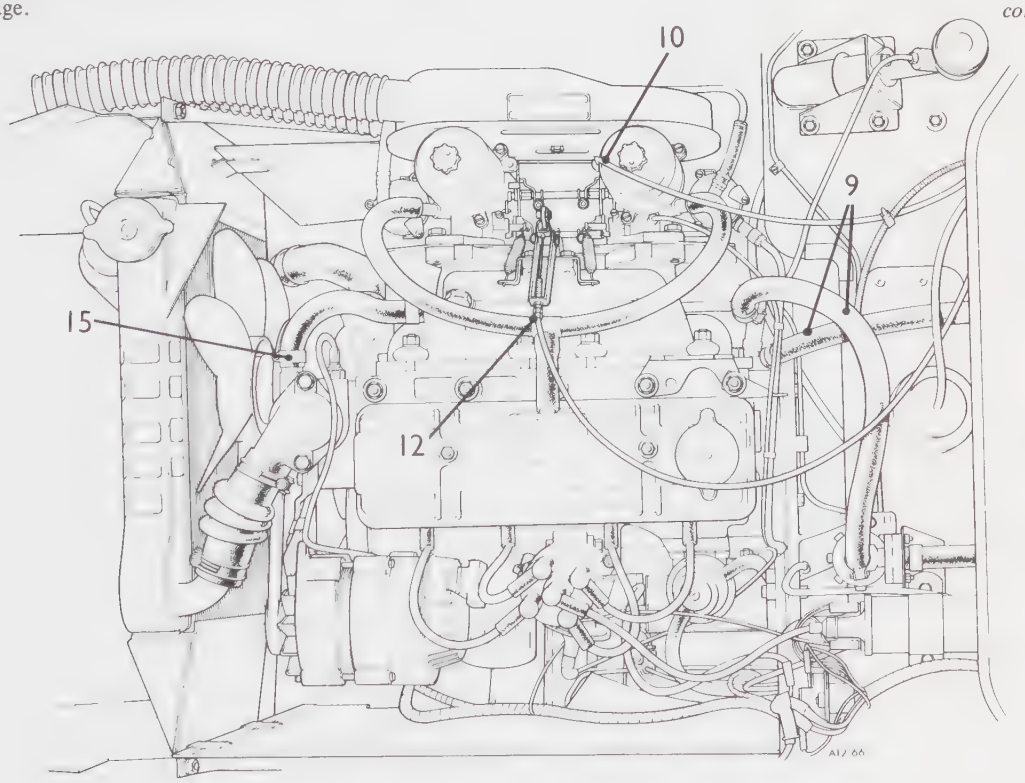

U.K. and European Specification

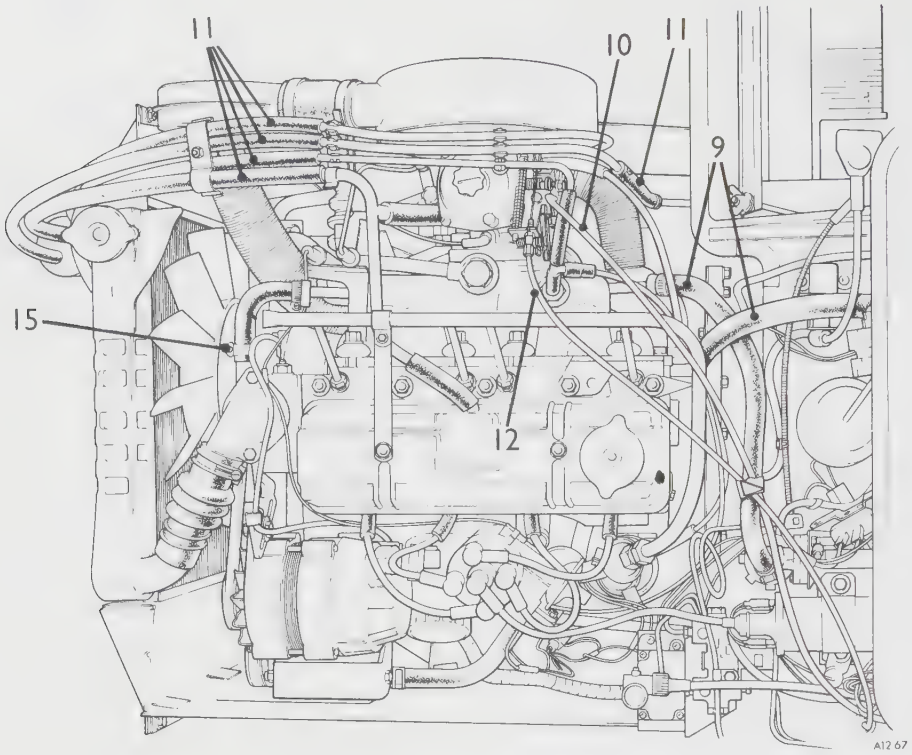

U.S.A. Non Catalytic Converter Specification

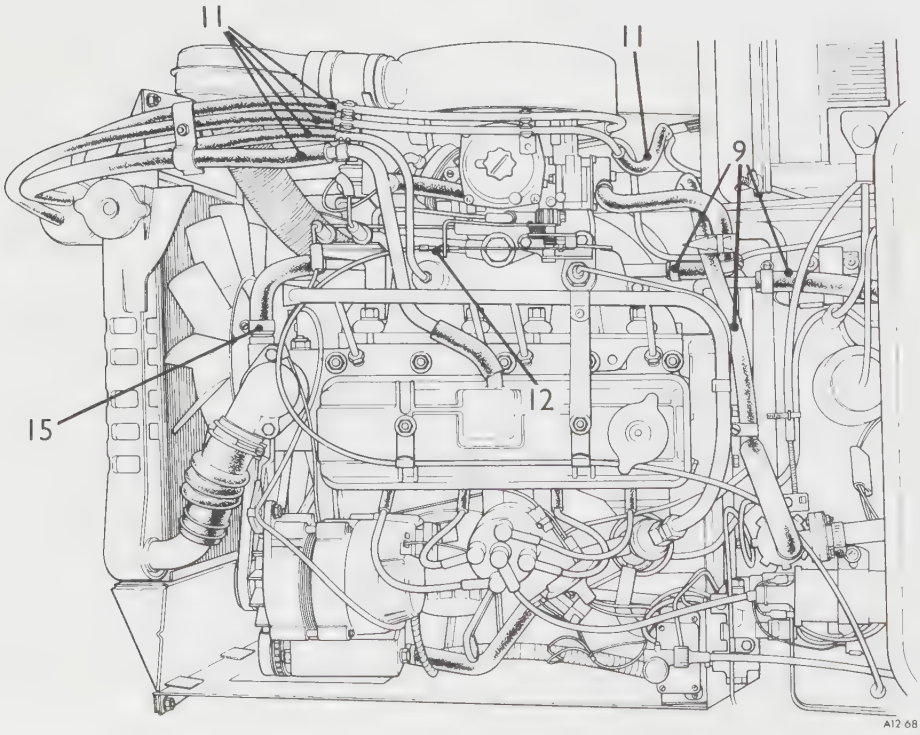

U.S.A. Catalytic Converter Specification

22. Remove the nuts and plain washers.
23. Remove the rear lifting eye.
24. Disconnect the fuel pipe from the pump to the carburetters.
25. Lift off the cylinder head complete with manifolds.
26. Remove and discard the cylinder head gasket.

Refitting

27. Clean the cylinder head and cylinder block mating faces, and water pump housing and cylinder block joint faces.
28. Fit a new cylinder head gasket ensuring that the word 'TOP' on the tag at the rear of the gasket is uppermost.
29. Lower the cylinder head onto the cylinder block locating and fitting a new gasket to:
    a. the manifold flange studs in the exhaust pipe flange (U.S.A. Catalytic Converter specification and European), or,
    b. the studs in the Catalytic Converter into the manifold flange.
30. Locate the rear lifting eye.
31. Fit and tighten the cylinder head retaining nuts and plain washers to the correct torque – see Section 06 – and in the sequence in operation 12.29.27.
32. Insert the push rods, ball end downwards, ensuring correct location in the cam followers.
33. Fit the rocker shaft assembly and evenly tighten the four retaining nuts and plain washers to the correct torque figure – see Section 06.

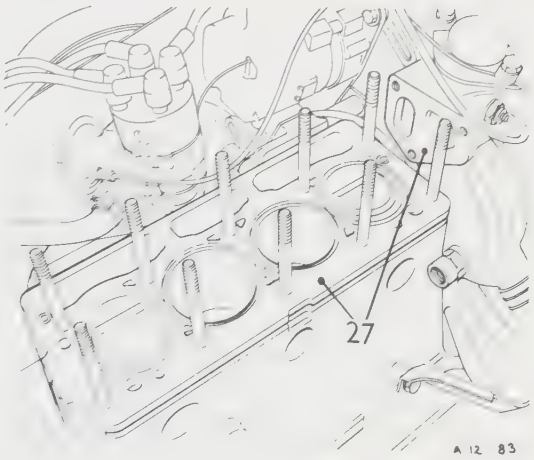

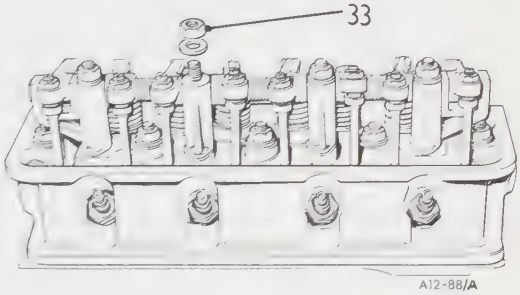

[CAUTION: To avoid distortion, tighten the cylinder head nuts to 38 to 45 lbf. ft (5.2 to 6.2 kgf.m) in the sequence given in 12.29.27.]

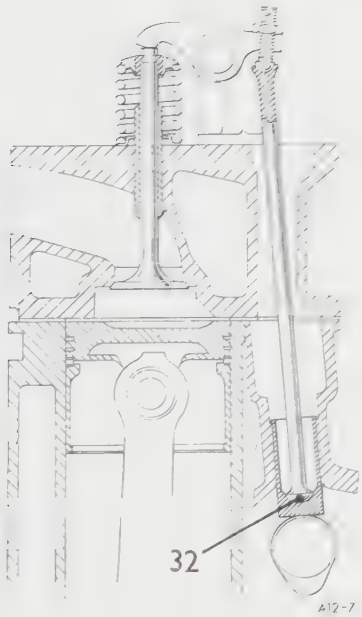

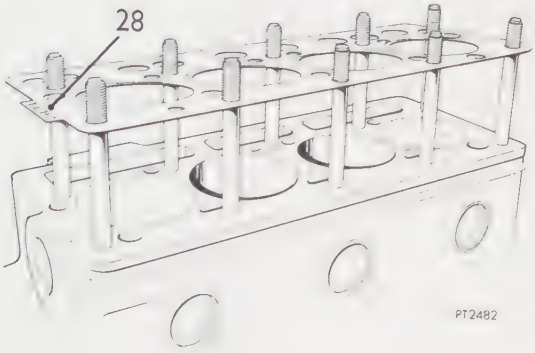

34. Fit and tighten the exhaust manifold flange nuts and lock nuts on the Catalytic converter.
35. Connect the emission and evaporative control hoses to their respective pipes (U.S.A. Catalytic and non Catalytic Converter specification).
36. Connect the vacuum pipe from the distributor to the rear carburetter on the U.K. and European model and to the forward vapour trap on the U.S.A. Catalytic and non Catalytic specifications.
37. Insert a new gasket between the water pump housing and cylinder head and tighten the three retaining bolts.
38. Tension the alternator drive belt.
39. Connect the diverter and relief valve pipe to the check valve (U.S.A. Catalytic and non Catalytic Converter specification).
40. Connect the fuel pipe to the pump outlet.
41. Fit the vacuum pipe from the manifold to the diverter and relief valve (U.S.A. Catalytic and non Catalytic converter specification).
42. Connect the H.T. leads to the spark plugs – firing order 1, 3, 4, 2.
43. Connect the heater hoses to the bulkhead connections.
44. Connect the heater return pipe union at the water pump housing.
45. Connect the inlet manifold heater hose to the water pump.
46. Fit the cylinder block drain plug.
47. Fit the air cleaner. 19.10.02.
48. Connect the hot air hose to the exhaust manifold (U.S.A. Catalytic and non Catalytic specifications).
49. Check and adjust the valve clearances. 12.29.48.
50. Fit the rocker cover. 12.29.42.
51. Fit the mixture control cable (European and non Catalytic converter specifications).
52. Fit the throttle cable to the carburetter linkage.
53. Fill the cooling system. 26.10.01.
54. Connect the battery.

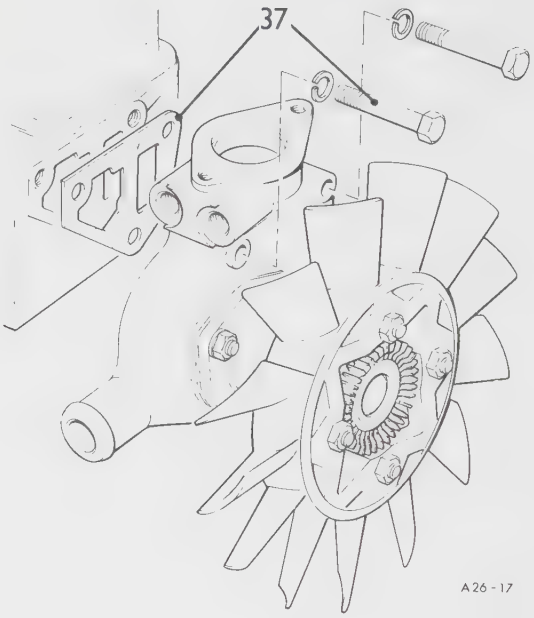

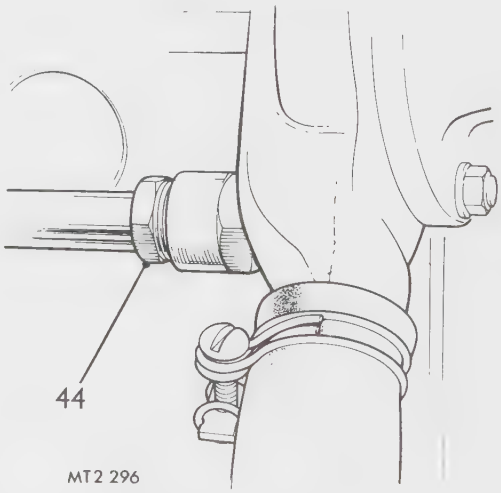

CYLINDER HEAD

Remove and refit	12.29.10

Removing

1. Remove the cylinder head as described under 12.29.01 – cylinder head gasket.
2. Remove the air manifold (U.S.A. Catalytic and non Catalytic Converter specifications).
3. Remove inlet and exhaust manifolds complete with carburetter(s).

Refitting

4. Using a new gasket fit the inlet and exhaust manifolds complete with carburetter(s).
5. Fit the air manifold.
6. Fit the cylinder head. 12.29.01.

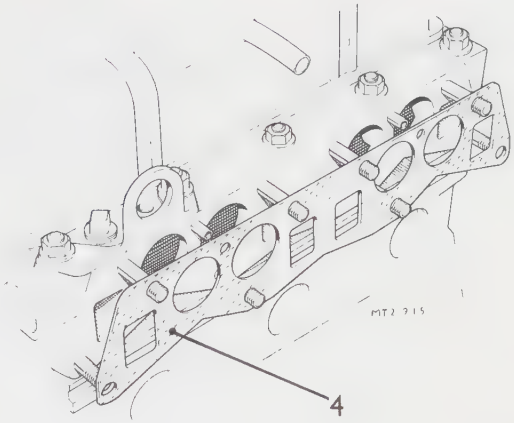

CYLINDER HEAD

– Overhaul	12.29.18

Which includes:

Valves – inlet and exhaust – remove and refit	12.29.62
Valves – inlet – remove and refit	12.29.63
Valves – exhaust – remove and refit	12.29.64
Valve guide – inlet – remove and refit	12.29.70
Valve guide – exhaust – remove and refit	12.29.71
Valve guide – inlet – extra each – remove and refit	12.29.72
Valve guide – exhaust – extra each – remove and refit	12.29.73
Inlet valve seat – remove and refit	12.29.76
Exhaust valve seat – remove and refit	12.29.77
Inlet valve seat – extra each – remove and refit	12.29.79
Exhaut valve seat – extra each – remove and refit	12.29.80

[CAUTION: Please read the instructions thoroughly before you attempt cylinder head repairs. If you lack the necessary skills or tools we suggest you leave this work to an Authorized Dealer or other qualified shop. Before taking a removed cylinder head in for repair, thoroughly clean its exterior but do not undertake any disassembly.]

Special tools: S60A, 18G 106

continued

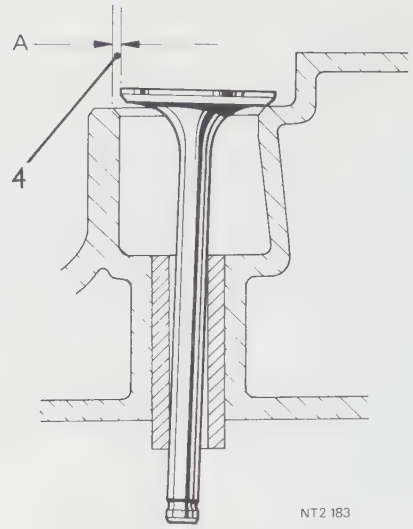

Removing

1. Remove the cylinder head. 12.29.10.
2. Remove the spark plugs.
3. Using a valve spring compressor, remove the inlet and exhaust valves, and springs and identify for reassembly.

Valve guides

4. Check the inlet and exhaust valve guides for wear. Insert a new valve in each guide in turn and tilt the valve diametrically. If movement across the valve seat—dimension (A)—exceeds 0.20 in (0.508 mm), the valve guide should be renewed.
5. The renewal of valve guides is best carried out using special tool 60A with the appropriate adaptor, to ensure the correct height of the guide above the cylinder head dimension B—see Data. Assemble the new valve guide in the tool with the chamfered end leading. Position the tool on the combustion chamber face and draw the new guide into position whilst withdrawing the old one.

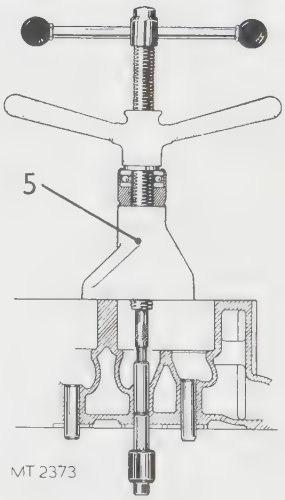

Valves

6. Examine the valves and discard any with worn or bent stems and badly pitted or burnt heads. Valves that have the head thickness reduced to $\frac{1}{32}$ in (0.9 mm) dimension (A), should be discarded. Valves in an otherwise satisfactory condition may be refaced.

Valve springs

7. Examine valve springs for cracks and distortion. Check the springs for free and load length against the information in Data. Discard any springs that do not meet the required standard.

   Note: U.K. and European specification engines are fitted with double valve springs.

continued

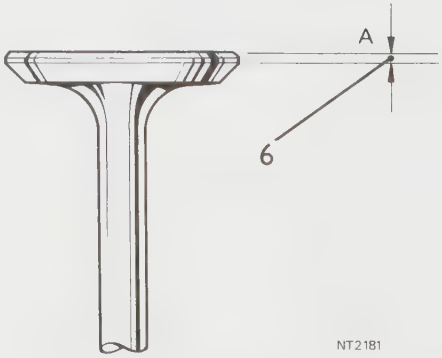

Valve seats

8. Check valve seats for wear, pits, scores and pocketing. Reface where necessary removing only the minimum of material to ensure a gas tight seal and a correctly seating valve.
   A Correctly seating valve.
   B Incorrectly seating valve.
9. If it has been necessary to remove more material than desirable, a 15° cutter may be used to reduce the width of the seating.

   CAUTION: It is important to ensure that when using this cutter that the dimension 'C', representing the boring out dimensions for the fitting of valve seat inserts (see Data), is not exceeded otherwise it may render the cylinder head useless for the fitting of inserts at a later date.

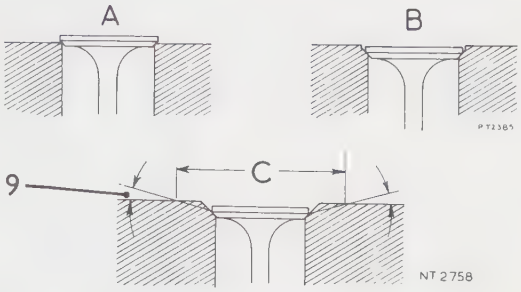

Valve seat inserts

10. Where valve seats cannot be restored by machining, valve seat inserts may be fitted, In instances where a valve seat insert is already fitted and requires renewing the old insert should be ground away until thin enough to be cracked and levered out. Care, however, should be used to avoid damaging the insert pocket during this operation otherwise difficulty may be encountered in fitting the new insert.
11. Machine the cylinder head to the appropriate dimensions given in Data. Remove burrs and swarf and carefully press the insert squarely into the cylinder head. Secure the insert by peening over the surrounding cylinder head material.
12. Machine the fitted inserts to 89° total inclusive angle concentric with the valve guide bore until the correct depth of chamfer is obtained – see DATA.

continued

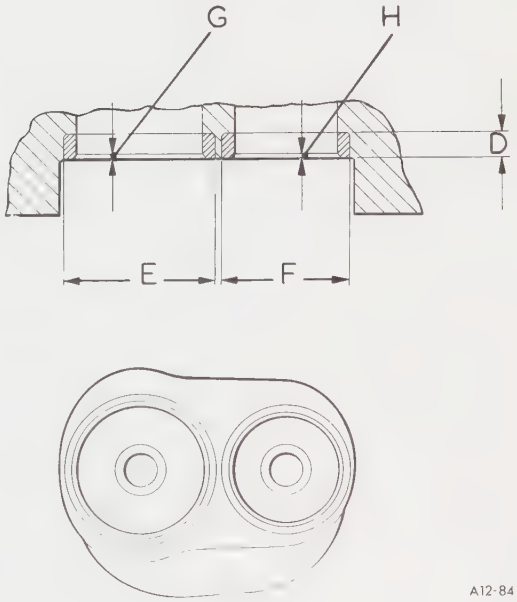

Grinding in valves

13. Use coarse followed by fine carborundum paste to lap-in the valves. Employ the diabalo action until a continuous narrow line is obtained on the valve seating.
14. Clean off all traces of grinding compound from the valve and seating. Smear a small quantity of engineers' blue on the seating and revolve the valve against its seating about ¼ in (6 mm) in both directions. A good seal is indicated by a continuous band of marking on the valve and its seat.
15. After lapping-in, identify each valve for reassembly to its respective seating.
16. Lubricate the valve-stems with clean engine oil and fit them to the cylinder head.
17. Assemble the inlet and exhaust valve springs and collets to the cylinder head using the valve spring compressor. Secure the assemblies with the split collets – Illustration A.

    NOTE: UK and European engine specifications employ double valve springs – Illustration B.
18. Refit the spark plugs.
19. Refit the cylinder head. 19.29.10.

continued

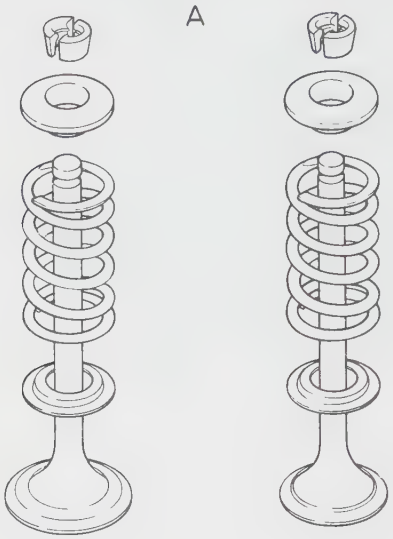

DATA

Valves (European and U.K.)	**Inlet**	**Exhaust**
Head diameter	1.375 – 1.385 in (34.97 – 35.01 mm)	1.168 – 1.172 in (29.66 – 29.76 mm)
Stem diameter	0.3107 – 0.3113 in (8.05 – 8.12 mm)	0.3100 – 0.3106 in (7.874 – 7.887 mm)
Overall length	4.234 – 4.262 in (107.54 – 108.25 mm)	4.243 – 4.253 in (107.77 – 108.02 mm)
Seat face angle	90° included angle	90° included angle
Valves (U.S.A. Catalytic and non Catalytic Converter specification)		
Head diameter (stellite seat)	1.375 – 1.385 in (34.97 – 35.01 mm)	1.168 – 1.172 in (29.66 – 29.76 mm)
Stem diameter (stellite tipped)	0.3107 – 0.3113 in (8.05 – 8.12 mm)	0.3100 – 0.3105 in (7.874 – 7.887 mm)
Overall length	4.234 – 4.262 in (107.54 – 108.25 mm)	4.240 – 4.255 in (107.70 – 108.07 mm)
Seat face angle	90° included angle	90° included angle

Valve Springs (U.K. and European)

Outer Spring

Wire diameter	0.152 in (3.86 mm)
Inside diameter of coils	0.795 in (20.19 mm)
Hand of spiral	Left
Number of working coils	3¾
Free length	1.52 in (38.60 mm)
Solid length	0.875 in (22.23 mm)
Fitted length	1.342 in (1.29 mm)

Inner Spring – From Engine number FM 29421

Wire diameter	0.092 in (2.33 mm)
Inside diameter of coils	0.578 in (14.68 mm)
Hand of spiral	Right
Number of working coils	4
Free length	1.14 in (28.95 mm)
Solid length	0.552 in (14.02 mm)
Fitted length	1.010 in (0.254 mm)

Valve Springs (U.S.A. Catalytic and non Catalytic Converter specification)

Data information as for U.K. and European outer spring.
(Single valve springs fitted to these engine specifications.)

continued

DATA – continued

Valve Seat Inserts (U.K., European and U.S.A. non Catalytic Converter specification)

	Inlet	Exhaust
Outside diameter	1.487 – 1.488 in (37.76 – 37.79 mm)	1.252 – 1.253 in (31.80 – 31.82 mm)
Inside diameter	1.2525 – 1.2575 in) (31.80 – 31.927 mm)	1.0312 – 1.0362 in (26.187 – 26.314 mm)
Width	0.248 – 0.250 in (6.29 – 6.35 mm)	0.248 – 0.250 in (6.29 – 6.35 mm)
Bore into cylinder head dimension D	0.250 – 0.255 in (6.35 – 6.48 mm)	0.250 – 0.255 in (6.35 – 6.48 mm)
Bore out cylinder head	1.484 – 1.485 in (37.69 – 37.71 mm) dimension E	1.249 – 1.250 in (37.72 – 37.75 mm) dimension F
Machine valve seats	0.040 – 0.045 in 1.016 – 1.143 mm)	0.050 – 0.055 in (1.270 – 1.397 mm)
Concentric with valve guide, to within 0.002 in (0.051 mm) T.I.R.	at 89° inclusive angle dimension G	at 89° inclusive angle dimension H

Valve Seat Inserts (U.S.A. Catalytic Converter specification)

	Inlet	Exhaust
Outside diameter	1.492 – 1.493 in (37.89 – 37.92 mm)	1.257 – 1.258 in (31.67 – 31.95 mm)
Inside diameter	1.2525 – 1.2575 in (31.80 – 31.927 mm)	1.0312 – 1.0362 in (26.187 – 26.314 mm)
Width	0.258 – 0.260 in (31.95 – 31.00 mm)	0.258 – 0.260 in (31.95 – 31.00 mm)
Bore into cylinder head dimension D	0.260 – 0.265 in (32.00 – 32.13 mm)	0.260 – 0.265 in (32.00 – 32.13 mm)
Bore-out cylinder head	1.489 – 1.490 in (32.74 – 37.84 mm) dimension E	1.254 – 1.255 in (31.85 – 31.87 mm) dimension F
Machine valve seats	0.040 – 0.045 in (1.016 – 1.143 mm)	0.050 – 0.055 in (1.270 – 1.397 mm)
Concentric with valve guide to within 0.002 in (0.051 mm) T.I.R.	at 89° inclusive angle dimension G	at 89° inclusive angle dimension H

DATA – continued

Valve Guides (U.K., European and U.S.A. non Catalytic Converter specification)

	Inlet	Exhaust
External diameter	0.5015 – 0.5020 in (12.72 – 12.75 mm)	0.5015 – 0.5020 in (12.72 – 12.75 mm)
Internal diameter	0.312 - 0.313 in (7.92 – 7.95 mm)	0.312 – 0.313 in (7.92 – 7.95 mm)
Length	2.06 in (52.32 mm)	2.06 in (52.32 mm)
Height of guide above cylinder head	0.749 – 0.751 in (19.025 – 19.075 mm)	0.749 – 0.751 in (19.025 – 19.075 mm)
Valve stem to valve guide clearance	0.0008 – 0.0023 in (0.02 – 0.06 mm)	(0.0015 – 0.0030 in (0.03 – 0.07 mm)

Valve Guides (U.S.A. Catalytic Converter specification)

	Inlet	Exhaust
External diameter	0.5015 – 0.5020 in (12.72 – 12.75 mm)	0.5015 – 0.5020 in (12.72 – 12.75 mm)
Internal diameter	0.281 in (7.137 mm)	0.281 in (7.137 mm)
Ream when fitted to	0.312 – 0.313 in (7.92 – 7.95 mm)	0.312 – 0.313 in (7.92 – 7.95 mm)
Length	2.06 in (52.39 mm)	2.06 in (52.39 mm)
Height of guide above cylinder head	0.749 – 0.751 in (19.025 – 19.075 mm)	0.749 – 0.751 in (19.025 – 19.075 mm)
Valve stem to valve guide clearance	0.0008 – 0.0023 in (0.02 – 0.06 mm)	0.0015 – 0.0030 in (0.03 – 0.07 mm)

DECARBONIZE, REFACE ALL VALVES AND SEATS, GRIND-IN VALVES, TUNE ENGINE

12.29.21

Dismantling

1. Remove the cylinder head. 12.29.10.
2. Remove the inlet and exhaust valves. 12.29.62.
3. Remove the carbon deposits from combustion chambers and ports.
4. Clean the face of the cylinder head, removing all traces of carbon and high spots.
5. Clean out the water-ways.
6. Reface all seats, removing the minimum of material.
7. Clean carbon from all valves and re-face.
8. Lap-in the valves, using coarse followed by fine grinding paste until a gas-tight joint is obtained. Do not mix the valves. 12.29.18.
9. Turn the crankshaft until Nos. 1 and 4 pistons are at T.D.C.
10. Fill Nos. 2 and 3 cylinders with clean non-fluffy rag to prevent carbon falling into the bores, and cover the cam follower apertures.
11. Carefully, without scoring the piston crown, remove carbon deposits leaving a band of carbon round the periphery of the piston crown. Avoid carbon particles falling into the cylinder block water-ways.
12. Repeat instructions 9 to 11 on Nos. 2 and 3 cylinder.
13. Clean the cylinder block face, removing all traces of carbon and high spots

Reassembling

14. Reverse instructions 1 and 2.

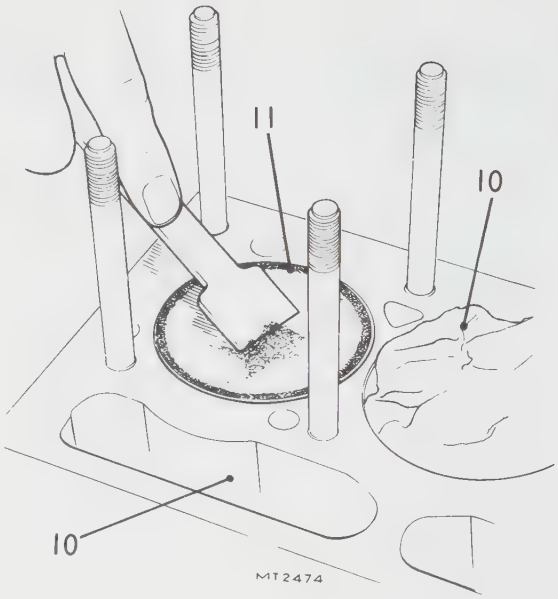

[**NOTE:** In removing carbon from the pistons, you can easily avoid scoring the piston crown by using a wooden or plastic scraper. To prevent distortion, tighten the cylinder head nuts to 38 to 45 lbf. ft (5.2 to 6.2 kgf.m) in the sequence given in 12.29.27.]

CYLINDER HEAD NUTS

– Tighten 12.29.27

1. Remove the rocker cover. 12.29.42.
2. Remove the rocker shaft. 12.29.54.
3. To avoid distortion, tighten the cylinder head nuts to the correct torque figure (see section 06) in the following sequence A, B, C, D, E, F, G, H, I, J.
4. Refit the rocker shaft. 12.29.54.
5. Refit the rocker cover. 12.29.42.

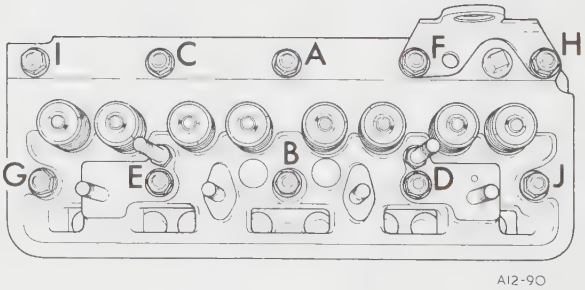

ROCKER COVER

– Remove and refit 12.29.42

Removing

1. Remove the engine breather pipe from the rocker cover.
2. Release the throttle cable from the clips on the rocker cover (U.S.A. Catalytic Converter specification only).
3. Remove the rocker cover two retaining nuts plain and fibre washers.
4. Release the air manifold support strap (U.S.A. Catalytic and non Catalytic converter specification).
5. Remove the throttle cable retaining clips (U.S.A. Catalytic converter specification only).
6. Lift off the rocker cover.
7. Remove the gasket.

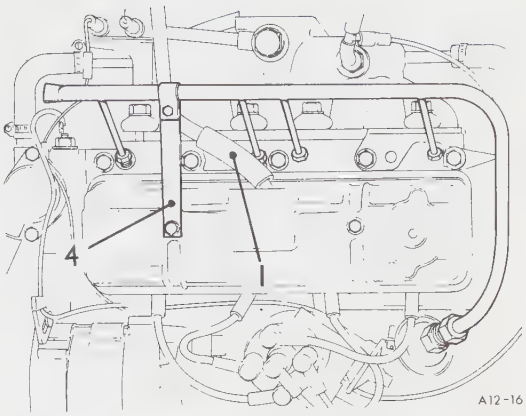

Refitting

8. Clean the rocker cover and cylinder mating faces.
9. Using a new gasket fit the rocker cover.
10. Fit the fibre washers.
11. Reverse instructions 1 to 5 ensuring that the retaining nuts are evenly tightened to the correct torque figure to avoid distortion – see section 06.

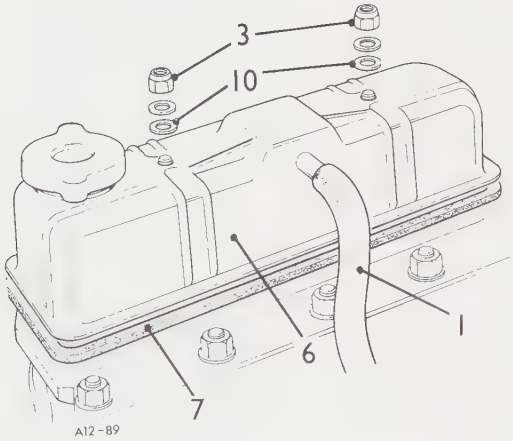

VALVE CLEARANCE

– Check and adjust **12.29.48**

1. Isolate the battery.
2. Remove the rocker cover. 12.29.42.
3. Remove the spark plugs.
4. Commencing at the front of the engine, turn the crankshaft until No. 8 and 6 valves are open, i.e. the valve springs fully compressed.
5. Using a 0.010 in (0.25 mm) feeler gauge, check the gap between the rocker pad and valve tip of No. 1 and 3 valves.
6. If adjustment is required, insert a screwdriver blade into the slot in the adjustment pin, slacken the locknut and turn clockwise to decrease and anti-clockwise to increase the gap. Tighten the locknut.
7. Check and adjust the remaining valve clearances in the following sequence:
   Adjust Nos. 5 and 2 valves with Nos. 4 and 7 valves open.
   Adjust Nos. 8 and 6 valves with Nos. 1 and 3 valves open.
   Adjust Nos. 4 and 7 valves with Nos. 5 and 2 valves open.

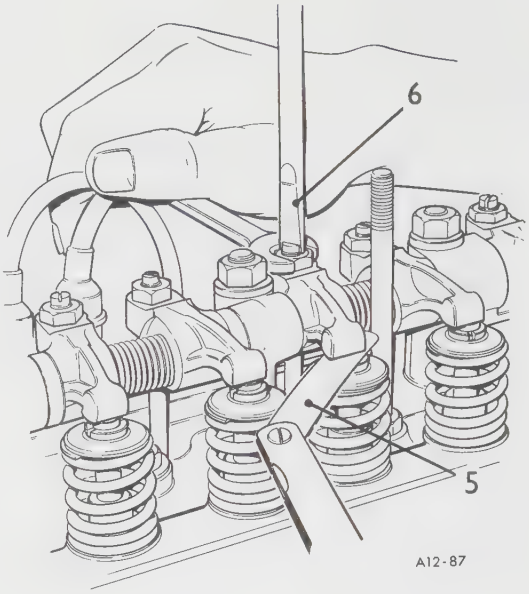

Refitting

8. Reverse instructions 1 to 3.

ROCKER SHAFT

– Remove and refit **12.29.54**

Removing

1. Remove the rocker cover. 12.29.42.
2. Remove the four nuts complete with washers securing the rocker shaft pedestals to the cylinder head.
3. Lift off the rocker shaft.

Refitting

4. Reverse instructions 1 to 3, ensuring that:
   a. The rocker adjustment screws are located correctly in the push-rod cups.
   b. The pedestal nuts are tightened evenly to the correct torque – see Section 06.
5. Adjust the valve clearances. 12.29.48.

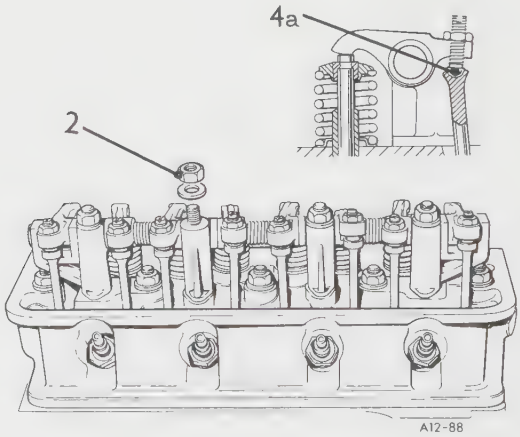

ROCKER SHAFT ASSEMBLY

– Overhaul 12.29.55

1. Remove the rocker shaft. 12.29.42.
2. Withdraw the split pin from the front end of the rocker shaft.
3. Slide off the rockers, pedestals, springs and spacers from the front end of the shaft, noting the order for reassembly.
4. Remove the screw locating the rear pedestal to the shaft.
5. Withdraw the rear pedestal and rocker.

Reassembling

6. Reverse instructions 1 to 5, ensuring:
   a. All worn components are renewed. The grinding of worn rocker pads is not recommended.
   b. Oil ways in rockers and shaft are clear.
   c. That the rear pedestal locating screw engages properly in the rocker shaft.
7. Adjust the valve clearances. 12.29.48.

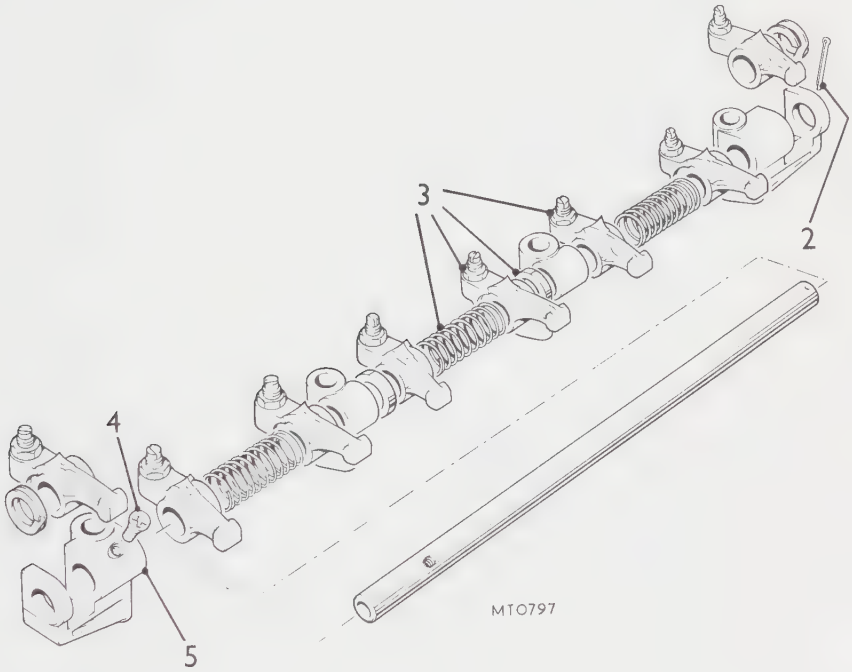

ROCKER ADJUSTING SCREWS–SET

– Remove and refit 12.29.56

Removing

1. Remove the rocker shaft assembly. 12.29.54.
2. Remove the rocker adjusting screw locknuts.
3. Remove the rocker adjusting screws.

Refitting

4. Reverse instructions 1 to 3.
5. Adjust the valve clearances. 12.29.48.

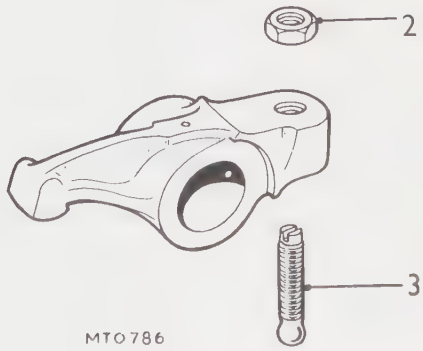

CAM FOLLOWERS–SET

– Remove and refit 12.29.57

[**NOTE:** Used cam followers should never be interchanged. The best way to identify them for reassembly is to wipe dry each follower as you remove it. Then use waterproof ink or a waterproof felt-tipped marker to write an identification number on the follower. During reassembly, many experienced mechanics prefer to lubricate the cam followers lightly with assembly lubricant (available from automotive supply stores) or with a thin coat of multipurpose grease.]

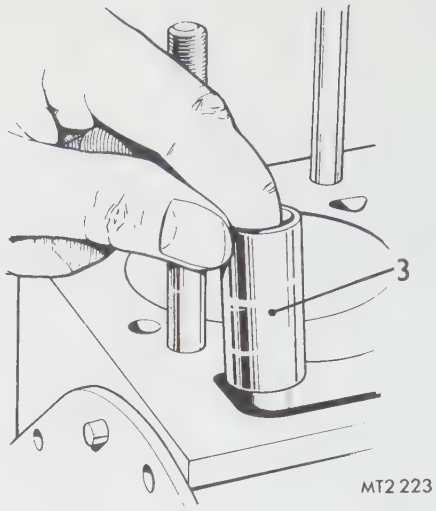

Removing

1. Remove the cylinder head. 12.29.10.
2. Remove the push rods. 12.29.59.
3. Lift out the eight cam followers and identify for reassembly.

Refitting

4. Reverse instructions 1 to 3, ensuring:
   a. Worn or pitted cam followers are renewed.
   b. Each follower is free to rotate and slide in its locating bore.
5. Adjust the valve clearances. 12.29.48.

PUSH RODS–SET

– Remove and refit 12.29.59

[**NOTE:** Used pushrods should never be interchanged. A convenient way to keep pushrods in order is to push them through a piece of cardboard in which you have punched eight holes. If necessary, you can number the holes to identify the location of each pushrod in the engine.]

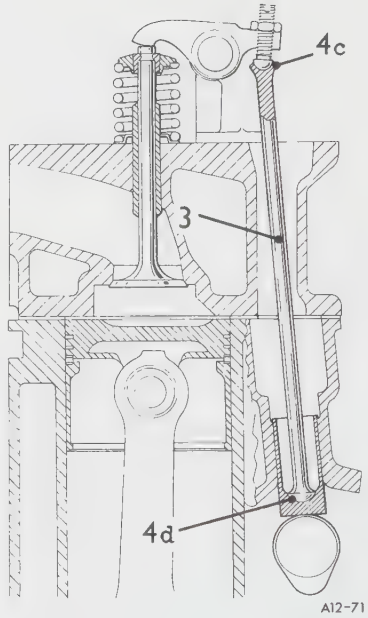

Removing

1. Remove the rocker cover. 12.29.42.
2. Remove the rocker shaft assembly. 12.29.54.
3. Lift out the push rods, identifying them for reassembly.

Refitting

4. Reverse instructions 1 to 3, ensuring:
   a. Push rods with worn or pitted cup and ball ends and bent shafts are renewed.
   b. Ball and cup ends are lubricated.
   c. Cup ends are located correctly in the rocker adjusting screw ball.
   d. The ball ends are seated properly in the cam follower.
5. Adjust the valve clearances. 12.29.48.

Valves – inlet and exhaust – remove and refit	12.29.62
Valves – inlet – remove and refit	12.29.63
Valves – exhaust – remove and refit	12.29.64

The above operations are included in 12.29.18.

VALVE SPRINGS

– Inlet and exhaust – remove and refit	12.29.65
– Inlet – remove and refit	12.29.66
– Exhaust – remove and refit	12.29.67
– Inlet – extra each – remove and refit	12.29.68
– Exhaust – extra each – remove and refit	12.29.69

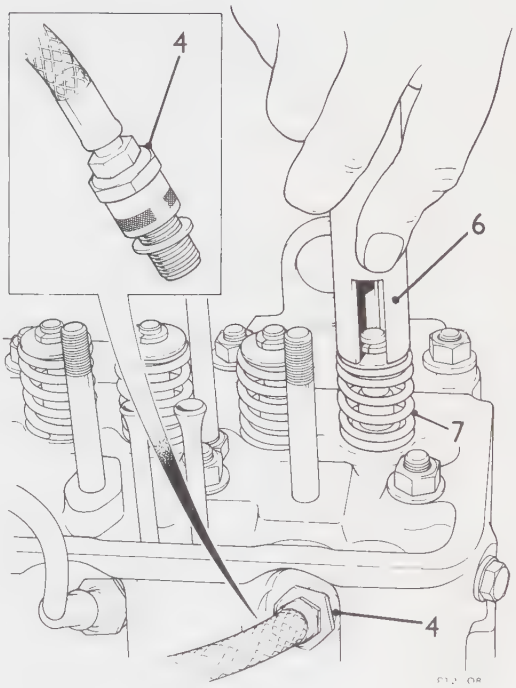

Removing

1. Remove the rocker cover. 12.29.42.
2. Remove the rocker shaft. 12.29.54.
3. Remove the spark plug on the appropriate cylinder.
4. Fit an air line adaptor to the spark plug hole.

   NOTE: This adaptor can be made from a discarded spark plug if desired.
5. Pressurise the combustion chamber.
6. Using a suitable tool depress the valve spring and remove the split collets.
7. Remove and discard the valve spring.

Refitting

8. Reverse instructions 1 to 8.

Valve guide – inlet – remove and refit	12.29.70
Valve guide – exhaust – remove and refit	12.29.71
Valve guide – inlet – extra each	12.29.72
Valve guide – exhaust – extra each	12.29.73
Inlet valve seat – remove and refit	12.29.76
Exhaust valve seat – remove and refit	12.29.77
Inlet valve seat – extra each – remove and refit	12.29.79
Exhaust valve seat – extra each – remove and refit	12.29.80

The above operations are included in 12.29.18.

ENGINE AND GEARBOX ASSEMBLY

– **Remove and refit** 12.37.01

Removing

1. Disconnect the battery.
2. Remove the radiator. 26.40.01.
3. Remove the air cleaner. 19.10.01.
4. Remove the L.H. side engine valance.
5. Remove the R.H. side engine valance.
6. Disconnect the emission pipes (U.S.A. Catalytic and non Catalytic converter specification).
7. Disconnect the exhaust pipe from the exhaust manifold flange (U.S.A. non Catalytic converter specification and U.K. models). 30.10.26.
8. Disconnect the Catalytic converter from the exhaust manifold (U.S.A. Catalytic converter specification only). 17.50.01.
9. Disconnect at the engine, the heater inlet and outlet hoses.
10. Disconnect the throttle cable. 19.20.06.
11. Disconnect the mixture control cable 12.20.13 (except U.S.A. Catalytic converter specification models with auto choke).
12. Disconnect the electrical leads to:
    a. the alternator.
    b. the distributor. (L.T. leads.)
    c. water temperature transmitter wire.
    d. oil pressure switch.
13. Disconnect the fuel pipe at the pump and clamp the hose.
14. Disconnect the electrical cable from the starter motor.
15. Disconnect the H.T. lead to the distributor at the coil.
16. Release the exhaust front pipe from its gearbox support bracket.

continued

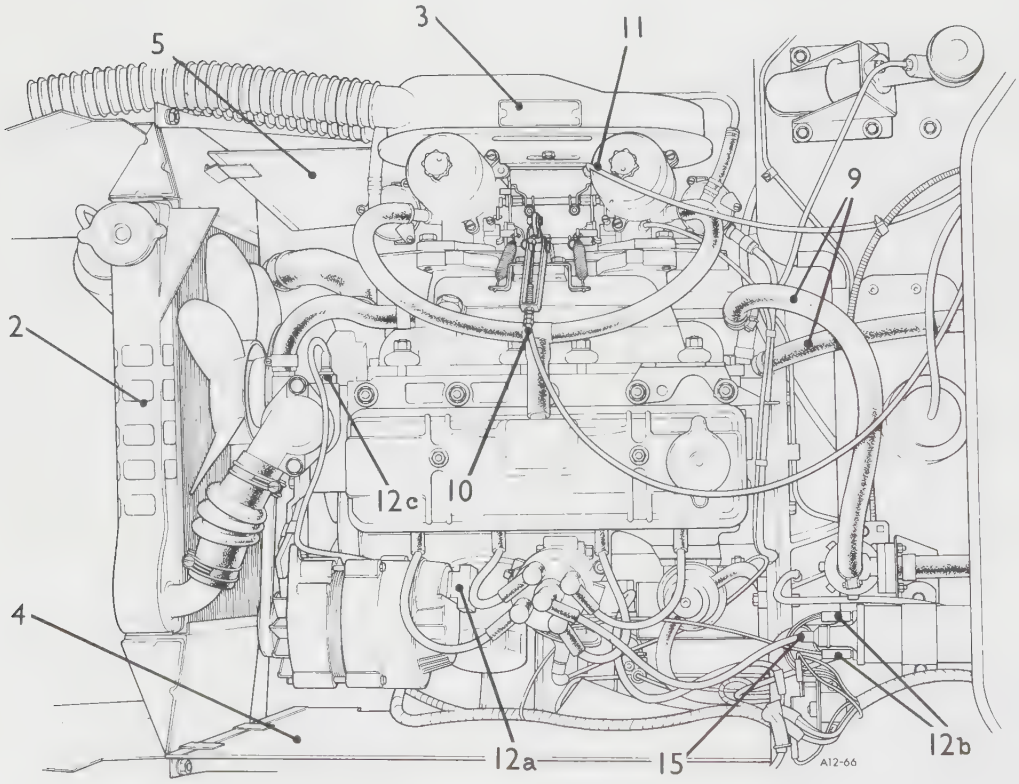

U.K. and European Specification

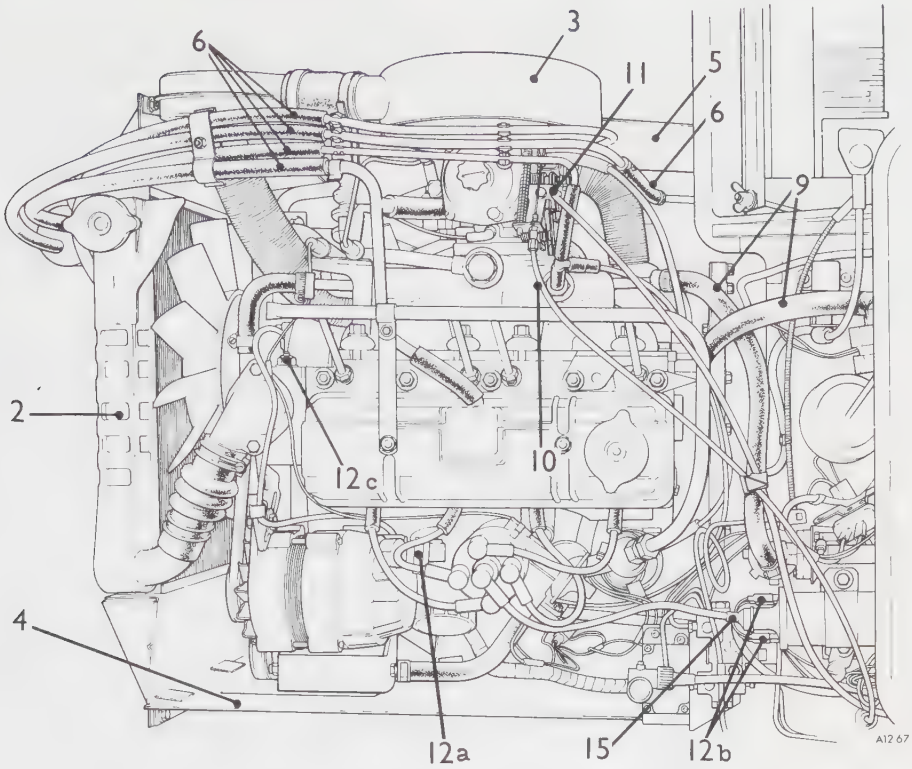

U.S.A. Non Catalytic Converter Specification

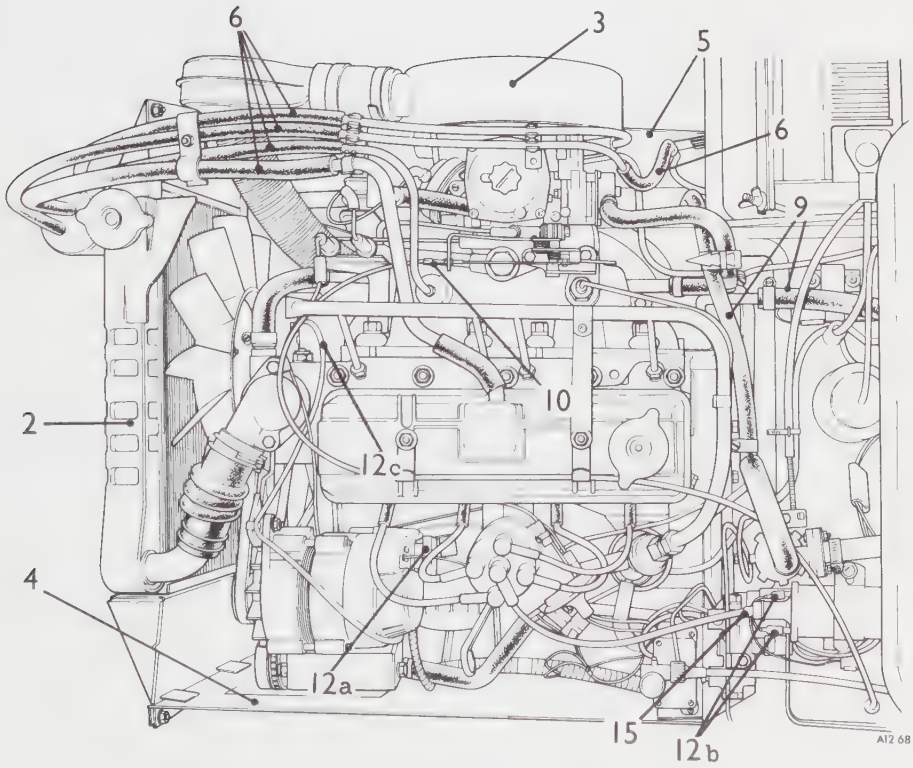

U.S.A. Catalytic Converter Specification

17. Disconnect the engine restraint cable (U.S.A. only).
18. Remove the gearbox tunnel cover. 76.25.07.
19. Mark relationship for reassembly and disconnect the propeller shaft from the transmission. 47.15.02.
20. Release the speedometer cable from the gearbox.
21. Disconnect the two electrical leads to the gearbox reverse light switch or three leads if an overdrive is fitted.
22. Remove the clutch slave cylinder and secure it to one side to prevent damage.
23. Remove the two nuts (one each side) securing the gearbox rubber mounting to the mounting bracket.
24. Attach lifting equipment to the engine lifting eyes and hoist sufficiently to just take the weight of the engine.
25. Remove the four nuts and bolts (two each side) securing the engine front mounting rubbers to the chassis.
26. Commence to hoist the engine and gearbox and check before proceeding further that all connections to the chassis or body from the engine and gearbox and overdrive are disconnected.
27. Continue to hoist and manoeuvre the unit clear of the car.

continued

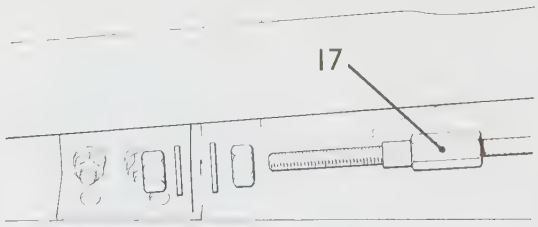

A12–79

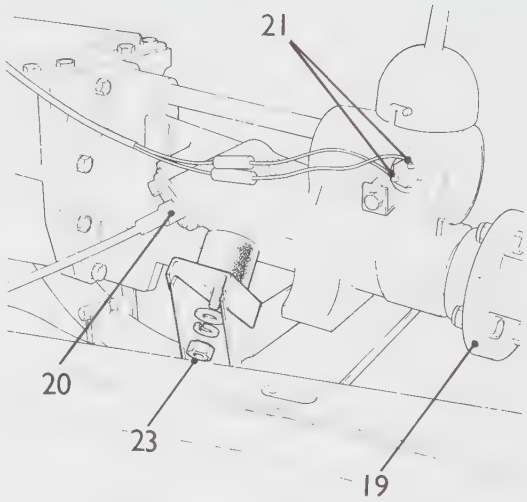

A12–78

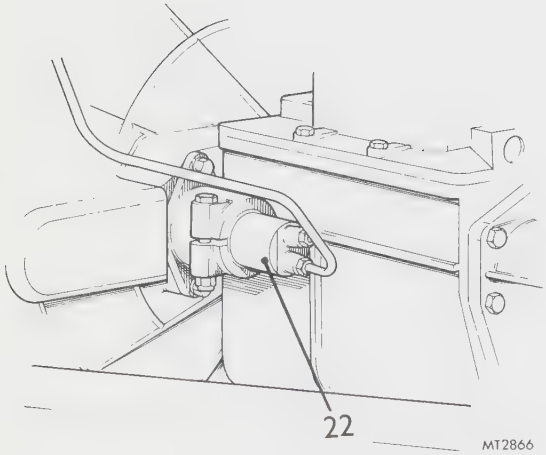

MT2866

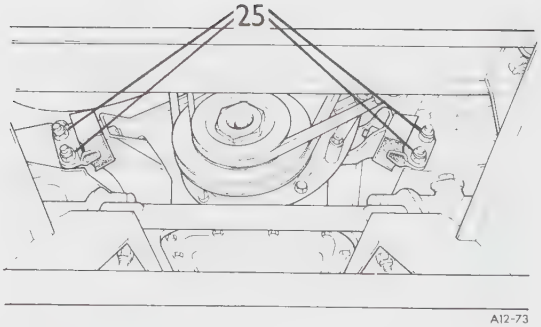

A12-73

Refitting

28. Attach lifting equipment to the engine lifting eyes.
29. Hoist the engine and gearbox unit and manoeuvre into position in the chassis.
30. Fit the engine front mounting rubbers to the chassis.
31. Fit the engine – gearbox rear mountings.
32. Remove the lifting equipment.
33. Fit the speedometer cable to the gearbox.
34. Connect the propeller shaft to the transmission lining up the marks.
35. Fit the clutch slave cylinder.
36. Fit the gearbox tunnel cover. 76.25.07.
37. Fit the exhaust pipe to the exhaust manifold flange on the Catalytic converter. 30.10.26 or 17.50.01.
38. Fit the engine restraint cable and adjust. 12.45.19.
39. Attach the exhaust front pipe to its support bracket on the gearbox.
40. Reverse instructions 10 to 15.
41. Connect the heater to:
    a. inlet hose
    b. outlet hose
42. Fit the radiator. 26.40.01.
43. Fit the L.H. and R.H. engine valances.
44. Fit the air cleaner. 19.10.01.
45. Connect-up the emission control pipes (U.S.A. Catalytic and non Catalytic converter specification). 17.00.02.
46. Connect the two or three electrical leads to the gearbox and or overdrive – see instruction 20.
47. Check and if necessary fill the sump with oil of a recommended grade to the high mark on the dipstick.
48. Check and if necessary top-up the gearbox oil level.
49. Check that no wires or pipes are trapped between engine and chassis.
50. Fill the cooling system. 26.10.01.
51. Connect the battery.
52. Start and run the engine and check for oil and coolant leaks.
53. Road test car checking that all systems, indicators and instruments are functioning correctly.

ENGINE ASSEMBLY

– Remove and refit 12.41.01

Note: For instructions 1 to 15 use the engine bay illustrations in operation 12.41.01.

Removing

1. Disconnect the battery.
2. Drain and remove the radiator. 26.40.01.
3. Drain the cylinder block and refit the plug.
4. Remove the air cleaner. 19.10.01.
5. Remove the L.H. side engine valance.
6. Remove the R.H. side engine valance.
7. Disconnect the emission control pipes.
8. Disconnect, from the exhaust manifold:
   a. the front pipe (U.K. and U.S.A. non Catalytic converter specification). 30.10.26.
   or
   b. the Catalytic converter. 17.50.01.
9. Disconnect:
   a. the heater inlet hose from the engine.
   b. the heater outlet hose to the engine.
10. Disconnect the throttle cable. 19.20.06.
11. Disconnect the mixture control cable (U.K. and U.S.A. non Catalytic converter specification only).
12. Disconnect the electrical leads to:
    a. the alternator.
    b. the distributor.
    c. the water temperature transmitter.
    d. the oil pressure switch.
13. Remove the fuel inlet pipe to the pump.
14. Disconnect the electrical cable to the starter motor.
15. Disconnect the H.T. lead to the ignition coil.
16. Jack-up the car and lower onto axle stands.
17. Disconnect the exhaust front pipe at the gearbox and pull the pipe downward passed the engine and chassis.
18. Disconnect the engine restraint cable (U.S.A. Catalytic and non Catalytic converter specification only).
19. Remove the bell housing lower bolts and nuts.
20. Jack-up the car and remove the axle stands.
21. Place jack in support under bell housing.
22. Attach lifting equipment to the engine lifting eyes.
23. Hoist to take weight of the engine.
24. Remove the bell housing top bolts and nuts.
25. Remove the starter motor.
26. Disconnect from the chassis the engine:
    a. L.H. mounting nuts and bolts.
    b. R.H. mounting nuts and bolts.

continued

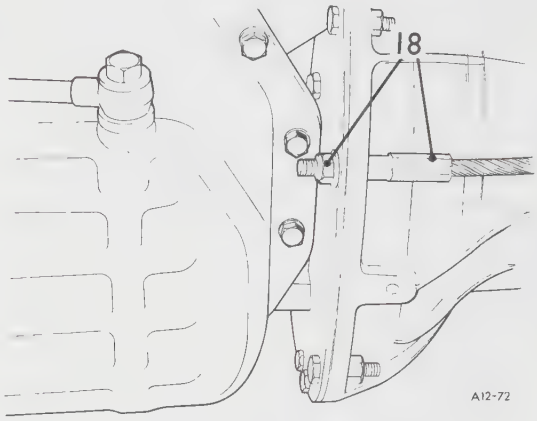

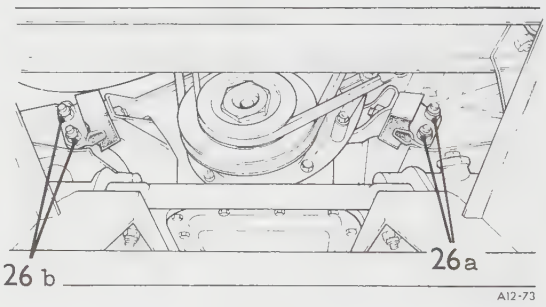

27. Check that all connections from the engine to the gearbox and chassis are disconnected.
28. Hoist the engine whilst moving the engine forward and continue raising the engine until it can be moved clear of the car, whilst ensuring that the bell housing is still supported.

Refitting

29. Using a dummy primary shaft check that the clutch centre plate is centralised.
30. Attach lifting equipment to the engine lifting eyes.
31. Hoist and lower engine into position in the chassis.
32. Line-up engine with the bell housing.
33. Move the engine rearward to engage the primary shaft with the clutch centre plate splines. This may be achieved by either turning the crankshaft or by placing the gearbox in a gear and moving the car.

    CAUTION: the latter method should only be used if a trolley jack is being employed as a support under the bell housing in such a way that movement of the car will not cause the bell housing to slip off the jack.
34. Fit the bell housing top bolts and nuts noting that the battery earth cable is attached to one – L.H. side for R.H.D. cars – R.H. side for L.H.D. cars.
35. Remove the support from the bell housing.
36. Lower the engine and attach the L.H. and R.H. engine mountings to the chassis.
37. Remove the engine lifting equipment.
38. Fit the starter motor.
39. Jack-up the car and lower onto axle stands.
40. Fit the bell housing lower bolts and nuts.
41. Fit the engine restraint cable and adjust (U.S.A. models only). 12.45.19.
42. Fit the exhaust front pipe to the gearbox bracket.
43. Remove the car from the axle stands.
44. Reverse instructions 2 to 15.
45. Check and if necessary top-up the sump with oil of a recommended grade to the high mark on the dipstick.
46. Fill the cooling system.
47. Check that no wires, cables and pipes are trapped.
48. Connect the battery and run the engine and check for oil and coolant leaks.
49. Road test the car checking the clutch and that all indicators and instruments are functioning correctly.

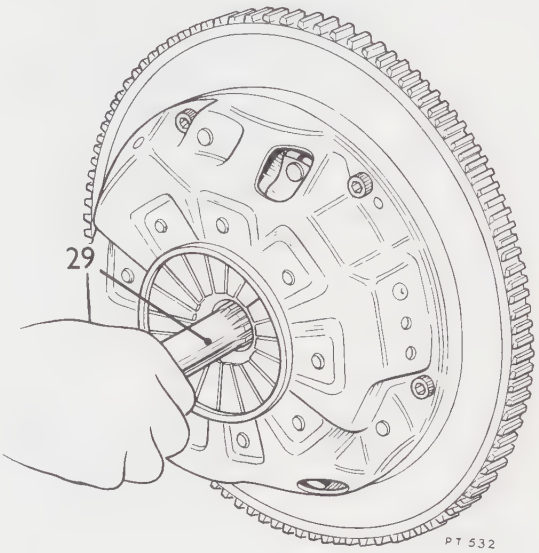

ENGINE ASSEMBLY

– Strip and rebuild 12.41.05

[CAUTION: There are many parts of the engine that must not be intermixed or that require special techniques to remove. If you are not an experienced Spitfire mechanic, please read carefully the other parts of this Manual where each specific removal task is described.]

Stripping

1. Remove the engine assembly 12.41.01 and remove the following ancillary equipment.
   Alternator and brackets
   Air pump (U.S.A. models only)
   Diverter and relief valve (U.S.A. models only)
   Air manifold and check valve (U.S.A. models only).
   The air cleaner(s)
   Carburetters(s)
   Inlet and exhaust manifolds
   Dipstick
   Distributor
   Spark plugs
   Oil filter
   Fuel pump
   Clutch assembly
   Engine mounting rubbers
   a. Water pump housing complete with thermostat housing fan, pulley drive belt and viscous coupling (U.S.A. models).
2. Remove the rocker cover.
3. Remove the rocker shaft. 12.29.54.
4. Remove the cylinder head. 12.29.10, ensuring that the nuts are released in correct sequence. 12.29.27.
5. Remove the valves and springs. 12.29.62, and identify for reassembly.
6. Remove the push-rods and identify for reassembly.
7. Withdraw the cam followers and identify for reassembly. 12.29.57.
8. Remove the crankshaft pulley.
9. Remove the timing chain cover. 12.65.01.
10. Remove the timing chain and sprockets, 12.65.12, ignoring reference to moving the crankshaft and camshaft.
11. Remove the distributor pedestal and drive gear. 12.10.22, instructions 2 to 5.
12. Remove the two bolts securing the camshaft locating plate to the cylinder block. Remove the plate and withdraw the camshaft.
13. Remove the cylinder block front mounting plate. 12.25.10, instructions 11 to 14.
14. Remove the flywheel. 12.53.07, instructions 3 and 4.
15. Remove the spigot bush from the crankshaft.
16. Remove the engine rear adaptor plate. 12.53.03.
17. Turn the cylinder block over so that the sump is uppermost.
18. Remove the bolts securing the sump to the crankcase and lift off the sump complete with gasket.

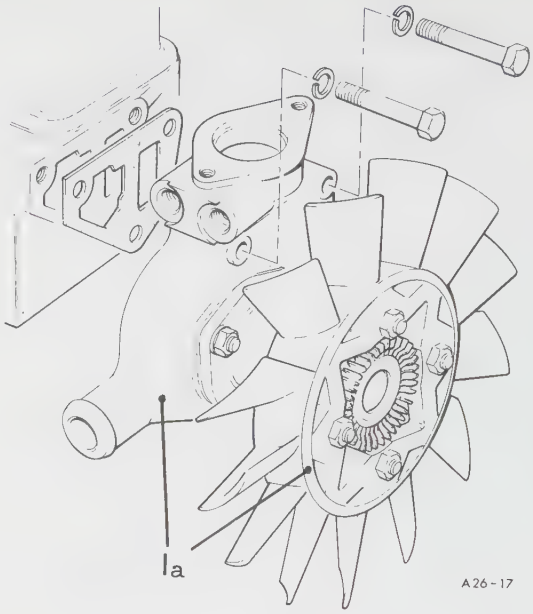

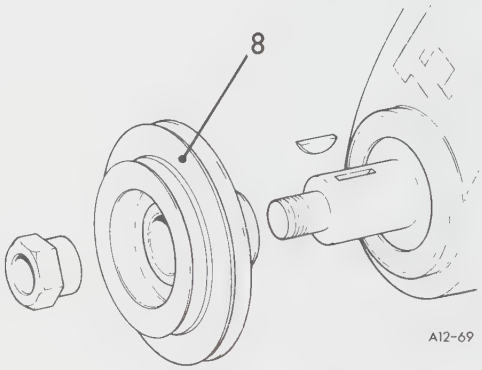

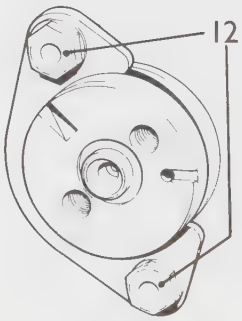

19. Remove the oil pump strainer.
20. Remove the oil pump. 12.60.26, instructions 2 and 3.
21. Remove the oil pressure relief valve. 12.60.56.
22. Remove the crankshaft rear oil seal. 12.21.20, instructions 4 and 5.
23. Remove the two screws securing the front sealing block to the crankcase, and lift out the sealing block.
24. Remove the eight big-end bolts. 12.17.01.
25. Withdraw the connecting rod bearing caps complete with lower bearing shells; DO NOT MIX. Check identification marks for reassembly. 12.17.01.
26. Push the connecting rods and pistons down the cylinder bores and remove the upper bearing shells.
27. Turn the cylinder block on its side and with care withdraw the pistons and connecting rod assemblies. Mark them for reassembly.
28. Marry-up the connecting rods and piston assemblies with their respective bearing caps and shells.
29. Remove the front and centre main bearing cap bolts.
30. Remove the rear main bearing cap bolts.
31. Withdraw the main bearing caps, complete with lower shells. Check identification marks for reassembly. DO NOT MIX.
32. Lift out the crankshaft.
33. Remove the upper bearing shells and thrust washers from the rear main bearing.

Rebuilding

Overhaul all sub-assemblies.

Clean and degrease all components before assembly. Lubricate all parts with clean engine oil before assembly unless otherwise stated.

34. Fit the main bearing shells to the crankcase, ensuring that the tags locate in the recesses.

continued

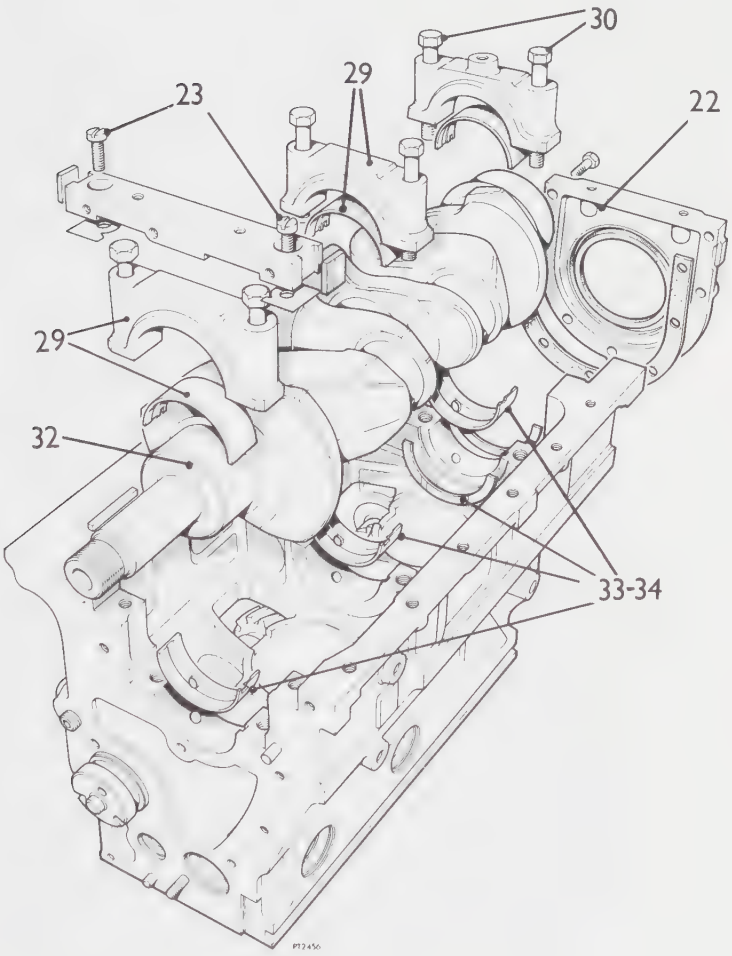

35. Check that the crankshaft oilways are clear, and lower the crankshaft into the crankcase.
36. Fit the thrust washers to the rear main bearing, ensuring that the thrust faces, identified by oil grooves, bear against the crankshaft faces and locate in the registers on both sides of the crankcase bearing bore half.
37. Fit the bearing shells to the main bearing caps, ensuring that the tags locate in the recesses.
38. Fit the centre and front main bearing caps and tighten to correct torque – see section 06.
39. Check the crankshaft end-float, as illustrated.
40. Fit the rear main bearing cap and tighten the bolts to the correct torque.
41. Fit the piston and connecting rod assemblies to the cylinder block bores. 12.17.01, instructions 14 to 21.
42. Fit the crankshaft rear oil seal. 12.21.20, instructions 6 to 11.
43. Clean the sealing block and crankcase mating faces.
44. Coat the sealing block gaskets with sealing compound.
45. Fit the gaskets to the crankcase.
46. Fit the sealing block and loosely secure with the retaining screws.
47. Finally tighten the sealing block retaining screws.
48. Smear the wedges with sealing compound and drive them into the slots.
49. Trim the protruding ends of the wedges flush with the sealing block but do not undercut.

continued

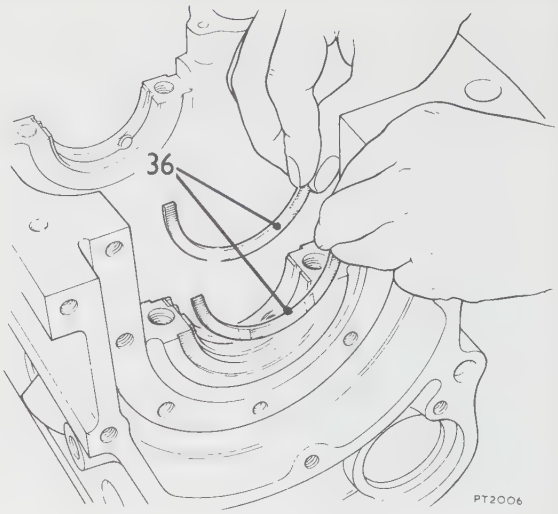

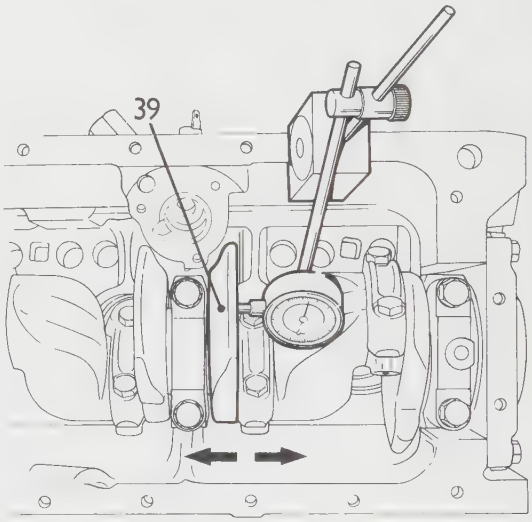

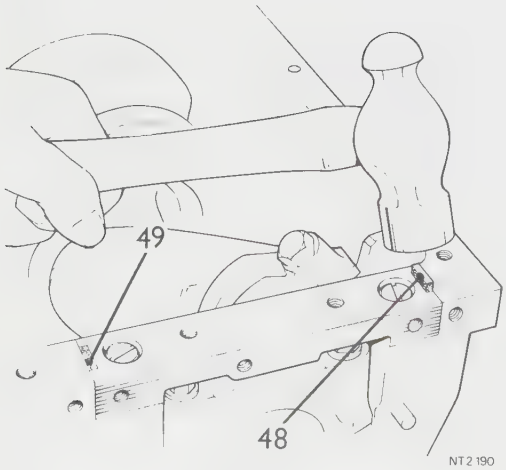

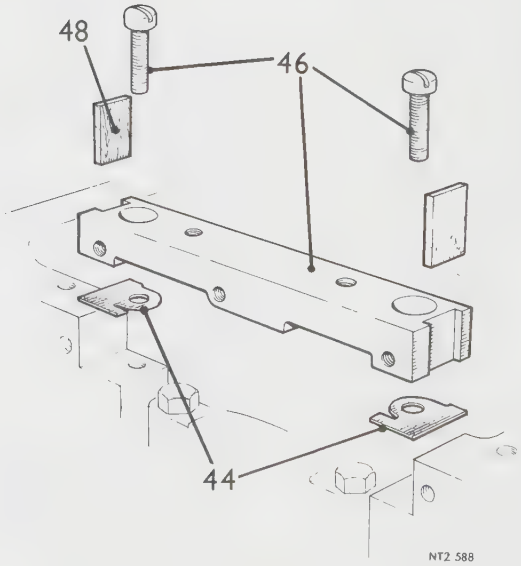

50. Fit the oil pump, ensuring that the spring washers are located under the bolt heads; tighten the bolts evenly.
51. Fit the oil strainer to the pump inlet.
52. Fit the sump with a new gasket and evenly tighten the retaining bolts.
53. Fit the oil pressure relief valve. 12.60.56.
54. Turn the cylinder block over, and secure in an upright position.
55. Fit the engine rear adaptor plate, ensuring correct location over the studs and dowels and that the arrow is at the top. Evenly tighten the retaining bolts.
56. Fit the crankshaft spigot bush, which should be a loose fit in the crankshaft. See 12.21.45.
57. Fit the flywheel 12.53.07 instructions 5 to 8.
58. Coat the cylinder block face of a new front mounting plate gasket with jointing compound and place it in position on the joint face.
59. Fit the mounting plate in position over the dowels. Secure it in position with three bolts into the cylinder block and two screws into the front sealing block.
60. Assemble the camshaft into the cylinder block, secure it in position with the camshaft location plate, and tighten retaining bolts.
61. Check the camshaft end-float which should be within 0.004 to 0.008 in (0.10 to 0.20 mm). Pull the camshaft out against the location plate and insert a feeler gauge between the groove and location plate.
62. Reduce excessive end-float by fitting a new location plate.
63. Reassemble the valves and springs to the cylinder head. 12.29.18.

continued

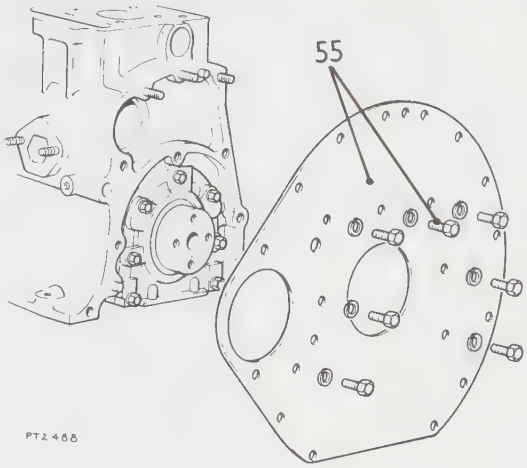

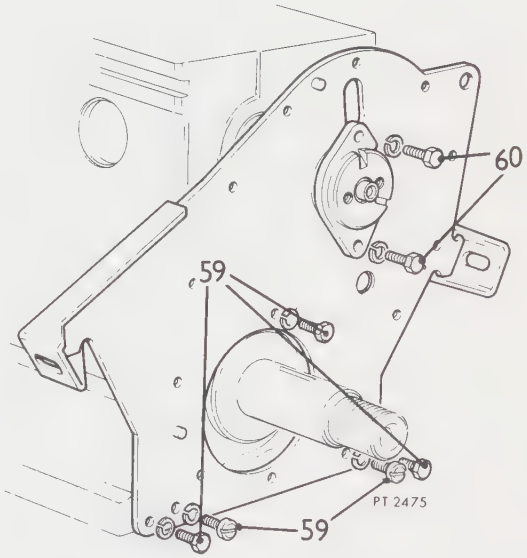

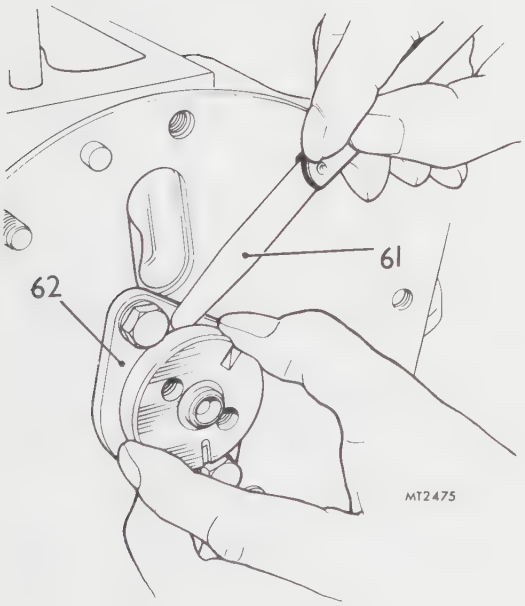

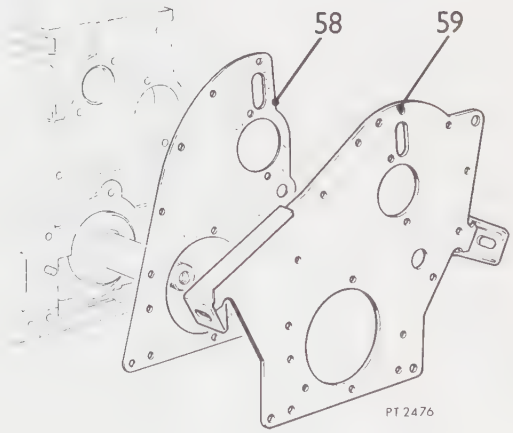

64. Fit the cam followers to the cylinder block. 12.29.57, instruction 3.
65. Rotate the crankshaft until No. 1 piston is at T.D.C. by using a dial gauge on the piston crown. **Do not move the crankshaft again until the valves have been timed.**
66. Fit the cylinder head assembly with a new gasket.
67. Tighten the retaining nuts in correct sequence and torque loading. 12.29.27.
68. Fit the push-rods, ensuring that the ball ends locate in the cam followers.
69. Fit the rocker shaft assembly, ensuring that the rocker adjusting screw balls locate in the push-rod cups.
70. Tighten the rocker shaft pedestal nuts evenly to the correct torque.
71. Adjust the valve clearances of Nos. 7 and 8 valves only to 0.080 in (2.032 mm).

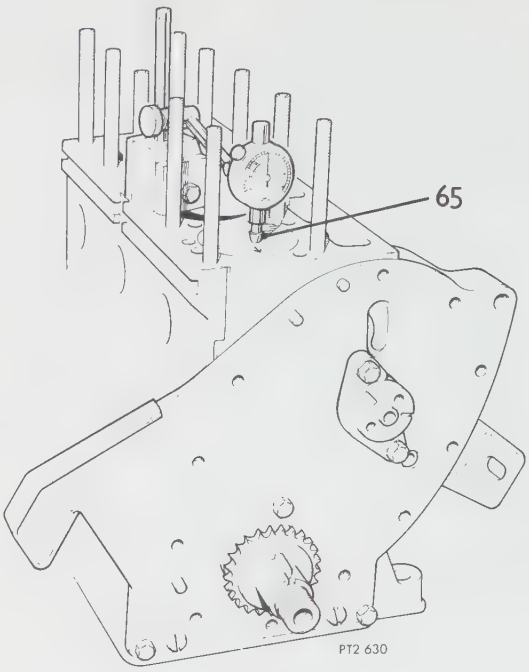

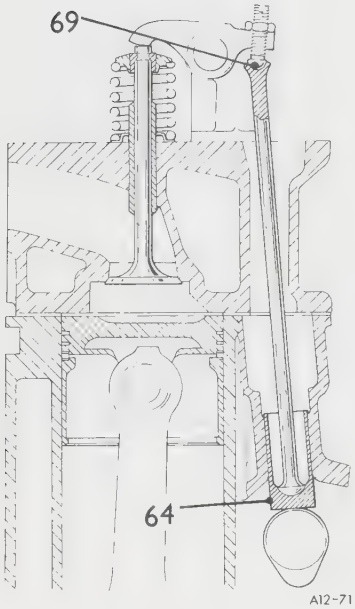

72. Turn the camshaft until Nos. 7 and 8 valves are on the 'rock', i.e. inlet valve about to open and exhaust valve about to close. This may be determined by oscillating the camshaft while measuring the rocker clearances of these two valves with feeler gauges. When the two clearances are the same, the valves and camshaft are in their correct relationship with the crankshaft.

continued

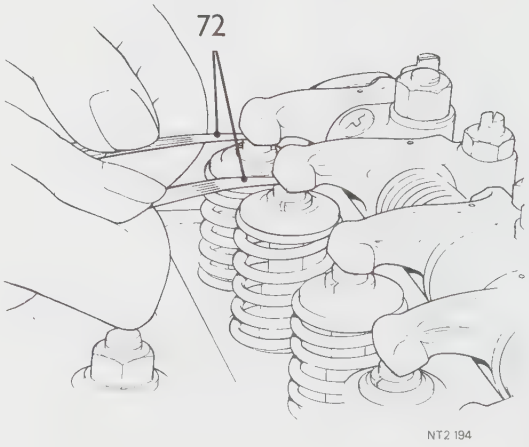

73. Encircle both sprockets with the timing chain and fit to crankshaft and camshaft respectively, keeping the chain taut on the drive side.
NOTE: The camshaft timing sprocket is provided with four holes which are equally spaced but offset from a tooth centre. Half-tooth adjustment is obtained by rotating the sprocket 90 degrees from its original position. A quarter-tooth adjustment is possible by turning the sprocket 'back to front'. By rotating the sprocket 90 degrees in this position three-quarters of a tooth variation is available—see note following instruction 19, 12.65.08.

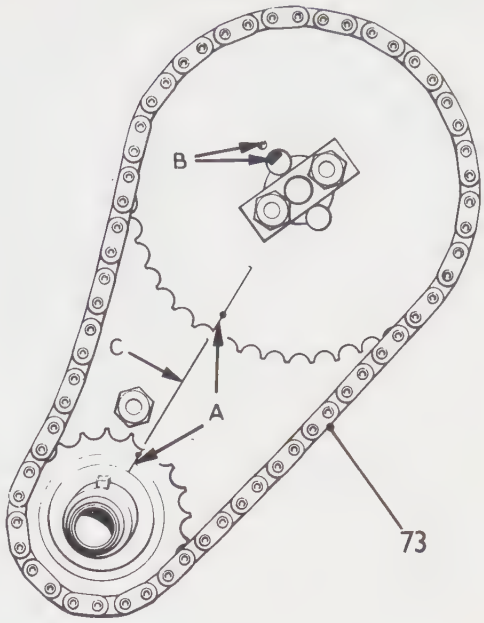

MT2280

74. If new sprockets have been fitted, make a punchmark (A) on the crankshaft and camshaft sprockets on a line (C) scribed through the diameters of the two sprockets. Make also a punch-mark (B) on the end of the camshaft through one of the sprocket holes and a corresponding punch-mark on the sprocket.

75. Check the sprockets for alignment. 12.65.12.
76. Fit a new camshaft sprocket lock plate and tighten the bolts and bend over the tabs.
77. Fit the oil thrower to the crankshaft, ensuring that the dished periphery faces the timing cover.
78. Fit the timing chain cover complete with a new gasket. 12.65.01.
79. Fit the crankshaft pulley and tighten the retaining nut to the correct torque—see Section 06.
80. Adjust all valve clearances. 12.29.48.
81. Fit the distributor drive shaft and gear. 12.10.22.
82. Fit the rocker cover.
83. Fit ancillary equipment.
84. Fit the clutch assembly.
85. Fit the engine assembly to the car.
86. Fill the oil sump with engine oil of the correct grade to the 'HIGH' mark on the dipstick, and replace the dipstick.
87. Fill the cooling system. 26.10.01, instructions 5 to 10.
88. Time the ignition. 86.35.16.
89. Tune and adjust the carburetters. 19.15.02.

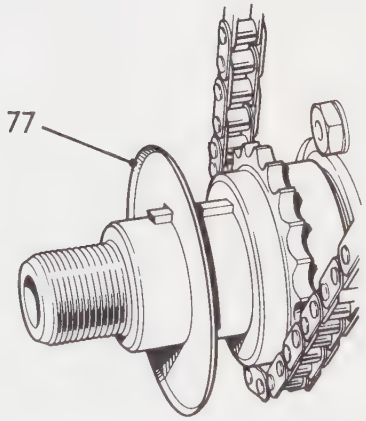

MT0226

ENGINE MOUNTINGS – FRONT

– L.H. – Remove and refit	12.45.01
– R.H. – Remove and refit	12.45.03
– Set – Remove and refit	12.45.04

Removing

1. Employ a jack or hoist to take the weight of the engine.
2. Remove the nuts and bolts securing the mounting to frame (two each side).
3. Remove the nut securing the mounting to the engine mounting plate.
4. Raise the engine slightly.
5. Remove the mounting(s).

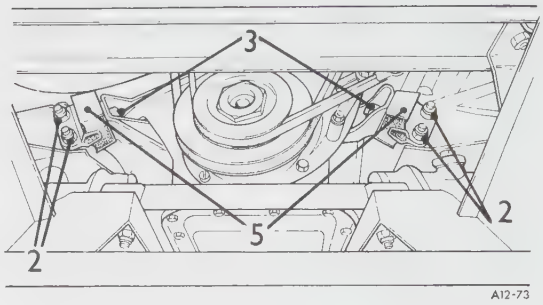

Refitting

6. Reverse instructions 1 to 5.

ENGINE MOUNTINGS – REAR

– L.H. – Remove and refit	12.45.07
– R.H. – Remove and refit	12.45.09
– Set – Remove and refit	12.45.10

Removing

1. Remove the front floor carpets. 76.49.02.
2. Remove the gearbox cover carpet. 76.49.01.
3. Remove the gearbox tunnel cover. 76.25.07.
4. Place jack under gearbox.
5. Remove the mounting nuts and washers.
6. Jack up gearbox until the mounting rubbers are clear of the support bracket.
7. Unscrew the mounting rubber.

Refitting

8. Screw the new mounting rubber in place.
9. Lower the gearbox and ensure the mounting locates in the support bracket.
10. Replace the nuts and washers.
11. Refit the gearbox tunnel cover. 76.25.07.
12. Refit gearbox cover carpet. 76.49.01.
13. Refit the front floor carpets. 76.49.02.

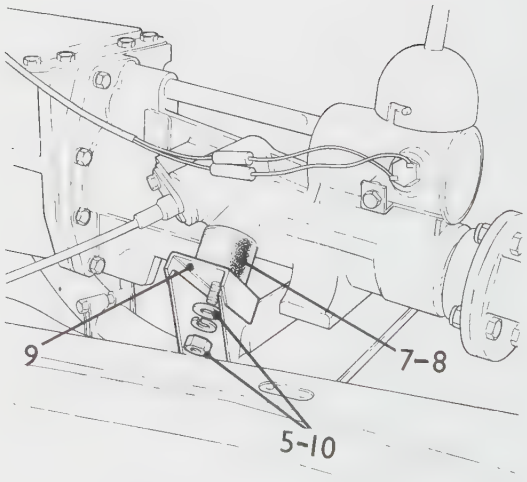

ENGINE RESTRAINT CABLE

– Remove and refit 12.45.19

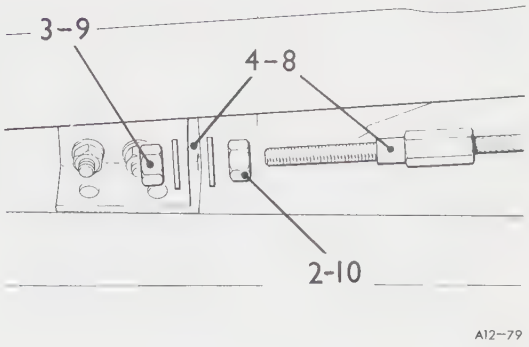

Removing

1. Raise the car on a ramp.
2. Release the locknut.
3. Remove the adjusting bolt.
4. Withdraw the cable from the bracket.
5. Remove the nut and washer securing the cable to the bell housing.
6. Remove the cable from the car.

Refitting

7. Reverse instructions 5 and 6.
8. Fit the cable to the bracket.
9. Tighten the cable adjusting nut against the bracket until the cable can be deflected approximately $\frac{1}{16}$ in (1.6 mm) at the midpoint of the run.

   Note: The object must be to remove all slackness from the cable without imposing any tension or stretch on the cable.
10. Tighten the locknut.
11. Lower the car.

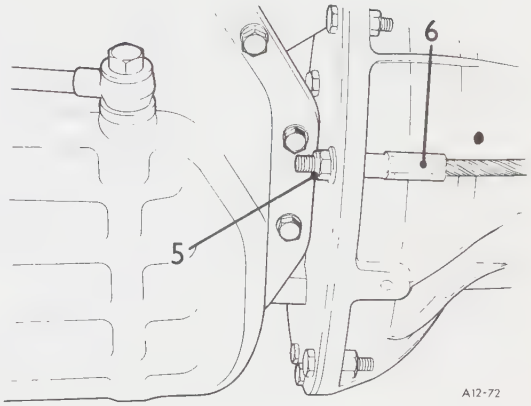

ENGINE REAR ADAPTOR PLATE

– Remove and refit 12.53.03

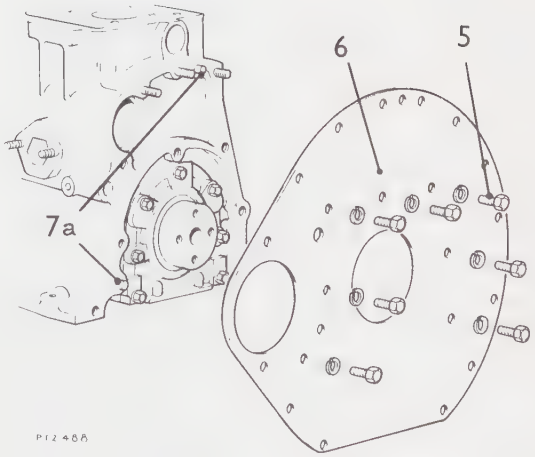

Removing

1. Disconnect the battery.
2. Remove the gearbox. 37.20.01, or engine assembly. 12.41.01.
3. Withdraw the starter motor.
4. Remove the flywheel. 12.53.07.
5. Remove the seven bolts securing the adaptor plate to the cylinder block.
6. Remove the adaptor plate.

Refitting

7. Reverse instructions 1 to 6, ensuring:
   a. The adaptor plate is located correctly over the dowel at the top and bottom of the cylinder block.
   b. The adaptor plate retaining bolts are tightened evenly to the correct torque figure–see Section 06.

FLYWHEEL

– Remove and refit 12.53.07

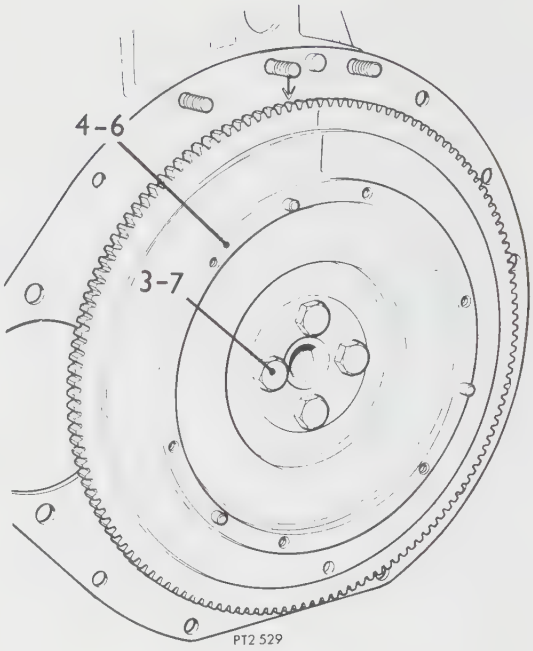

Removing

1. Remove the gearbox. 37.20.01, or engine assembly. 12.41.01.
2. Remove the clutch assembly. 33.10.01.
3. Remove the four bolts securing the flywheel to the crankshaft.
4. Lift off the flywheel assembly.

Refitting

5. Clean the flywheel mating face with the crankshaft flange. Check the dowel for damage, and that the crankshaft spigot bush is in position.
6. Fit the flywheel to the crankshaft, locating over the dowel in the crankshaft.
7. Tighten the flywheel retaining bolts evenly to the correct torque–see Section 06.
8. Using a dial indicator gauge, check the flywheel for run-out, not to exceed 0.002 in (0.051 mm) at 3.0 in (76.2 mm) radius from spigot centre. Check concentricity, not to exceed 0.004 in (0.100 mm).
9. Refit the clutch assembly. 33.10.01.
10. Refit the gearbox. 37.20.01, or engine assembly. 12.41.01.

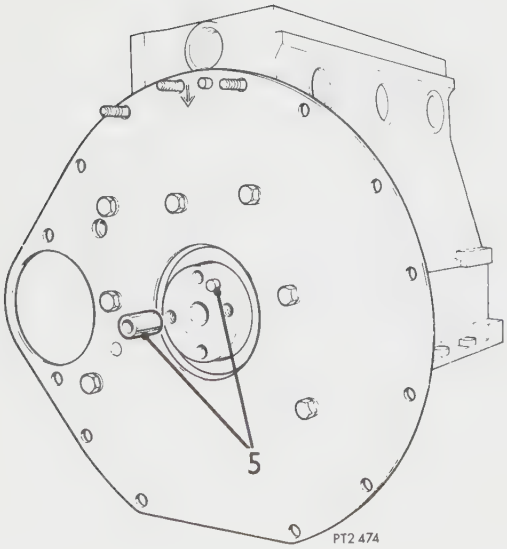

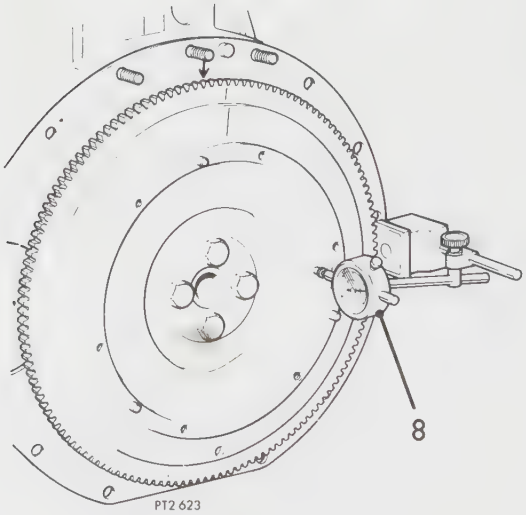

STARTER RING REAR

– Remove and refit 12.53.19

Removing

1. Isolate the battery.
2. Remove the flywheel. 12.53.07.
3. Drill a hole ¼ in (6.35 mm) diameter at the point of intersection of a scribe line between any two teeth and a scribe line midway between the root diameter and inside diameter of the ring gear.
4. Hold the flywheel assembly in a soft-jaw vice.
5. Place a cloth of heavy material over the ring gear for protection against flying fragments.
   WARNING: Ensure adequate protection, particularly for the eyes, to prevent injury from flying fragments when the ring gear is split.
6. Place a cold chisel immediately above the centre line of the drilled hole and strike sharply to split the ring gear.

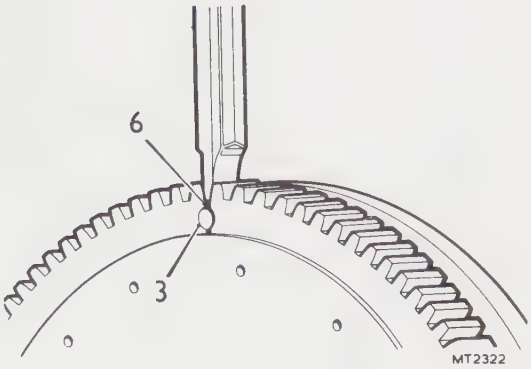

Refitting

7. Heat the replacement starter ring gear uniformly to a maximum of 200°C.
8. Place the flywheel on a flat surface, clutch face side uppermost, and clean the ring gear locating register.
9. Locate the ring gear and hold in position until it contracts sufficiently to grip the flywheel.
10. Allow the ring gear to cool gradually to avoid distortion. A maximum gap of 0.025 in (0.635 mm) is tolerable between the ring gear and the flywheel face in any one area of 6 in (15 cm) around the circumference.
11. Refit the flywheel, 12.53.07, and check that ring gear eccentricity does not exceed 0.010 in (0.254 mm).

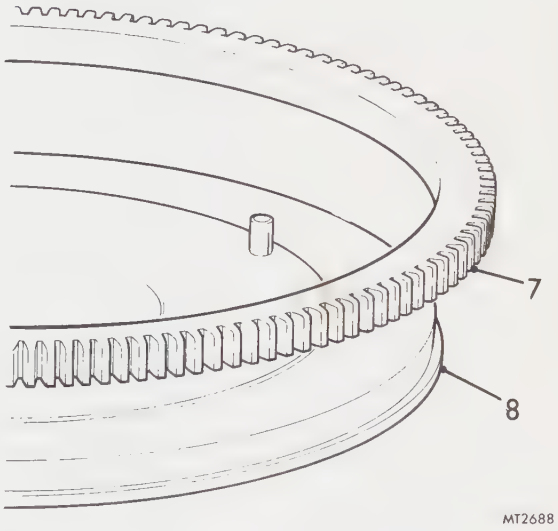

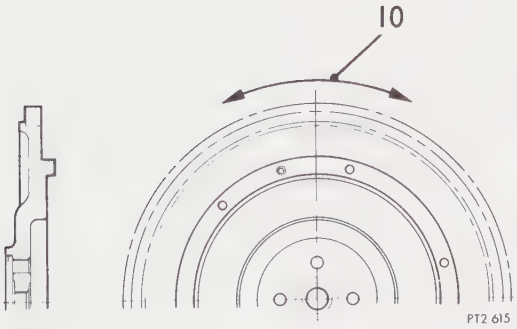

OIL FILTER

– Remove and refit **12.60.01**

Removing

1. Isolate the battery.
2. Grasp the oil filter with the hands and turn anti-clockwise.
3. Remove the filter.
4. Discard the sealing ring.

Refitting

5. Clean the cylinder block face.
6. Smear a new sealing ring with grease to prevent 'picking up'.
7. Fit the filter, turning clockwise and tighten (hand torque only).
8. Reconnect the battery.
9. Start the engine and check for oil leaks between the cylinder block and filter.

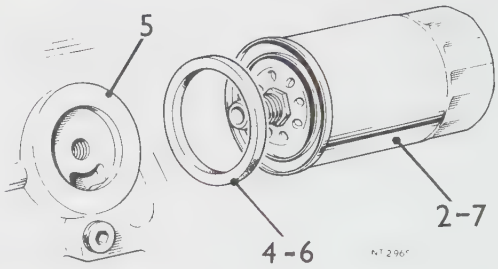

OIL PICK-UP STRAINER

– Remove, clean, and refit **12.60.20**

Removing

1. Remove the sump. 12.60.44.
2. Release the oil strainer locknut.
3. Unscrew the oil strainer and remove it.
4. Wash the oil strainer in petrol and dry it before refitting.

Refitting

5. Reverse instructions 1 to 3.

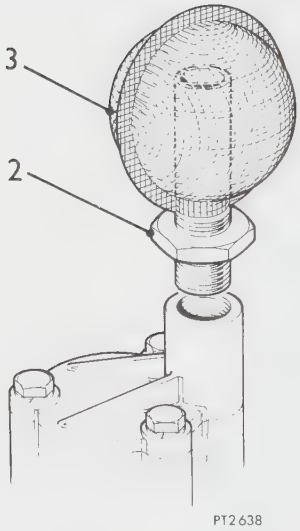

OIL PUMP

– Remove and refit 12.60.26

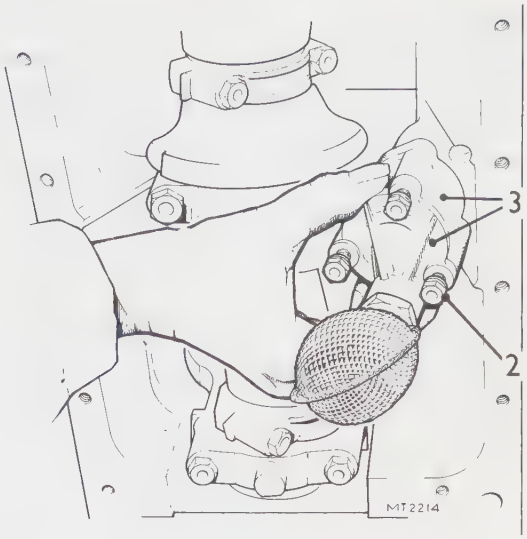

Removing

1. Remove the oil sump. 12.60.44.
2. Slacken and remove the three bolts complete with washers securing the oil pump to the crankcase.
3. Remove the oil pump complete with cover-plate.

Refitting

4. Reverse instructions 1 to 3, ensuring:
   a. The oil pump drive shaft engages correctly into the drive gear shaft.
   b. The securing bolts are evenly tightened.
   c. Absolute cleanliness is observed.

OIL PUMP

– Overhaul 12.60.32

1. Isolate the battery.
2. Remove the oil pump from the crankcase. 12.60.26.
3. Remove the cover-plate complete with strainer.
4. Remove the inner rotor and shaft assembly.
5. Remove the outer rotor.
6. Clean oil from the body and rotors, and reassemble.

continued

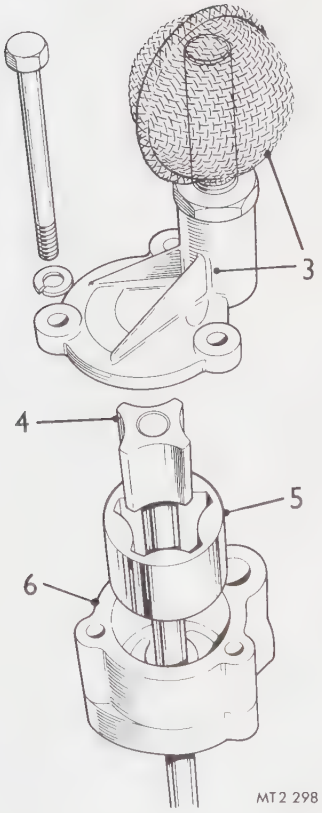

7. Place the pump in a vice and using a feeler gauge check as follows:
   a. With a straight edge across the pump body face check the clearance between the rotors and the straight edge. See Data.
   b. Check the clearance between the inner and outer rotors. See Data.
   c. Check the clearance between the outer rotor and the body. See Data.
8. Examine the cover plate for scoring and test on a surface plate for distortion.
9. Reassemble the pump fitting any new parts necessary to satisfy the above quoted tolerances. Renew any components that are unsatisfactory due to pitting, scoring or corrosion.

   CAUTION: The inner rotor and spindle and the outer rotor are supplied only as an assembly and under no circumstances must they be separated and fitted as individual replacements to a worn pump.
10. Refit the pump to the crankcase. 12.60.26, instruction 4.

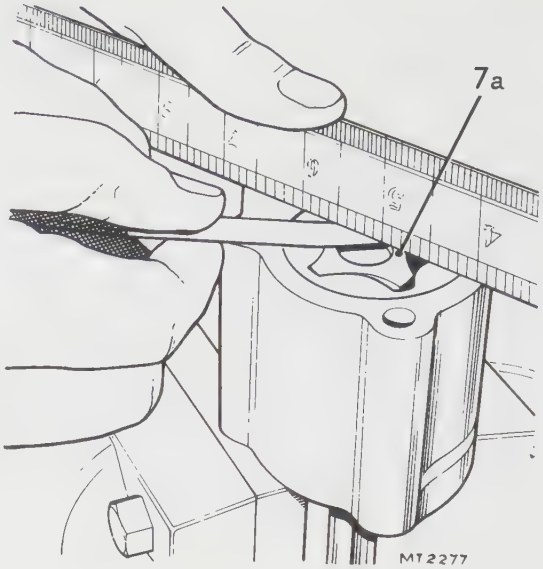

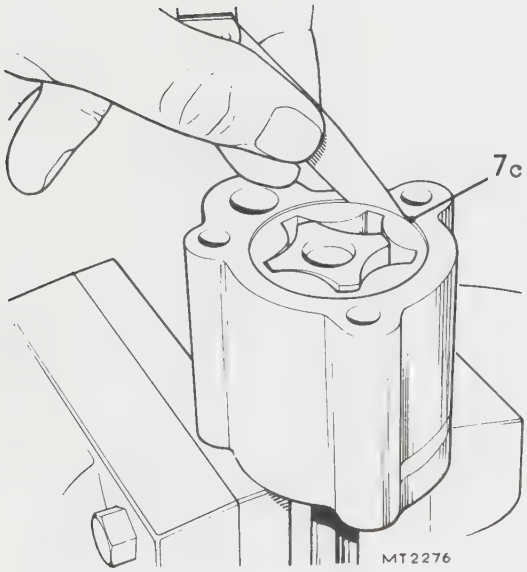

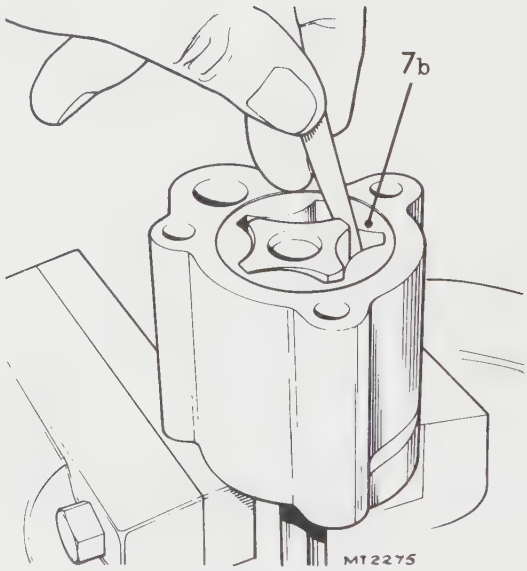

DATA

Maximum clearance between outer rotor and pump body	0.008 in (0.203 mm)
Maximum clearance between outer and inner rotors	0.010 in (0.254 mm)
Maximum clearance between the cover plate and rotors (end clearance)	0.004 in (0.102 mm)

OIL SUMP

– Remove and refit 12.60.44

Removing

1. Drain the sump and refit the plug (UK and U.S.A. non Catalytic Converter specification).
2. Drain the sump and refit the banjo and plug using new washers, if necessary, (U.S.A. Catalytic Converter specification only).
3. Remove the sixteen bolts securing the sump to the crankcase.
4. Withdraw the sump.
5. Remove the gasket.

Refitting

6. Clean the crankcase and sump mating faces.
7. Smear grease on both sides of a new gasket and place in position on the sump.
8. Fit the sump tightening the bolts and spring washers evenly, noting that the two longer bolts are fitted to the rear of the sump.
9. Check the tightness of the sump plug and refill with oil of a recommended grade to the high mark on the dip stick.

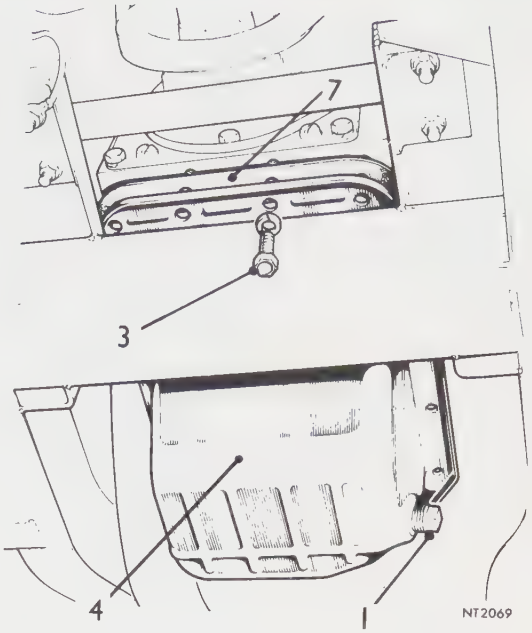

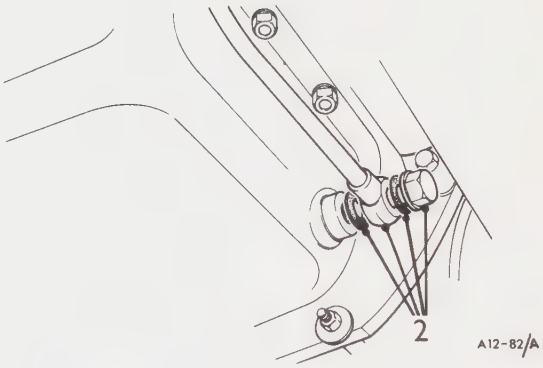

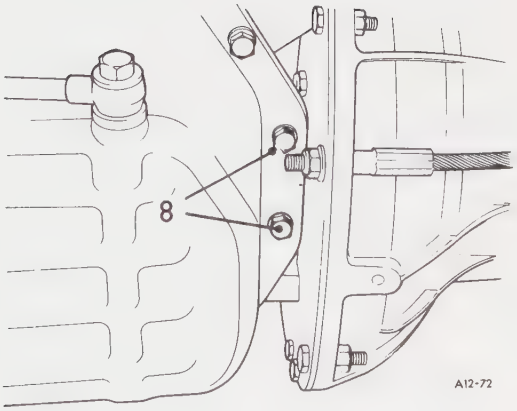

OIL PRESSURE RELIEF VALVE

– Remove and refit 12.60.56

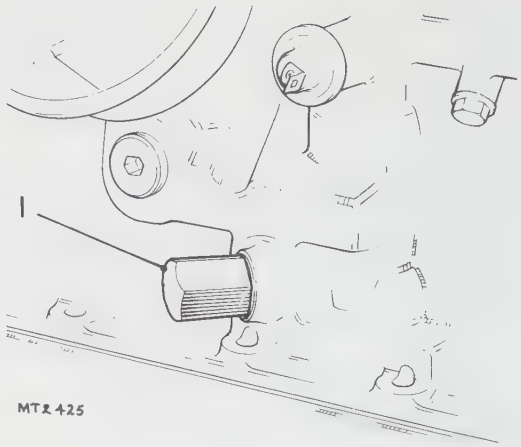

Removing

1. Unscrew the relief valve body from the cylinder block.
2. Remove the washer.
3. Take out the plunger.
4. Remove the spring.

Refitting

5. Reverse instructions 1 to 4, ensuring:
   a. Cleanliness.
   b. A new spring is fitted if free length is not in accordance with Data.

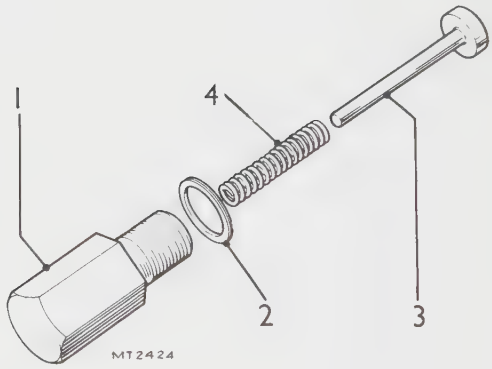

DATA

Oil pressure relief valve free length . . . . . 1.53 in (38.8 mm)

TIMING COVER

– Remove and refit 12.65.01

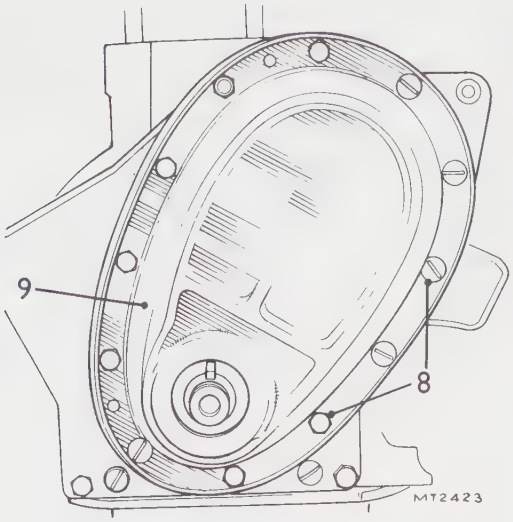

Removing

1. Remove the radiator. 26.40.01.
2. Remove the air pump. 17.25.07 (U.S.A. Catalytic and non Catalytic converter specification).
3. Remove the alternator. 86.10.02 (U.S.A. Catalytic and non Catalytic converter specification only).
4. Slacken the alternator adjustment and remove the drive belt (U.K. and European specification only).
5. Remove the fan blades.
6. Remove the crankshaft pulley. 12.21.01.
7. Remove the common alternator and air pump brackets and adjusting links and spacer (U.S.A. Catalytic and non Catalytic converter specification).
8. Remove the timing cover retaining screws, bolts and one nut.
9. Remove the timing cover complete with gasket taking care not to damage the oil seal.

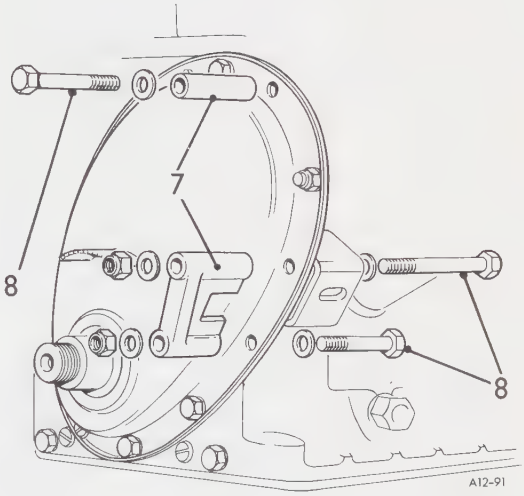

Refitting

10. Clean the timing cover and engine plate mating faces.
11. Smear both sides of a new gasket with grease and place in position.
12. Taking care not to damage the oil seal, fit the timing cover and retain with the screws and bolts relative to the particular model. To facilitate the fitting, use a length of welding rod bent at a right angle to hold the chain tensioner away from the chain. Take care not to damage the gasket when removing the rod.
13. Fit the crankshaft pulley. 12.21.01.
14. Fit the common alternator and air pump brackets and adjusting links–reversing instruction 7.
15. Place the alternator drive belt in position and fit the air pump. 17.25.07 (U.S.A. Catalytic and non Catalytic specification) and adjust belt tension.
16. Fit the alternator and adjust the drive belt tension–reversing instruction 3.
17. Fit the fan blades.
18. Fit the radiator. 26.40.01.

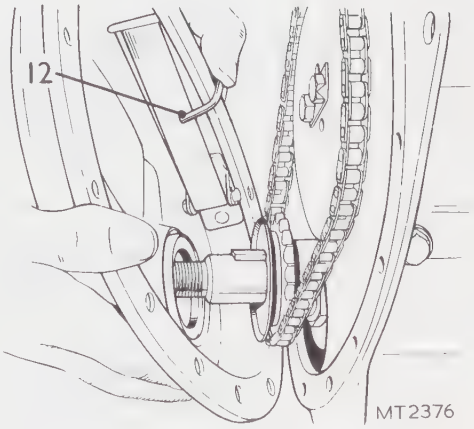

TIMING CHAIN COVER OIL SEAL

– Remove and refit 12.65.05

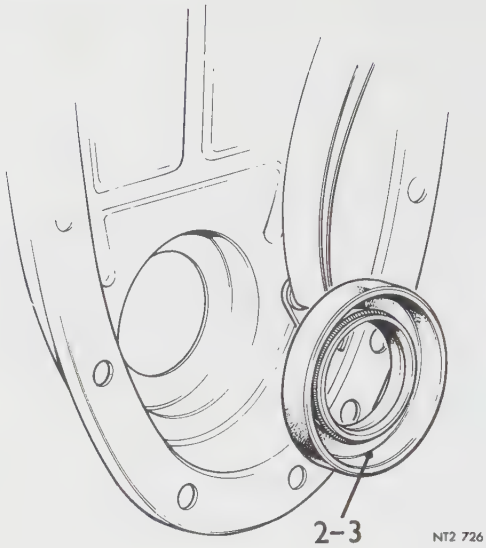

Removing

1. Remove the timing chain cover. 12.65.01.
2. Carefully remove the oil seal, avoiding damage to the timing cover.

Refitting

3. Lubricate a new seal and with the lip side trailing, press it squarely into the timing chain cover.
4. Refit the timing chain cover. 12.65.01.

VALVE TIMING

– Check and adjust 12.65.08

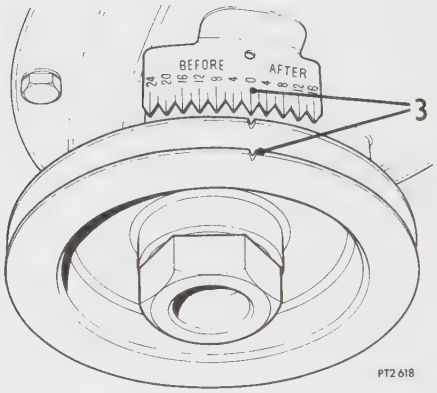

1. Remove the rocker cover. 12.29.42.
2. Adjust the rocker clearances of Nos. 7 and 8 valves to 0.080 in (2.032 mm) to give a working clearance. 12.29.48.
3. Turn the crankshaft until No. 1 piston is at T.D.C. on the compression stroke, indicated by the mark on the crankshaft pulley coinciding with the zero line on the timing cover scale.
4. Check that Nos. 1 and 2 valves are closed, and numbers 7 and 8 are on the 'rock'.
5. Using two feeler gauges of similar thickness, check that the rocker clearances of Nos. 7 and 8 valves are the same. If necessary, oscillate the camshaft to achieve this condition. Ensure that when the rocker clearances are the same the conditions in instructions 3 and 4 are maintained.

   NOTE: The actual valve clearance does not matter provided the clearances are the same.
6. Adjust all valve clearances to 0.010 in (0.25 mm).
7. Refit the rocker cover.

continued

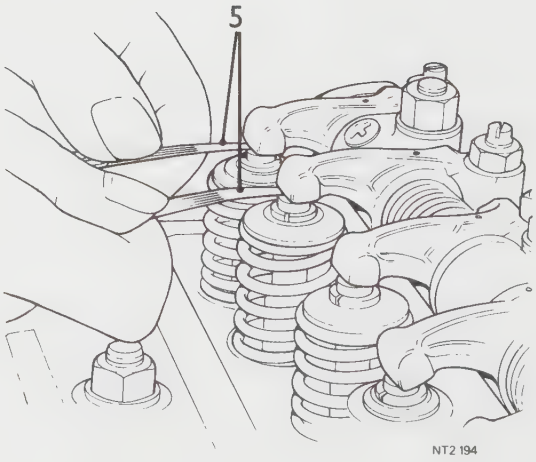

Adjust

8. Remove the rocker cover. 12.29.42.
9. Remove the timing chain cover. 12.65.01.
10. Remove the oil thrower.
11. Bend back the camshaft sprocket lock tabs and remove the two bolts.
12. Withdraw the sprockets and timing chain.
13. Check the sprockets for alignment and the chain for wear. 12.65.12.
14. Adjust the clearances of number 7 and 8 valves to 0.080 in (2.032 mm).
15. With numbers 1 and 2 valves closed and numbers 7 and 8 on the 'rock' check using two feeler gauges of similar thickness, the rocker clearances of numbers 7 and 8 valves whilst oscillating the camshaft until the clearances are the same – see Instruction 5.
16. Temporarily refit the timing chain cover using only sufficient bolts to locate it correctly.
17. Temporarily fit the crankshaft pulley and turn the crankshaft until number one piston is at T.D.C. as described in instruction 3 above.
18. Remove the crankshaft pulley and timing cover taking care not to allow the crankshaft to move.
19. Encircle both sprockets with the timing chain and fit them to the camshaft and crankshaft respectively keeping the chain taut on the drive side. See note below.
20. If necessary, re-mark the sprockets as illustrated.
21. Adjust the clearances of numbers 7 and 8 valves to 0.010 in (0.25 mm) and check the clearances of the remaining valves.
22. Reverse instructions 8 to 11.

NOTE: The camshaft timing sprocket is provided with four holes which are equally spaced but off-set from the tooth centre. Half-tooth adjustment is obtained by rotating the sprocket 90° from its original position. A quarter tooth adjustment is possible by turning the sprocket 'back to front'. By rotating the sprocket 90° in this position, three quarters of a tooth variation is available.

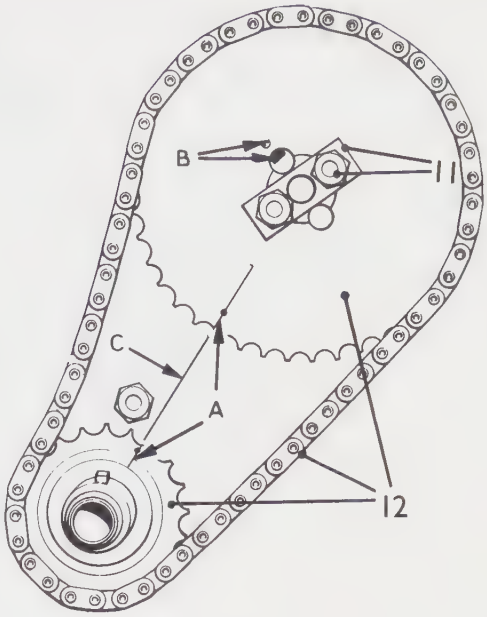

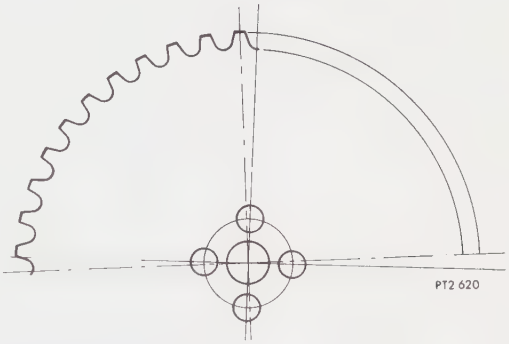

DATA

Valve timing

Inlet opens	18° B.T.D.C.
closes	58° A.B.D.C.
Exhaust opens	58° B.B.D.C.
closes	18° A.T.D.C.

TIMING CHAIN AND SPROCKETS

– Remove and refit	12.65.12
Timing chain	12.65.14

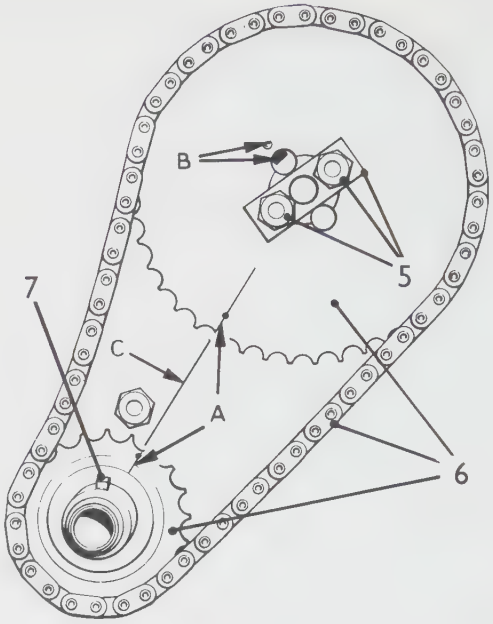

MT2 280

Removing

1. Isolate the battery.
2. Remove the timing chain cover. 12.65.01.
3. Remove the oil thrower.
4. Turn the crankshaft until the marks 'A' are in line with scribe mark 'C' and check that punch marks 'B' correspond and the crankshaft keyway is at 12 o'clock.
5. Bend back the lock tab and remove the two bolts securing the camshaft sprocket to the camshaft.
6. Taking care not to move the camshaft or crankshaft remove both sprockets together with the timing chain.

Refitting

7. Remove the crankshaft drive key.
8. Temporarily refit both sprockets.
9. Check the alignment of the sprockets by placing a straight edge across the teeth of both sprockets.
10. Correct any mis-alignment by fitting selective shims behind the crankshaft sprockets.
11. Remove the sprockets and refit the crankshaft drive key.
12. Encircle the sprockets with the timing chain and refit ensuring that the marks on the sprockets line up and correspond as in instruction 4.

continued

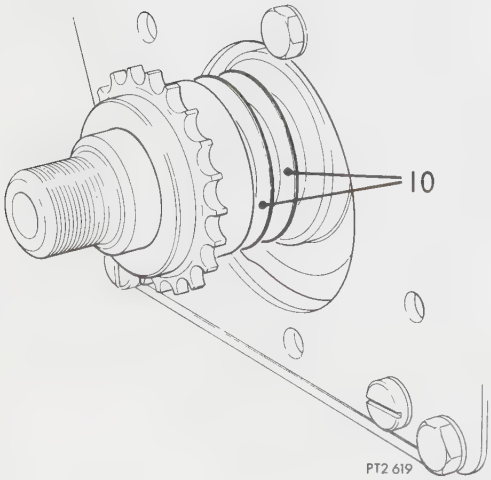

PT2 619

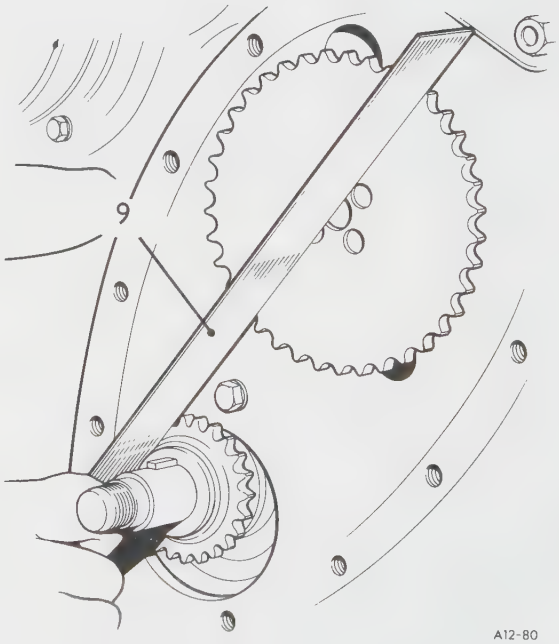

A12-80

13. Temporarily secure the camshaft sprocket and check the timing chain wear by placing a straight edge along the slack run of the chain. If movement at the mid-point 'A' exceeds ⅜ in (9.53 mm) renew the chain.
14. Fit a new camshaft sprocket lock plate, refit the bolts and bend over the tabs.
15. Refit the oil thrower, with the dished face outwards.
16. Refit the timing chain cover. 12.65.01.

NOTE: If new sprockets are fitted, ensure that they are marked up as in instruction 4.

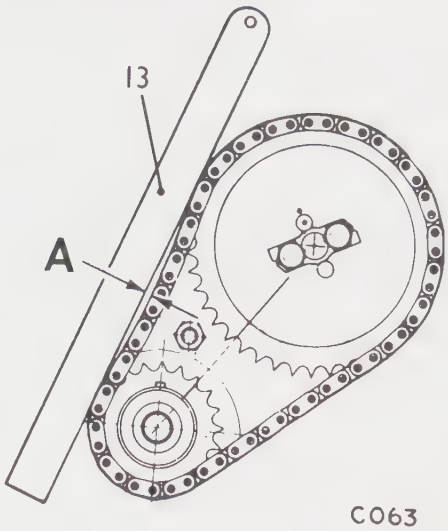

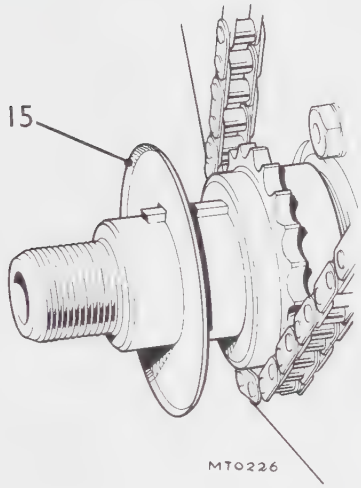

TIMING CHAIN TENSIONER

– Remove and refit 12.65.28

Removing

1. Remove the timing chain cover. 12.65.01.
2. Prise open the tensioner blades.
3. Slide the tensioner off the anchor pin.

Refitting

4. Reverse instructions 1 to 3, ensuring that the tensioner is fitted correctly, i.e. convex surface towards the test timing chain.

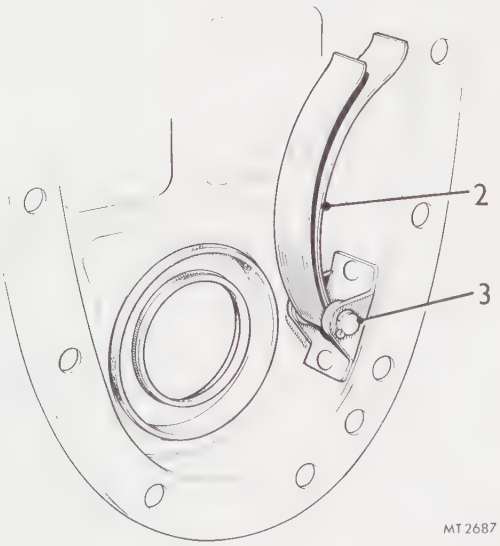

EMISSION AND EVAPORATIVE CONTROL OPERATIONS

Adsorption canister
– remove and refit 17.15.13

Air distribution manifold
– remove and refit 17.25.17

Air intake temperature control
– description 17.30.00
– function test 17.30.02

Air pump
– drive belt – remove and refit 17.25.15
– drive belt tensioning 17.25.13
– remove and refit 17.25.07

Catalytic converter
– remove and refit 17.50.01

Check valve
– remove and refit 17.25.21
– test 17.25.22

Description
– crankcase emission control 17.00.01
– evaporative loss control 17.00.02
– exhaust emission control 17.00.03

Diverter and relief valve
– remove and refit 17.25.25

E.G.R. cut-out valve
– remove and refit 17.45.05

E.G.R. valve
– remove and refit 17.45.01

Running-on control valve 17.40.01

Vapour separator
– remove and refit 17.15.02

CRANKCASE EMISSION CONTROL

– Description 17.00.01

The engine breather outlet from the rocker cover is connected directly to the adsorption canister. A hose leading into the depression area of the carburetters (or carburetter in the case of USA models) is connected into the engine breather pipe by a 'T' piece junction. When the engine is running the depression created draws engine fumes and blow-by gases from the crankcase into the combustion chambers, thus preventing these pollutants from entering the atmosphere. Air, necessary for engine breathing, is drawn through the adsorption canister of the evaporative control system, see 17.00.02 (USA models only).

1. Crankcase purge line.
2. Canister purge line.
3. Adsorption canister.

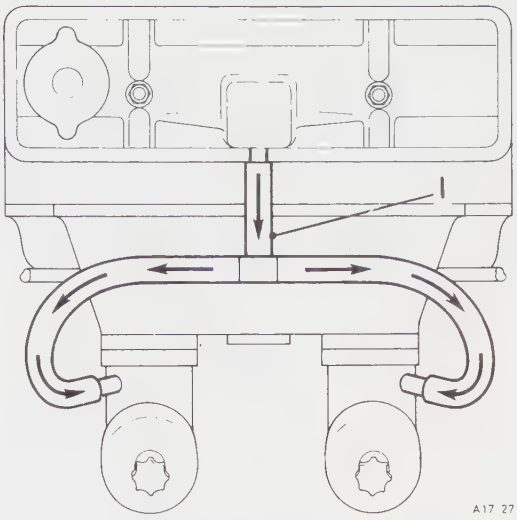

U.K. and European Crankcase Emission Control Layout

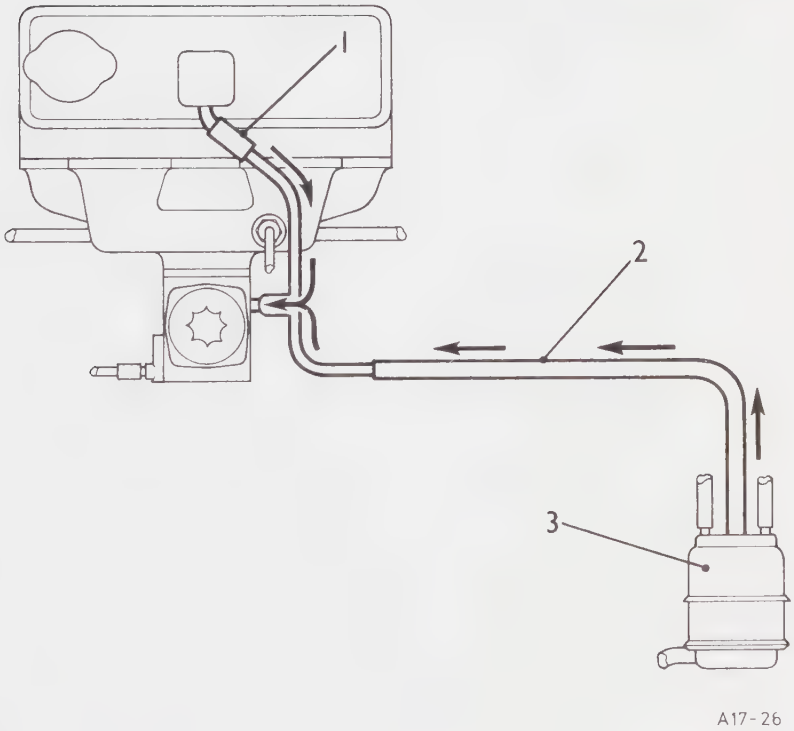

U.S.A. Catalytic and non Catalytic Layout

EVAPORATIVE LOSS CONTROL SYSTEM (USA MODELS ONLY)

– Description 17.00.02

The system is designed to prevent the emission of fuel vapour to the atmosphere. Vapour collected from the fuel tank and carburetter float chamber is stored in the adsorption canister while the engine is at rest. Once the engine is started the vapour is purged from the canister and passed to the combustion chambers together with the crankcase emissions, see 17.00.01.

continued

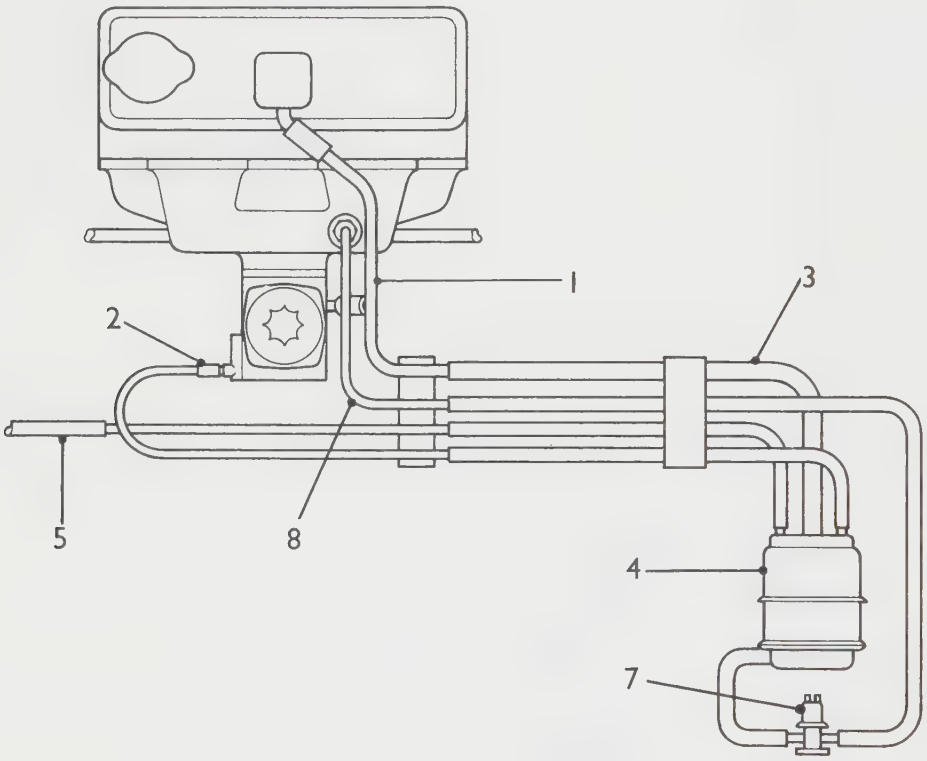

A17-25

1. Crankcase purge line.
2. Carburetter float chamber vent pipe.
3. Canister purge line.
4. Adsorption canister.
5. Fuel tank vent pipe.
7 Anti run-on valve.
8. Manifold vacuum line.

Adsorption canister

The adsorption canister provides a means of storing fuel vapour whilst the car is parked. The canister, which is not serviceable, contains active charcoal granules. Vapour tubes from the fuel tank, carburetter float chamber, and the purge pipe from the engine breathing system are connected to ports on top of the canister. The manifold vacuum pipe is connected to the anti-run on valve at the base of the canister.

Fuel vapour entering the canister through the vapour pipes is adsorbed by the charcoal granules. When the engine is started air is drawn by the engine breather system through the purge tube, at the bottom of the canister. The resulting purging action by the air passing over the granules carries the vapours through the engine breather system to the combustion chambers.

Fuel Tank

When the fuel filler cap is correctly fitted the system is sealed and venting of the tank can only take place via a vapour separator to the adsorption canister.

The fuel tank has a restricted fill allowing approximately 5% of the tank volume for expansion. To achieve this a restrictor is incorporated in the line to the adsorption canister. This permits only small air and vapour flows as would be the case under normal running and stationary conditions. The restrictor however, is not large enough to vent the tank during filling conditions. Once the fuel has reached a level flush with the bottom of the filler neck, the resulting pressure caused by the restriction precludes further filling of the tank above the predetermined maximum level.

Vapour Separator

A vapour separator is incorporated in the line between the top of the fuel tank and the adsorption canister. Its purpose is to provide a trap for fuel that could surge from the tank under adverse travelling or road surface conditions. Fuel thus spilled from the tank will drain back and not contaminate the adsorption canister.

1. Fuel filler pipe.
2. Sealed cap.
3. Vapour separator.
4. Restrictor.
5. Adsorption canister.
6. Maximum level.

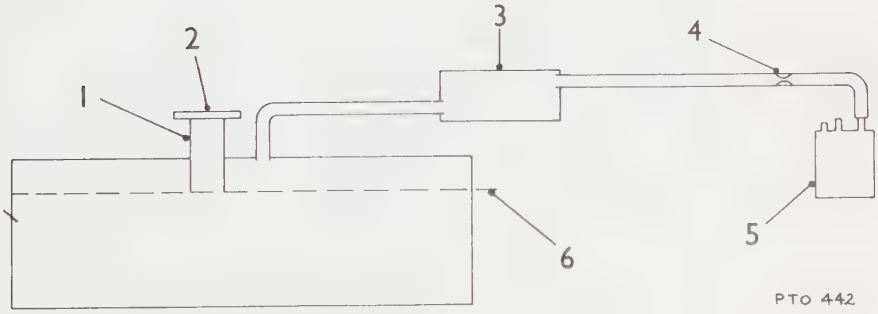

Anti-run-on valve

The purpose of the valve is to prevent the engine 'running-on' once the ignition has been switched off.

The solenoid operated valve is connected by a hose to the base of the adsorption canister. The manifold vacuum hose is connected to the opposite side of the valve. The solenoid is connected electrically by two leads, one to the oil pressure switch and the other to the ignition switch.

When the ignition is turned-off a contact in the switch closes and energizes the solenoid thus opening the valve to manifold vacuum. At the same instant the purge vent to atmosphere closes.

Since the throttle is now closed, the carburetter vent valve has opened the passage to the float chamber. Partial vacuum has now been transferred from the base of the adsorption canister, via the float chamber vent pipe, to the float chamber thus preventing fuel entering the carburetter jet.

When the engine stops revolving the drop in oil pressure activates the oil pressure switch, opens the circuit and de-energizes the solenoid valve.

1. Engine.
2. Carburetter vent valve.
3. Adsorption canister.
4. Fuel tank.
5. Ignition switch.
6. Oil pressure switch.
7. Manifold vacuum.
8. Solenoid valve.

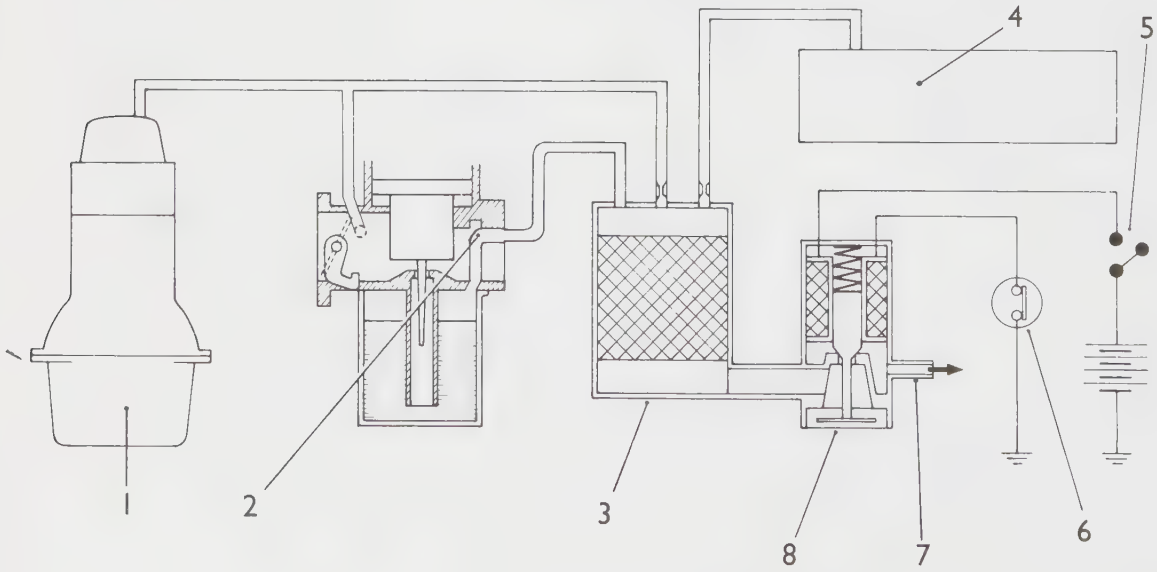

PTO 505/1

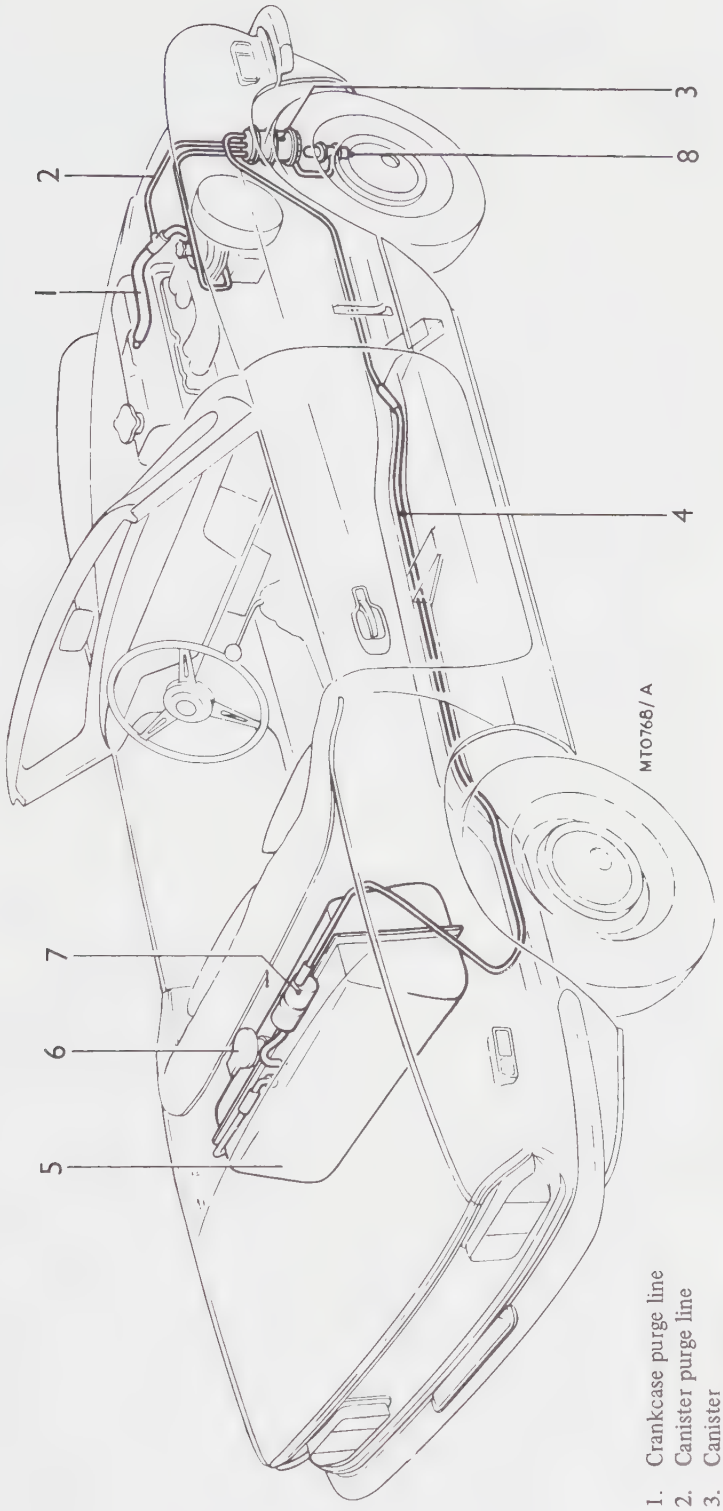

SPITFIRE EVAPORATIVE EMISSION CONTROL SYSTEM

1. Crankcase purge line
2. Canister purge line
3. Canister
4. Vapour feed line
5. Fuil tank (limited fill)
6. Sealed fuel filler cap
7. Vapour separator
8. Anti-run-on valve

EXHAUST EMISSION CONTROL

– Description 17.00.03

The following, individually described components are fitted to comply with legislation aimed at reducing the hydrocarbon, nitric oxide, and carbon monoxide content of the exhaust gases emitted to the atmosphere.

Air pump

The rotary vane type air pump is fitted at the front of the engine and driven by a belt from a crankshaft pulley.
The pump delivers air under pressure to each of the four exhaust ports via a diverter and relief valve, check valve and air inlet manifold.
The pressurized air combines with the exhaust gases to continue and assist in making more complete the oxidization process in the exhaust system.

1. Inlet port
2. Exhaust port
3. Vanes
4. Rotor
5. Carbon sealing shoes
6. Bearings

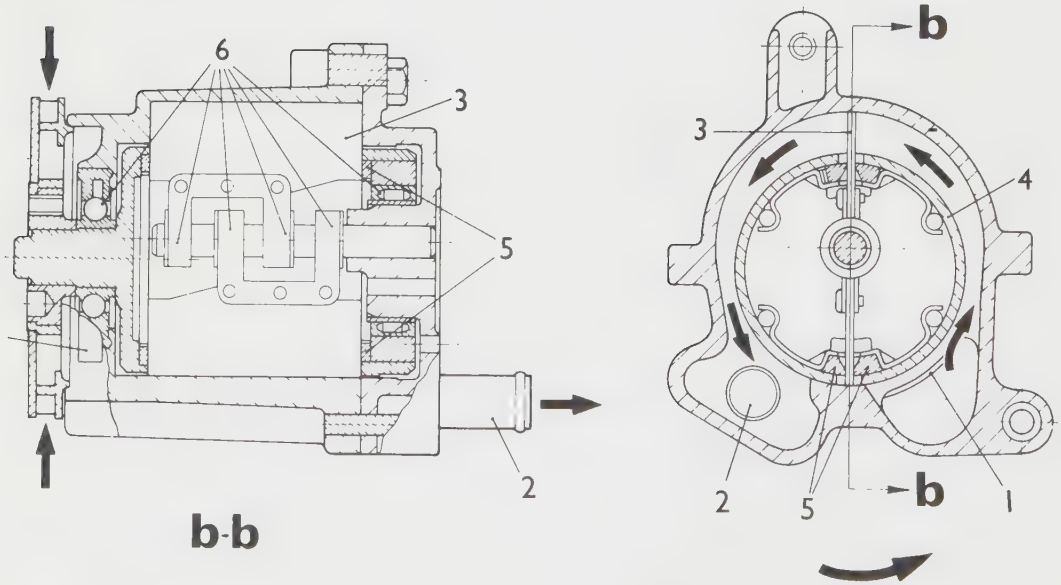

QTO 103

Diverter and Relief valve

This combined valve is incorporated to divert the air from the pump during deceleration to prevent backfire. The relief valve allows excessive air pressure at high engine speeds to discharge to the atmosphere.

1. Relief valve
2. Normal flow from air pump
3. Diverted air
4. Relief valve air
5. Manifold vacuum
6. Timed vacuum
7. Timing feature
8. Diverter and relief valve ports
9. Diaphragm

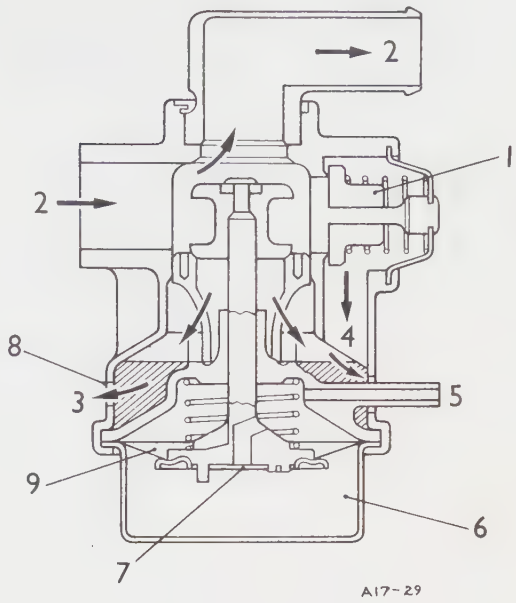

Check valve

The check valve is a one-way valve positioned between the diverter and relief valve and the air manifold. Its purpose is to protect the pump from back-flow of exhaust gases. The valve closes if the pump pressure falls while the engine is running, should, for example, the drive belt break.

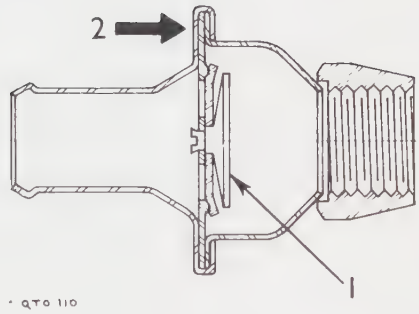

1. Valve diaphragm
2. Direction of air flow

Air Manifold

The air manifold is finally responsible for delivering the pumped air directly into the exhaust ports through four small branch pipes.

Exhaust Gas recirculation system

An exhaust gas recirculation valve is mounted on the exhaust manifold and controls the flow of exhaust gas into the intake manifold. The control signal is taken from a throttle edged tapping which gives no recirculation at idle speed or full load, but gives an amount of recirculation dependent upon a vacuum signal and the metering profile of the valve.

E.G.R. Cut-out valve (non Catalytic converter specification only)

This valve is attached to the carburetter and is actuated by a heel on the fast idle cam. This valve cuts the signal to the E.G.R. valve when the choke is in operation by opening an air bleed into the vacuum line. The mixture control knob (choke) on the fascia must be pulled out approximately ¼ in (6.35 mm) before the cut-out operates and must be pushed-in within 1/10 in (2.54 mm) or fully off before the E.G.R. valve is operational.

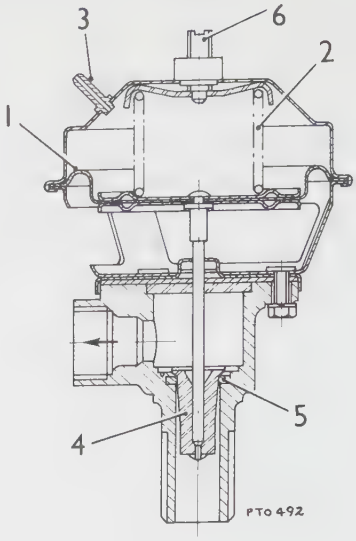

1. Diaphragm
2. Spring
3. To vacuum source
4. Metering pintle
5. Valve seat
6. Production adjustment – sealed after setting

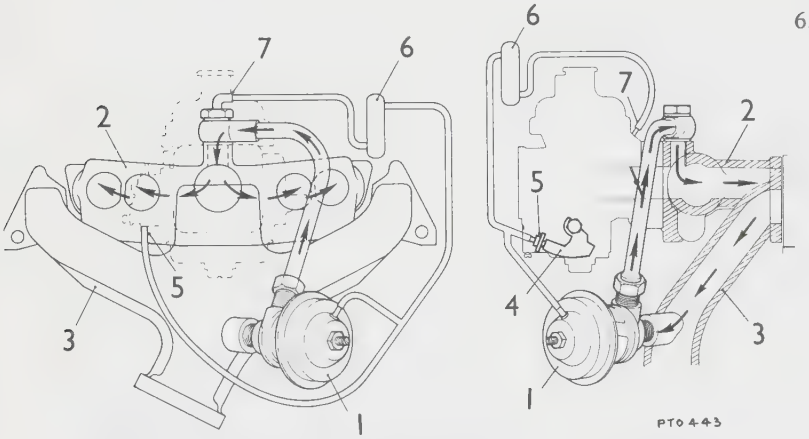

Catalytic Converter specification Vacuum Control and Gas Flow

1. E.G.R. Valve
2. Inlet manifold
3. Exhaust manifold
4. Choke cam
5. E.G.R. cut-out valve
6. Fuel trap
7. Vacuum source – throttle edge tapping

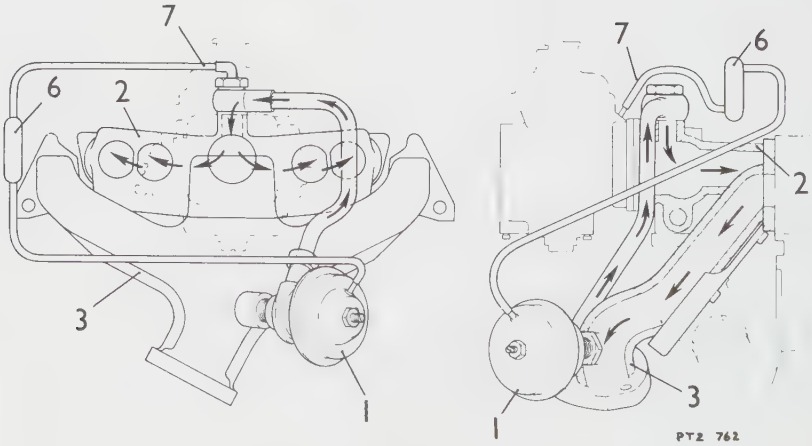

Non Catalytic Converter specification Vacuum Control and Gas Flow

VAPOUR SEPARATOR

– Remove and refit 17.15.02

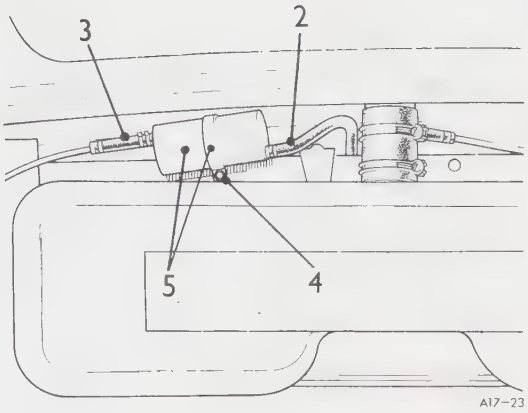

Removing

1. Remove the rear compartment trim pad. 76.13.20.
2. Remove boot trim pad and disconnect the electrical leads to the boot illumination lamp.
3. Disconnect the hose from the fuel tank to the vapour separator.

[WARNING: Because of the possible presence of fuel fumes, avoid naked lights or actions likely to cause sparks.]

4. Disconnect the hose from the vapour separator to the adsorption canister.
5. Remove the nut and bolt securing the vapour separator retaining clip to the fuel tank.
6. Remove the vapour separator and clip.

Refitting

7. Reverse instructions 1 to 6.

ADSORPTION CANISTER

– Remove and refit 17.15.13

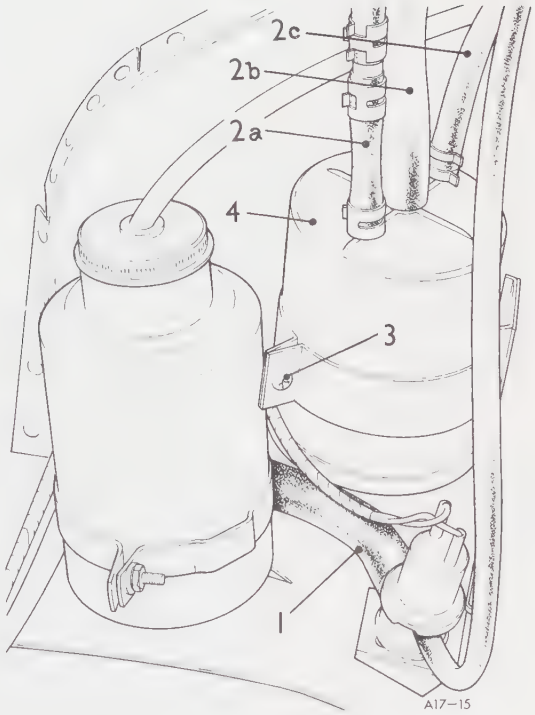

Removing

1. Disconnect the canister to run-on valve pipe.

[WARNING: Because of the possible presence of fuel fumes, avoid naked lights or actions likely to cause sparks.]

2. Disconnect from the canister:
   a. the canister to fuel tank pipe.
   b. the canister purge pipe.
   c. carburetter vent pipe.
3. Slacken the clamp and screw and nut.
4. Remove the canister.

Refitting

5. Secure the canister in the clamp.
6. Reverse instructions 1 to 3.

AIR PUMP

– Remove and refit **17.25.07**

Removing

1. Remove the engine L.H. valance.
2. Remove the oil filter.
3. Disconnect the air hose from the air pump.
4. Remove the pump pivot bolt.
5. Remove the adjusting bolt.
6. Slacken the link pivot bolt.
7. Remove the drive belt.
8. Remove the air pump.

Refitting

9. Reverse instructions 1 to 8 ensuring that the drive belt is correctly tensioned. 17.25.13.

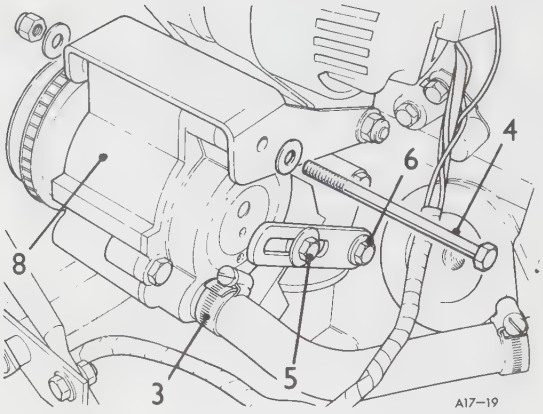

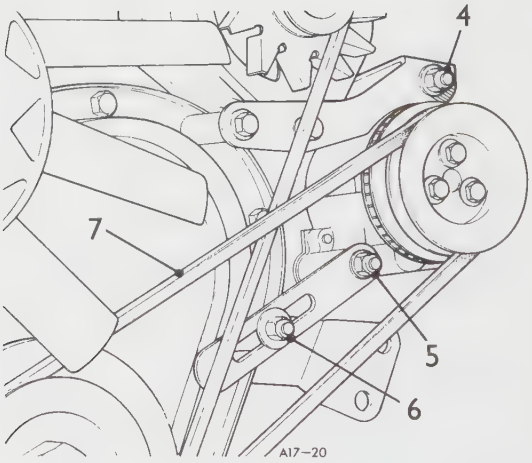

AIR PUMP DRIVE BELT

– Tensioning 17.25.13

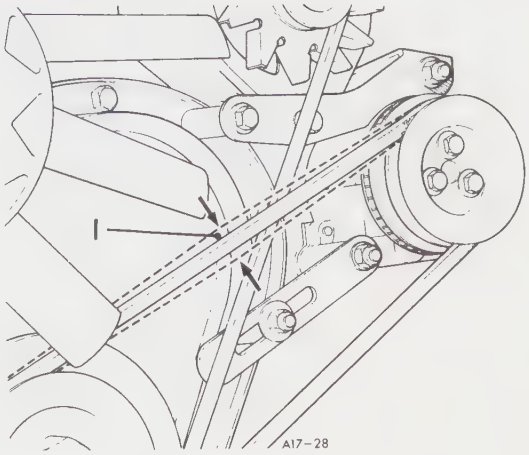

Checking

1. The adjustment is correct when the drive belt can be deflected laterally ¼ in (6.4 mm) either side of its static position at the mid-point of its run.

Tensioning

2. Slacken the adjusting link nut and bolt.
3. Slacken the adjusting link pivot nut and bolt.
4. Slacken the air pump pivot nut and bolt.
5. Move the pump towards the engine to release the tension.
6. Move the pump away from the engine to increase the tension.
7. Reverse instructions 2 to 4.
8. Re-check the tension.

AIR PUMP DRIVE BELT

– Remove and refit 17.25.15

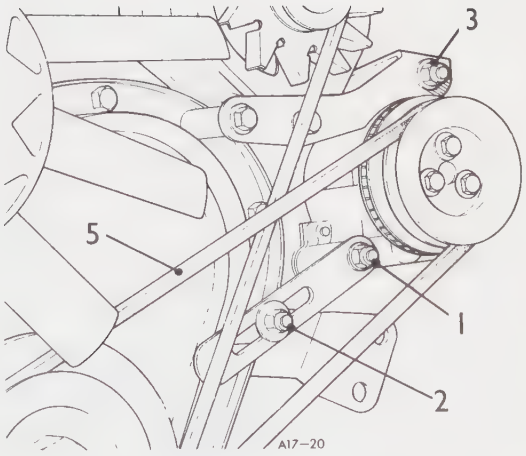

Removing

1. Slacken the adjusting link bolt and nut.
2. Slacken the adjusting link pivot bolt and nut.
3. Slacken air pump pivot nut and bolt.
4. Move the pump towards the engine to release the drive belt tension.
5. Remove the drive belt from the pulleys.

Refitting

6. Fit the drive belt to the crankshaft and air pump pulley.
7. Move the air pump away from the engine and tension the belt. 17.25.13

AIR DISTRIBUTION MANIFOLD

– Remove and refit 17.25.17

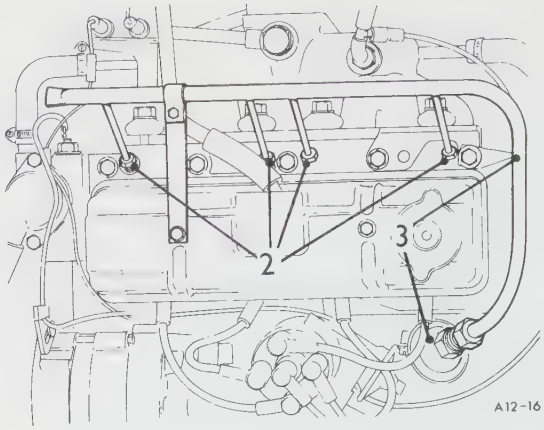

Removing

1. Disconnect the hose from the diverter and relief valve. – instruction 1,17.25.21.
2. Unscrew the four union nuts securing the air injection tubes into the exhaust ports.
3. Withdraw the air distribution manifold complete with the check valve.
4. Hold the air distribution manifold in a vice by the hexagon and remove the check valve.

Refitting

5. Reverse instructions 1 to 4.

CHECK VALVE

– Remove and refit 17.25.21

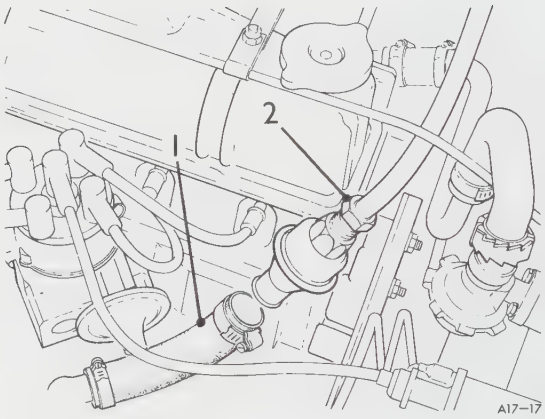

Removing

1. Disconnect the air hose from the diverter and relief valve to the check valve.
2. Using two open-ended spanners – one on the air distribution manifold hexagon, to support the manifold, and the other to remove the check valve anti-clockwise.

   CAUTION: Do not impose any strain on the air manifold.

Refitting

3. Reverse instructions 1 and 2.

CHECK VALVE

– Test 17.25.22

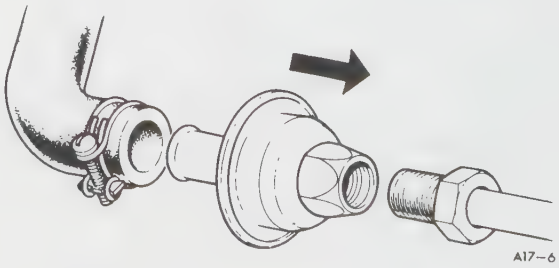

Testing

CAUTION: Do not use a pressure air supply for this test.

1. Remove the check valve. 17.25.21.
2. Blow through the valve orally in both directions in turn. Air should only pass through the valve when blown from the hose connection end in direction of arrow. Should air pass through the valve when blown from the air manifold end, renew the valve.
3. Refit the check valve. 17.25.21.

DIVERTER AND RELIEF VALVE

– Remove and refit 17.25.25

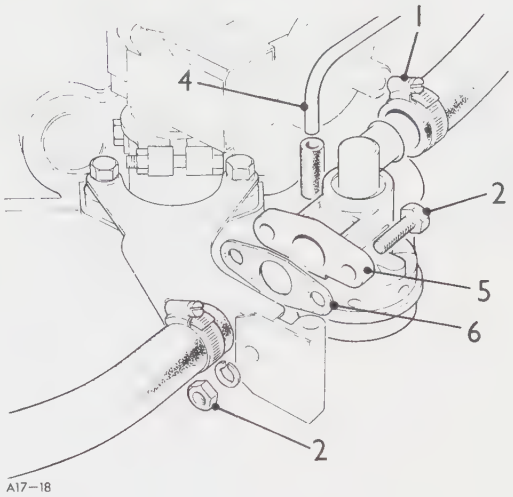

Removing

1. Disconnect the hose from the diverter and relief valve to the check valve.
2. Remove the two nuts and bolts securing the valve to its bracket.
3. Remove the drive resistor – leaving the Lucars attached.
4. Disconnect the vacuum pipe to the valve.
5. Remove the valve.
6. Remove the gasket.

Refitting

7. Reverse instructions 1 to 6 using a new gasket between the valve and bracket.

AIR INTAKE TEMPERATURE CONTROL

Description 17.30.00

The air intake temperature to the carburetter is controlled by a sponge rubber valve attached to a bi-metal strip.
When the engine is cold the valve closes the air intake aperture from the atmosphere. During this period the carburetter draws air via a hot air pipe to the back of the air intake from a box attached to the exhaust pipe.
As the temperature of the air from the exhaust pipe box increases it causes the bi-metal strip to progressively deflect until the correct intake temperature is reached. At this point the sponge rubber valve closes the aperture to the hot air supply.

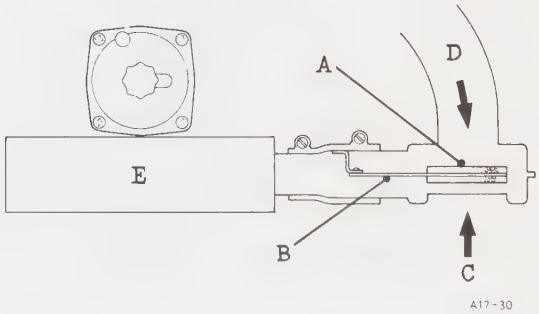

A	Sponge rubber valve
B	Bi-metal strip
C	Air from atmosphere
D	Hot air
E	Air cleaner

AIR INTAKE CONTROL

Function test 17.30.02

1. Inspect the condition of the hot air hose from the exhaust box to the back of the air intake. Renew if necessary.
2. With the engine and air cleaner in a cold condition check that the sponge rubber valve effectively closes the aperture to atmosphere at the front of the intake.
3. Start the engine and check that the valve progressively closes the aperture to the hot air supply as the engine running temperature increases.
4. Renew the valve assembly if faulty.

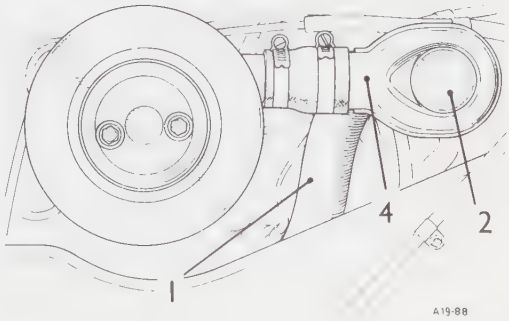

RUNNING-ON CONTROL VALVE

– Remove and refit **17.40.01**

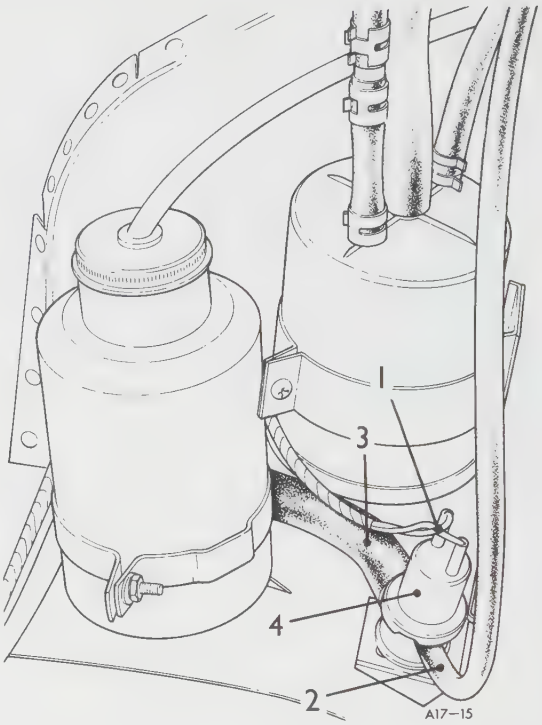

Removing

1. Disconnect the solenoid electrical leads.
2. Disconnect the vacuum control pipe.
3. Disconnect the canister to run-on valve pipe.
4. Twist the valve and withdraw it from its retaining bracket.

Refitting

5. Reverse instructions 1 to 4.

EXHAUST GAS RECIRCULATION VALVE

– Remove and refit **17.45.01**

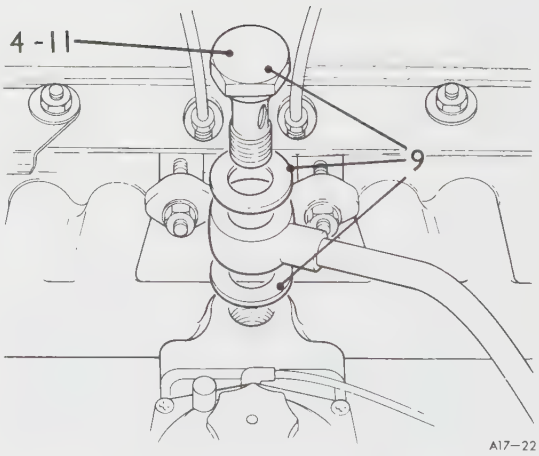

Removing

1. Remove the air cleaner. 19.10.01.
2. Disconnect the vacuum pipe T piece from the E.G.R. valve. (USA non Catalytic Converter specification only) or,
3. The single vacuum pipe from the E.G.R. valve (USA Catalytic Converter specification).
4. Remove the union bolt on the inlet manifold.
5. Release the union nut on the E.G.R. valve.
6. Slacken the lock nut securing the valve to the manifold.
7. Unscrew (anti-clockwise) the valve from the manifold.

continued

Refitting

8. Screw the valve into the exhaust manifold.
9. Leaving the bolt slack, fit the connecting pipe to the inlet manifold noting that copper washers are fitted both sides of the banjo.
10. Fit the pipe to the valve and tighten the nut.
11. Tighten the union bolt.
12. Tighten the valve locknut whilst holding the valve firmly to prevent the connecting pipe being strained.
13. Fit the vacuum pipe T piece (USA non Catalytic Converter specification) ensuring that the branch pipes are connected as follows:
    a. E.G.R. control valve on the carburetter to the E.G.R. valve.
    b. E.G.R. valve to depression side of the carburetter via the rear vapour trap.
14. Fit the air cleaner. 19.10.01.

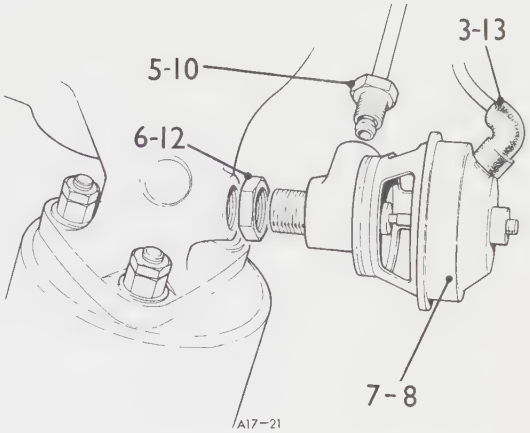

EXHAUST GAS RECIRCULATION CUT-OUT VALVE (USA CATALYTIC CONVERTER SPECIFICATION ONLY)

– **Remove and refit** 17.45.05

Removing

1. Disconnect the pipe from the valve.
2. Remove the screw and shake proof washer securing the valve bracket to the carburetter.
3. Remove the bracket and valve complete.

Refitting

4. Reverse instructions 1 to 3.

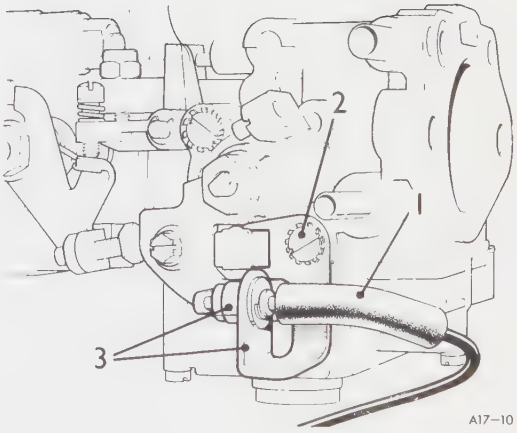

CATALYTIC CONVERTER

– Remove and refit **17.50.01**

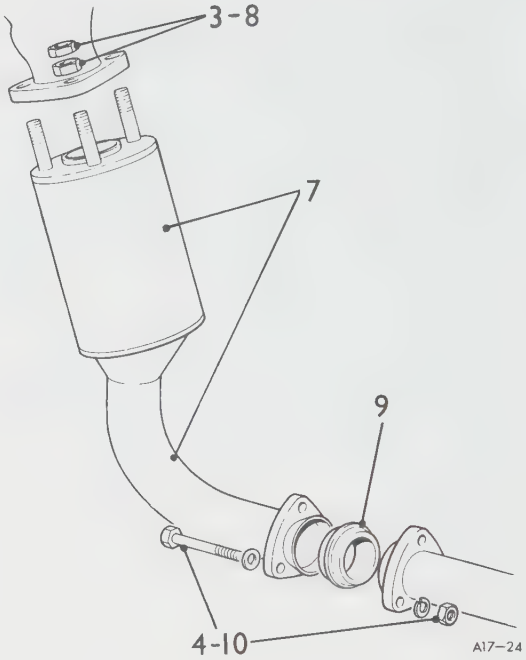

Removing

1. Place the car on a ramp.
2. Remove the air cleaner. 19.10.01.
3. Remove the three nuts and lock-nuts securing the converter to the exhaust manifold flange.
4. Raise the car and remove the three nuts and bolts securing the down-pipe to the main exhaust pipe.
5. Separate the two pipes and remove the Olive.
6. Lower the ramp and remove the two rear screws securing the engine R.H. valance.
7. Whilst moving the valance away from the engine withdraw the converter and down pipe assembly.

Refitting

8. Using a new gasket secure the converter to the manifold with the three nuts and lock-nuts tightening evenly.
9. Raise the ramp and assemble the down-pipe to the main exhaust pipe, applying P.B.C. grease to both faces of the olive.
10. Fit and evenly tighten the three retaining nuts and bolts.
11. Raise the ramp and secure the rear end of the engine valance with the two screws.

FUEL SYSTEM OPERATIONS

Air Cleaner (Twin SU Carburetters)
– remove and refit 19.10.01
– renew element 19.10.08

Air Cleaner (Single Stromberg Carburetters)
– remove and refit 19.10.01
– renew element 19.10.08

Automatic Choke (Stromberg Carburetters)
– remove and refit 19.15.38

Carburetter (Single Stromberg Auto choke)
– remove and refit 19.15.09

Carburetter (Single Stromberg Manual choke)
– remove and refit 19.15.09
– starter assembly remove and refit 19.15.52

Carburetter (Single Stromberg)
– tune and adjust 19.15.01

Carburetter (Twin SU)
– float chamber needle and seat – remove and refit 19.15.24
– overhaul 19.15.18
– piston and suction chamber – remove and refit 19.15.30
– tune and adjust 19.15.02
– remove and refit 19.15.11

Carburetter (Single Stromberg)
– diaphragm – remove and refit 19.15.35
– float chamber level – check and adjust 19.15.32
– float chamber needle valve – remove and refit 19.15.24

Deceleration and by-pass valve (Stromberg)
– adjust 19.15.01
– remove and refit 19.15.64

Fuel Pump
– clean filter 19.45.05
remove and refit 19.45.08

Fuel main filter – remove and refit 19.25.02

Fuel tank – remove and refit 19.55.01

Fuel filler cap assembly – remove and refit 19.55.08

Hose – filler to tank – remove and refit 19.40.19

Mixture control cable – remove and refit 19.20.13

FUEL SYSTEM OPERATIONS – continued

Throttle pedal – remove and refit 19.20.01

Throttle cable – (Twin SU installation)
– remove and refit 19.20.06

Throttle cable (Manual choke Stromberg)
– remove and refit 19.20.06

Throttle cable (Automatic choke Stromberg)
– remove and refit 19.20.06

AIR CLEANER (SINGLE STROMBERG USA CATALYTIC AND NON CATALYTIC SPECIFICATION)

– Remove and refit 19.10.01

Removing

1. Disconnect the emission control pipes from the clips attached to the air cleaner back plate.
2. Disconnect the hot air hose from the air cleaner intake.
3. Remove the two bolts, plain and rubber washers, securing the air cleaner to the carburetter.
4. Withdraw the air cleaner complete with the air temperature control unit.
5. Slacken the hose clip and remove the air temperature control unit.

Refitting

6. Reverse instructions 1 to 5 using a new gasket between the air cleaner and carburetter intake.

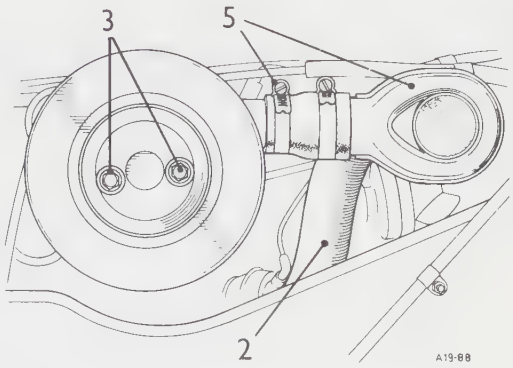

AIR CLEANER (TWIN SU)

– Remove and refit 19.10.01

Removing

1. Disconnect the two intake hoses.
2. Remove the four bolts and washers.
3. Remove the fuel pipe and withdraw the air cleaner complete with two gaskets.

Refitting

4. Reverse instructions 1 to 3, ensuring that new gaskets are fitted.

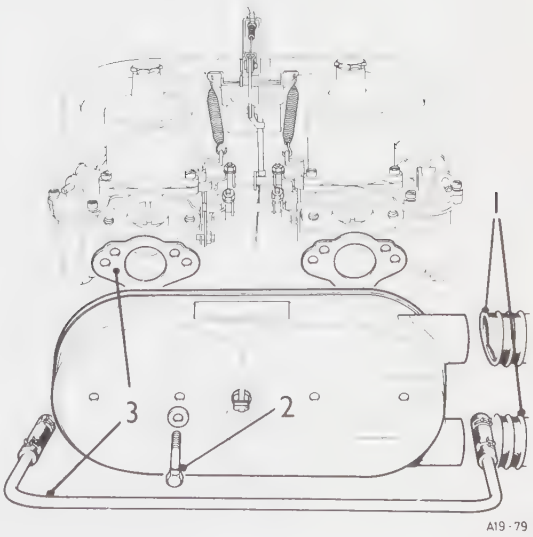

AIR CLEANER – RENEW ELEMENTS (TWIN SU)

– Remove and refit **19.10.08**

Removing

1. Remove the air cleaner assembly. 19.10.01.
2. Remove the bolt securing the cover-plate to the container.
3. Separate the cover-plate from the container.
4. Remove and discard the paper elements.

Refitting

5. Reverse instructions 1 to 4, ensuring:
   a. New elements are fitted.
   b. Gaskets and cover-plate seal are renewed if originals are unsatisfactory.

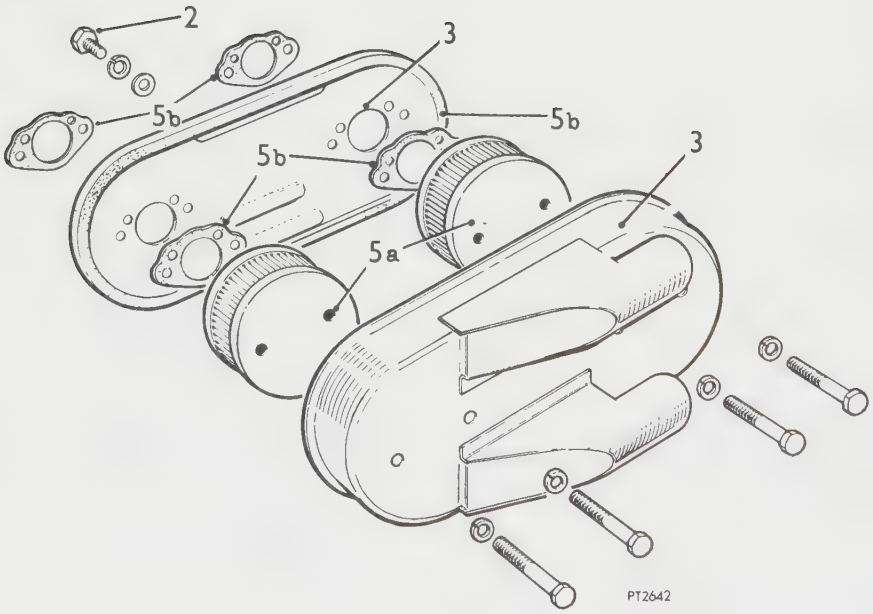

AIR CLEANER ELEMENT (U.S.A. SINGLE STROMBERG CATALYTIC and NON CATALYTIC CONVERTER SPECIFICATION)

– Renew **19.10.08**

1. Remove the air cleaner – omitting instruction 5. 19.10.01
2. Separate the air cleaner back plate from the container.
3. Remove the used element and rubber sealing rings.
4. Clean the back plate and container.
5. Assemble the new element and sealing rings into the container.
6. Fit the back plate ensuring that the peg on the container locates in the back plate slot.
7. Refit the air cleaner 19.10.01, using a new gasket.

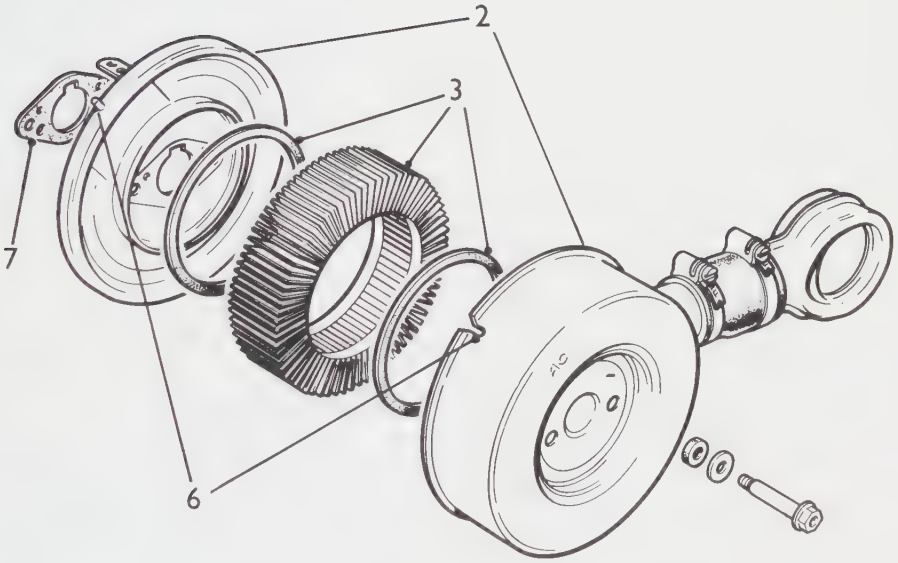

AHT 83

CARBURETTER (SINGLE STROMBERG)

– Tune and adjust 19.15.01

Special tools: Non dispersive infra-red exhaust gas analyser.
Mixture adjusting tool S353

CAUTION: To ensure compliance with the exhaust emission legislative requirements the following items MUST NOT be changed or modified in any way:

The fuel jet assembly.
The piston assembly.
The depression cover.

The following items must not be adjusted in service but should be replaced completely by factory-set units:

The piston assembly return spring.
The autochoke.

1. Run the engine until normal operating temperature is reached.

NOTE: During the course of the following instructions do not allow the engine to idle for longer than three minutes without a 'clear-out' burst of one minute duration at 2000 r.p.m.

Checking and adjusting idle speed

2. Start the engine and check that the idle speed is steady at 800 to 850 r.p.m.
3. If adjustment is required turn the throttle adjusting screw clockwise until the correct idle speed is obtained. Stop the engine.

Checking and adjusting the C.O. at idle

4. Disconnect the air pump outlet hose at the diverter and relief valve, so that the air pump is vented to atmosphere.
5. Start the engine and check that the idle speed is 800 to 850 r.p.m.
6. Check and if necessary adjust the ignition timing.
7. Re-check the idle speed.
8. Insert the gas analyser probe as far as possible into the exhaust pipe.
9. Check the CO reading against the figure quoted on the emission control decal on the car.
10. Adjust the mixture if necessary – see mixture adjustment.
11. Check and if necessary adjust the idle speed.
12. Withdraw the analyser probe.
13. Stop the engine.
14. Connect the air pump outlet hose to the diverter and relief valve.

continued

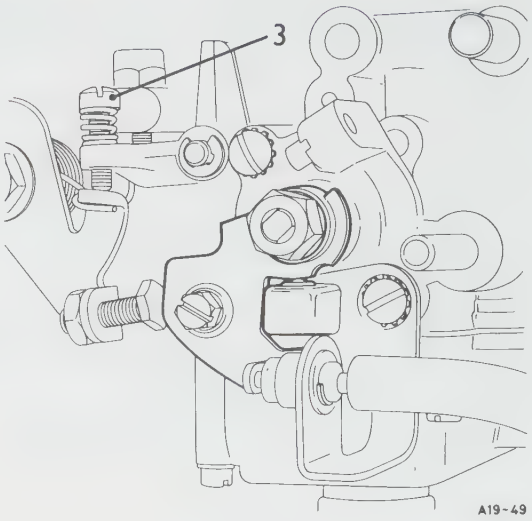

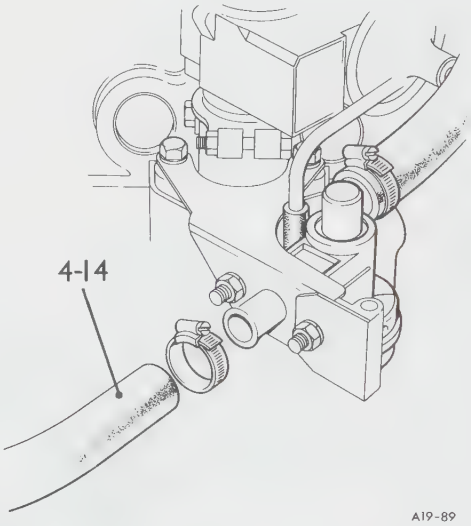

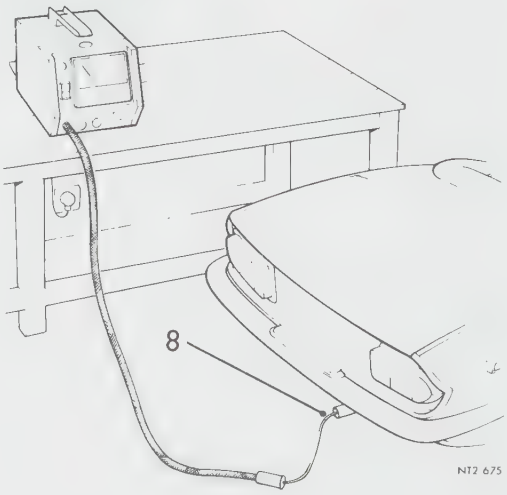

Mixture adjustment

15. If the CO reading is only just outside the permitted limits adjust the fine idle CO screw until the CO reading is correct.

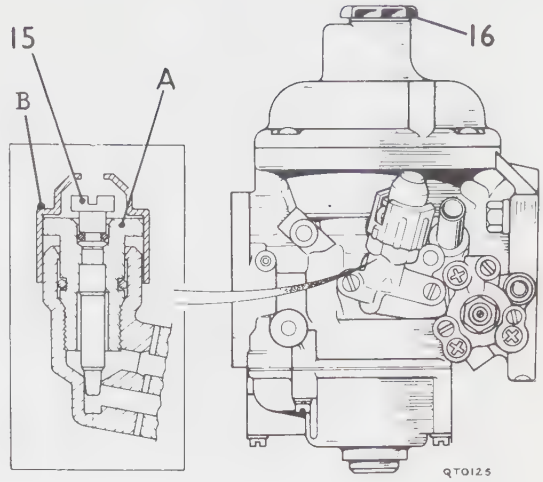

CAUTION: The setting must always be checked by means of a non-dispersive infra-red gas analyser.
Do not attempt to alter the course idle CO adjustment A. This is set at the factory and sealed with a plastic cap B.
For significant deviation outside the specified limits the following instructions should be carried out:

16. Maintain the engine at the normal running temperature and remove the piston damper.
17. Slowly insert tool S353 into the dashpot until the outer tool engages in the air valve and the inner tool engages the hexagon in the needle adjuster plug.

[**NOTE:** Tool S353 is also available under the designation Tool BLT 2010.]

18. Hold the tool firmly and turn the inner tool:
    a. Clockwise to enrich the mixture.
    b. Anti-clockwise to weaken.
19. Top-up the carburetter damper, ensuring that the special instructions in Section 10 are followed.
20. Recheck the CO reading and repeat instructions 16 to 19 until the CO reading is within the specified limits.

CAUTION: The outer tool must be correctly engaged and held otherwise the diaphragm may be damaged.

continued

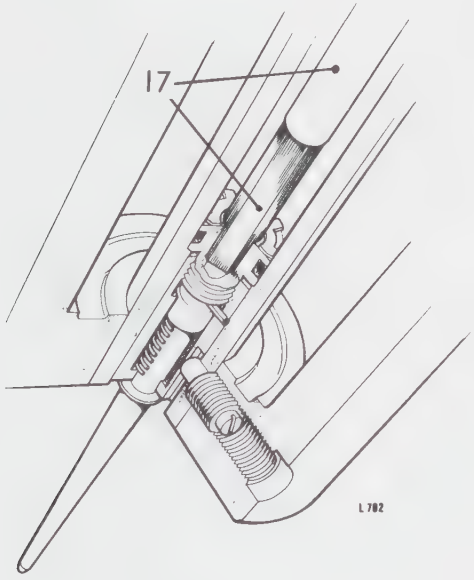

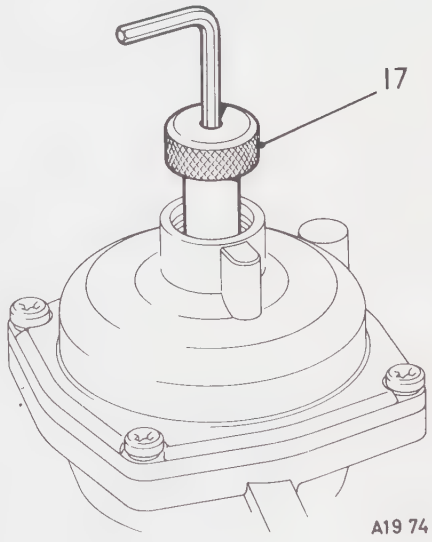

Checking and adjusting deceleration and by-pass valve

21. Maintain the engine at normal running temperature.
22. Remove the vacuum pipe from the distributor and place a finger over the end of the pipe.
23. The valve is operating correctly if the engine idle speed increases to approximately 1300 r.p.m.
24. Should the valve be 'floating' and therefore out of adjustment, the engine idle speed will increase rapidly to approximately 2000 to 2500 r.p.m.
25. If adjustment is necessary leave the vacuum pipe disconnected from the distributor and plug the end.
26. Start the engine and with the spring clip in position turn the by-pass valve screw clockwise until the engine increases abruptly to approximately 2000 to 2500 r.p.m. The valve is now 'floating' on its seat.
27. Turn the adjustment screw anti-clockwise until the engine speed falls to approximately 1300 r.p.m.
28. Using the throttle, suddenly increase the engine speed and immediately release the throttle. The engine speed should drop to approximately 1300 r.p.m. If not the valve is still 'floating'. Re-adjust repeating instructions 25 to 28.
29. When correct adjustment of the by-pass valve has been achieved, turn the valve adjustment screw anti-clockwise half a turn to finally seat the valve.
30. Unplug the vacuum pipe and connect it to the distributor.

CAUTION: The by-pass valve must be changed as a complete unit if renewal is necessary.

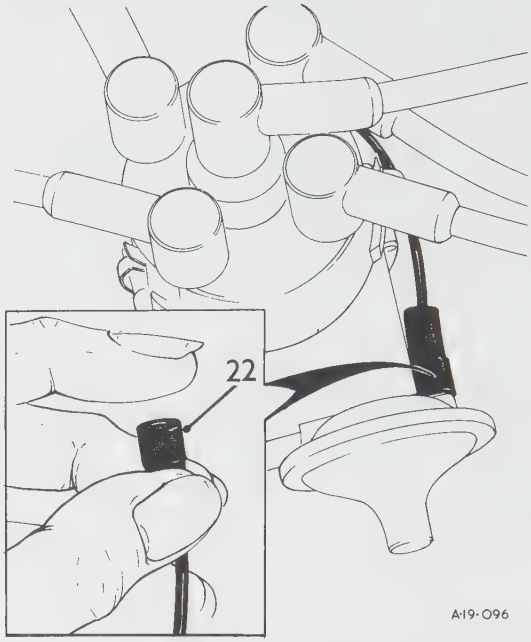

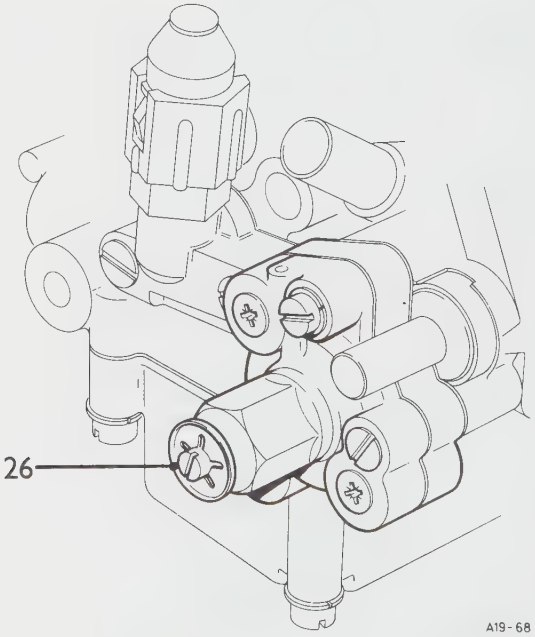

CARBURETTERS (TWIN SU INSTALLATION)

– Tune and adjust **19.15.02**

1. Remove the air cleaner. 19.10.02.
2. Check the throttle for correct operation ensuring that it does not stick.
3. Turn the fast idle adjusting screws anti-clockwise until well clear of the cams, and disconnect the mixture control cable at the trunnion (on the rear carburetter).
4. Turn the throttle adjusting screws until just clear of the throttle levers with the throttles closed, then turn the screws 1½ turns clockwise.
5. Raise the piston of each carburetter in turn (use the lifting pin if fitted) and check that it falls freely onto the carburetter bridge. If either piston shows any tendency to stick, remove and clean the piston and suction chamber. 19.15.30.
6. Lift and support the piston clear of the carburetter bridge so that the jet is visible.

   Note: if this is not possible, remove the suction chamber assembly.

7. Turn the jet adjusting nuts to bring the jets flush with the carburetter bridge.
8. Check that the needle shank is flush with the underside of the piston.
9. Turn the jet adjusting nuts down two turns.

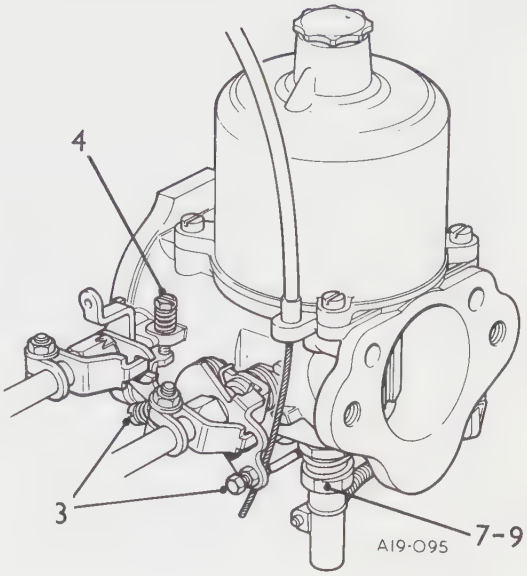

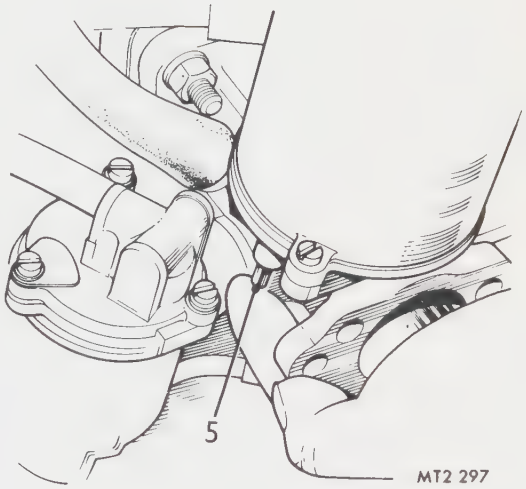

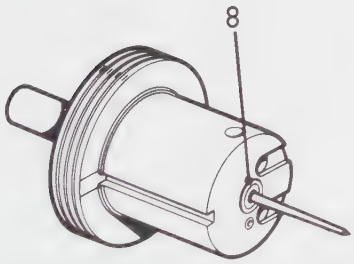

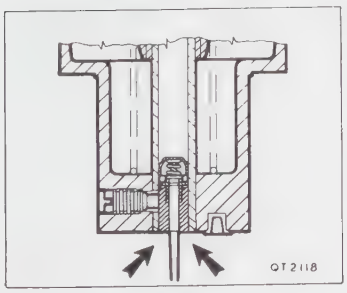

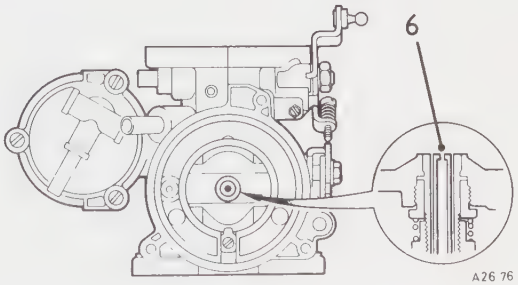

10. Check the piston damper oil level. See Section 10.
11. Start the engine and run at a fast idle speed until it attains normal running temperature and continue for a further five minutes.
12. Increase the engine speed to 2500 r.p.m. for thirty seconds.
13. Using an exhaust gas analyser insert the probe into the exhaust pipe in accordance with the manufacturers instructions.

    Note: Tuning can now commence, but if adjustments cannot be achieved within three minutes increase the engine speed to 2500 r.p.m. and then continue. Repeat this clearing procedure at three minute intervals until tuning is complete.
14. Slacken both clamping nuts and bolts on the throttle spindle interconnections.
15. Slacken both nuts and bolts on the jet control interconnections.
16. Using a balancing meter check the carburetters for balance and adjust by turning the throttle adjusting screws whilst maintaining the correct idling speed – see DATA.

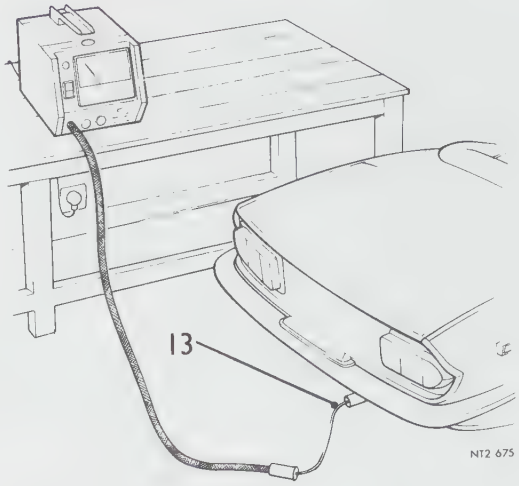

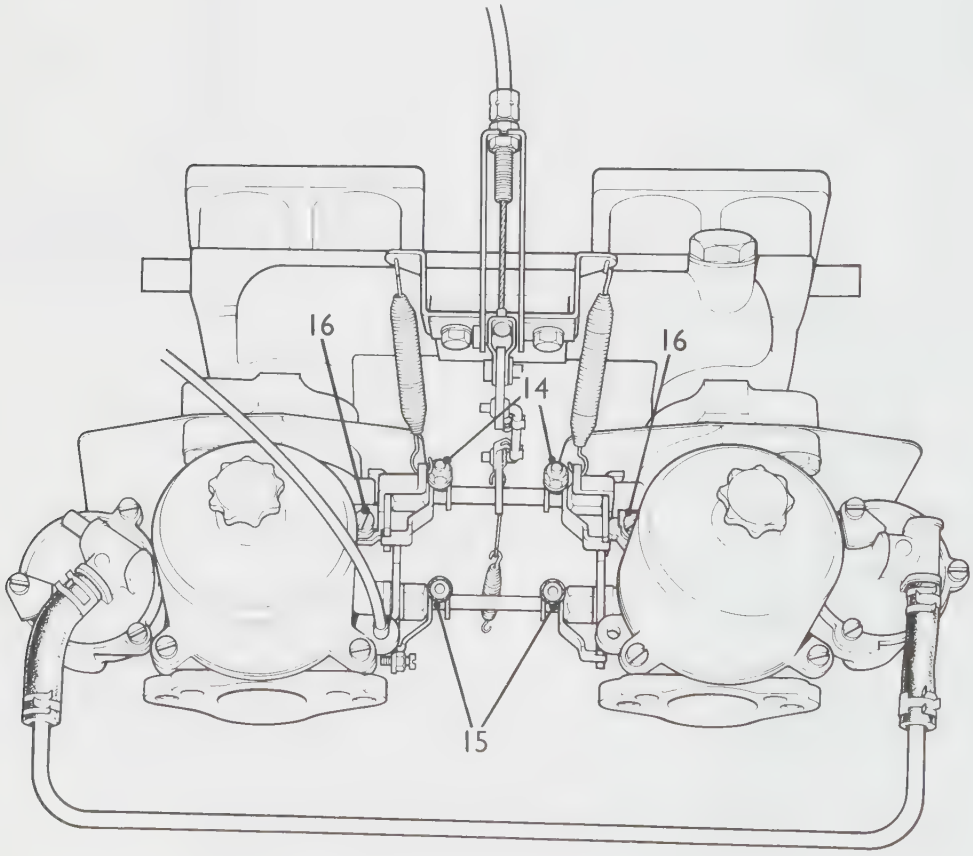

17. Turn the jet adjusting nut on each carburetter down to enrich or up to weaken the mixture by the same amount until the fastest speed is indicated on the tachometer.
18. Turn each adjusting nut up one flat at a time until the engine speed just commences to fall.
19. Turn the adjusting nuts down by the minimum amount until the fastest speed is regained.
20. Check the idle speed and adjust if necessary by turning the throttle adjusting screws by the same amount.
21. Check that the CO reading on the exhaust gas analyser is within the accepted limits at idling, see DATA.
22. If the CO reading falls outside the limits, reset both jet adjusting nuts by the minimum amount necessary.

    Note: If an adjustment exceeding three flats or half a turn is required to achieve this the carburetters must be removed and overhauled.
23. Set the throttle interconnection clamping levers until the lever pins rest on the lower arm of the forks.
24. Insert feeler gauges to the value of 0.030 to 0.035 in (0.75 – 0.89 mm) between the heel of the fulcrum plate and manifold and tighten the clamping nuts and bolts while holding the lever pins on the lower arm of the forks.
25. Check that following the previous instruction a clearance exists between the lever pins and the bottom arm of the forks. The actual clearance is not important but it must be the same on both forks.
26. Using the balancing meter re-check the carburetters for balance by running the engine at 1500 r.p.m.
27. With the fast idle cams against their respective stops tighten the jet control interconnection clamps, so that both cams begin to move simultaneously.
28. Connect the mixture control cable to the trunnion and ensure that there exists a $\frac{1}{16}$ in (1.5 mm) free movement of the cable before the cams move.

    Note: The mixture control cable is connected to the rear carburetter although the illustration shows it on the front.
29. Pull out the mixture control knob until the linkage is about to move the jet.
30. Using the balancing meter to ensure equal adjustment turn the fast idle adjusting screws to give the correct fast idle speed – see DATA – and tighten the lock nuts.
31. Fit the air cleaner. 19.10.02.

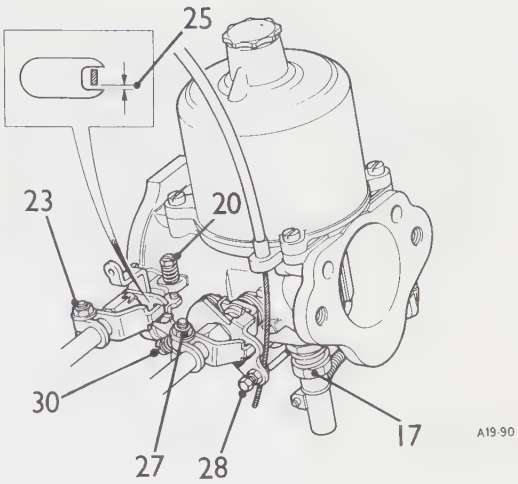

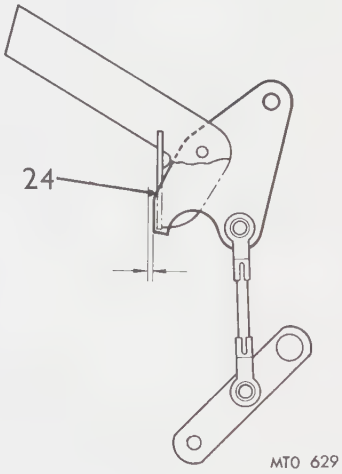

DATA

Idling speed	650 to 850 r.p.m.
Fast idling speed	1100 to 1300 r.p.m.
CO level at idling speed	2.5 to 4.5%

CARBURETTER (USA NON CATALYTIC CONVERTER SPECIFICATION – MANUAL CHOKE STROMBERG CARBURETTER)

– Remove and refit **19.15.09**

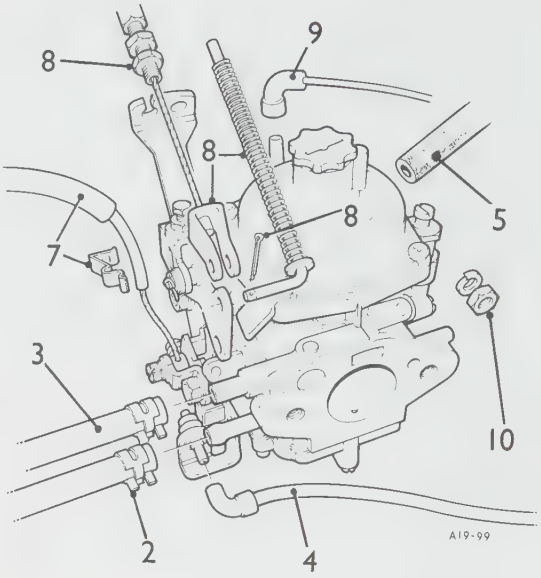

Removing

1. Remove the air cleaner. 19.10.01.
2. Disconnect the fuel feed pipe at the carburetter.
3. Disconnect the carburetter float chamber vent pipe to the adsorption canister. See 17.00.04.
4. Disconnect the vacuum pipe from the EGR control valve.
5. Disconnect the hose from the carburetter to the breather pipe. See 17.00.04.
6. Disconnect the vacuum hose from the carburetter to the front vapour trap.
7. Disconnect the mixture control cable. See 19.20.13.
8. Disconnect the throttle cable. See 19.20.06.
9. Disconnect the vacuum hose from the carburetter to the rear vapour trap.
10. Remove the two nuts and spring washers securing the carburetter to the inlet manifold.
11. Withdraw the carburetter.
12. Remove the asbestos packing.

Refitting

13. Clean the carburetter and manifold mating faces and fit the asbestos packing.
14. Fit the carburetter and secure with the two nuts and spring washers and tighten evenly to the correct torque figure, see Section 06.
15. Reverse instructions 1 to 9.

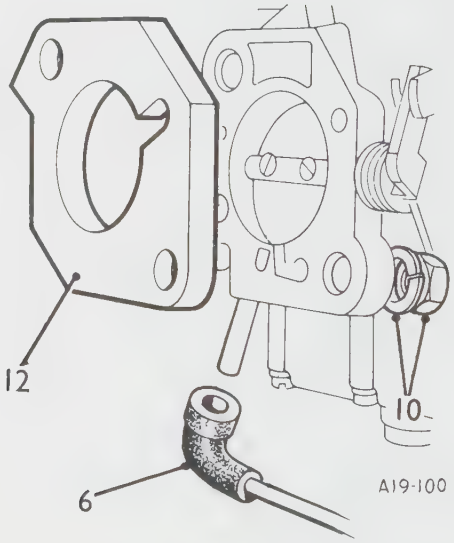

CARBURETTER (USA CATALYTIC CONVERTER SPECIFICATION – AUTOMATIC CHOKE STROMBERG CARBURETTER)

– Remove and refit 19.15.09

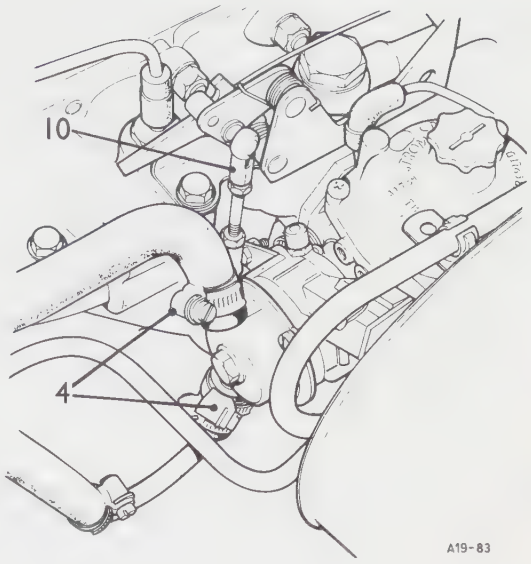

Removing

1. Disconnect the battery.
2. Drain the cooling system. 26.10.01.
3. Remove the air cleaner. 19.10.01.
4. Disconnect, from the carburetter autochoke, the inlet and outlet water hoses.
5. Disconnect the emission and evaporative control hoses from the pipes.
6. Disconnect float chamber vent hose.
7. Disconnect the fuel pipe to the carburetter.
8. Disconnect the vacuum pipe to the rear vapour trap.
9. Disconnect the vacuum pipe to the front vapour trap.
10. Disconnect the throttle at the vertical link.
11. Disconnect the engine breather pipe to the carburetter.
12. Remove the two nuts plain and spring washers securing the carburetter to the manifold.
13. Remove the carburetter.
14. Remove asbestos packing.

Refitting

15. Clean the carburetter and manifold mating faces.
16. Fit the asbestos packing.
17. Fit the carburetter and secure with the two nuts plain and spring washers tightening evenly to the correct torque figure – see Section 06.
18. Reverse instructions 1 to 10.

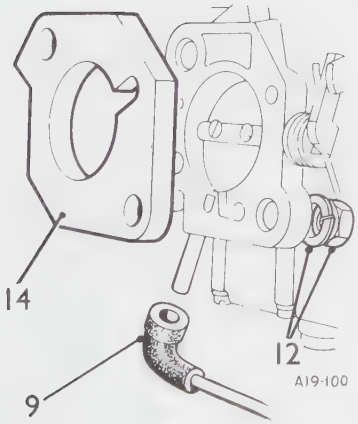

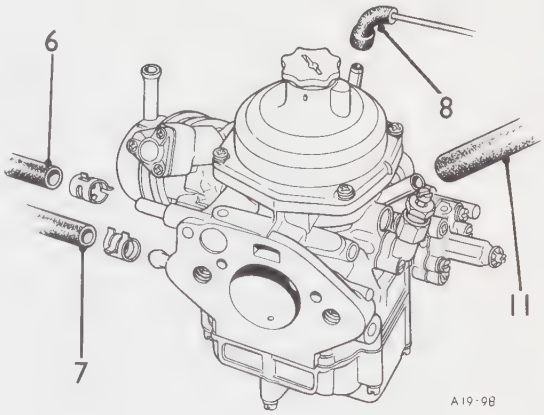

CARBURETTERS (TWIN SU INSTALLATION)

– Remove and refit 19.15.11

Removing

1. Remove the air cleaner. 19.10.01.
2. Disconnect the main fuel supply to the rear float chamber.
3. Disconnect the breather pipes.
4. Disconnect the throttle control vertical link rod.
5. Disconnect the two throttle return springs.
6. Disconnect the mixture control cable at the trunnion.
7. Disconnect the vacuum pipe to the distributor.
8. Disconnect the single throttle return spring.
9. Remove the four bolts (two per carburetter) securing the carburetters to the manifold.
10. Withdraw the carburetters complete with heat shield and gaskets.

Refitting

11. Reverse instructions 1 to 10 noting that one gasket is fitted to the carburetter face and the other to the manifold face with the heat shield between.

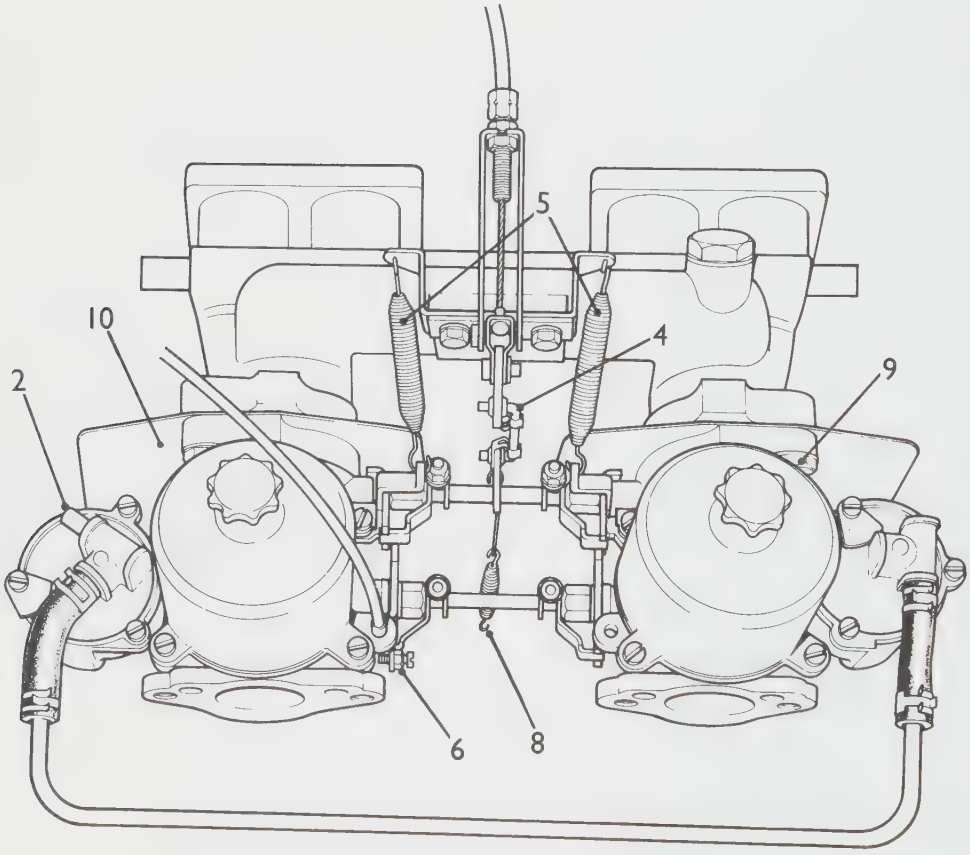

CARBURETTERS (TWIN SU INSTALLATION)

– Overhaul and adjust 19.15.17

– Carburetter – car set 19.15.18

Dismantling

[CAUTION: Please read the instructions thoroughly before you attempt carburetor repairs. If you lack the necessary skills or tools we suggest you leave such work to an Authorized Dealer or other qualified shop. Before taking a removed carburetor in for repair, thoroughly clean its exterior but do not undertake any disassembly.]

1. Remove the carburetter assembly. 19.15.11.
2. Thoroughly clean the outside of the carburetter.
3. Mark the suction chamber to ensure it is refitted to the same position on the body.
4. Remove the damper and its washer.
5. Unscrew the suction chamber securing screws and lift off the chamber.
6. Remove the piston spring.
7. Carefully lift out the piston assembly and empty the oil from the piston rod.
8. Remove the guide locking screw and withdraw the needle assembly, taking care not to bend the needle. Withdraw the needle from the guide and remove the spring from the needle.
9. Where fitted, push the piston lifting pin upwards, detach its securing circlip and washers and withdraw the pin and spring downwards.
10. Release the pick-up lever return spring from its retaining lug.
11. Support the plastic moulded base of the jet and remove the screw retaining the jet pick-up link and link bracket.
12. Unscrew the flexible jet tube sleeve nut from the float-chamber and withdraw the jet assembly. Note the gland, washer and ferrule at the end of the jet tube.
13. Remove the jet adjusting nut and spring.
14. Unscrew the jet locking nut and detach the nut and jet bearing; withdraw the bearing from the nut.

continued

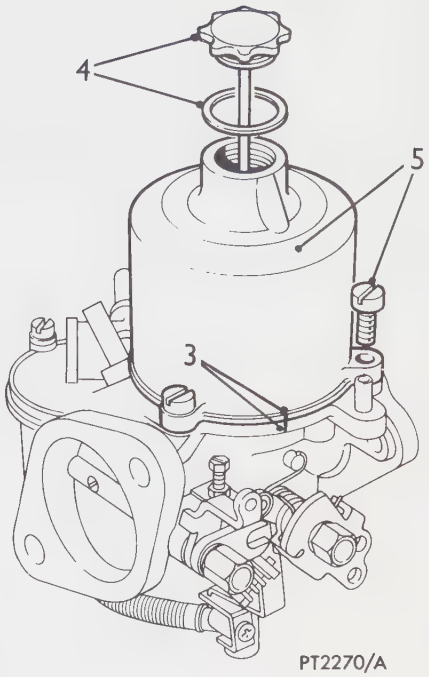

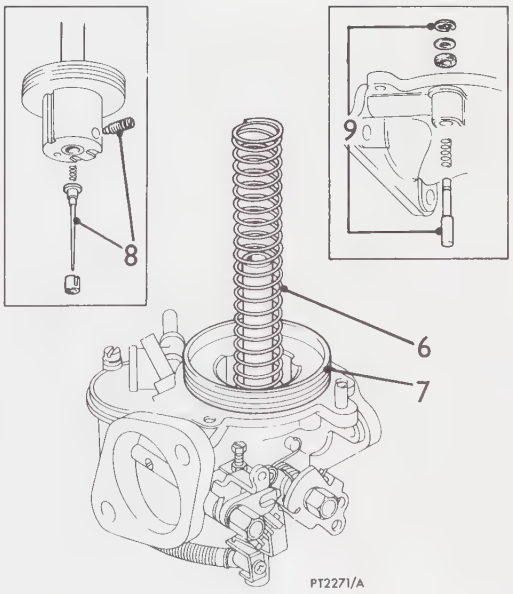

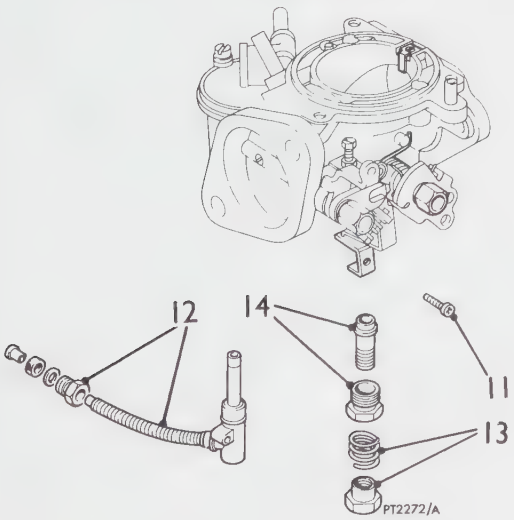

15. Unscrew and remove the lever pivot bolt and spacer.
16. Detach the lever assembly and return springs, noting the pivot bolt tubes and the location of the cam and pick-up lever springs.
17. Unscrew the securing bolt and remove the float chamber and spacer.
18. Mark the float chamber and lid location.
19. Remove the lid securing screws and detach the lid with its joint washer and float. Retain the part number tag.
20. Hold the float hinge pin at its serrated end and withdraw the pin and float.
21. Extract the float needle from its seating and unscrew the seating from the lid.
22. Close the throttle and mark the relative position of the throttle disc and the carburetter flange.
23. Press the split ends of the disc retaining screws together and remove the screws. Open the throttle and remove the disc from its slot in the throttle spindle.
24. Release the lock washer tabs securing the spindle nut; remove the nut and detach the fork lever, lever arm, washer and throttle spindle; note the location of the lever arm in relation to the spindle and carburetter body.

continued

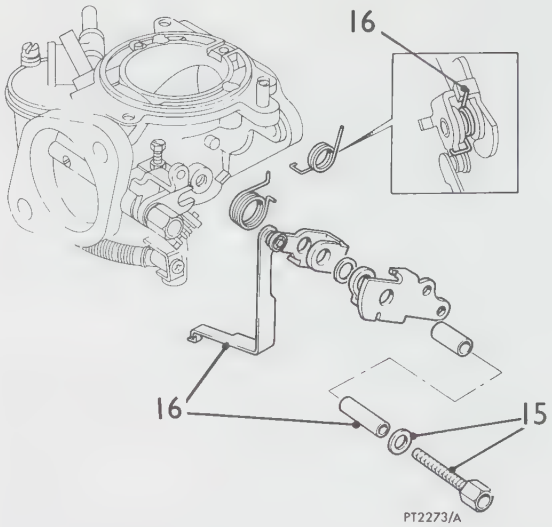

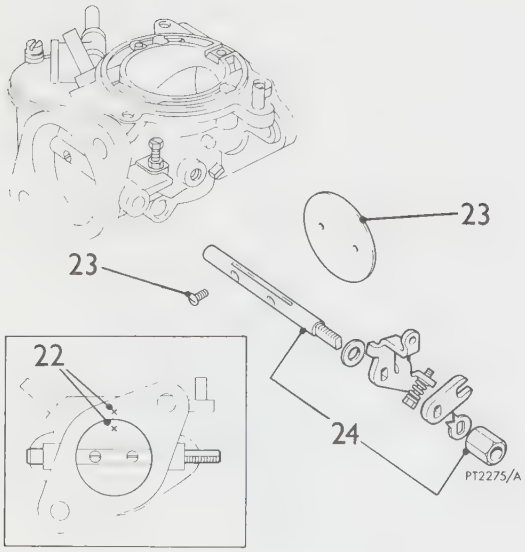

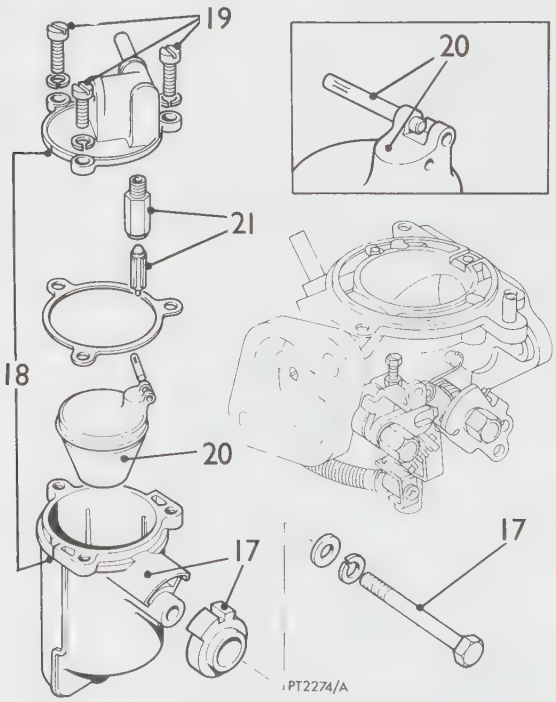

19.15.17 Sheet 2
19.15.18 Sheet 2

Inspecting

25. Examine the components as follows:
    a. Check the throttle spindle in the body for excessive play, and renew if necessary.
    b. Examine the float needle for wear; i.e. small ridges or grooves in the seat of the needle, and ensure that the spring-loaded plunger on the opposite end operates freely. Replace the needle and seating if necessary.
    c. Inspect all other components for wear and damage; renew unserviceable components.

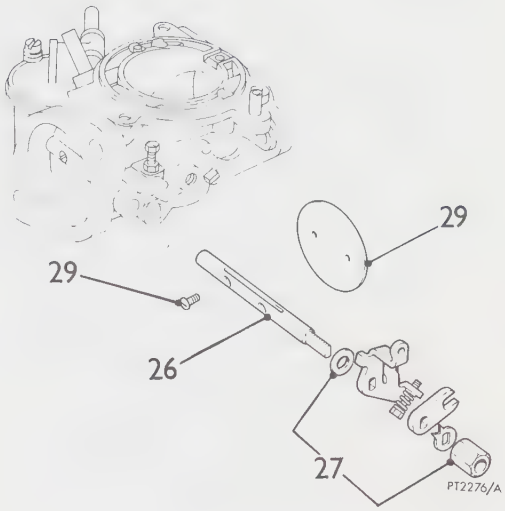

Reassembling

26. Refit the spindle to the body, with the countersunk holes in the spindle facing outwards.
27. Assemble the spacing washer, lever, fork lever, lock washer and securing nut, ensure that the idling stop on the lever is against the idling screw abutment on the body in the closed throttle position. Tighten the spindle nut and lock with the tab washer.
28. Insert the throttle disc into the spindle slot; note the markings for reassembling. Manoeuvre the disc in the spindle until the throttle can be closed, snap the throttle open and closed to centralize it in the bore of the carburetter.
29. Fit new disc retaining screws but do not fully tighten, check that the disc closes fully and adjust its position as necessary. Tighten the screws fully and spread their split ends just enough to prevent them turning.
30. Screw the seating into the float chamber lid; do not overtighten. Insert the needle coned-end first into the seating.
31. Refit the float to the chamber lid and insert the hinge pin.
32. Refit the float chamber lid with a new joint washer, noting the assembly markings, tighten the securing screws evenly.
33. Refit the float chamber to the body and tighten the retaining bolt.
34. Where fitted refit the piston lifting pin, spring and circlip. See instruction 9.
35. Clean fuel deposits off the suction chamber and piston with fuel or methylated spirit and wipe dry.

    CAUTION: Do not use an abrasive.

continued

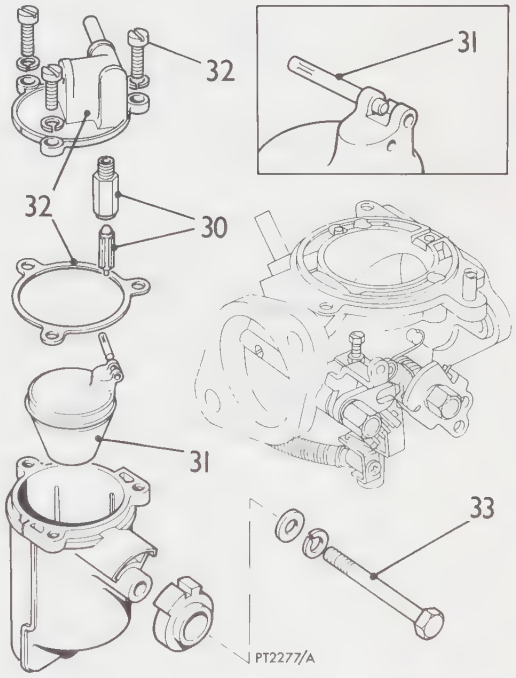

36. Check the operation of the suction chamber and piston (without the spring fitted) as follows:
    a. Refit the damper and washer to the suction chamber; temporarily plug the piston transfer holes with rubber plugs or Plasticine and insert the piston fully into the suction chamber.
    b. Secure a large flat washer to **one** of the fixing holes with a screw and nut so that it overlaps the bore.
    c. With the assembly upside-down, hold the piston and check the time taken for the suction chamber to fall the full extent of its travel. The time taken should be five to seven seconds; if this time is exceeded, check the piston and chamber for cleanliness and mechanical damage. Renew the assembly if the time taken is still not within these limits.
37. Fit the spring and guide to the needle and insert the assembly into the piston (with the shoulder of the needle flush with the underside face of the piston) and the slot in the guide positioned adjacent to the needle guide locking screw. Fit a new guide locking screw.
38. Check the piston key in the body for security.
39. Refit the jet bearing; fit and tighten the jet locking nut.
40. Refit the spring and jet adjustment nut; screw the nut up as far as possible.
41. Insert the jet into the bearing, fit the sleeve nut, washer and gland to the end of the flexible tube (if removed). The tube must project a minimum of $\frac{3}{16}$ in (4.8 mm) beyond the gland. Tighten the sleeve nut until the gland is compressed; over-tightening can cause leakage.
42. Refit the piston, spring and suction chamber to the body (noting the assembly marks) and tighten the securing screws evenly.
43. Reverse the procedure in 15 and 16.
44. Hold up the choke lever to relieve pressure on the jet pick-up link, refit the link bracket; support the end of the moulded jet and tighten the securing screw.
45. Screw the jet adjusting nut down two complete turns (12 flats) to provide the initial setting.
46. Refit the carburetters. 19.15.11.
47. Tune and adjust the carburetters. 19.15.02.

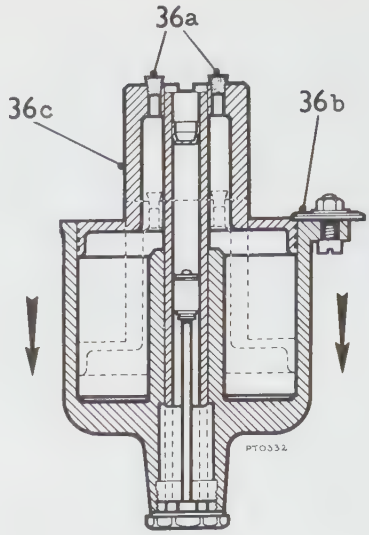

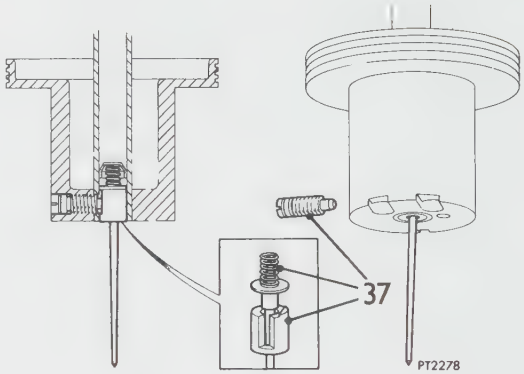

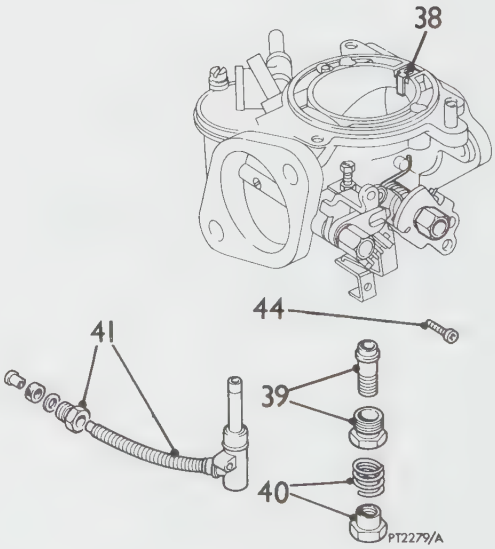

FLOAT CHAMBER NEEDLE VALVE (SINGLE STROMBERG)

– Remove and refit 19.15.24

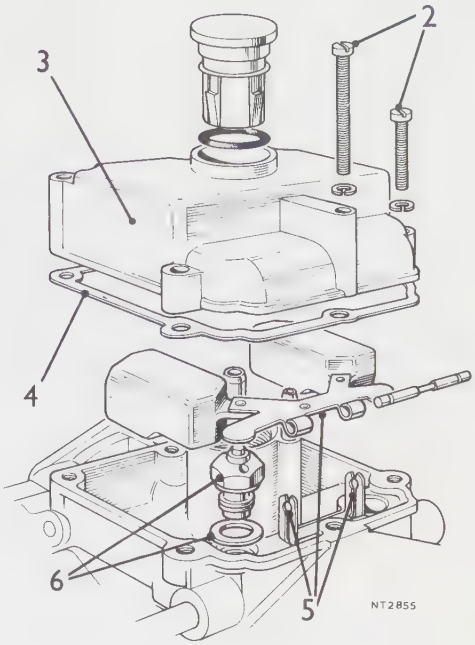

Removing

1. Remove the carburetters. 19.15.09.
2. Remove the six screws securing the float chamber to the body.
3. Remove the float chamber.
4. Remove the gasket.
5. Remove the float assembly by gently prising the spindle from the locating clips.
6. Remove the needle valve and washer.

Refitting

7. Fit the needle valve and renew the washer.
8. Fit the float assembly.
9. Check and if necessary, adjust the height of both floats. Instruction 5. 19.15.32.
10. Renew the gasket and refit the float chamber.
11. Refit the carburetters.

FLOAT CHAMBER NEEDLE AND SEAT (TWIN SU CARBURETTERS)

– Remove and refit 19.15.24

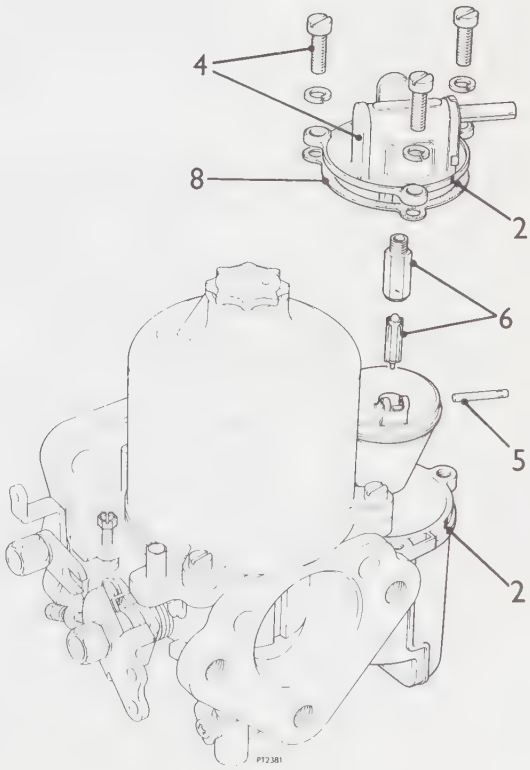

Removing

1. Disconnect the fuel hose from the float-chamber, or the two hoses from the rear carburetter.
2. Disconnect the breather hose from the carburetter.
3. Mark the lid and float-chamber for assembly.
4. Remove the lid securing screws and detach the lid.
5. Hold the float hinge pin at its serrated end and withdraw the pin and float.
6. Extract the float needle from its seating.

Inspecting

7. Examine the float needle for wear, i.e. small ridges or grooves in the seat of the needle, also check that the spring-loaded plunger on the opposite end operates freely. Renew the needle and seating if the needle is worn.

Refitting

8. Clean any sediment from the float-chamber, and fit a new joint washer if required.
9. Reverse instructions 1 to 6.

PISTON AND SUCTION CHAMBER (SU CARBURETTER)

– Remove, clean and refit 19.15.30

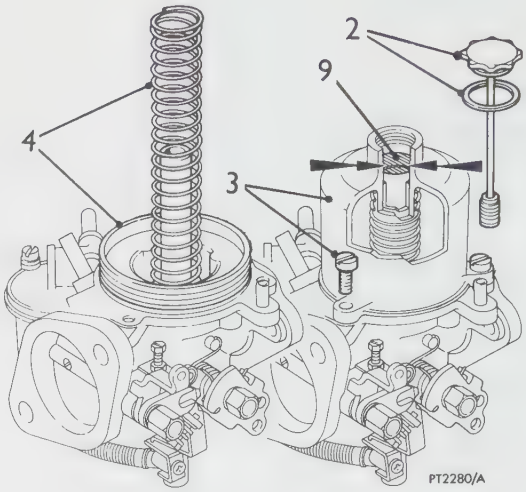

Removing

1. Mark the relative position of the suction chamber and the carburetter body.
2. Remove the damper and its washer.
3. Unscrew the suction chamber securing screws and lift off the chamber.
4. Remove the piston spring.
5. Carefully lift out the piston assembly and empty the oil from the piston rod.
6. Clean fuel deposits off the suction chamber and piston with fuel or methylated spirit and wipe dry.

   CAUTION: Do not use abrasives.
7. Check the operation of the suction chamber and piston (without the spring fitted) as follows:
   a. Refit the damper and washer to the suction chamber, temporarily plug the piston transfer holes with rubber plugs or Plasticine and insert the piston fully into the suction chamber.
   b. Secure a large flat washer to one of the fixing holes with a screw and nut so that it overlaps the bore.
   c. With the assembly upside-down, hold the piston and check the time taken for the suction chamber to fall the full extent of its travel. The time taken should be five to seven seconds, if this time is exceeded, check the piston and chamber for cleanliness and mechanical damage. Renew the assembly if the time taken is still not within these limits.

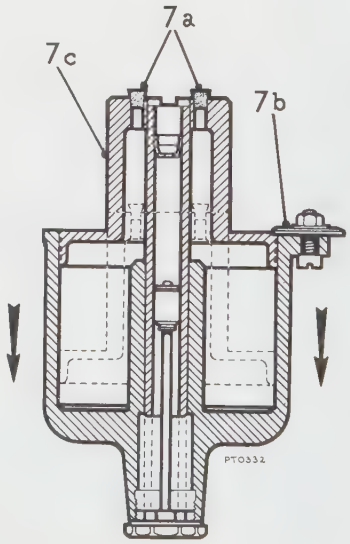

Refitting

8. Refit the piston, spring and suction chamber to the carburetter (noting the assembly marks) and tighten the screws evenly.
9. Top up each piston damper with a recommended engine oil until the level is ½ in (13 mm) above the top of the hollow piston rod.
10. Refit each piston damper with its washer.

FLOAT CHAMBER LEVELS (SINGLE STROMBERG)

– Check and adjust 19.15.32

Check

1. Remove the carburetters. 19.15.09.
2. Remove the six screws securing the float chamber to the body. Instructions 2 and 3. 19.15.24.
3. Remove the float chamber.
4. Remove the gasket.
5. With the carburetter in the inverted position check the distance between the gasket face on the carburetter body to the highest point of each float.

NOTE: The height of both floats must be the same i.e. 0.625 to 0.627 in (16 to 17 mm).

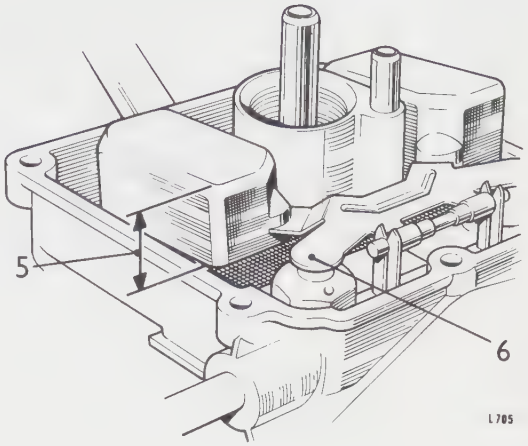

Adjust

6. Bend the tab that contacts the needle valve but ensure that it sits at right angles to the valve to prevent the possibility of sticking.
7. Fit a new gasket and reverse instructions 1 to 3.

DIAPHRAGM (SINGLE STROMBERG)

– Remove and refit 19.15.35

Removing

1. Remove the air cleaner. 19.10.01.
2. Remove the four screws securing the top cover to the carburetter body.
3. Lift off the top cover.
4. Remove the diaphragm spring.
5. Remove the diaphragm retaining plate.
6. Remove the diaphragm.

Refitting

7. Fit the diaphragm, locating the inner tag in the air valve recess.
8. Fit the retaining plate and ensure the correct diaphragm seating and tighten the screws.
9. Locate the diaphragm outer tag in the recess in the carburetter body.
10. Fit the top cover and evenly tighten the screws.
11. Check and if necessary top up damper – see special instructions, Section 10.
12. Fit the air cleaner. 19.10.01.

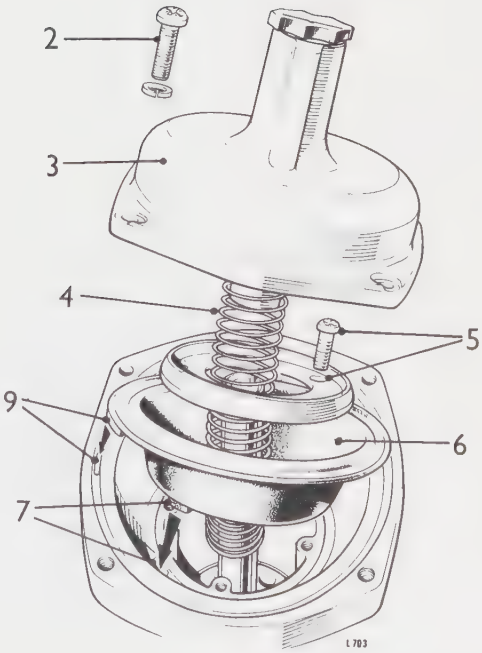

AUTOMATIC CHOKE (SINGLE STROMBERG)

– Remove and refit 19.15.38

CAUTION: The automatic choke (auto choke) must only be renewed as a complete unit.

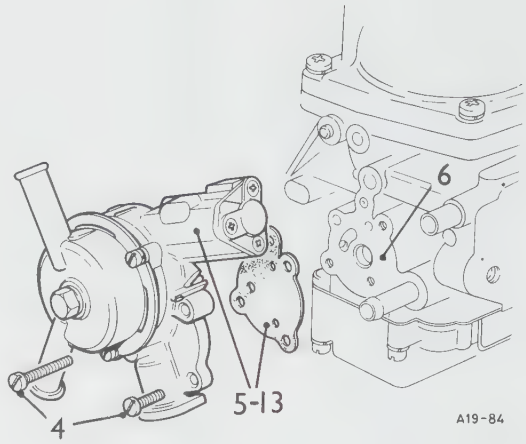

Removing

1. Remove the air cleaner.
2. Remove the carburetter from the engine.
3. Open the throttle and prevent closure by inserting a suitable stop (plastic, rubber or soft wood) between the throttle bore and butterfly.
4. Remove the three retaining screws securing the auto choke to the carburetter, noting that the lower screw is shorter.
5. Lift off the auto choke and gasket.

Refitting

6. Clean the carburetter and auto choke mating faces.
7. Remove the central bolt and washer on the water jacket and remove:
   a. The water jacket.
   b. The rubber sealing ring.
8. Remove the three screws and spring washers retaining the clamp ring.
9. Remove the clamp ring.
10. Carefully remove the finned aluminium heat mass, ensuring that the attached temperature sensitive bi-metal coil does not become strained.
11. Remove the heat insulato ·.
12. Fit a new gasket to the carburetter.
13. Fit the auto choke to the carburetter tightening the retaining screws progressively and evenly to 40–45 in lb (46–52 cm kg). Note the lower screw is shorter.

continued

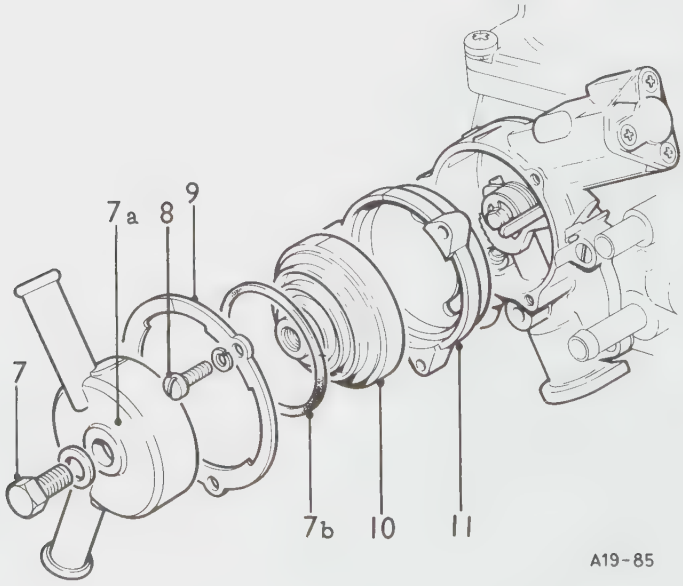

14. Adjust the fast idle screw until the gap between the base circle of the cam and the fast idle pin is within 0.020 in (0.50 mm) dimension A.
15. Position the heat insulator ensuring that the bi-metal lever protrudes through the slot in the insulator.

    NOTE: Provided the auto choke is in the fully 'ON' position, this insulator can only be fitted in one position; the back of it locating in the auto choke body and the three holes aligned with the threaded holes in the starter body.

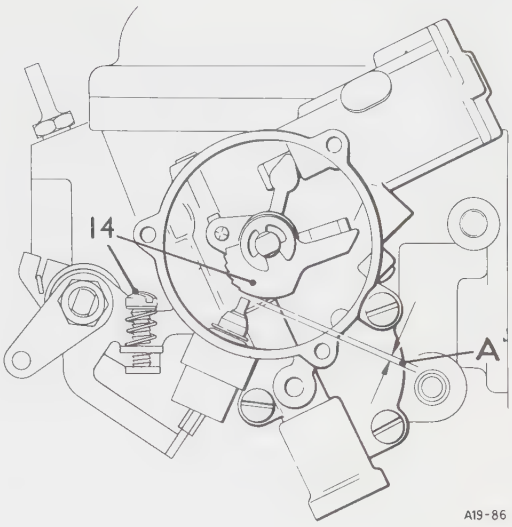

16. Carefully position the aluminium heat mass with the fins facing outwards and in such a way that the rectangular loop on the outer end of the temperature sensitive bi-metal coil fits over the bi-metal lever.
17. Without lifting the heat mass from its location (this is necessary to prevent the rectangular loop disengaging from the bi-metal lever) rotate it in both directions 30° to 40° ONLY and in both cases it should spring back to its static position. If not repeat instruction 18.
18. Fit the clamp ring locating it with the three screws and spring washers, but leaving the screws slack.
19. Rotate the heat-mass in an anti-clockwise direction to align the scribed line on its outermost edge with the datum mark on the insulator and auto choke body. Whilst holding it in this position evenly tighten the clamp ring retaining screws to lock the heat mass in this position.

    CAUTION: It should only be necessary to turn the heat mass through some 30° to 40°. Excessive rotation must be avoided to prevent permanent damage being caused to the temperature sensitive coil.

20. Fit the sealing ring.
21. Fit the water-jacket leaving the centre retaining bolt slack until the carburetter is fitted to the engine so that the water jacket may be rotated to line-up with the water pipes.
22. Refit the carburetter to the engine.
23. Connect up the water pipes to the water jacket and tighten the centre retaining bolt.
24. Check and if necessary top-up damper – see special instructions in Section 10.
25. Operate the throttle before attempting to start the engine to enable the auto-choke to reset itself.
26. Fit the air cleaner.
27. Start the engine and run until normal operating temperature is reached.
28. Adjust the engine idle speed setting screw to give an idling speed of 800 to 850 r.p.m.
29. When the engine is cold check and if necessary top-up the cooling system.

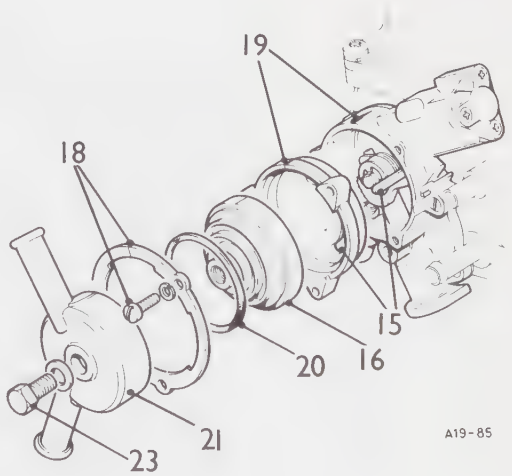

STARTER ASSEMBLY (MANUAL CHOKE STROMBERG CARBURETTER)

– Remove and refit **19.15.52**

CAUTION: This component must only be renewed as a complete unit.

Removing

1. Disconnect the mixture control cable.
2. Disconnect the vacuum pipe from the E.G.R. control valve.
3. Remove the two screws securing the starter assembly to the carburetter body.
4. Remove the exhaust gas recirculation cut-out valve.
5. Withdraw the starter assembly.

Refitting

6. Clean the carburetter and starter mating faces.
7. Reverse instructions 1 to 5.

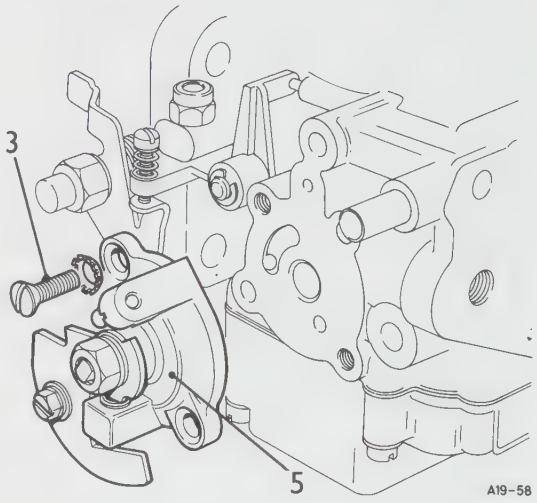

DECELERATION AND BY-PASS VALVE (STROMBERG CARBURETTER)

– Remove and refit **19.15.64**

CAUTION: This component must only be renewed as a complete unit.

Removing

1. Remove the two cheese headed screws and the single countersunk slotted screw (not cross slotted) securing the by-pass valve assembly to the carburetter.
2. Withdraw the valve assembly complete.
3. Remove the gasket.

Refitting

4. Clean the carburetter and valve assembly mating faces.
5. Using a new gasket fit the assembly to the carburetter.
6. Check and if necessary adjust the deceleration and by-pass valve, 19.15.01 instructions 21 to 30.

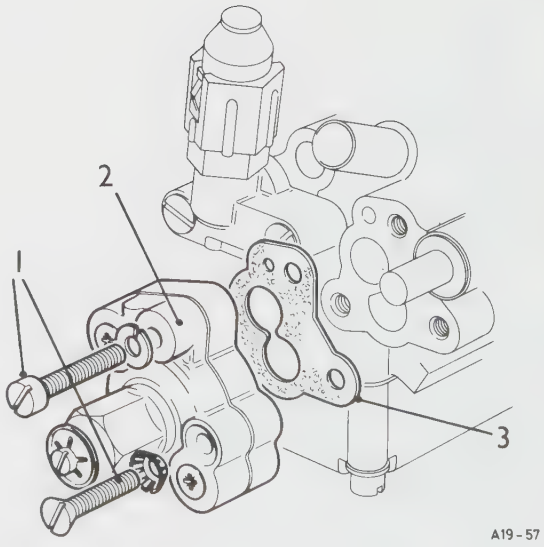

THROTTLE PEDAL

– Remove and refit 19.20.01

Removing

1. Remove the cable retaining clip.
2. Lift out the exposed inner throttle cable from the fork end of the pedal.
3. Remove the two bolts complete with plain and spring washers securing the pedal bracket to the bulkhead.
4. Remove the bracket, and pedal assembly.
5. Remove the nut, bolt and plain washer securing the pedal to the bracket.
6. Remove the pedal and return spring.

Refitting

7. Reverse instructions 1 to 6, ensuring:
   a. The return spring is positioned so that the pedal returns positively.
   b. The cable clip is correctly positioned so that the inner cable is gripped and cannot slip out.
   c. That the pedal stop is adjusted so that it does not inhibit the opening of the throttle fully.

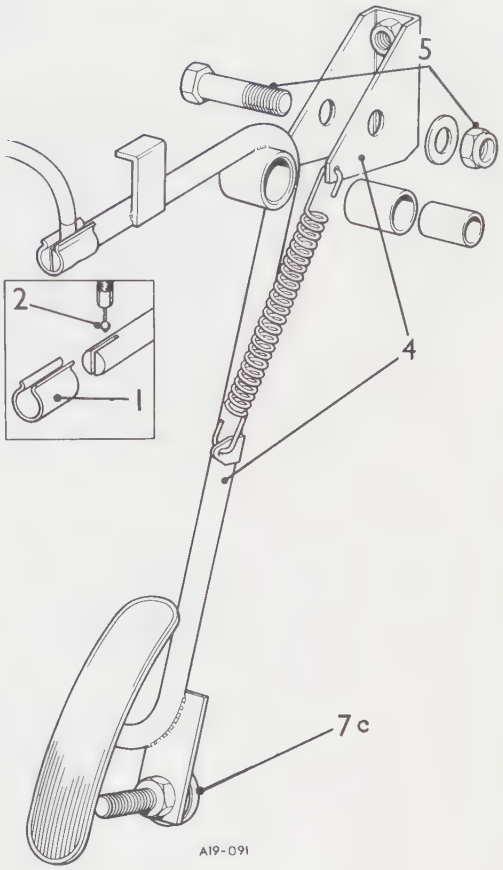

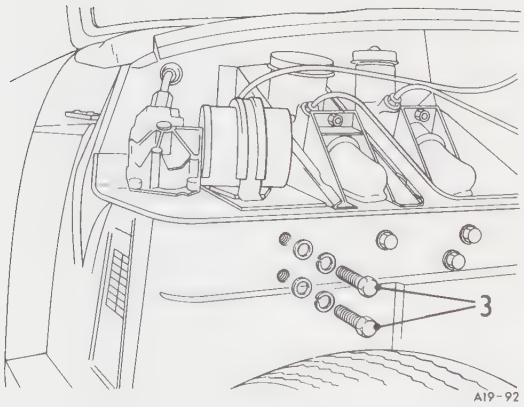

THROTTLE CABLE (SU TWIN CARBURETTERS, UK AND EUROPEAN SPECIFICATION)

– Remove and refit 19.20.06

Removing

1. Remove the cable retaining clip from the throttle pedal.
2. Withdraw the exposed end of the inner cable from the fork end of the throttle pedal.
3. Pull the outer cable complete with inner cable from the bulkhead.
4. Remove the cotter pin from the linkage clevis pin.
5. Withdraw the clevis pin complete with washer.
6. Slacken the cable adjuster locknut.
7. Screw the lower adjuster nut off the end of the cable.
8. Remove the inner and outer cable complete through the slot in the adjuster bracket.

Refitting

9. Reverse instructions 1 to 8, ensuring:
   a. The cable clip on the pedal is correctly fitted so that the cable will not slip out of the fork.
   b. The cable is not kinked or subjected to sharp bends.
   c. Cable tension is adjusted so that the heel of the fulcrum plate is just touching the machined face of the manifold.

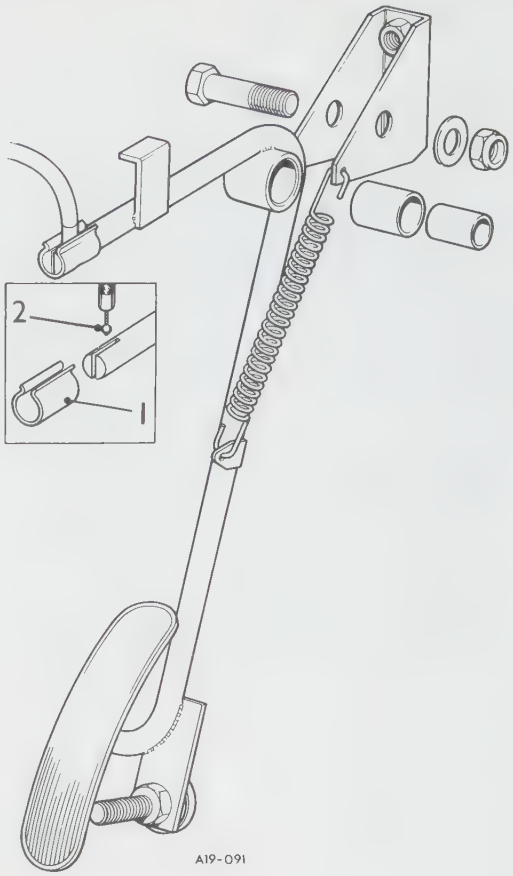

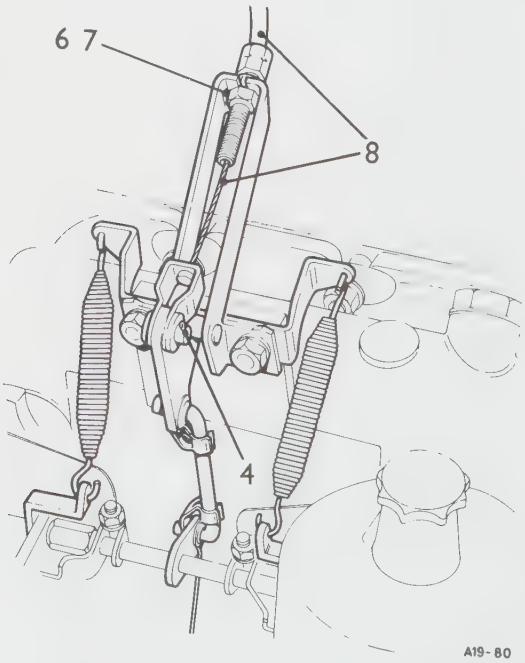

THROTTLE CABLE (MANUAL CHOKE – STROMBERG CARBURETTER)

– Remove and refit 19.20.06

Removing

1. Remove the cable retaining clip from the throttle pedal.
2. Withdraw the exposed end of the inner cable from the fork end of the throttle pedal.
3. Pull the outer cable complete with inner cable from the bulkhead.
4. Remove the split pin from the spring loaded rod.
5. Withdraw the rod and spring.
6. Screw the lower adjuster nut off the end of the adjuster thread.
7. Remove the throttle cable complete through the slot in the adjuster bracket.

Refitting

8. Reverse instructions 1 to 7 ensuring:
   a. The cable clip on the pedal is correctly fitted so that the cable cannot slip out of the fork.
   b. The cable is not kinked or subjected to sharp bends.
   c. The cable is adjusted so that there is $\frac{1}{16}$ in (1.6 mm) free movement.

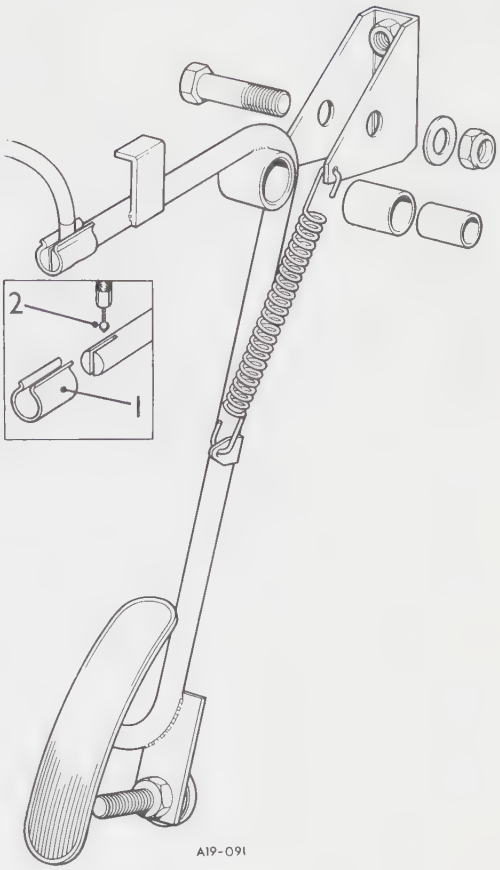

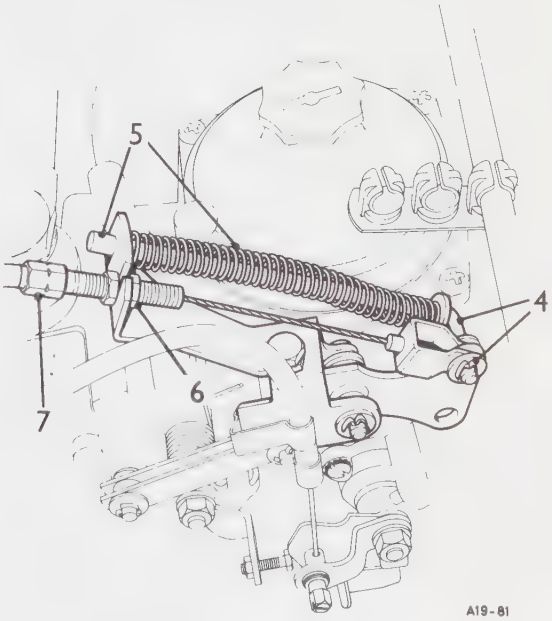

THROTTLE CABLE (AUTOMATIC CHOKE – STROMBERG CARBURETTER)

– Remove and refit 19.20.06

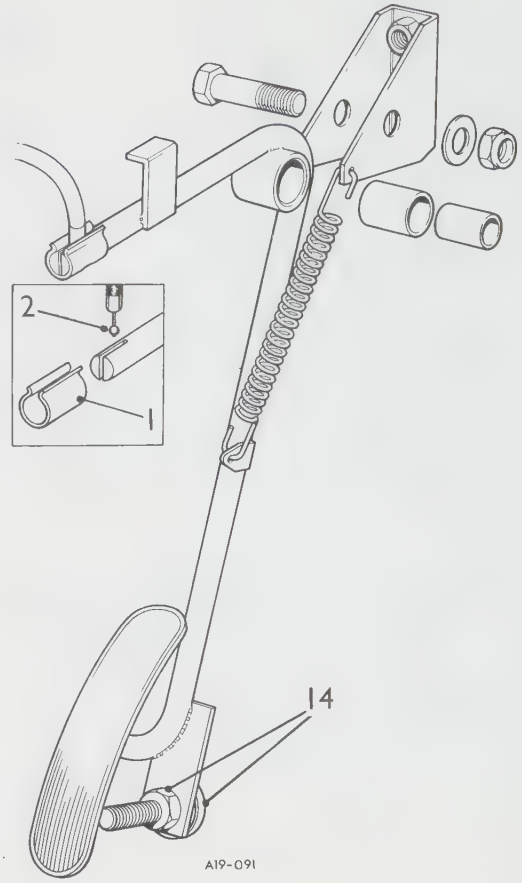

Removing

1. Remove the cable retaining clip from the throttle pedal.
2. Withdraw the exposed end of the inner cable from the throttle pedal.
3. Pull the outer cable complete with inner cable from the bulkhead.
4. Detach the inner cable nipple from the throttle linkage.
5. Unscrew the inner adjustment nut from the adjuster and remove the cable adjuster from the bracket.
6. Release the cable from the rocker cover clips and remove from the car.

Refitting and adjusting

8. Start the engine and run until it attains normal running temperature as indicated by the temperature gauge on the facia.
9. With the engine running disconnect the link rod from the linkage.
10. Set up the carburetter for correct running.
11. Attach the link rod to the linkage and adjust its length until there is a minimum gap at A between the roller and progression lever of 0.010 in (0.25 mm) and maximum gap of 0.190 in (4.82 mm).
12. Reverse instructions 1 to 6.
13. Adjust the cable to take up any slack at C.
14. Check and if necessary adjust the accelerator stop to ensure full throttle opening.

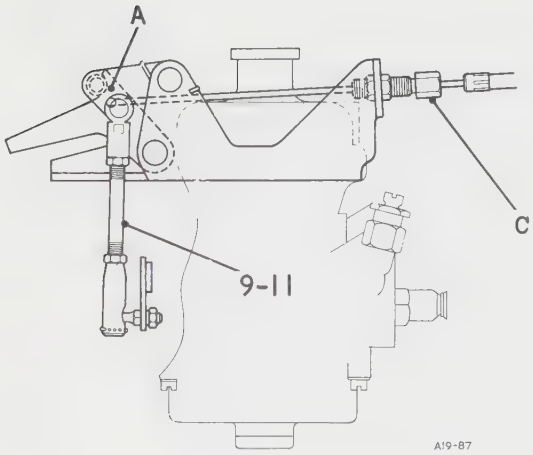

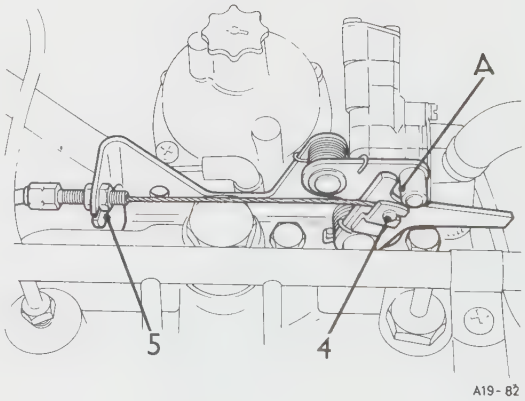

MIXTURE CONTROL CABLE

– Remove and refit 19.20.13

Removing

1. Disconnect the inner cable from the carburetter at the trunnion on the rear carburetter (SU).

Illustration A SU Carburetter.

Illustration B Stromberg Carburetter.

2. Separate the inner cable from the outer by pulling the control knob on the control panel.
3. Carefully unscrew and remove the ferrule securing the outer cable to the control panel.
4. Remove the outer cable from the control panel.
5. Drop the outer cable below the control panel and pull the cable through the bulkhead grommets into the interior of the car, and remove.

Refitting

6. Feed the control panel end of the outer cable below the panel and through the bulkhead grommets.
7. Secure the outer cable to the control panel and with the ferrule and locknut.
8. Feed the inner cable into the outer cable from the interior of the car.
9. Connect the inner cable to the carburetter.
10. Allow $\frac{1}{16}$ in (1.6 mm) free movement of cable before the linkage is about to move the cam.

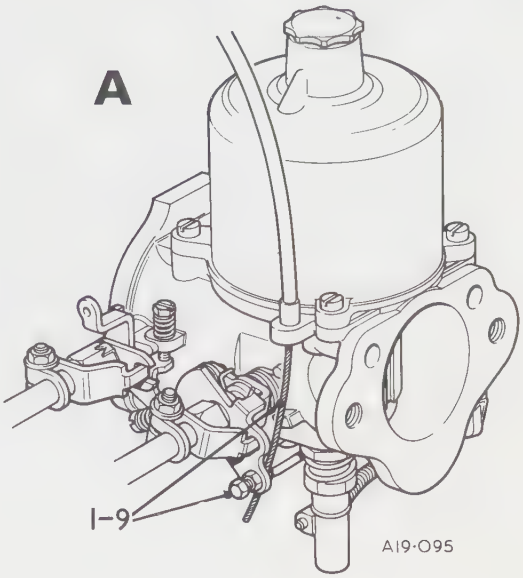

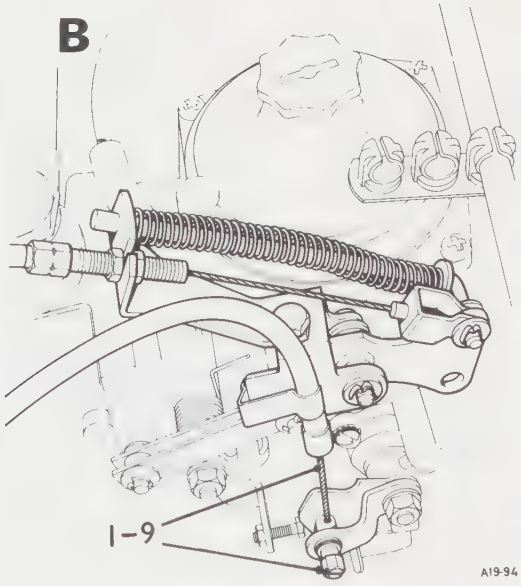

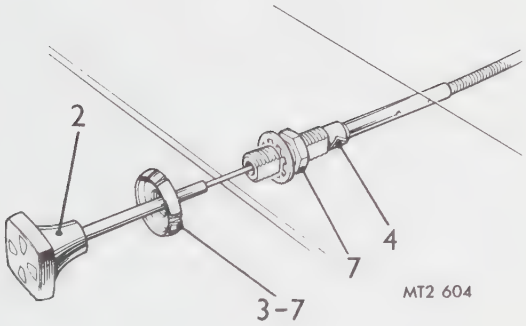

FUEL MAIN FILTER (USA CATALYTIC AND NON-CATALYTIC CONVERTER SPECIFICATION)

– Remove and refit 19.25.02

Removing

1. Disconnect the battery.
2. Remove luggage compartment rear trim pad.
3. Disconnect the fuel feed pipes from the filter and remove the filter.

   CAUTION: If the filter is not to be renewed or refitted immediately, plug the pipe ends to prevent loss of fuel and ingress of foreign matter.

Refitting

4. If necessary, unplug the pipe ends and fit the filter ensuring that the end of the filter with the word 'IN', is uppermost.
5. Reverse instructions 1 and 2.

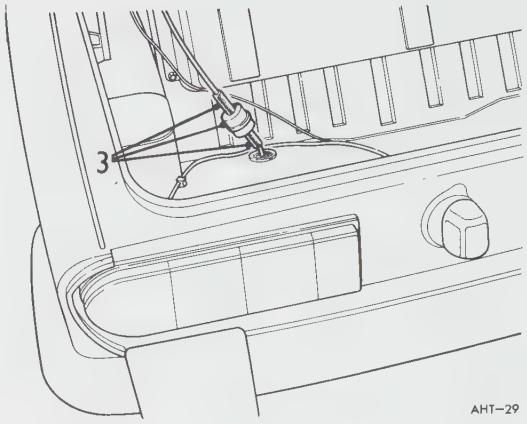

HOSE – FILLER TO TANK

– Remove and refit 19.40.19
Which includes fuel filler cap assembly – remove and refit 19.55.08

Removing

1. Disconnect the battery.
2. Remove the rear compartment trim pad. 76.13.20.
3. Slacken the lower clip securing the hose to the tank.
4. Withdraw the filler cap assembly and hose.
5. Slacken the hose clip and remove the hose from the filler assembly.

Refitting

6. Fit the filler hose to the filler assembly and tighten the clip.
7. Fit the filler and hose to the tank and secure with the lower clip.
8. Reverse instructions 1 and 2.

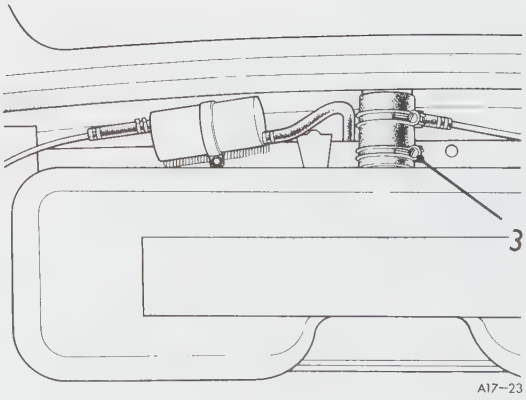

FUEL PUMP

– Clean filter 19.45.05

1. Remove the dome retaining screw.
2. Lift off the dome.
3. Remove the sealing ring.
4. Lift out the filter.
5. Clean sediment from the dome.
6. Clean and examine the filter and refit.
7. Fit a new sealing ring – if necessary.
8. Fit the dome and secure it with the screw and a new washer.

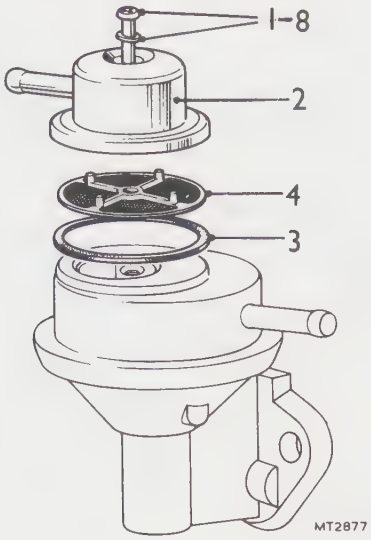

FUEL PUMP

– Remove and refit 19.45.08

Removing

1. Disconnect the pipe from the fuel tank to the pump inlet connection.
2. Disconnect the outlet pipe from the pump.
3. Remove the nuts securing the pump to the cylinder block.
4. Remove the pump.
5. Remove the gasket.

Refitting

6. Clean the pump and cylinder block mating faces.
7. Fit a new gasket.
8. Fit the pump ensuring that the actuating arm rides on top of the cam.
9. Fit and tighten the retaining nuts and spring washers.
10. Fit the fuel inlet and outlet pipes.

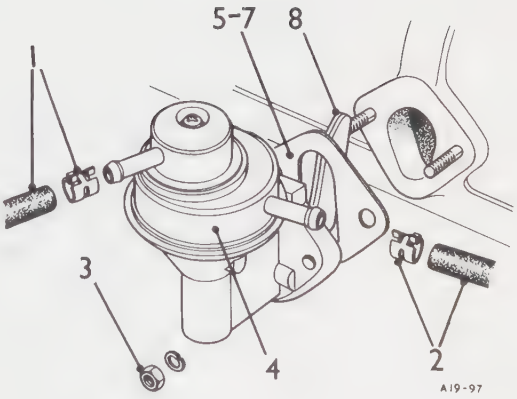

FUEL TANK

– Remove and refit 19.55.01

WARNING: This operation must only be carried out in minimum fire risk conditions.

Removing

1. Disconnect the battery.
2. Siphon fuel from tank.
3. Remove the luggage compartment rear trim panel.
4. Remove the filler hose. 19.40.19.
5. Disconnect the emission hoses from the vapour separator (USA Catalytic and non Catalytic Converter specification only).
6. Remove the boot rear trim panel.
7. Disconnect the Lucar connections to the tank unit and note positions for refitting.
8. Disconnect the fuel outlet pipe from the top of the tank.
9. Remove the five bolts and plain washers securing the tank to the body.
10. Withdraw the fuel tank.

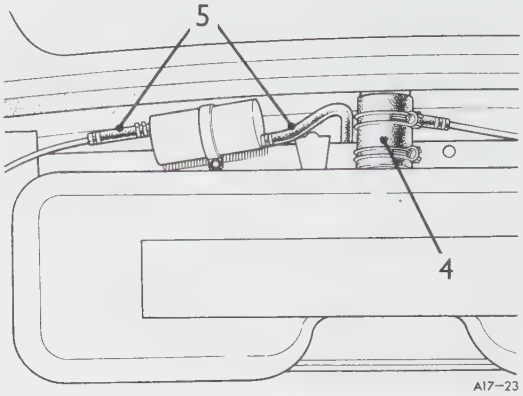

Refitting

11. Reverse instructions 1 to 10.

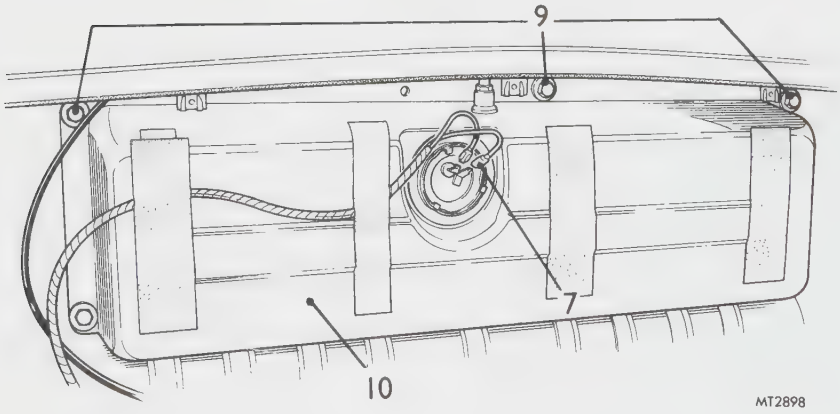

COOLING OPERATIONS

Coolant – drain and refill 26.10.01

Cooling system – pressure test 26.10.07

Fan – remove and refit 26.25.06

Fan belt
– remove and refit 26.20.07

Hoses – remove and refit
– cylinder head to heater valve 26.30.39
– heater to water pump pipe 26.30.18
– heater valve to heater . . . . . see 80.25.09
– inlet manifold to water pump pipe 26.30.17
– radiator top hose 26.30.01
– radiator bottom hose 26.30.07
– thermostat to inlet manifold 26.30.46

Radiator – remove and refit 26.40.01

Thermostat – remove and refit 26.45.01
– test 26.45.09

Viscous coupling – remove and refit 26.25.19

Water pump – remove and refit 26.50.01
– housing – remove and refit 26.50.03

COOLANT

– Drain and refill 26.10.01

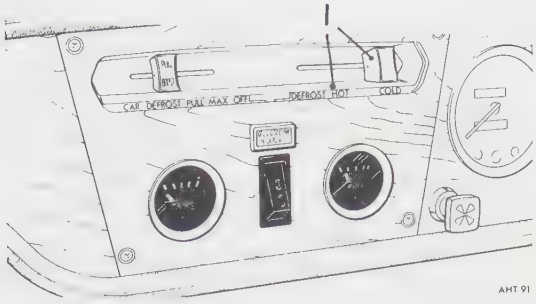

Draining

WARNING: This operation must only be carried out when the engine coolant is cold or tepid.

1. Set the heater control to the HOT position.
2. Remove the radiator cap.
3. Disconnect the bottom hose from the radiator.
4. Remove the cylinder block drain plug.
5. Allow the coolant to drain.

Filling

6. Fit the radiator bottom hose.
7. Fit the cylinder block drain plug using a new sealing washer.
8. Fill the radiator with clean water or with the correct concentration of an anti-freeze mixture of a recommended manufacture – see Section 09.
9. Fit the radiator cap and run the engine for approximately 2 minutes.
10. Stop the engine, remove the radiator cap and top-up as necessary to the bottom of the filler neck and refit the cap.
11. Top-up the expansion bottle to a half-full condition.

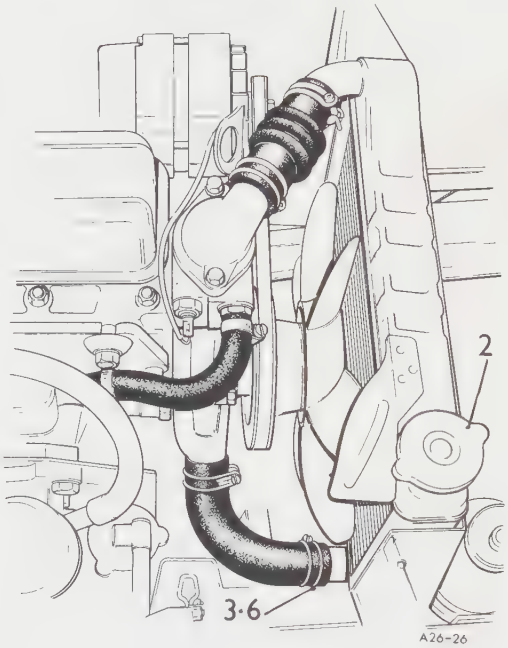

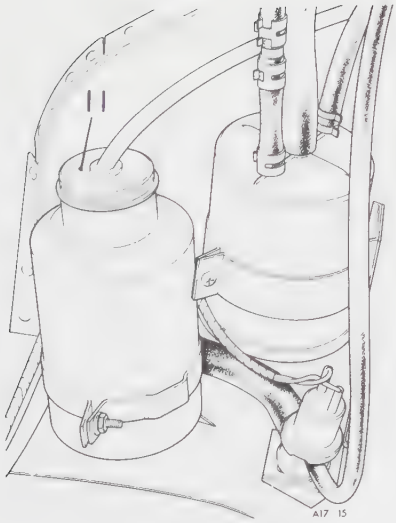

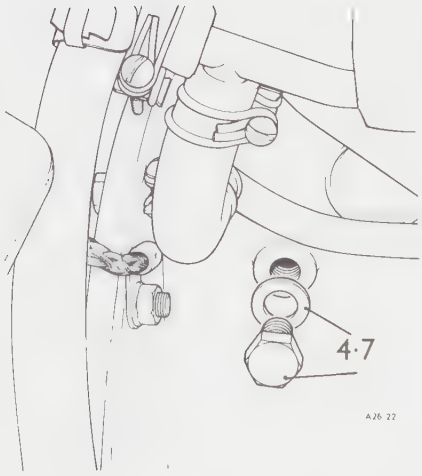

COOLING SYSTEM

– Pressure test 26.10.07

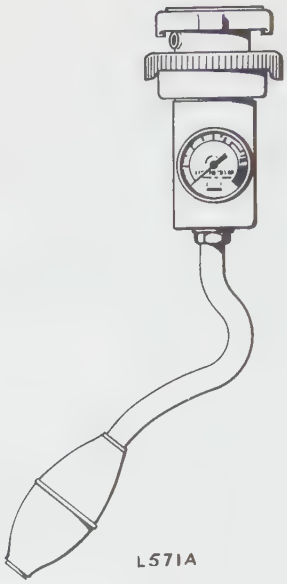

Radiator cap

1. Rinse radiator filler cap in clean water.
2. Whilst still wet fit the cap to the pressure tester.
3. Pump up pressure until the gauge pointer ceases to rise. Reject the filler cap if it will not register and maintain a pressure of 1 lb in^2 (0.06 kg/cm^2) below the figure stamped on the filler cap for a period of at least ten seconds without additional pumping.

Radiator

4. Warm the engine.
5. Remove the radiator filler cap.
6. Top up the cooling system if required.
7. Fit the pressure tester to the radiator.
8. Pump up to 13 p.s.i. (0.78 kg/cm^2).
9. Check that pressure will hold for approximately ten seconds without further pumping.
10. Check for leaks whilst system is pressurised.
11. If pressure falls within ten seconds and no leaks are visible, internal leakage is indicated.

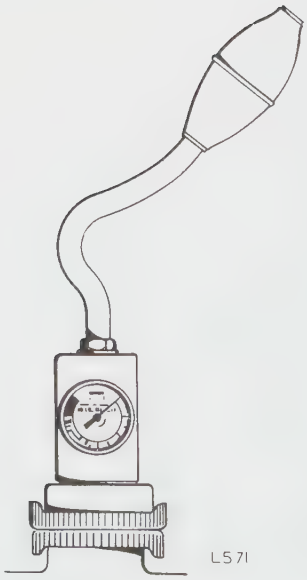

FAN BELT (UK AND EUROPEAN SPECIFICATION)

– Remove and refit 26.20.07

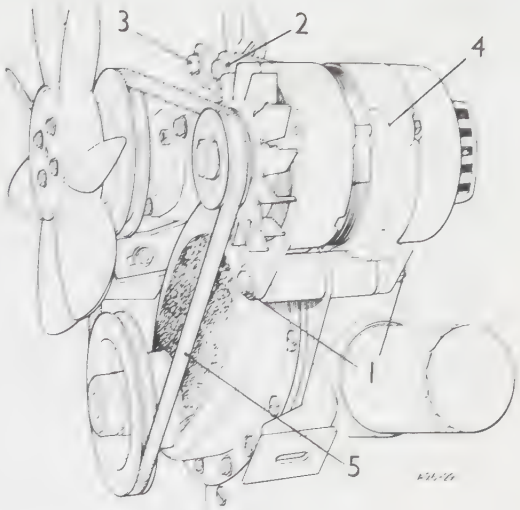

Removing

1. Slacken the pivot bolt and nut on the underside of the alternator.
2. Slacken the bolt securing the alternator to the adjusting plate.
3. Slacken the bolt securing the adjusting plate to the water pump housing.
4. Pivot the alternator towards the engine to release tension from the fan belt.
5. Release the fan belt from the alternator, water pump and engine crankshaft pulleys.

Refitting

6. Locate the fan belt on the engine crankshaft, water pump and alternator pulleys.
7. Adjust fan belt tension. 86.10.05.

FAN BELT (CATALYTIC AND NON CATALYTIC CONVERTER SPECIFICATION)

- Remove and refit 26.20.07

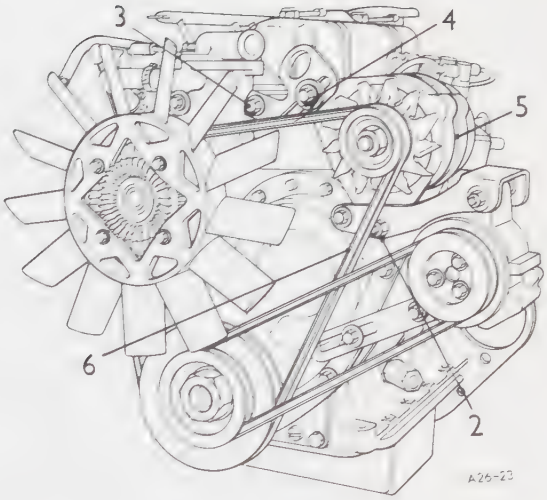

Removing

1. Remove the air pump drive belt. 17.25.15.
2. Slacken the alternator pivot bolt.
3. Slacken the bolt securing the adjusting plate to the water pump housing.
4. Slacken the bolt securing the alternator to the adjusting plate.
5. Pivot the alternator towards the engine to release the belt tension.
6. Remove the fan belt from the alternator, water pump and crankshaft pulleys.

Refitting

7. Locate the fan belt over the crankshaft, water pump and alternator pulleys.
8. Adjust the fan belt. 86.10.05.
9. Fit the air pump drive belt. 17.25.15.
10. Adjust the air pump drive belt. 17.25.13.

FAN BLADES

– Remove and refit 26.25.06

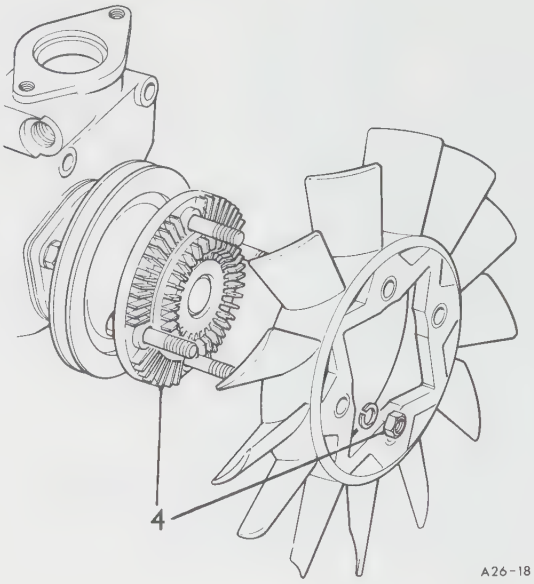

Removing

1. Disconnect the battery.
2. Drain the cooling system. 26.10.01.
3. Remove the water pump housing assembly complete with water pump and fan blades. 26.50.03.
4. Remove the four nuts and bolts securing the fan blades to the viscous coupling. (USA Catalytic and non Catalytic Converter specification) and remove the fan blades.
5. Remove the four bolts securing the fan blades to the water pump pulley and remove the fan blades. (UK and European specification).

Refitting

6. Reverse instructions 1 to 5.

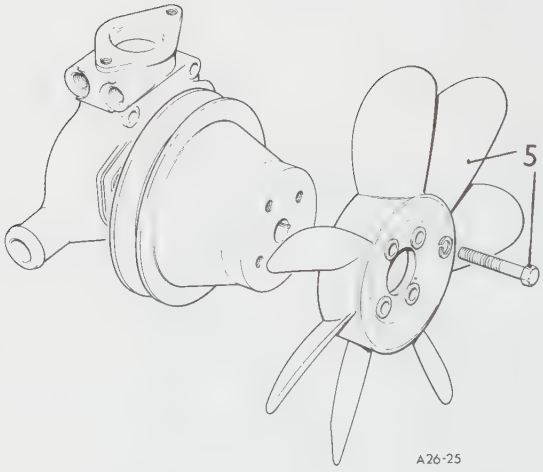

VISCOUS COUPLING (USA CATALYTIC AND NON CATALYTIC CONVERTER SPECIFICATIONS)

– Remove and refit 26.25.19

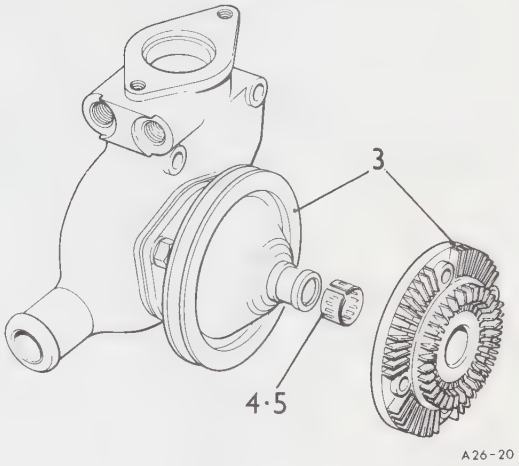

Removing

1. Remove the water pump housing assembly complete with fan blades. 26.50.03.
2. Remove the fan blades instruction 4. 26.25.06.
3. Press the viscous coupling from the water pump pulley.
4. Remove the tolerance ring.

Refitting

5. Fit a new tolerance ring on the water pump shaft.
6. Compress the tolerance ring with the fingers whilst locating the viscous coupling on the shaft.
7. Press the unit squarely on to the shaft keeping the tolerance ring compressed.
8. Fit the fan blades.
9. Fit the water pump housing assembly. 26.50.03.

HOSES

– Remove and refit

WARNING: The following operations must only be carried out when the coolant is cold or tepid.

Cylinder head to heater valve	**26.30.39**
Heater to water pump pipe	**26.30.18**
Heater valve to heater	**26.30.40**
Inlet manifold to water pump return hose	**26.30.17**
Radiator bottom hose	**26.30.07**
Radiator top hose	**26.30.01**
Thermostat to inlet manifold	**26.30.46**

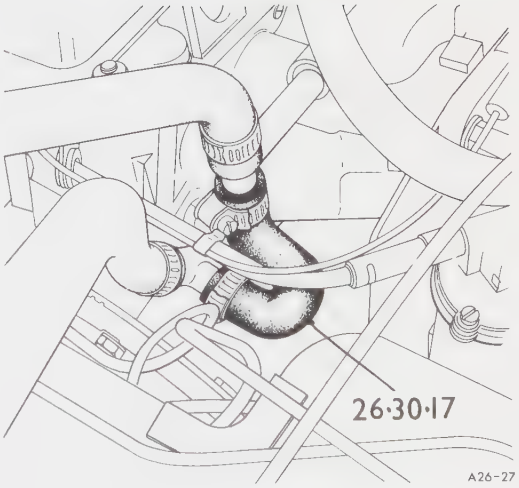

Removing

1. Drain the cooling system. 26.10.01.
2. Slacken the hose clips.
3. Remove the hose.

Refitting

4. Reverse instructions 1 to 3.

continued

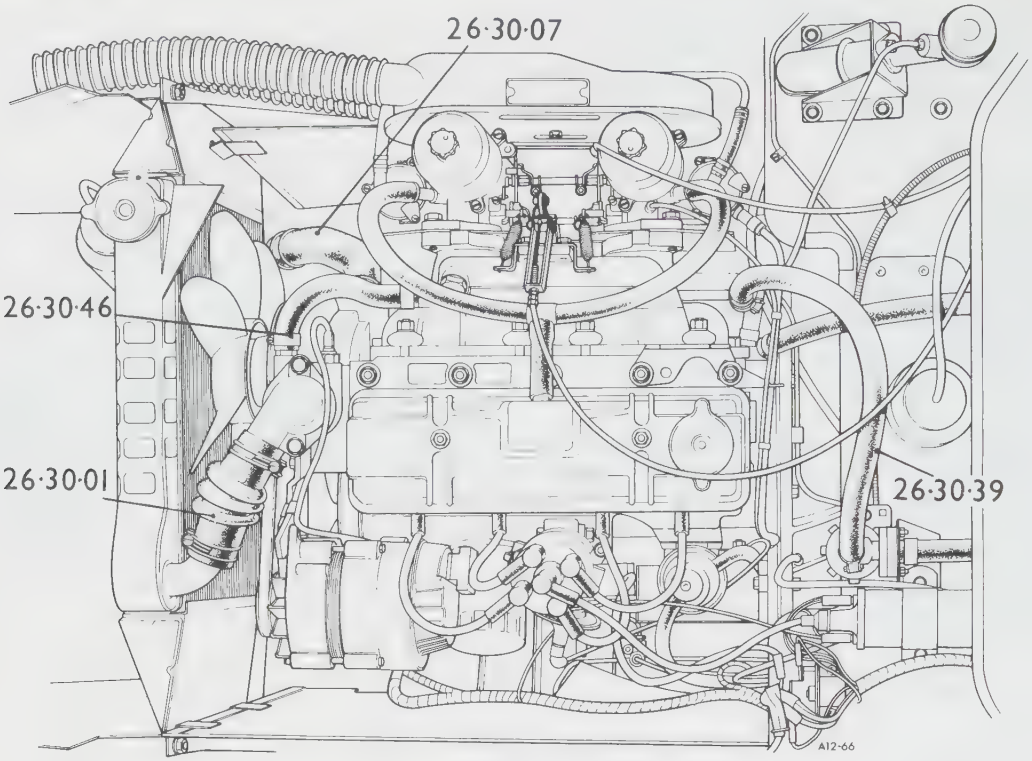

U.K. and European specification

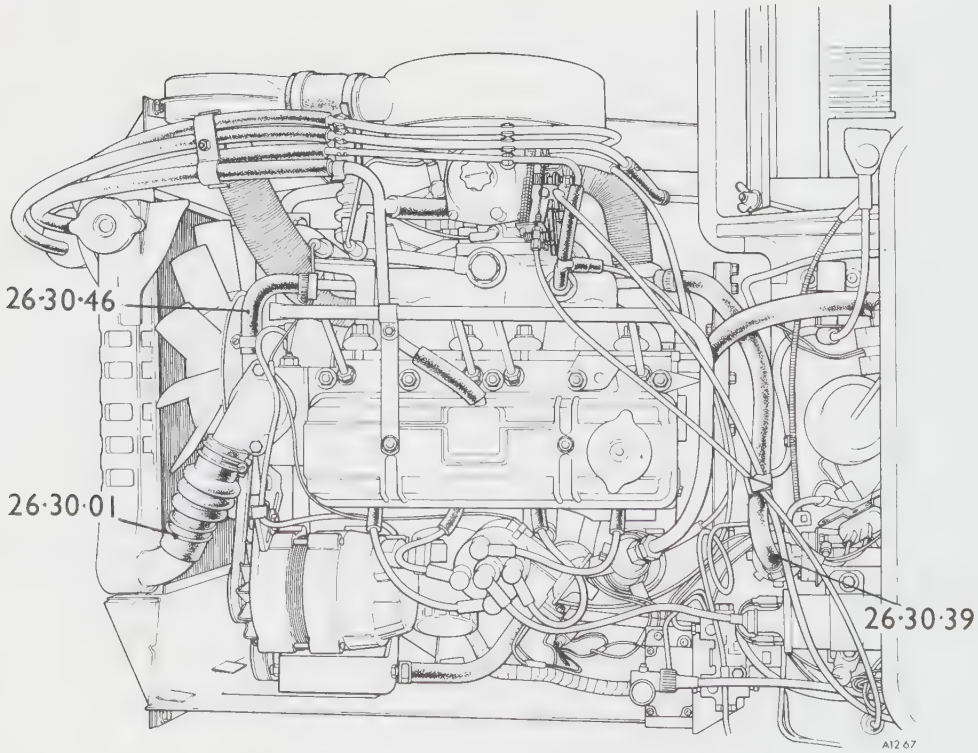

U.S.A. Non-Catalytic Converter Specification

RADIATOR

– Remove and refit 26.40.01

Removing

1. Disconnect the battery.
2. Drain the cooling system. 26.10.01.
3. Disconnect the top hose at the thermostat housing.
4. Disconnect the bottom hose at the water pump housing.
5. Disconnect the overflow pipe from the radiator.
6. Disconnect the emission and evaporative control hoses from the pipes. (USA Catalytic and non Catalytic Converter specification).
7. Remove the four nuts, bolts, plain and spring washers (two each side) securing the radiator to its mounting.
8. Withdraw the radiator block vertically, complete with the side brackets.
9. Remove the side brackets from the radiator block.

Refitting

10. Reverse instructions 1 to 9 ensuring that the cooling system is filled – 26.10.01. – before the battery is connected.

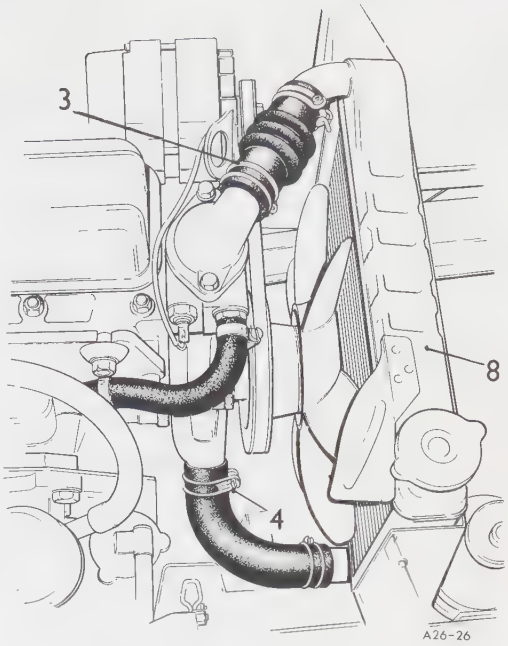

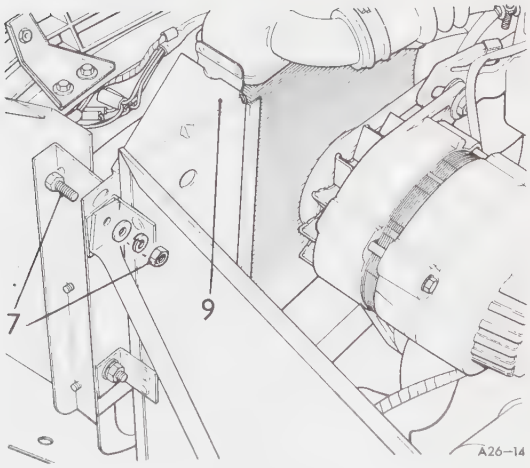

THERMOSTAT

– Remove and refit 26.45.01

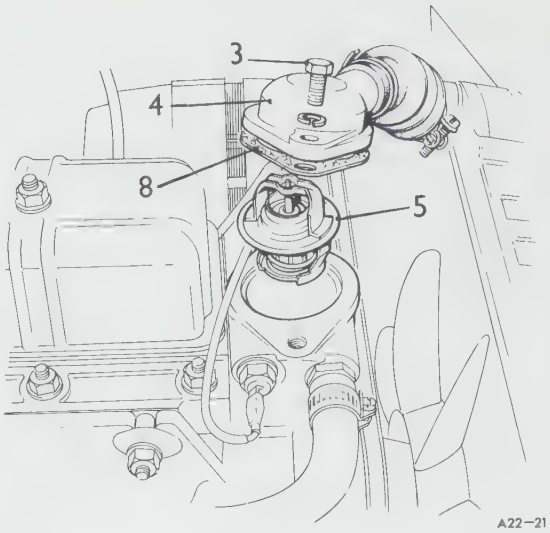

Removing

WARNING: This operation must only be carried out when the engine coolant is cold or tepid.

1. Partially drain the radiator 26.10.01. Allow sufficient coolant to drain, for re-use, into a suitable clear container.
2. Refit the bottom hose.
3. Remove the two bolts and spring washers securing the thermostat elbow to the water pump housing.
4. Lift-up the elbow.
5. Lift-out the thermostat.

Refitting

6. Clean the elbow and the water pump housing mating faces.
7. Insert the thermostat into its housing.
8. Using a new gasket, fit the elbow, tightening the retaining bolts and spring washers evenly to the correct torque – see Section 06.
9. Top-up the radiator and fit the cap.

THERMOSTAT

– Test 26.45.09

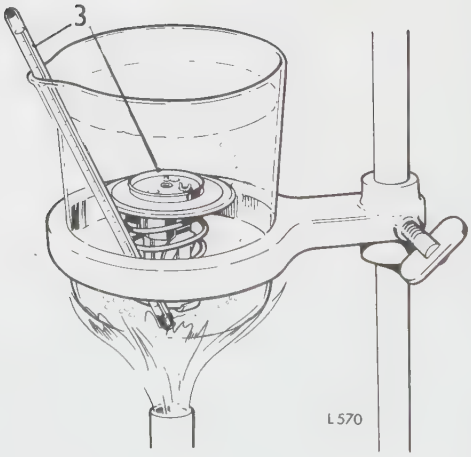

1. Remove the thermostat. 26.45.01.
2. Note the temperature stamped on the thermostat at which it should be fully open.
3. Place the thermostat and a centigrade thermometer in a laboratory beaker half full of water. Heat the water and observe the temperature at which the thermostat opens.
4. Refit or renew the thermostat as necessary. 26.45.01.

[**NOTE:** At room temperature, the thermostat must be fully closed. Otherwise the engine will not warm up sufficiently and the heater will deliver inadequate heat in cold weather. In replacing the thermostat, select the correct temperature range as specified in the General Specification Data for your particular model Spitfire.]

WATER PUMP

– Remove and refit **26.50.01**

Removing

1. Disconnect the battery.
2. Remove the water pump housing assembly complete with fan blades. 26.50.03.
3. Remove the fan blades instruction 4 or 5, according to specification. 26.25.06.
4. Remove the three nuts securing the water pump to the water pump housing.
5. Withdraw the water pump (complete with viscous coupling – Catalytic and non Catalytic Converter specification).
6. Remove the viscous coupling. 26.25.19.

Refitting

7. Fit the viscous coupling. 26.25.19 (USA Catalytic and non Catalytic Converter specification).
8. Clean the water pump and housing mating faces and using a new gasket, fit the water pump, securing it with the three nuts and spring washers.
9. Fit the fan blades, reversing instruction 4.
10. Clean the water pump housing and cylinder head mating faces and using a new gasket fit the water pump housing. 26.50.03.
11. Fill the cooling system before connecting the battery.

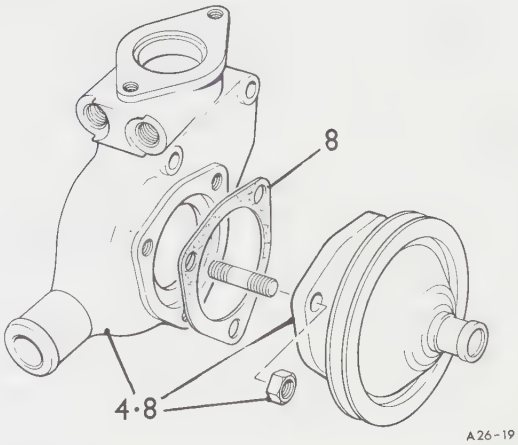

WATER PUMP HOUSING ASSEMBLY

– Remove and refit **26.50.03**

Removing

1. Disconnect the battery.
2. Drain the cooling system.
3. Disconnect the top hose at the thermostat housing.
4. Disconnect the bottom hose at the water pump housing.
5. Disconnect the water temperature transmitter wire.
6. Disconnect the hose from the water pump housing to the inlet manifold.

continued

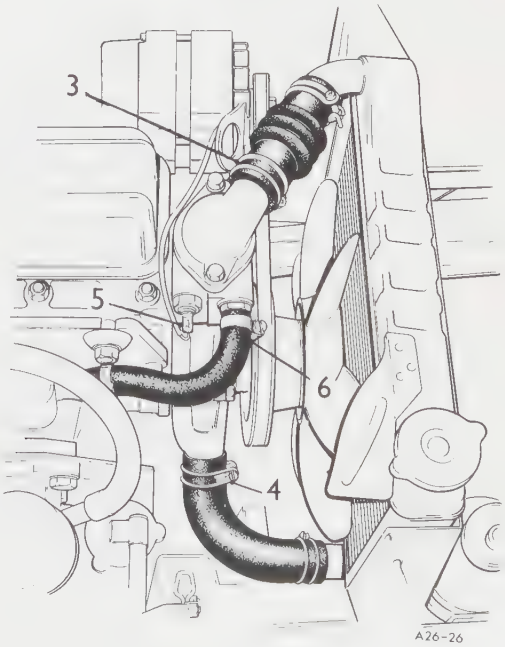

7. Disconnect the vacuum pipe from the front vapour trap to the distributor. (USA Catalytic and non Catalytic Converter specification).
8. Disconnect the pipe at the union with the water pump housing.
9. Remove the three bolts retaining the water pump housing to the cylinder head.
10. Withdraw the water pump housing complete with water pump, thermostat housing and fan.

Refitting

11. Clean the water pump housing and cylinder block mating faces.
12. Using a new gasket fit the water pump housing assembly to the cylinder head and evenly tighten the three retaining bolts.
13. Reverse instructions 1 to 8.

Note. Illustration A. U.K. and European specification. Illustration B. U.S.A. Catalytic and Non-Catalytic Converter specification.

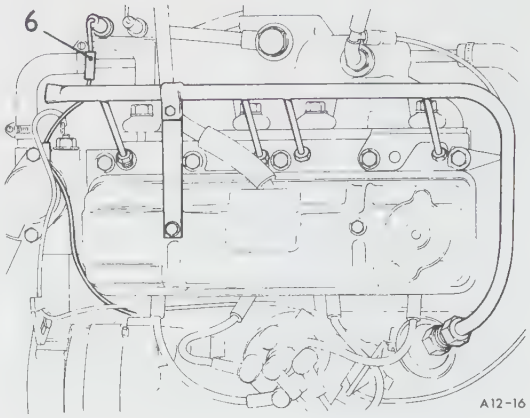

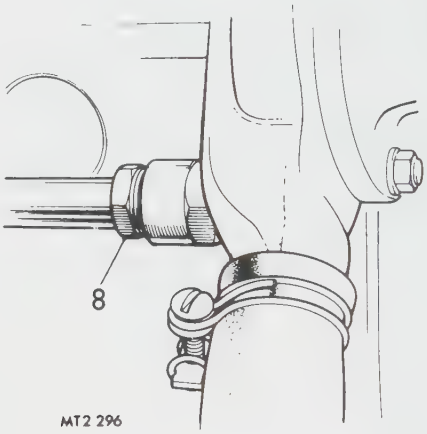

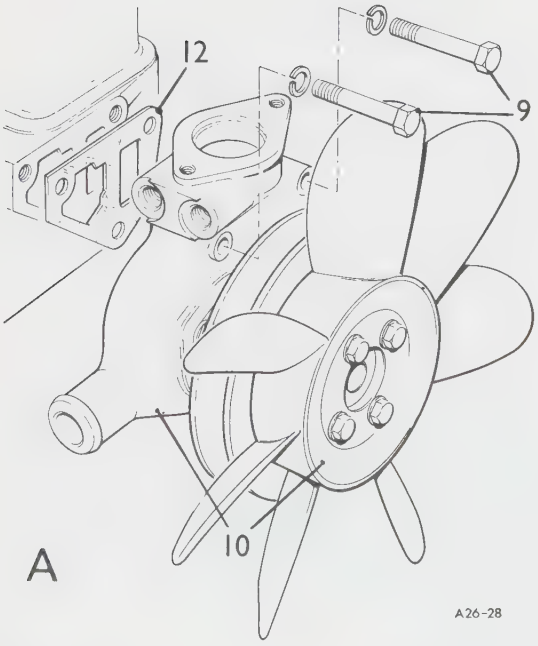

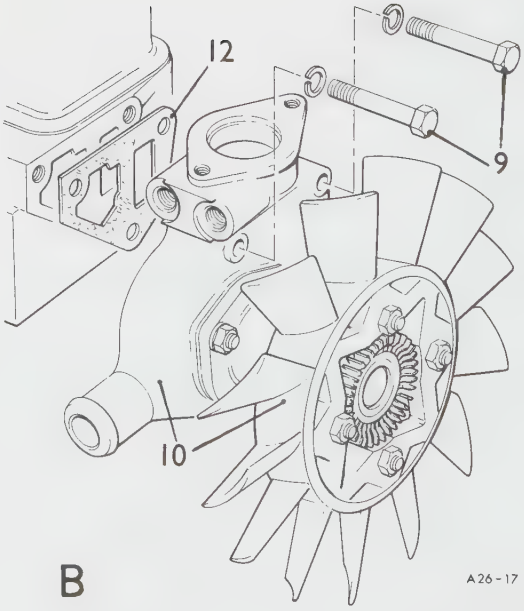

MANIFOLD AND EXHAUST SYSTEM OPERATIONS

Down pipe flange packing – remove and refit 30.10.26

Exhaust manifold – remove and refit 30.15.10

Exhaust system – alignment – check and adjust 30.10.30
– complete – remove and refit 30.10.01
description 30.00.00

Front pipe – remove and refit 30.10.09

Induction manifold – remove and refit 30.15.02

Intermediate pipe – remove and refit 30.10.11

Manifold gasket – remove and refit 30.15.15

Mounting straps – remove and refit 30.20.07

Tail pipe and silencer remove and refit 30.10.22

EXHAUST SYSTEM

– Description **30.00.00**

U.S.A. Market vehicles **not** fitted with a catalyst exhaust emission control system have a two part exhaust system comprising of a front pipe running the length of the car to the rear silencer assembly connection. Other vehicles have a three part exhaust system comprising front pipe, intermediate pipe and a combined silencer and tail pipe assembly. For details of exhaust emission control equipment refer to Section 17.

EXHAUST SYSTEM COMPLETE

– Remove and refit **30.10.01**

Removing

1. Remove the silencer assembly. 30.10.22.
2. Remove one bolt, nut and washer to release the front mounting from the gearbox.
3. Remove nuts and washers securing the front pipe to the exhaust manifold.
4. *U.S.A. Market vehicles.* Disconnect emmission control pipe from the front pipe.
5. Pull front pipe clear of the manifold and remove the down pipe flange packing.
6. Support the exhaust system and remove one bolt, nut and washer to release exhaust system from the centre mounting.
7. Remove the exhaust system from the car.
8. *Three part system.* Release the clamp, or three bolts, nuts and washers on catalyst cars, and separate the front pipe from the intermediate pipe.

Refitting

9. *Three part system.* Assemble the front pipe to the intermediate pipe, fit the clip, or three bolts, nuts and washers, but do not tighten.
10. Fit the front pipe, using a new down pipe flange packing, to the exhaust manifold.
11. *U.S.A. Market vehicles.* Reconnect the emmission control pipe to the front pipe.
12. Connect the exhaust system front mounting bolt, but do not tighten.
13. Connect the exhaust system centre mounting bolt, but do not tighten.
14. Fit the silencer assembly. 30.10.22.
15. Check exhaust system alignment 30.10.30 before tightening all clamps and mounting bolts.
16. Start engine and check for exhaust gas leaks.

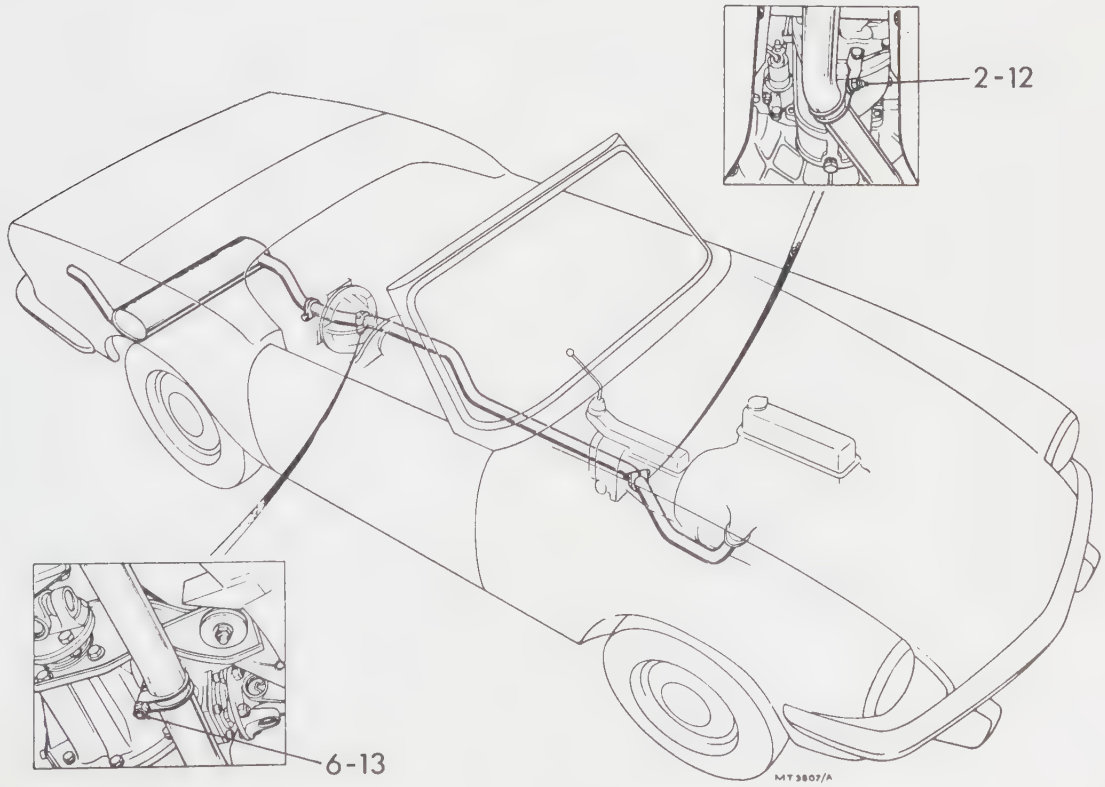

FRONT PIPE

– Remove and refit **30.10.09**

Removing

1. *Two part system.* Remove one bolt, nut and washer to release exhaust system centre mounting.
2. Release front pipe from silencer (two part system) or intermediate pipe (three part system).
3. Remove one bolt, nut and washer to release front mounting from the gearbox.
4. Remove nuts and washers securing front pipe to the exhaust manifold.
5. *U.S.A. Market vehicles.* Disconnect emission control pipe from the front pipe.
6. Pull front pipe clear of the manifold and remove the down pipe flange packing.
7. Withdraw the front pipe from the silencer (two part system) or the intermediate pipe (three part system).

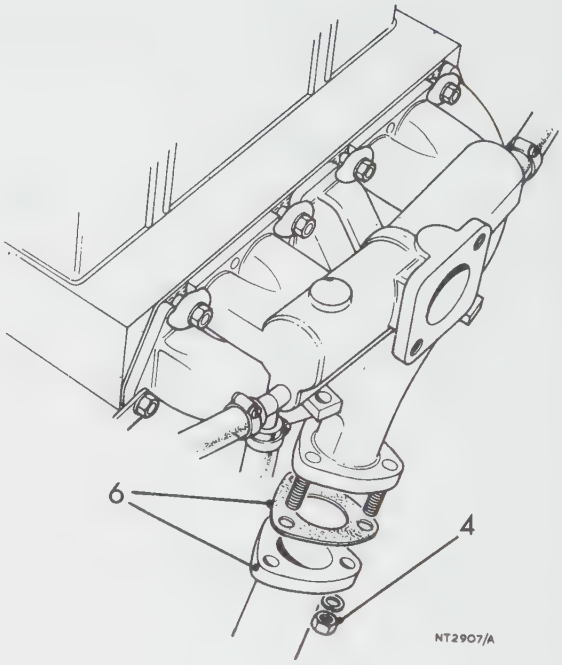

Refitting

8. Reverse operations 1 to 7, noting:
   a. Fit a new down pipe flange packing.
   b. Check exhaust system alignment 30.10.30 before tightening clamp and mounting bolts.
9. Start engine and check for exhaust gas leaks.

INTERMEDIATE PIPE

– Remove and refit **30.10.11**

Not applicable to U.S.A. Market cars not fitted with a catalyst exhaust emission control system.

Removing

1. Remove the silencer assembly. 30.10.22.
2. Release front pipe from intermediate pipe.
3. Remove one bolt, nut and washer to release front mounting from gearbox.
4. Remove one bolt, nut and washer, to release exhaust system from the centre mounting.
5. Withdraw intermediate pipe from the front pipe.

Refitting

6. Reverse operations 1 to 5 but do not tighten clamp or mounting bolts.
7. Check exhaust system alignment 30.10.30 before tightening clamps and mounting bolts.
8. Start engine and check for exhaust gas leaks.

TAIL PIPE AND SILENCER

– Remove and refit **30.10.22**

Removing

1. Release clip holding silencer assembly to the front pipe (two part system) or the intermediate pipe (three part system).
2. Remove two bolts, nuts, washers and clamp plates holding silencer to rear support straps, noting position of the clamp plates for correct reassembly.
3. Remove the silencer assembly from the car.

Refitting

4. Align and slide the silencer assembly over the front/intermediate pipe.
5. Refit the two bolts, nuts, washers and clamp plates.
6. Tighten the joint clip.
7. Start engine and check for exhaust gas leaks.

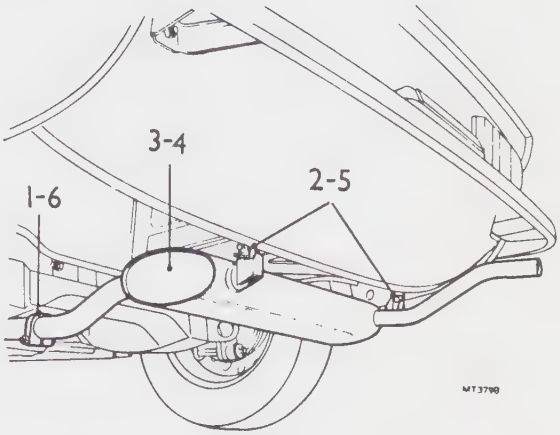

DOWN PIPE FLANGE PACKING

– Remove and refit **30.10.26**

Removing

1. Remove nuts and washers holding the front pipe to the exhaust manifold.
2. Remove one bolt, nut and washer to release front mounting from the gearbox.
3. *U.S.A. Market vehicles.* Disconnect emission control pipe from front pipe.
4. Pull down front pipe and remove flange packing.

Refitting

5. Reverse operations 1 to 4.
6. Start engine and check for exhaust gas leaks.

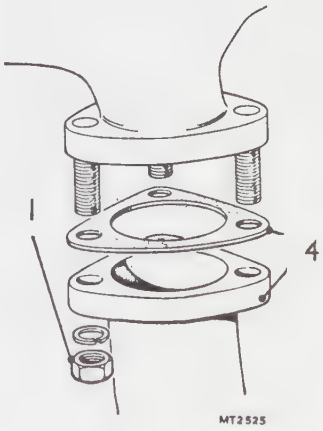

EXHAUST SYSTEM ALIGNMENT

– Check and adjust **30.10.30**

NOTE: This operation is only necessary if there is audible indication that:

a. the exhaust system is fouling the body and/or

b. the exhaust system components are so positioned one to another that the mountings are strained and give rise to body vibration.

Check

1. Check all pipes and silencer for body clearance.

Adjust

Where it is necessary to re-align the exhaust system:

2. Slacken all clamp and mounting bolts, re-align the system as necessary and tighten the bolts.
3. Start engine and check for exhaust gas leaks.

MANIFOLDS

INDUCTION MANIFOLD – Remove and refit **30.15.02**
*** Operations 1 to 31 inclusive**

EXHAUST MANIFOLD – Remove and refit **30.15.10**
*** Operations 1 to 15 only and 17 to 31 excluding No.18**

MANIFOLD GASKET – Remove and refit **30.15.15**
*** Operations 1 to 6, 8, 10 to 12 and 17, 21 to 26, 29 to 31**

** Not applicable to U.S.A. Market cars fitted with catalyst exhaust emission control system. For these vehicles refer to the separate heading below.*

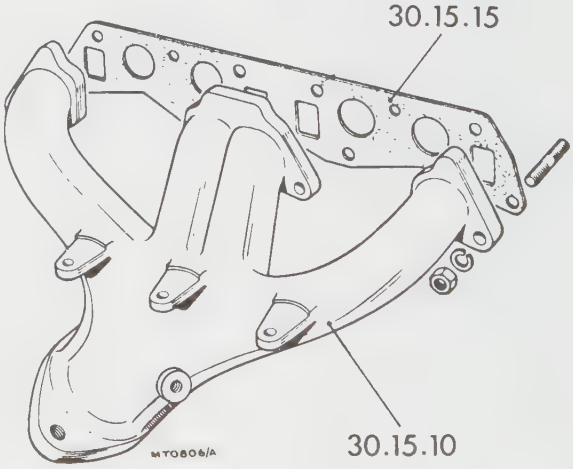

Removing

1. Disconnect the battery.
2. Partially drain the cooling system. 26.10.01.
3. Remove the air cleaner. 19.10.01.
4. Disconnect water hoses from the induction manifold.
5. Disconnect fuel pipe, accelerator cable and choke cable from the carburetter(s).
6. *U.S.A. Market vehicles.* Disconnect emission control system piping from the induction manifold and unclip pipes from top of the carburetter.
7. Remove nuts and washers securing exhaust front pipe to the exhaust manifold.
8. Remove one bolt, nut and washer to release front exhaust system mounting from the gearbox.

continued

9. Pull the front pipe clear of the manifold and remove the down pipe flange packing.
10. Remove eight nuts and washers, and six clamps securing the induction and exhaust manifold assembly to the cylinder head.
11. Withdraw the induction and exhaust manifold assembly, complete with carburetter(s) from the cylinder head.
12. Remove and discard the manifold gasket.

With manifold assembly on a workbench

13. From underneath the assembly remove two bolts *or* one nut and washer securing the induction manifold to the exhaust manifold.
14. *U.S.A. Market vehicles.* Remove the E.G.R. valve and connections from the manifolds.
15. Separate the induction manifold from the exhaust manifold.
16. Remove carburetter(s) from the induction manifold – two nuts and washers.

Refitting

17. Clean gasket faces on manifolds, carburetter(s) and cylinder head.
18. Fit carburetter(s) to induction manifold, renewing gasket(s) if necessary.
19. Assemble induction manifold to exhaust manifold, fit washer and nut *or* two bolts, but do not tighten.
20. *U.S.A. Market vehicles.* Fit E.G.R. valve and connections to manifolds.
21. Fit new manifold gasket and ensure that the locating dowels are correctly positioned.
22. Locate the induction and exhaust manifolds onto the cylinder head studs and dowels.
23. Fit, but do not tighten, the two nuts and washers securing the ends of the exhaust manifold to the cylinder head.
    NOTE: The water pipe bracket is secured by the rear nut.
24. Fit, but do not tighten, the two clamps, washers and nuts securing the bottom of the manifold flanges to the cylinder head.
    NOTE: On some models two longer clamps are used in this position.
25. Fit, but do not tighten, the four clamps, washers and nuts securing the top of the manifold flanges to the cylinder head.
    NOTE: On U.S.A. Market cars the flame trap bracket is secured by the front nut.

continued

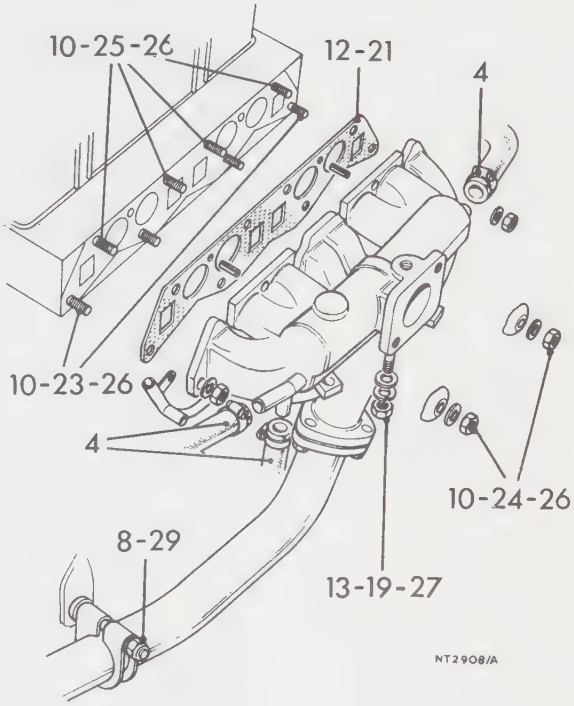

26. With clamps correctly located, evenly tighten the eight manifold nuts.
27. Tighten the two bolts *or* one nut securing the induction manifold to the exhaust manifold.
28. Fit exhaust front pipe to the exhaust manifold using a new down pipe flange packing.
29. Fit the bolt, nut and washer securing the exhaust system to the gearbox.
30. Reverse operations 1 to 6.
31. Start engine and check for exhaust gas and water leaks.

U.S.A. MARKET VEHICLES FITTED WITH A CATALYST EXHAUST EMISSION CONTROL SYSTEM

Removing

1. Remove cylinder head from the engine. 12.29.10.
2. Remove manifold assembly from the cylinder head and dismantle manifolds following operations 10 to 16 above.

Refitting

3. Re-assemble manifolds and fit the manifold assembly to the cylinder head following operations 17 to 27 above.
4. Fit cylinder head to the engine. 12.29.10.
5. Start engine and check for exhaust gas and water leaks.

MOUNTING STRAPS

– Remove and refit **30.20.07**

The exhaust system mounting straps are secured at either end by a bolt fixing.

CLUTCH OPERATIONS

Clutch assembly – remove and refit 33.10.01

Hydraulic system – bleed 33.15.01

Fluid pipe – remove and refit 33.15.09

Master cylinder – remove and refit 33.20.01

Master cylinder – overhaul 33.20.07

Release bearing assembly – remove and refit 33.25.12

Bearing assembly – overhaul 33.25.17

Clutch pedal – remove and refit 33.30.02

Clutch pedal – overhaul 33.30.06

Clutch pedal return spring – remove and refit 33.30.03

Slave cylinder – remove and refit 33.35.01

Slave cylinder – overhaul 33.35.07

CLUTCH ASSEMBLY

– Remove and refit 33.10.01

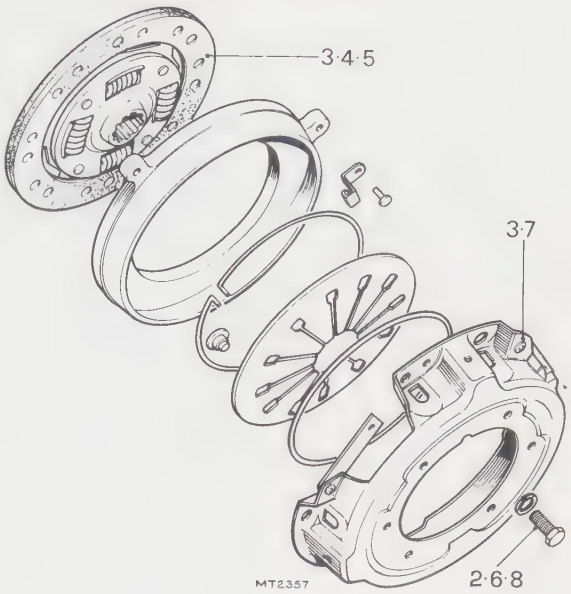

Removing

1. Remove the gearbox.37.20.01.
2. Working from inside the car, remove six Allen screws – holding the clutch to the flywheel using a $\frac{3}{16}$ in A.F. Allen key.
3. Remove the clutch driven plate and the pressure plate.

Refitting

4. With the longer boss of the splined hub towards the gearbox, offer up the driven plate to the flywheel.
5. Centralise the driven plate with the bush at the rear of the crankshaft.
6. Insert the six Allen screws holding the clutch to the flywheel.
7. Ensure that the pressure plate locates correctly on the dowels on the flywheel.
8. Tighten the six Allen screws holding the pressure plate to the flywheel.
9. Refit the gearbox. 37.20.01.

HYDRAULIC SYSTEM

– Bleed 33.15.01

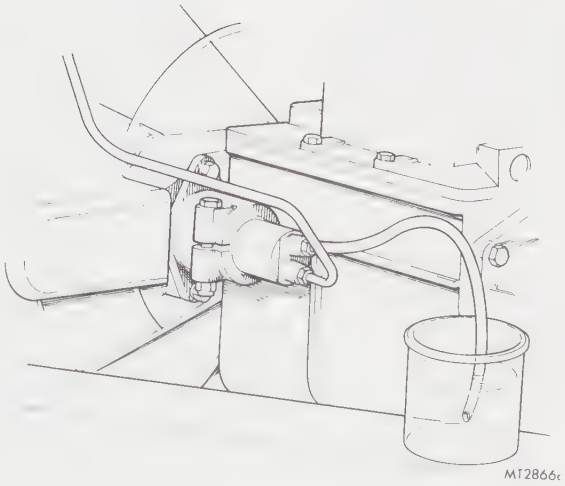

1. Ensure that the reservoir is topped up to ¼ in from the top.
2. Remove the gearbox cover. 76.25.07.
3. Wipe the bleed nipple clean.
4. Attach a piece of small bore tubing to the nipple and let it hang in a container partially filled with hydraulic fluid.
5. Unscrew the bleed nipple one complete turn.

NOTE: During bleeding, care should be taken to ensure that the reservoir does not become empty, resulting in air being drawn into the system. Ensure that the fluid used is clean or air free.

6. Depress the clutch pedal fully and let it return without assistance.
7. Repeat this operation with a slight pause between each depression of the pedal.
8. Observe the fluid being discharged from the pipe.
9. When it is air free, hold the pedal in the depressed position.
10. Securely tighten the bleed screw.
11. Remove the pipe from the slave cylinder.
12. Refit the gearbox cover. 76.25.07.

FLUID PIPE

– Remove and refit **33.15.09**

Removing

1. Drain the hydraulic system.
2. Unscrew the pipe from the slave cylinder.
3. Unscrew the pipe from the master cylinder.
4. Remove the pipe from the car.

Refitting

5. Align the new pipe in the approximate position in the car.
6. Screw the pipe into the master cylinder.
7. Screw the pipe into the slave cylinder.
8. Top up the master cylinder with new fluid.
9. Bleed the hydraulic system. 33.15.01.

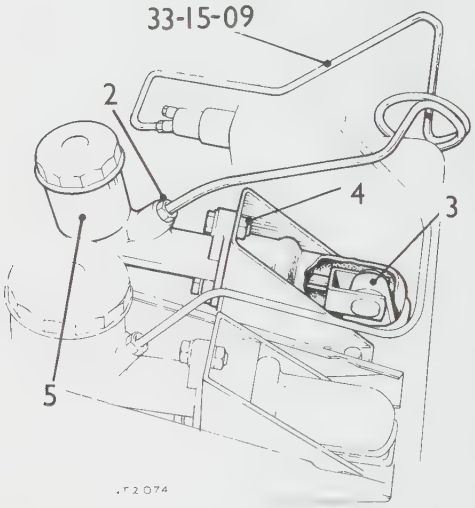

MASTER CYLINDER

– Remove and refit **33.20.01**

Removing

1. Drain the fluid system.
2. Disconnect the fluid pipe at the master cylinder, plug the open ends.
3. Lift the rubber boot, remove the split pin and the cotter pin from the top of the pedal.
4. Remove the two bolts securing the master cylinder to the bracket.
5. Remove the master cylinder from the car.

Refitting

6. Hold the master cylinder in place in the engine compartment.
7. Renew two bolts securing the master cylinder to the bracket and fit.
8. Refit the cotter pin, renew the split pin, refit the boot.
9. Connect the fluid pipe to the master cylinder.
10. Bleed the system. 33.15.01.

MASTER CYLINDER

– Overhaul 33.20.07

[CAUTION: Wash hydraulic cylinder components in brake fluid only. Never use gasoline or other petroleum-based solvents since they are damaging to rubber parts in the system.]

1. Drain the fluid reservoir.
2. Remove the master cylinder from the car. 33.20.01.
3. Slide the rubber along the push rod.
4. Remove the circlip from the end of the master cylinder and withdraw the push rod and washer.
5. Withdraw the piston spring and seal assembly from the master cylinder. Withdrawal may be facilitated by applying a compressed air line to the fluid outlet union.
6. Straighten the prong of the spring thimble and remove the thimble and spring from the piston.
7. Release the valve stem from the key hole slot in the thimble.
8. Slide the valve seal spacer along the valve stem.
9. Remove the valve seal from the valve stem and fit a new seal.
10. Assemble the spacer, spring and thimble to the valve stem.
11. Remove the seal from the piston and fit a new seal (seal lip towards the spring).
12. Engage the spring thimble on the piston and carefully depress the thimble prong.
13. Lubricate the bore of the master cylinder with clean brake fluid and insert the seal assembly spring and piston.
14. Fit a new rubber to the push rod.
15. Fit the push rod and washer to the master cylinder and secure with the clip.
16. Slide the rubber into position on the master cylinder.
17. Refit the master cylinder to the car. 33.20.01.
18. Bleed the cylinder.

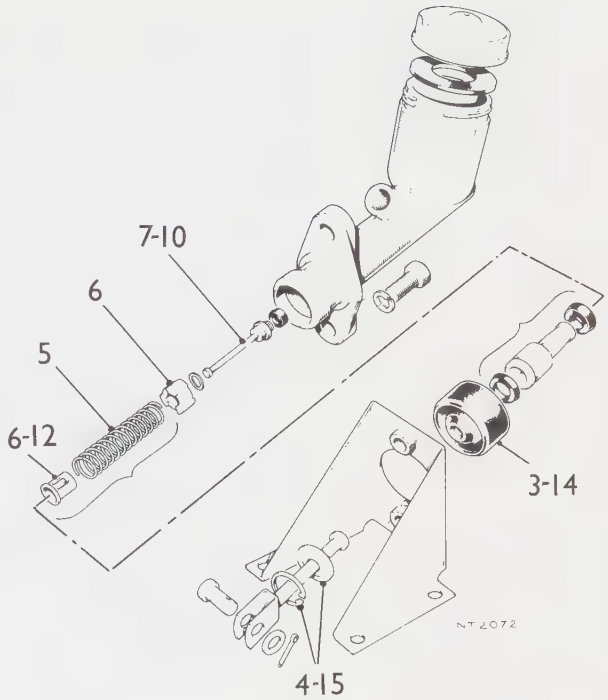

RELEASE BEARING ASSEMBLY

– Remove and refit 33.25.12

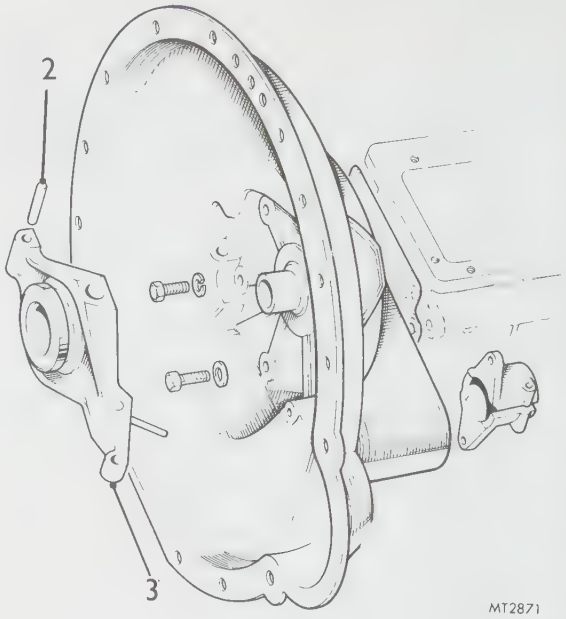

Removing

1. Remove the gearbox. 37.20.01.
2. Drive the pin from the clutch housing.
3. Remove the operating lever from the housing.
4. Press out the mills pin and release the bearing sleeve by extracting the plugs.
5. Withdraw the bearing from the sleeve.

Refitting

6. Reverse procedure 1 to 5.

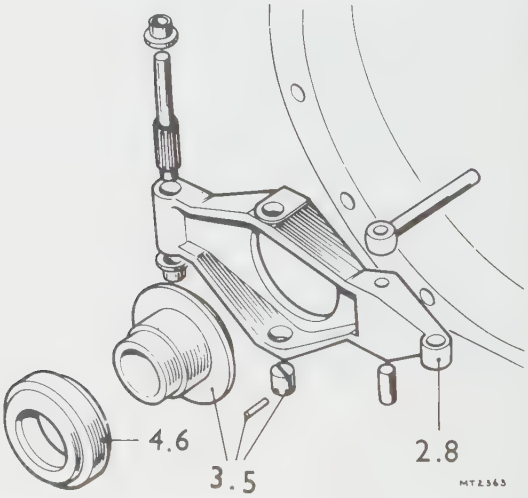

BEARING ASSEMBLY

– Overhaul 33.25.17

1. Remove the gearbox. 37.20.01.
2. Remove the operating lever assembly.
3. Remove the bearing sleeve.
4. Remove the bearing.
5. Renew the bearing sleeve.
6. Renew the bearing.
7. Grease the bearing and the sleeve.
8. Replace and refit the operating lever.
9. Refit the gearbox. 37.20.01.

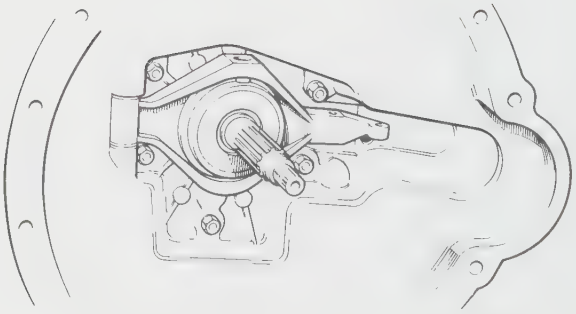

CLUTCH PEDAL

– Remove and refit 33.30.02

Removing

1. Remove the split pin, washer and clevis pin.
2. Remove the return spring.
3. Remove the eight bolts holding the clutch pedal bracket to the body.
4. Remove the bracket and the pedal from the car.
5. Remove one circlip from the pivot pin.
6. Push the pivot pin clear of the pedal.
7. Push the bush out of the pedal.
8. Remove the pedal from the bracket.

Refitting

9. Reposition the pedal in the bracket.
10. Push the bush through the pedal.
11. Push the lubricated pivot pin through the bush.
12. Replace the circlip and ensure it locates properly in the groove.
13. Reposition the bracket in the car.
14. Refit the eight screws in position and tighten.
15. Refit the clevis pin and the washer.
16. Renew the split pin and fit.
17. Refit the return spring.

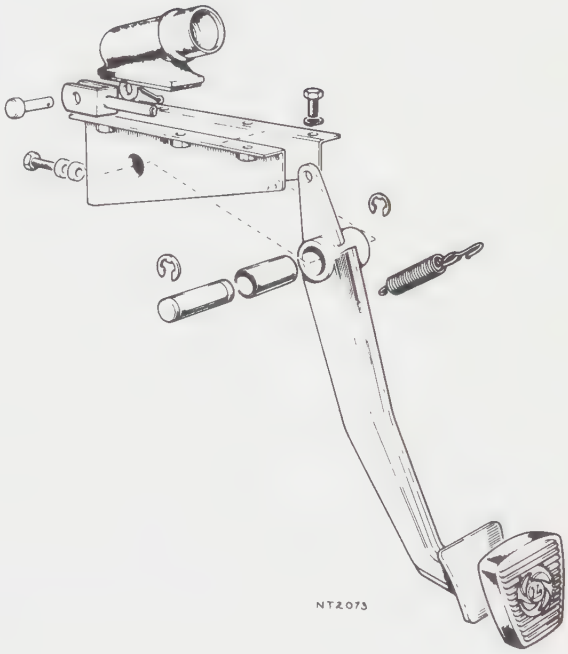

CLUTCH PEDAL RETURN SPRING

– Remove and refit 33.30.03

Removing

1. Lever the spring from the hole in the pedal.
2. Remove the spring from the bracket.

Refitting

3. Fit the new return spring to the bracket.
4. Spread the spring and position it through the hole in the pedal.

CLUTCH PEDAL

– Overhaul 33.30.09

1. Remove the clutch pedal. 33.30.02.
2. Remove the bush from the pedal.
3. Remove the pedal rubbers.
4. Fit the new bushes and lubricate.
5. Renew the pedal rubber and fit.
6. Refit the clutch pedal. 33.30.02.

SLAVE CYLINDER

– Remove and refit **33.35.01**

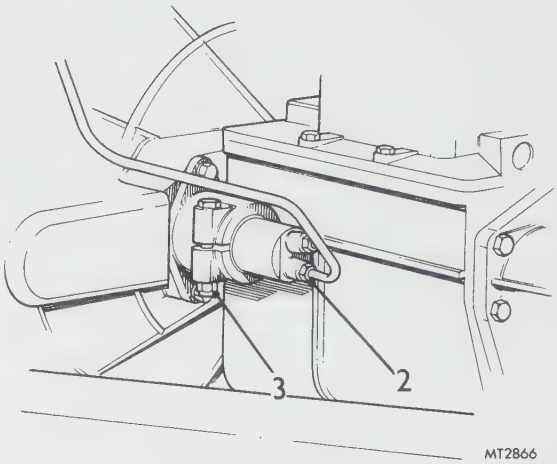

Removing

1. Drain the clutch system.
2. Disconnect the hydraulic pipe and push clear of the slave cylinder.
3. Remove the locating bolt, nut and washer.
4. Pull the slave cylinder clear of the housing.

Refitting

5. Centralise the push rod in the housing.
6. Push the slave cylinder into the housing.
7. Line up the groove with the hole and place the bolt in through the hole and tighten the nut.
8. Line up the hydraulic pipe and tighten the nut up in the slave cylinder.
9. Bleed the system. 35.15.01.

SLAVE CYLINDER

– Overhaul **33.35.07**

[CAUTION: Wash hydraulic cylinder components in brake fluid only. Never use gasoline or other petroleum-based solvents since they are damaging to rubber parts in the system.]

1. Remove the slave cylinder from the car. 33.35.01.
2. Remove the dust cover retainer.
3. Remove the dust cover.
4. Remove the circlip.
5. Remove the plunger.
6. Remove the seal.
7. Remove the spring.
8. Fit a new seal, spring circlip, dust cover and retainer and lubricate.
9. Refit the slave cylinder to the car. 33.35.01.

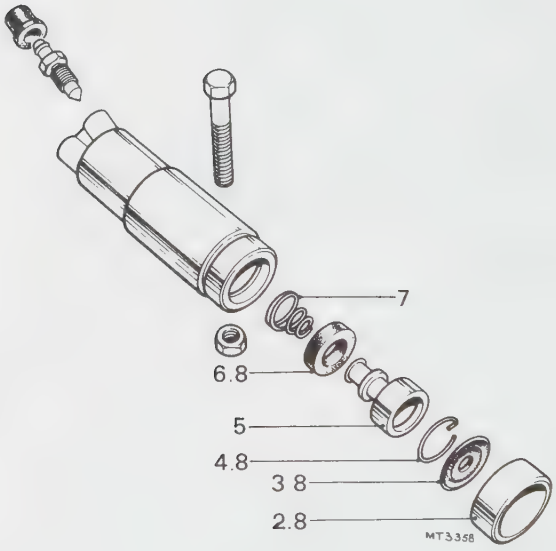

SINGLE RAIL GEARBOX OPERATIONS

Clutch/bell housing – remove and refit 37.12.07
Drive flange – remove and refit 37.10.01

First motion shaft
– bearing – remove and refit 37.20.17
– oil seal – remove and refit 37.23.04
– remove and refit 37.20.16

Gear change
– lever – remove and refit 37.16.04
– lever – draught excluder – remove and refit 37.16.05
– rod – oil seal – remove and refit 37.23.10
– selector mechanism and housing – remove and refit 37.16.37
– selectors – remove and refit 37.16.31

Gearbox assembly
– overhaul 37.20.04
– remove and refit 37.20.01

Layshaft
– bearing – remove and refit 37.20.22
– remove and refit 37.20.19

Main case – remove and refit 37.12.40
Mainshaft bearing – remove and refit 37.20.26
Rear extension – remove and refit 37.12.01
Rear oil seal – remove and refit 37.23.01

Speedometer
– drive gear – remove and refit 37.25.01
– drive pinion – remove and refit 37.25.05

Synchroniser assemblies – remove and refit 37.20.07

[CAUTION: Please read the instructions thoroughly before you attempt transmission repairs. If you lack the necessary skills or tools we suggest you leave this work to an Authorized Dealer or other qualified shop. Before taking a removed transmission in for repair, thoroughly clean its exterior but do not undertake any disassembly.]

DRIVE FLANGE

– Remove and refit **37.10.01**

Service tools: S337 or 18G 1205

Removing

1. Drive the vehicle onto a ramp.
2. Remove the gearbox cover. 76.25.01.
3. Remove the three screws securing the propellor shaft cover plate to the transmission tunnel.
4. Disconnect the propellor shaft from the gearbox drive flange.
5. Raise the ramp – drain the oil.
6. Disconnect the exhaust pipe from the support bracket on the gearbox.
7. On vehicles where fitted, disconnect the engine restraint cable from the bell housing.
8. Remove the nuts, bolts and washers securing the gearbox rear mounting to the chassis.
9. Position a ramp jack under the gearbox casing and raise to give sufficient clearance between the propellor shaft and the gearbox drive flange. Care must be taken not to foul the radiator with the fan.
10. Lower the ramp.
11. Using tool S337 or 18G 1205, to prevent rotation of the drive flange, remove the securing nut and washer.
12. Withdraw the drive flange.

Refitting

13. Reverse instructions 1 to 12.

On vehicles fitted with an engine restraint cable. Refit the cable to the bell housing.
Slacken the locknut from bracket on chassis and adjust to eliminate all slack but do not add tension.
Tighten locknut to secure.

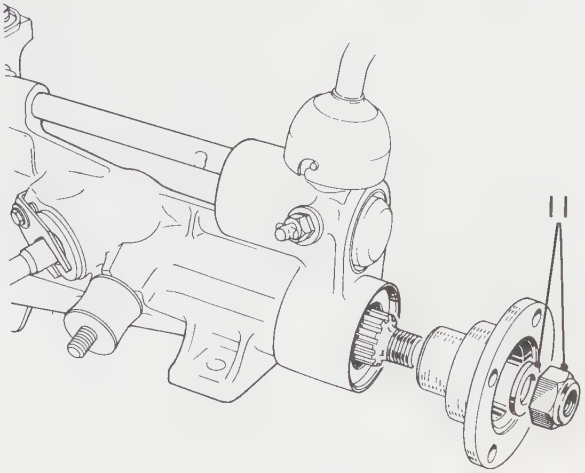

A37-031

REAR EXTENSION

– Remove and refit **37.12.01**

Service tools: S337 or 18G 1205

Removing

1. Raise the car, drain the gearbox and fit the filler plug in the drain plug hole.
2. Remove the gearbox from the car. 37.20.01.

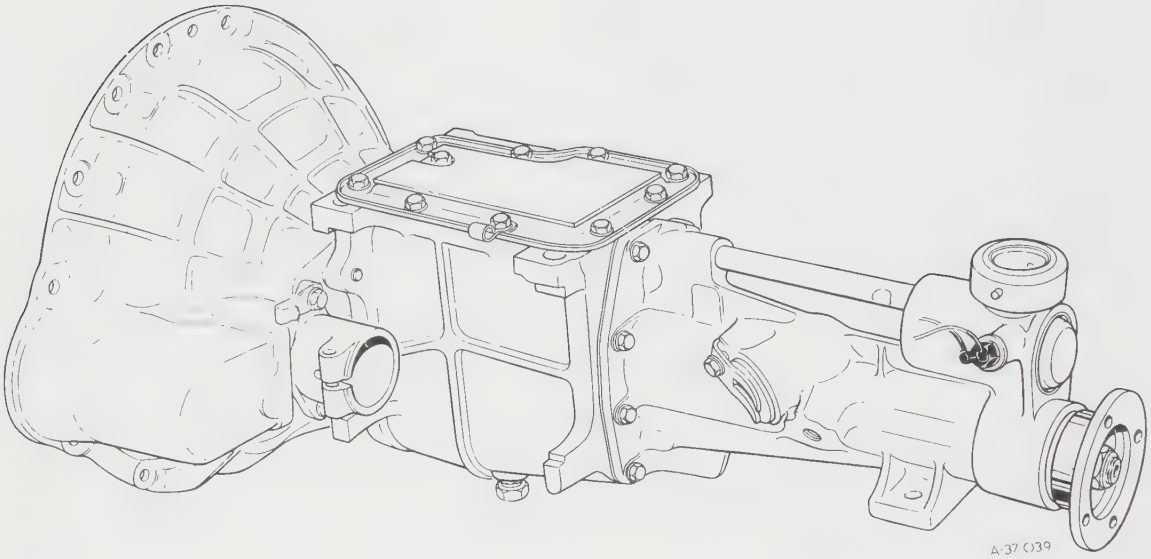

3. Support the gearbox in a vice by means of the filler plug and remove the reverse light switch.

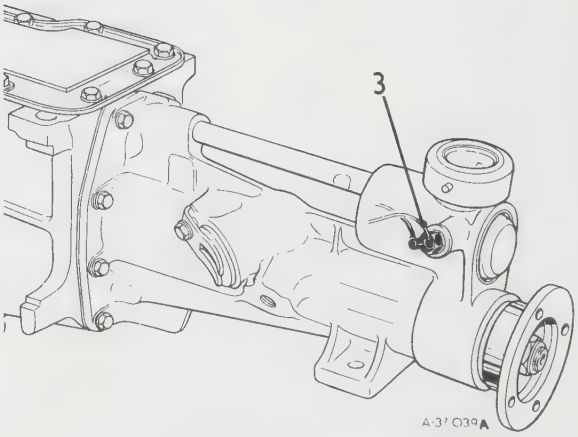

4. Remove the clutch housing and gasket. 37.12.07.
5. Carefully drift out the roll pin from the selector rod.
6. Remove the speedometer drive pinion. 37.25.05.
7. Using tool S337 to prevent rotation of the driving flange remove the securing nut and washer.
8. Withdraw the driving flange.

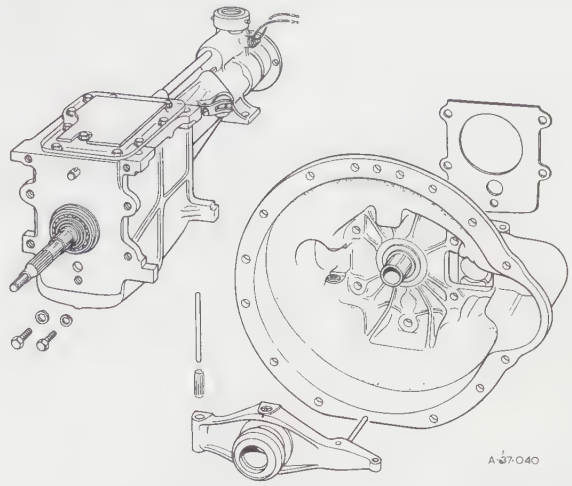

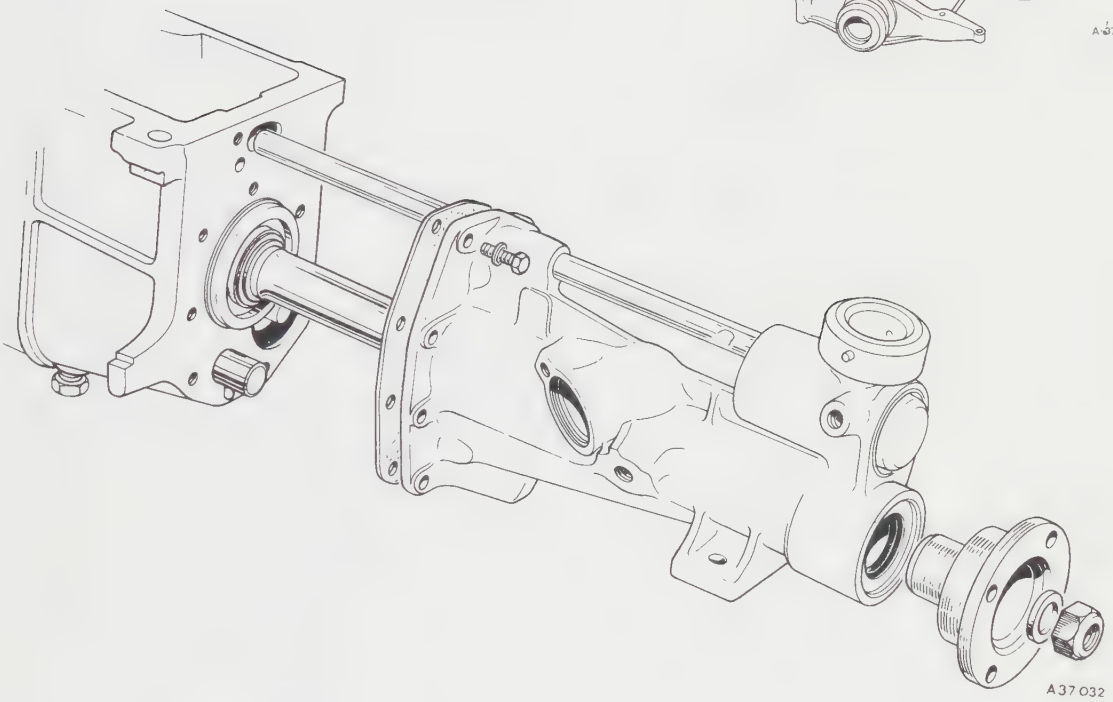

9. Remove the gearbox top cover, gasket and spool plate.
10. Locate the gear selector in the reverse gear position and ensure that the selector shaft pins clear the interlock spool and the gear selector forks.
11. Remove the bolts and spring washers securing the rear extension to the gearbox and remove the rear extension exhaust bracket.
12. Remove the rear extension from the gearbox. Ensure that the selector pins do not foul and that the layshaft is not displaced. Lift out the interlock spool as the rear extension and selector shaft are withdrawn.
13. Remove the gasket.
14. Remove the distance washer from the mainshaft.
15. Remove the oil seal and bearing from the rear extension case.

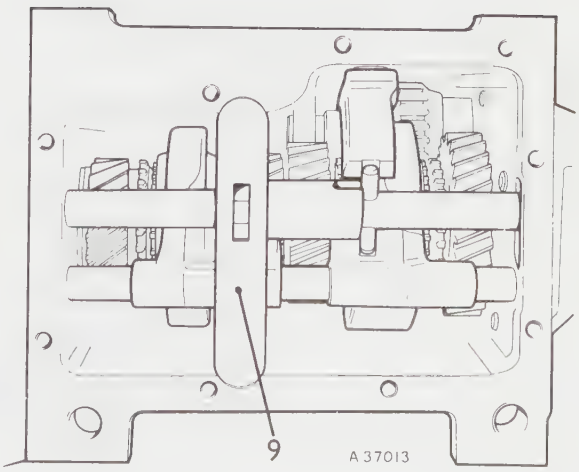

Sheet 2 37.12.01

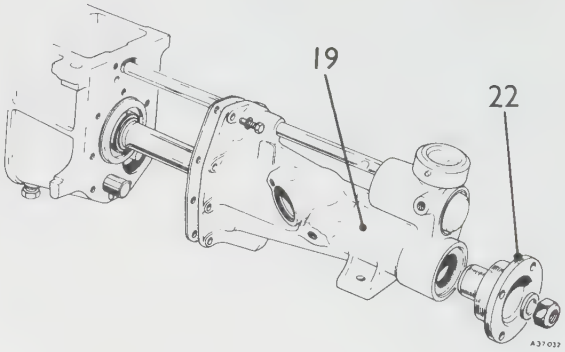

Refitting

16. Ensure that the mating faces of the gear case and rear extension housing are clean.
17. Locate a new gasket in position on the rear of the gear case.
18. Fit the distance washer to the mainshaft.
19. Offer up the rear extension to the gear case and guide the selector rail into position remembering to fit the selector spool.
20. Fit the rear extension securing bolts and washers and exhaust bracket and lock plate.
21. Fit the rear bearing and a new oil seal to the extension casing.
    The lip of the seal must be fitted towards the gearbox. When installed the seal should be flush with the casing.
22. Lubricate the seal lip and running surface of the drive flange. Fit the drive flange, washer and nut. Using Tool S337 to prevent flange rotation, torque the nut to 90-120 lbf ft (12.44-16.60 kgf m).
23. Fit the roll pin to the front end of the selector rail. This pin must be positioned centrally.
24. Fit the speedometer drive pinion. 37.25.05.
25. Fit the reverse light switch.
26. Fit the clutch housing, gasket, clutch release fork and bearing. 37.12.07.
27. Refill the gearbox with fresh lubricant. Ensure drain plug is tight.
28. Fit the interlock spool plate, gasket and top cover.
29. Fit the gearbox to the car. 37.20.01.

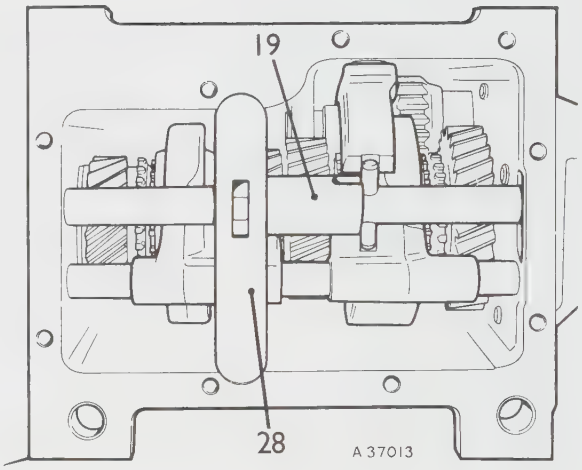

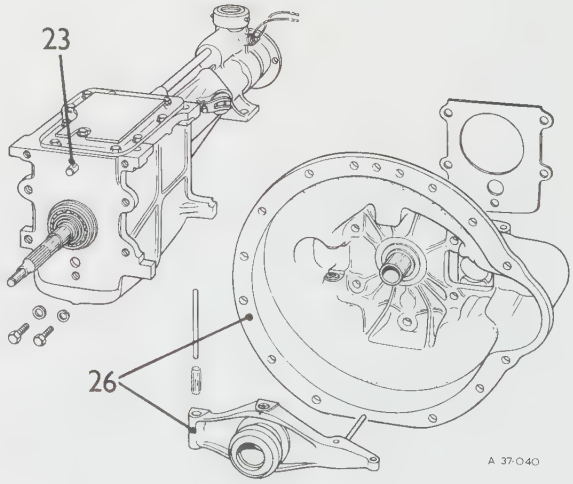

CLUTCH/BELL HOUSING

– Remove and refit **37.12.07**

Removing

1. Remove the gearbox from the car. 37.20.10.
2. Withdraw the clutch release lever and release bearing. 33.25.12.
3. Tape the splines of the first motion shaft to prevent damage to the oil seal when the clutch housing is withdrawn.
4. Remove the seven bolts and washers securing the clutch housing to the gearbox. Note that the lower bolt is fitted with a copper washer; the remaining bolts are fitted with spring washers.
5. Withdraw the clutch housing and gasket.

Refitting

6. Reverse instructions 2 to 5.
7. Remove the tape from the splines of the first motion shaft.
8. Fit the gearbox to the car. 37.20.01.

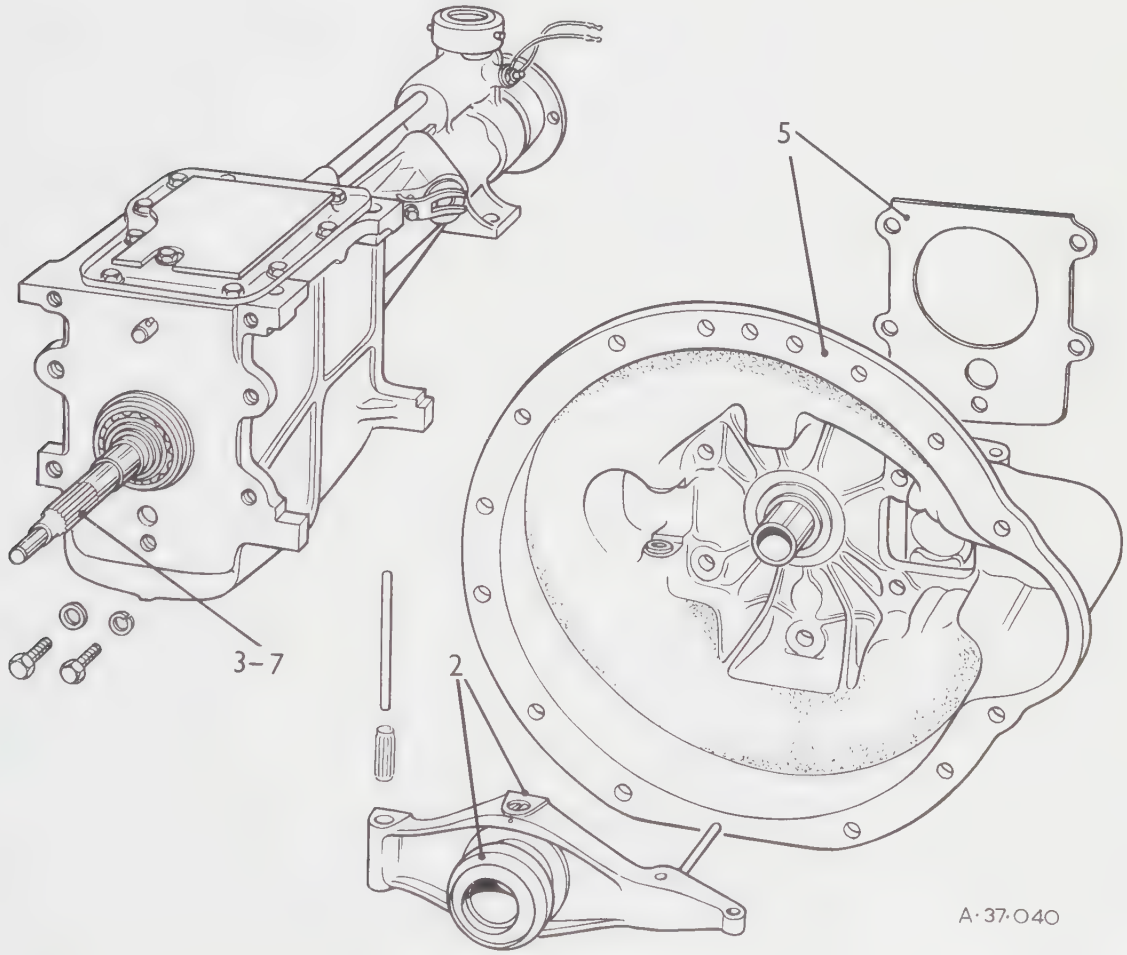

MAIN CASE

– Remove and refit 37.12.40

As operation 37.20.04 but excluding instructions 21 to 25, 27 to 35, and 38.

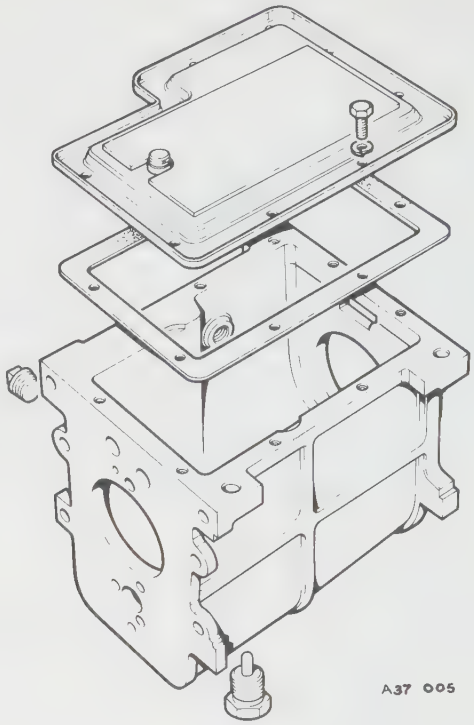

GEARCHANGE LEVER

– Remove and refit 37.16.04

Removing

1. Remove the gear lever draught excluder. 37.16.05.
2. Release the bayonet cap securing the gear lever to the gearbox extension and lift out the gear lever. Care must be taken not to lose the nylon plunger and anti-rattle spring from the gear lever ball swivel on gearboxes fitted with an O/D, feed wires carefully through the lever.

Refitting

3. Reverse instructions 1 and 2.

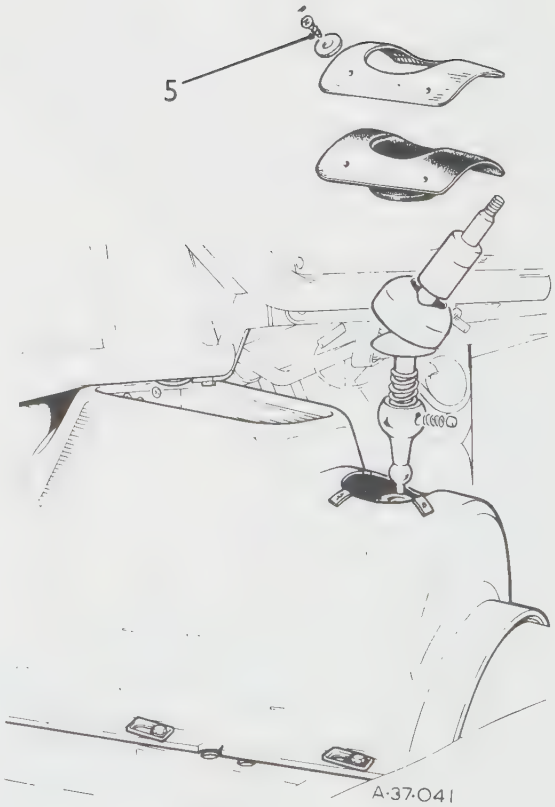

GEAR LEVER DRAUGHT EXCLUDER

– Remove and refit 37.16.05

Removing

1. Remove the gear lever knob.

1a. On vehicles fitted with an overdrive, prise off the gear lever knob cap/overdrive switch and disconnect the leads to the switch. Slacken the locknut, unscrew the retaining ring and remove the gear lever knob.

2. Remove the gearbox/transmission tunnel trim pads.
3. Remove the fascia support bracket. 76.46.09.
4. Remove the gearbox cover carpet. 76.49.01.
5. Remove four screws securing the draught excluder to the gearbox cover.
6. Remove the draught excluder.

Refitting

7. Reverse instructions 1 to 6.

37.12.40
37.16.05

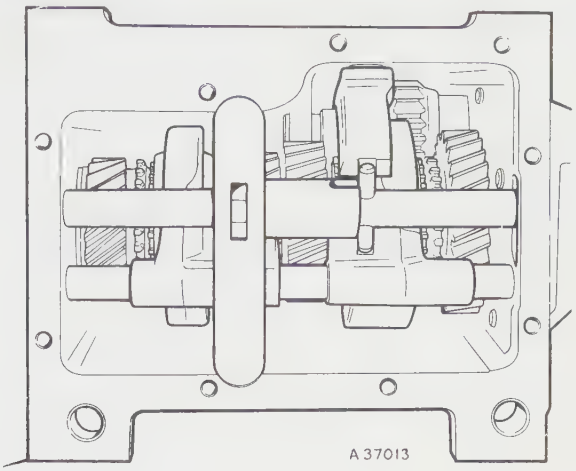

GEAR CHANGE SELECTORS

– Remove and refit **37.16.31**

Service tools: S337 or 18G 1205

Removing

1. Remove the gearbox rear extension. 37.12.01.
2. Withdraw the selector fork shaft.
3. Lift out the selectors.

Refitting

4. Fit the selectors to the gears.
5. Fit the selector shaft.
6. Fit the gearbox rear extension. 37.12.01.

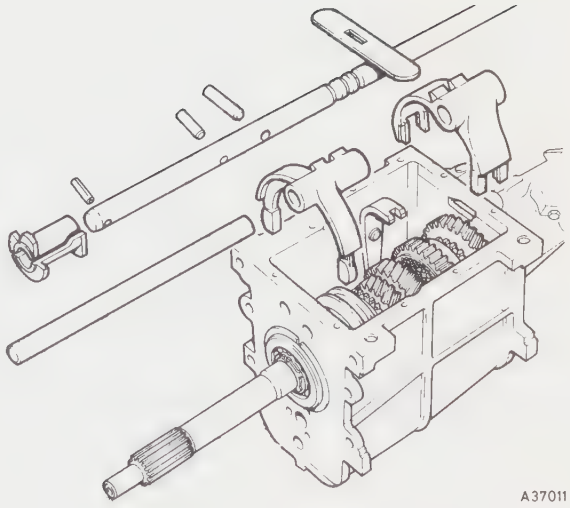

GEAR SELECTOR MECHANISM AND HOUSING

– Remove and refit **37.16.37**

Service tools: S337 or 18G 1205

Removing

1. Remove the gearbox rear extension. 37.12.01.
2. Slide the selector shaft rearward until it contacts the rear blanking plug.
3. Gently tap the selector shaft to remove the blanking plug.
4. Slide the selector shaft rearward until the selector shaft yoke is exposed.
5. Remove the roll pin securing the yoke to the shaft and withdraw the yoke.
6. Withdraw the selector shaft, moving it towards the front of the rear extension. Ensure that the roll pin hole at the rear of the selector shaft is maintained in an horizontal position to prevent the selector plunger trapping the shaft as it is withdrawn.
7. Remove the nylon plug, plunger, spring and 'O' ring from the rear extension casing.

Refitting

8. Reverse instructions 1 to 7.

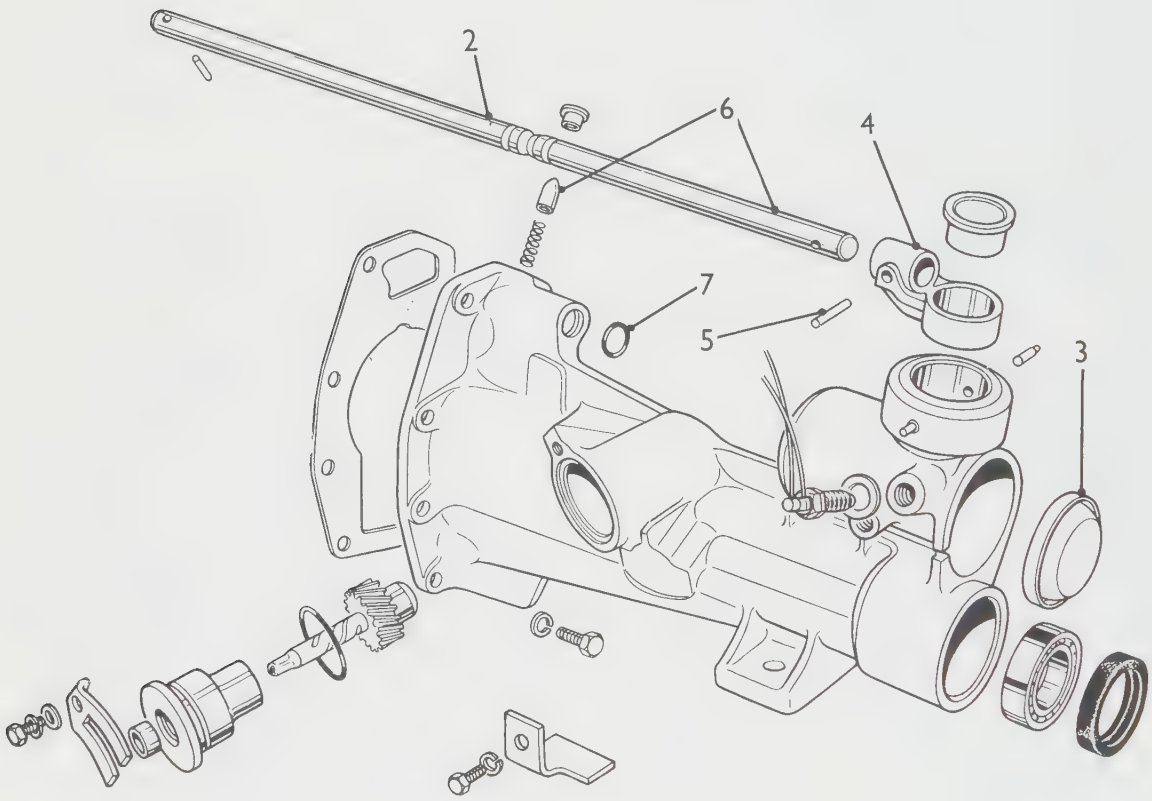

A·37·034

GEARBOX ASSEMBLY

– Remove and refit 37.20.01

Removing

1. Drive the vehicle onto the ramp and disconnect the battery.
2. Remove the gear lever knob. On vehicles fitted with an overdrive, prise off the gear knob cap/overdrive switch and disconnect the leads from the switch. Slacken the locknut, unscrew the retaining ring and remove the gear knob.
3. Remove the gearbox cover. 76.25.07
4. Remove the propeller shaft cover plate. This is secured to the transmission tunnel by three screws. Disconnect the propeller shaft from the gearbox drive flange.
5. Disconnect the speedometer cable drive from the gearbox.
6. Remove the pinchbolt and withdraw the clutch slave cylinder.
7. Raise the ramp and drain the gearbox.
8. Position a ramp jack under the engine sump and support the engine. To avoid damage to the sump a suitable piece of wood should be interposed between the jack pad and the sump.
9. Disconnect the exhaust pipe from the support bracket on the gearbox.
10. Remove the gearbox rear mounting nuts and washer.
11. Remove the engine restraining cable from the bell housing.
12. Remove all the bell housing bolts accessible from below.
13. Lower the ramp and open the bonnet.
14. Remove the starter motor attachment bolts.
15. Working inside the car, disconnect the electrical harness leads for the reversing lights, overdrive (if fitted) and seat belt warning system.
16. Detach the gearbox mounting assembly.
17. Remove the remaining bell housing, nuts, bolts and washers, noting the position of the engine earth lead.
18. Carefully withdraw the gearbox and remove it from the vehicle.

Refitting

19. Check that the clutch driven plate is centralised.
20. Position and fit the gearbox, ensuring that the constant pinion shaft is not allowed to hang on the clutch plate splines.
21. Fit the dowel bolt.
22. Fit and tighten the nuts and washers, (top of bell housing).
23. Fit and tighten the bell housing upper bolts, nuts and washers, ensuring that the engine earth lead is fitted.
24. Fit the gearbox mounting assembly and secure with the bolts and washers.
25. Fit the clutch slave cylinder, and secure with the pinchbolt, nut and plain washer(s).
26. Fit the speedometer cable drive to the gearbox.
27. Fit the propeller shaft to the gearbox drive flange.
28. Working under the bonnet, fit the starter motor.
29. Raise the ramp.
30. Tighten the dowel bolt.
31. Fit and tighten the engine restraint cable to the bell housing and adjust if necessary.
32. Fit and tighten the remaining bell housing bolts, nuts and washers.
33. Lower and remove the ramp jacks.
34. Refit the exhaust front pipe to the support bracket on the gearbox.
35. Lower the ramp.
36. Connect the electrical harness leads.
37. Fill the gearbox with the recommended oil.
38. Refit the gearbox cover. 76.25.07.
39. Connect the battery and close the bonnet.

GEARBOX ASSEMBLY

– Overhaul **37.20.04**

Service tools: ST1136 47, S337 or 18G 1205, 18G 1208, 18G 1199, S145C, 18G 1197, 3072 or S4235A, S4235A-2, 18G 47BP, 18G 1208, 18G 1198A

Dismantling

1. Remove the gearbox from the car. 37.20.01.
2. Remove the clutch housing. 37.12.07.
3. Remove the top cover and spool interlock plate.
4. Remove the rear extension. 37.12.01.
5. Remove the gear selector mechanism. 37.16.37.
6. Remove the selector shaft and selector forks.
7. Using tool 18G 1208 displace and remove the layshaft, allowing the laygear to drop to the bottom of the gear case.

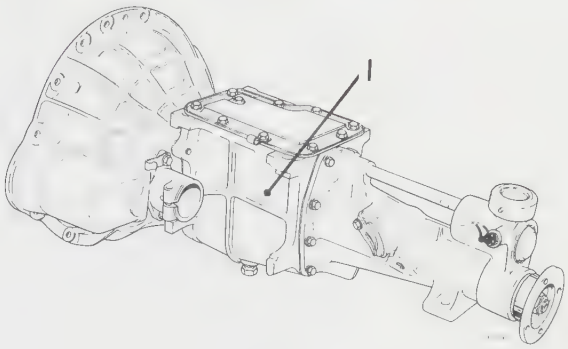

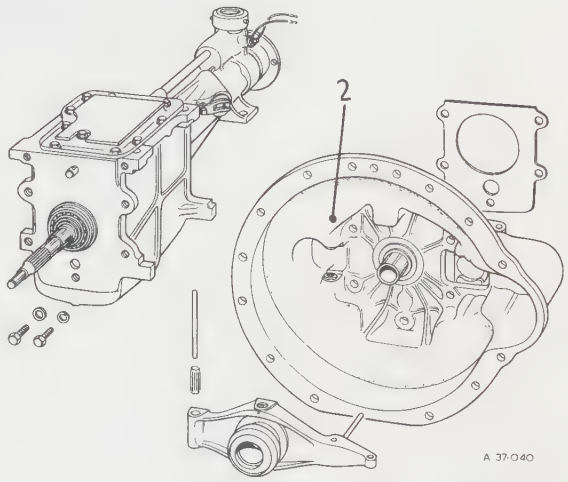

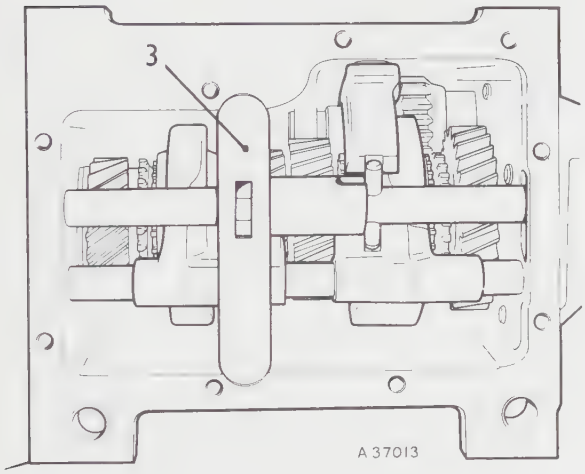

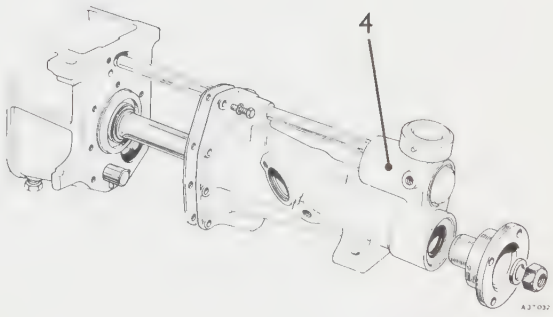

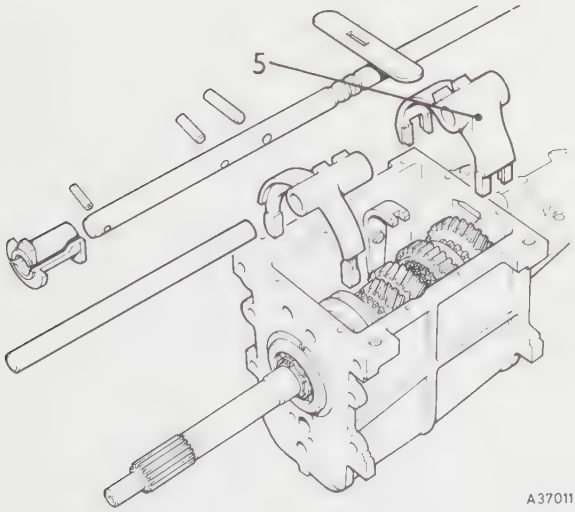

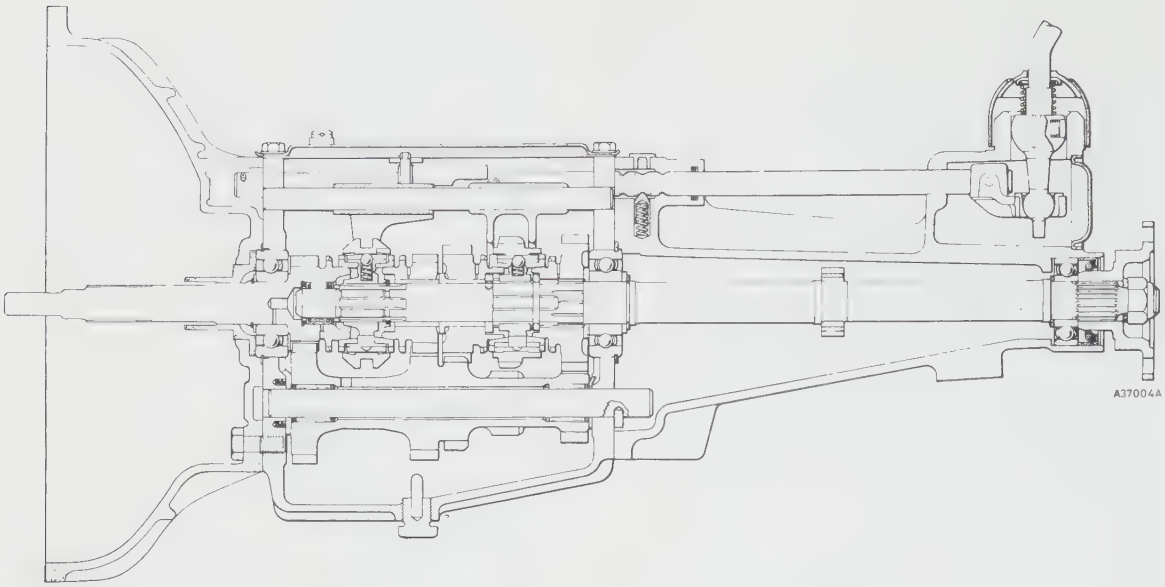

8. Remove the first motion shaft. 37.20.16.
9. Fit the steady bracket of 18G 47BP to the front of the gear case using two clutch housing bolts. Ensure that the centre adjusting bolt and locknut are fully released before tightening the tool securing bolts.
10. Adjust the centre bolt to locate and support the mainshaft spigot. Tighten the locknut.
11. Remove the bolt and spring washer securing the reverse/idler gear spindle.
12. Withdraw the reverse/idler gear spindle and spacer and remove the reverse/idler gear.

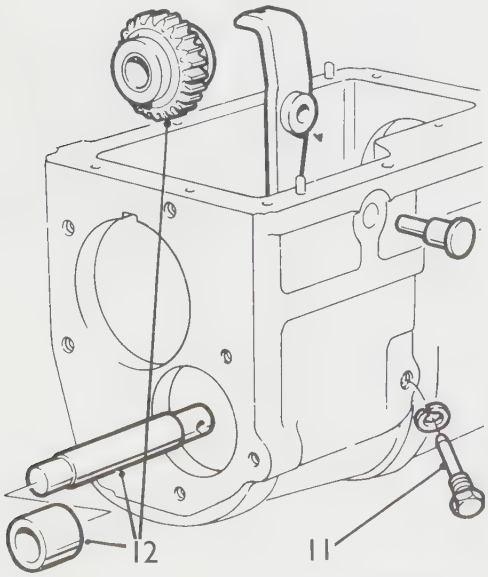

A37-26

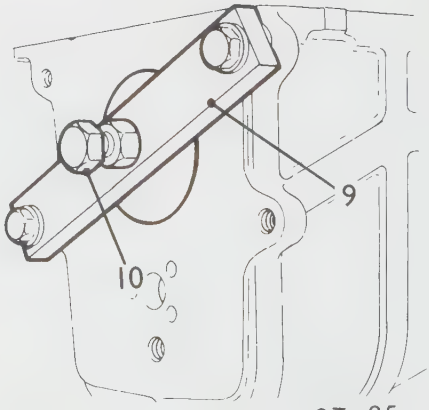

A37-25

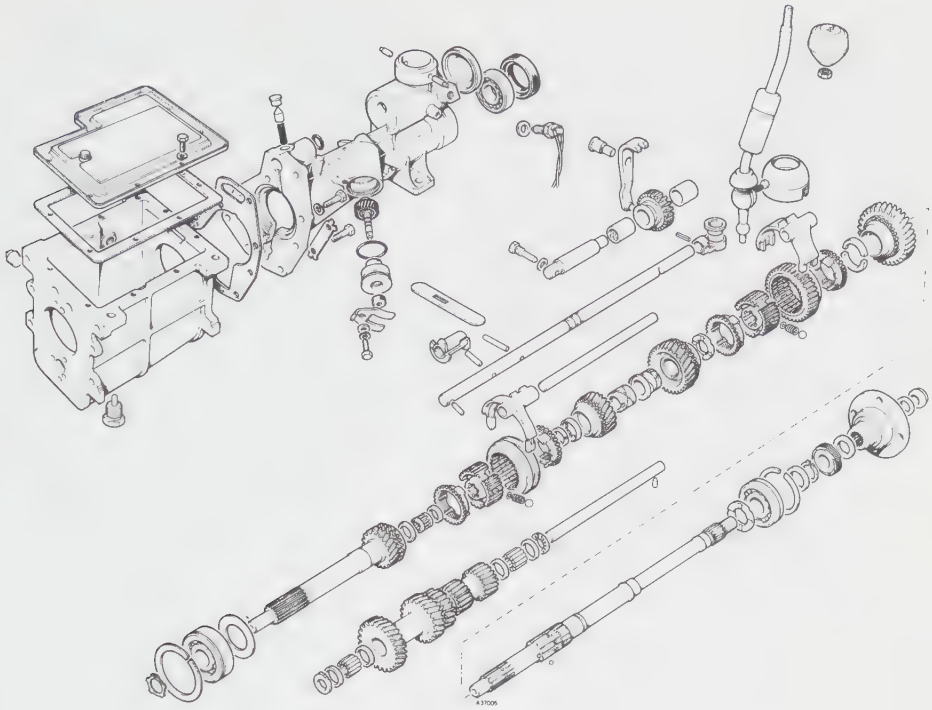

13. Release the circlip securing the mainshaft bearing to the mainshaft.
14. Remove the snap ring fitted to the mainshaft bearing.
15. Using Tool 47 and bearing remover of 18G 47BP, remove the mainshaft bearing, selective washer, circlip and speedometer gear from the mainshaft.
16. Remove the steady bracket of Tool 18G 47BP from the front of the gear case. Do not alter the setting of the centre bolt and locknut prior to reassembly.
17. Tilt the mainshaft and withdraw complete with gears through the top cover aperture.
18. Remove the laygear and thrust washers.
19. Remove the reverse gear operating lever.
20. Remove from the mainshaft.
    a. Thrust washer and 1st speed gear.
    b. 1st speed synchro – cup.
    c. Two, split collars.
    d. 3rd/4th speed synchro-hub and sleeve assembly.
    e. 3rd speed synchro-cup.
    f. Using Tool 18G 1199 expand the circlip retaining 3rd speed gear. Carefully lever off 3rd speed gear, and bush, thrust washer, circlip, and Tool.
    g. 2nd speed gear and bush.
    h. 2nd speed synchro-cup.
    i. Selective washer.
    j. Using a magnet extract the ball locating the selective washer from its recess in the mainshaft.
    k. 1st/2nd speed synchro-hub and sleeve assembly.
21. Scribe the sleeve and synchro-hub assemblies of 1st/2nd and 3rd/4th speeds to ensure reassembly in original locations. Separate the sleeves from the hubs ensuring that care is taken to capture the three balls and springs in each assembly.

    Note: In some instances shims may be fitted below the springs.
22. Remove the 25 needle rollers from each end of the laygear cluster.
23. Remove the needle roller retaining rings from the laygear (only if renewal is intended).
24. Press out the bush from the reverse/idler gear.
25. Remove the reverse operating lever pivot pin from the gear case (only if renewal is intended).

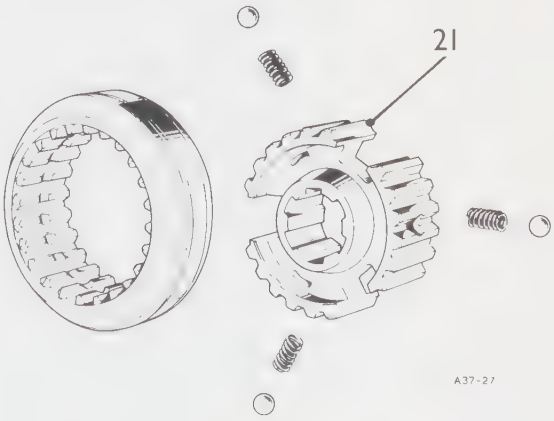

Preparation for reassembly

26. Thoroughly clean and examine all components. Obtain new parts as necessary. Renew all gaskets and seals.
27. If required fit new needle roller retaining rings to the laygear to the dimensions shown. Care must be taken not to damage the laygear bore.
28. Using grease install the needle rollers (25 each side) in the laygear. Fit dummy layshaft, Tool 18G 1208.
29. Fit the shims (if removed), springs and balls to the 1st/2nd speed synchro-hub and slide the sleeve into position observing the scribe marks made prior to dismantling. The teeth of the outer member must be fitted adjacent to the larger boss of the synchro-hub.
30. Check the load required to shift the sleeve in either direction. This should be within 19–27 lb (8.7–12.2 kg).
    Add or remove shims to obtain required effort.
31. Fit the shims (if removed), springs, and balls to the 3rd/4th speed synchro-hub and slide the sleeve into position observing the scribe marks made prior to dismantling.
32. Check the load required to shift the sleeve in either direction. This should be within 19–21 lb (8.7–9.5 kg). Add or remove shims to obtain required effort.
33. Fit a new brush to the reverse/idler gear. The bush should be flush with the boss opposite the collar of the operating lever. Ream the bush within 0.6585–0.6592 in (16.7279–16.8011 mm) diameter.

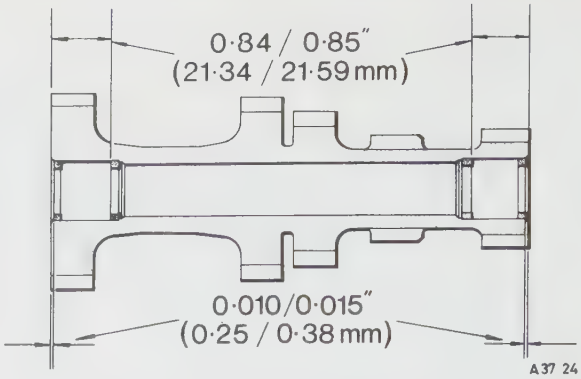

34. Check that the following requirements obtain:
    a. Laycluster end-float – 0.007–0.015 in (0.178–0.381 mm).
    b. 1st gear end-float (between split collars and thrust washer) – 0.004–0.013 in (0.102–0.33 mm).
    c. 2nd gear end-float (on bush) – 0.002 in (0.051 mm).
    d. 3rd gear end-float (on bush) – 0.002–0.006 in (0.051–0.152 mm).
    e. Mainshaft bushes (2nd and 3rd gears) – 0–0.006 in (0–0.051 mm). Adjust clearances by means of selective washer. Four alternative washers are available in 0.003 in (0.076 mm) steps.
35. Renew the first motion shaft bearing. 37.20.17.

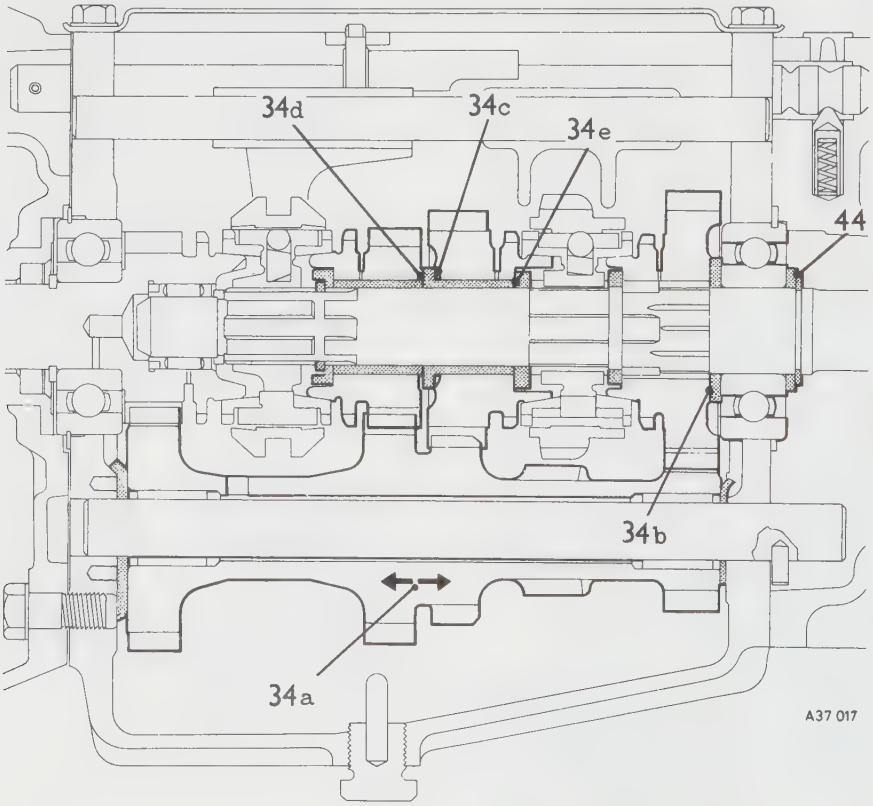

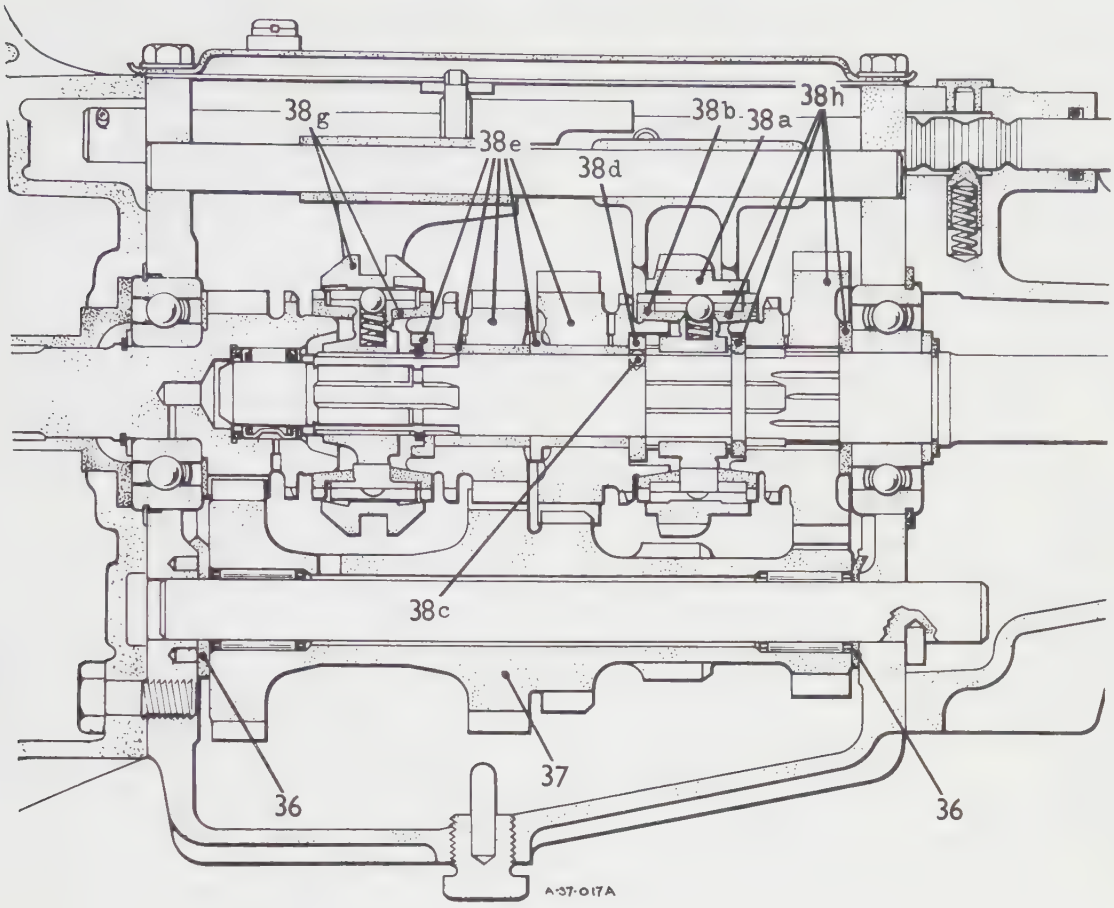

Reassembling

36. Locate the laygear front and rear thrust washers in position ensuring that their respective tabs engage in the casing slots.
37. Place the laygear cluster complete with dummy shaft in the bottom of the gear case. (Large gear to front of case.)
38. Fit the following components to the mainshaft.
    a. 1st/2nd speed synchro assembly (larger hub boss to front of gearcase).
    b. 2nd speed synchro-cup.
    c. Locating ball for selective washer.
    d. Selective washer, ensuring groove on washer inner diameter aligns with ball.
    e. 2nd gear and bush (bush collar to front of gearbox), 3rd gear and bush, and thrust washer (rim of washer to front of gearbox).
    f. Using Tool 18G 1198 fit the retaining circlip ensuring that the inclined end of the clip faces forward and the clip end aligns with edge of the mainshaft spline.

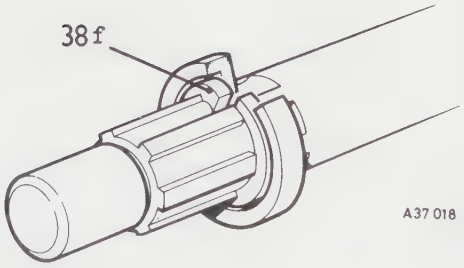

    g. 3rd gear synchro-cup, 3rd gear synchro assembly (larger boss to hub of front of gearbox).
    h. 1st speed synchro-cup, split collars, 1st gear and thrust washer.
39. Tilt the mainshaft (rear end leading) into position through the top cover aperture.
40. Place the reverse gear in the bottom of the gear case and fit the reverse operating lever.

41. Fit the steady bracket of 18G 47BP to the front of the gear case engaging the mainshaft spigot.

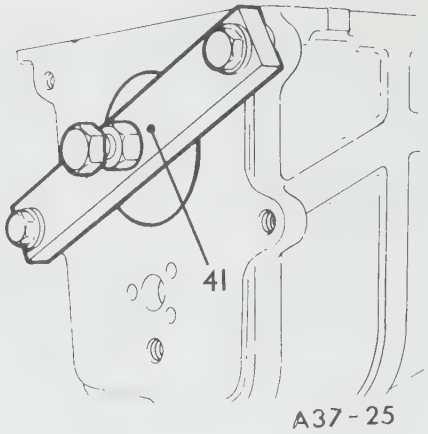

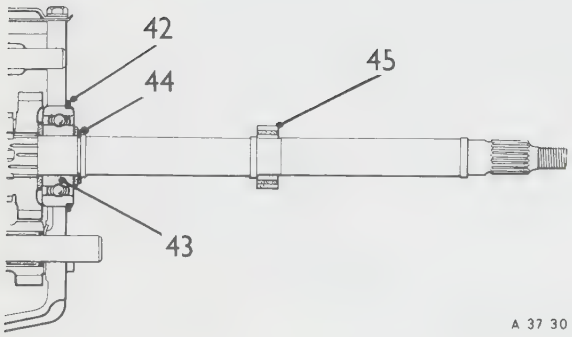

42. Fit the snap ring to the mainshaft centre bearing and slide the bearing (snap ring trailing) on to the mainshaft.
43. Drive the bearing into position using Tool 18G 1197 and the bearing replacer of 18G 47BP.
44. Fit the selective washer and circlip. Four selective washers are available in 0.003 in (0.076 mm) steps. Mainshaft end-float should not exceed 0.002 in (0.051 mm).
45. Fit the speedometer gear.
46. Remove the steady bracket of 18G 47BP from the front of the gear case and fit spigot bearing and rings, 4th speed synchro-cup, and the 1st motion shaft.
47. Fit the layshaft, removing the dummy shaft in the process.
48. Fit the reverse gear, reverse gear shaft and spacer.

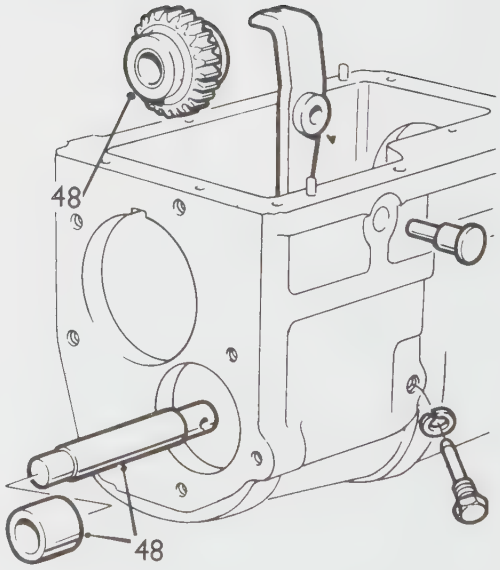

49. Fit the selector forks and shaft.
50. Fit the gear selector mechanism. 37.16.37.
51. Fit the rear extension and drive flange. 37.12.01.
52. Fit the three thrust springs to the laygear front bearing.
53. Fit the clutch housing gasket, clutch housing, clutch release fork and bearing. 37.12.07. Ensure splines of 1st motion shaft do not damage seal.
54. Fit the gear case drain plug and fill to level plug with fresh oil.
55. Fit the spool interlock plate, gasket and top cover.

[**NOTE:** Before you install the gearbox cover, thoroughly lubricate all the gears and other transmission internal parts with a liberal application of gear oil. Doing this will prevent undue wear when the transmission is first returned to service. Hand-turn the mainshaft so that the lubricant works into the synchronizer assemblies and the bearings.]

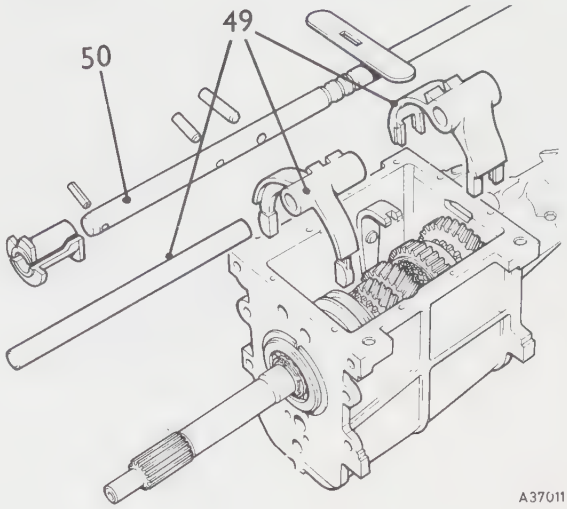

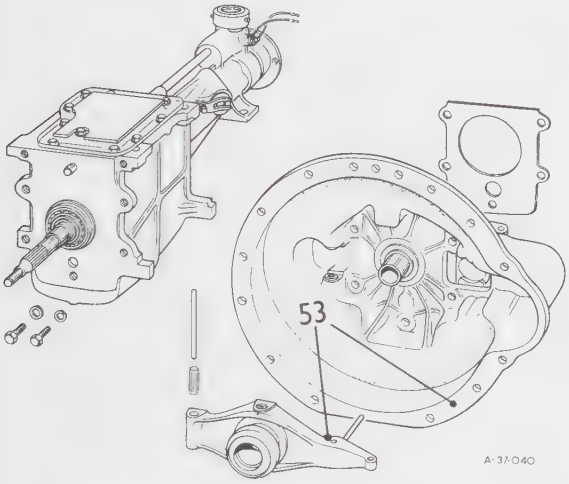

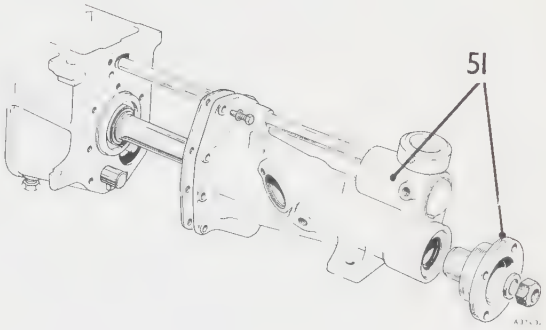

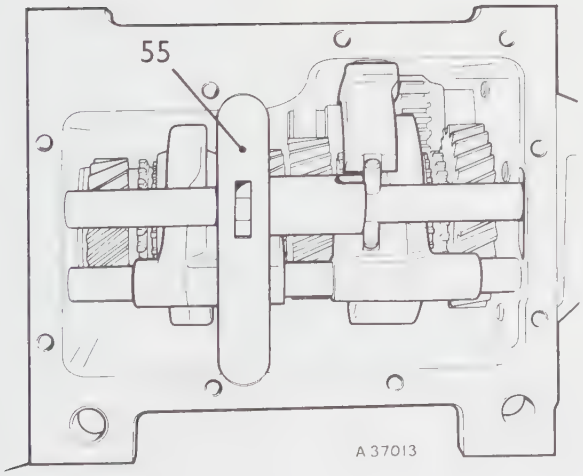

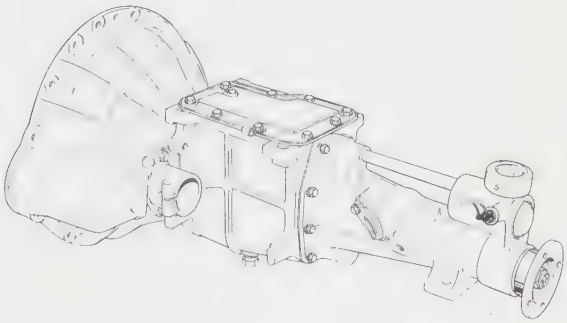

SYNCHRONIZER ASSEMBLIES

– Remove and refit **37.20.07**

Service tools: Refer operation 37.20.04

Removing

Instructions 1 to 17 and 20a to 20h.

Refitting

Instructions 38 to 40, 42 to 50 and 52 to 55.

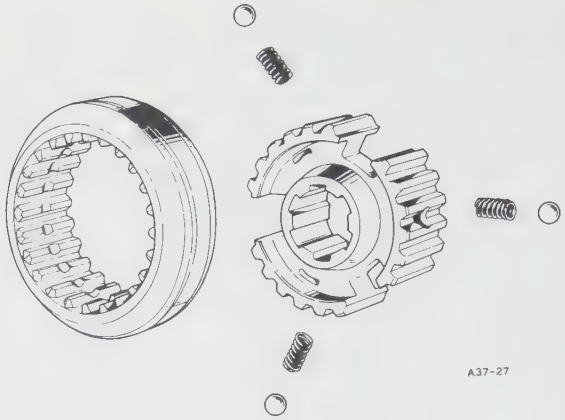

FIRST MOTION SHAFT

–Remove and refit **37.20.16**

Service tools: 18G 1208, 3072 or S4235A, S4235A-2

Removing

1. Remove the gearbox from the car. 37.20.01.
2. Remove the rear extension. 37.12.01.
3. Remove the clutch housing. 37.12.07.
4. Insert tool 18G 1208 and push out the layshaft.
5. Allow the laygear with tool 18G 1208 to drop to the bottom of the gearbox case.
6. Fit tool 3072 and adaptor S4235A-2 to the first motion shaft.
7. Extract the first motion shaft from the gearbox.
8. Remove the spigot bearing and spacers (2) from the mainshaft.
9. Remove the 4th gear synchromesh cup.

Refitting

10. Reverse instructions 1 to 9.

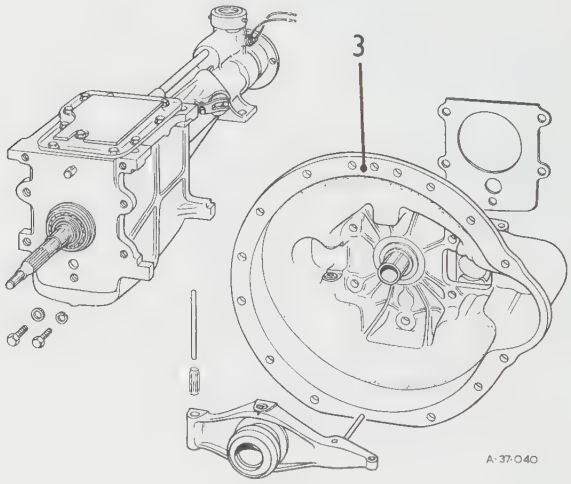

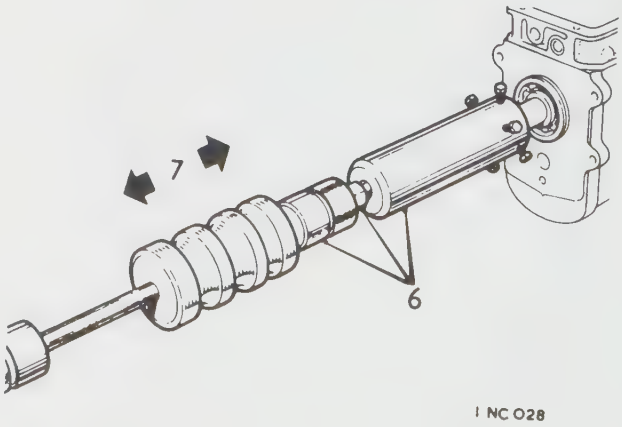

FIRST MOTION SHAFT BEARING

– Remove and refit **37.20.17**

Service tools: 18G 1208, 3072 or S4235A, S4235A-2

Removing

1. Remove the first motion shaft. 37.20.16.
2. Remove the bearing circlip.
3. Remove the bearing snap ring.
4. Using tool S4235A and adaptor S4235A-2 remove the bearing from the shaft.
5. Remove the oil flinger.

Refitting

6. Reverse instructions 1 to 5. Use grease to retain the oil flinger when fitting the bearing to the shaft.

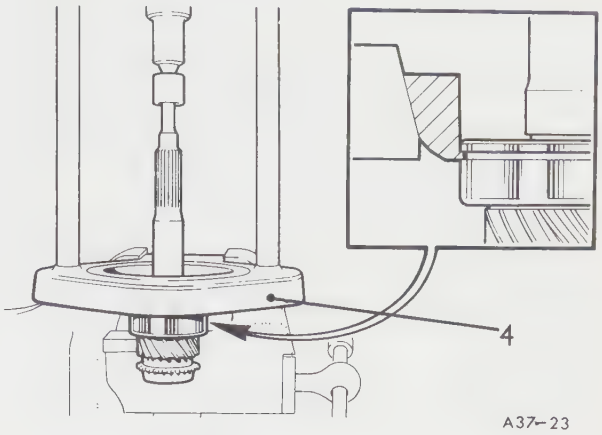

LAYSHAFT

– Remove and refit **37.20.19**

Service tools: S337 or 18G 1205, 18G 1208

Removing

1. Remove the gearbox from the car. 37.20.01.
2. Remove the clutch housing. 37.12.07.
3. Remove the top cover and spool interlock plate.
4. Remove the rear extension. 37.12.01.
5. Using tool 18G 1208 displace and remove the layshaft.

Refitting

6. Reverse instructions 1 to 5.

LAYSHAFT BEARING

– Remove and refit **37.20.22**

Service tools: S337 or 18G 1205, 18G 1208, 18G 1199, S145C, 18G 1197, 3072, or S4235A, S4235A-2

As operation 37.20.04, instructions 1 to 10, 13 to 18, 22, 23, 27, 28, 36, 37 and 41 to 55.

MAINSHAFT BEARING

– Remove and refit **37.20.26**

Service tools: S337 or 18G 1205, 18G 1208, 18G 1197

Removing

As operation 37.20.04. Instructions 1 to 4 and 6 to 16.

Refitting

As operation 37.20.04. Instructions 42 to 48, 50, and 52 to 55.

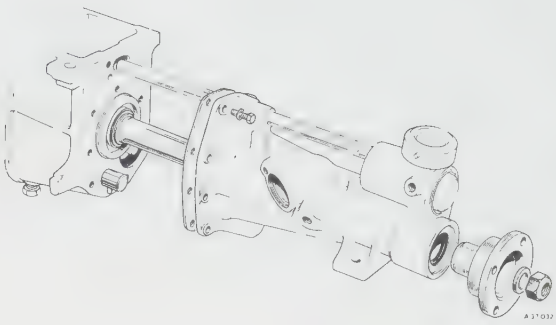

REAR OIL SEAL

– Remove and refit **37.23.01**

Service tools: S337 or 18G 1205

Removing

1. Raise the car.
2. Remove the drive flange. 37.10.01.
3. Prise out the oil seal.

Refitting

4. Evenly install the new seal in the gearbox rear extension ensuring that it is flush with the rear face of the extension housing. Note that the seal lips must be towards the gearbox.
5. Lubricate the seal lips and driving flange seal contact area.
6. Fit the drive flange. 37.10.01.
7. Lower the car.

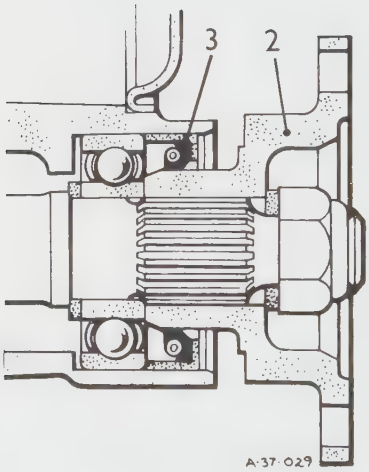

FIRST MOTION SHAFT OIL SEAL

– Remove and refit 37.23.04

Removing

1. Remove the gearbox from the car. 37.20.01.
2. Remove the clutch housing. 37.12.07.
3. Remove the oil seal.

Refitting

4. Evenly install a new oil seal.
5. ENSURE that the splines of the first motion shaft are protected by tape to prevent damage to the seal lip when the clutch housing is fitted.
6. Fit the clutch housing. 37.12.07.
7. Remove the tape from the splines of the first motion shaft.
8. Fit the gearbox to the car. 37.20.01.

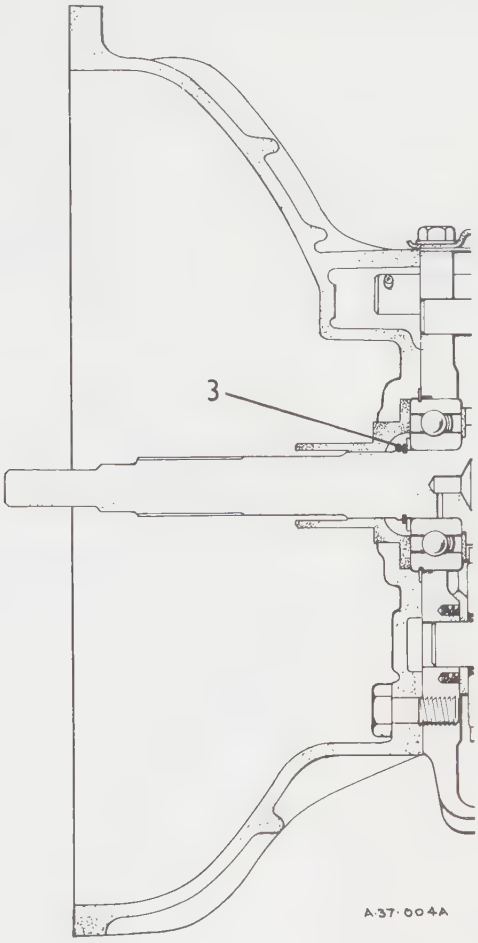

GEAR CHANGE ROD OIL SEAL

– Remove and refit 37.23.10

Service tools: S337 or 18G 1205

As operation 37.16.37.

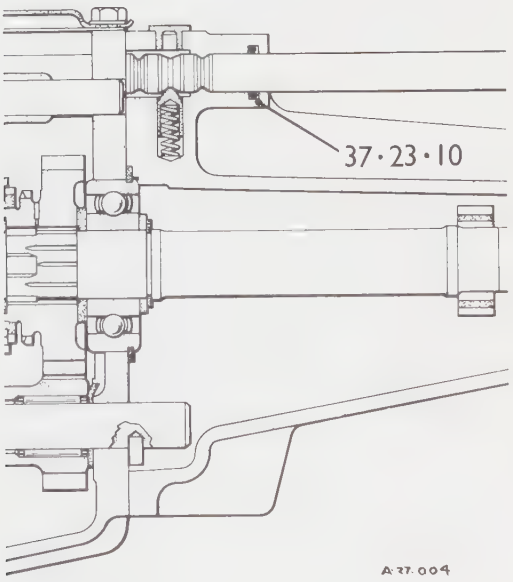

SPEEDOMETER DRIVE GEAR

– Remove and refit **37.25.01**

Service tools: S337 or 18G 1205, 18G 1197

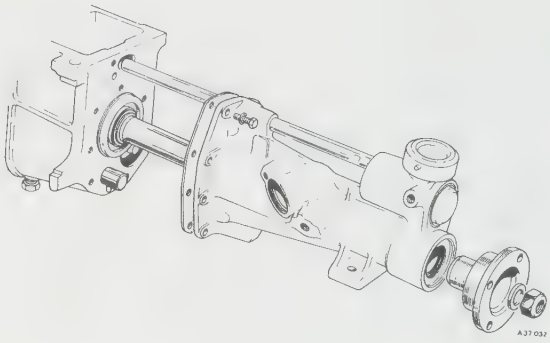

Removing

1. Remove the gearbox from the car. 37.20.01.
2. Remove the rear extension. 37.12.01.
3. Remove the speedometer drive gear.

Refitting

4. Using tool 18G 1197 drive the speedometer gear into position on the mainshaft ensuring that it registers against the step on the mainshaft.
5. Reverse instructions 1 and 2.

SPEEDOMETER DRIVE PINION

– Remove and refit **37.25.05**

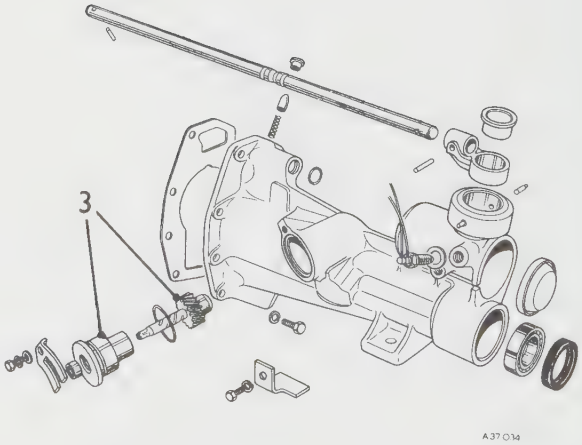

Removing

1. Remove the bolt and spring washer retaining the speedometer cable clamp plate.
2. Release the speedometer cable from the drive pinion.
3. Remove the pinion housing and pinion from the gearbox rear extension.

Refitting

4. Reverse instructions 1 to 3. Renew the pinion housing 'O' ring if necessary.

LIST OF OPERATIONS

Control orifice
– clean 40.16.19

Oil pump
– overhaul 40.18.04
– remove and refit 40.18.01

Oil seal rear
remove and refit 40.15.01

Operating pistons
– overhaul 40.16.29
– remove and refit 40.16.24

Overdrive assembly
– hydraulic pressure test 40.20.01
– overhaul or dismantle 40.20.10
– remove and refit 40.20.07

Pressure filter
– remove and refit 40.10.08

Pump non-return valve
– overhaul 40.16.14
– remove and refit 40.16.10

Relief valve and dashpot assembly
– overhaul 40.16.07
– remove and refit 40.16.04

Solenoid and operating valve
overhaul 40.22.13
remove and refit 40.22.04
– test 40.22.01

Speedo drive gear
remove and refit 40.25.01

Sump filter
– remove and refit 40.10.01

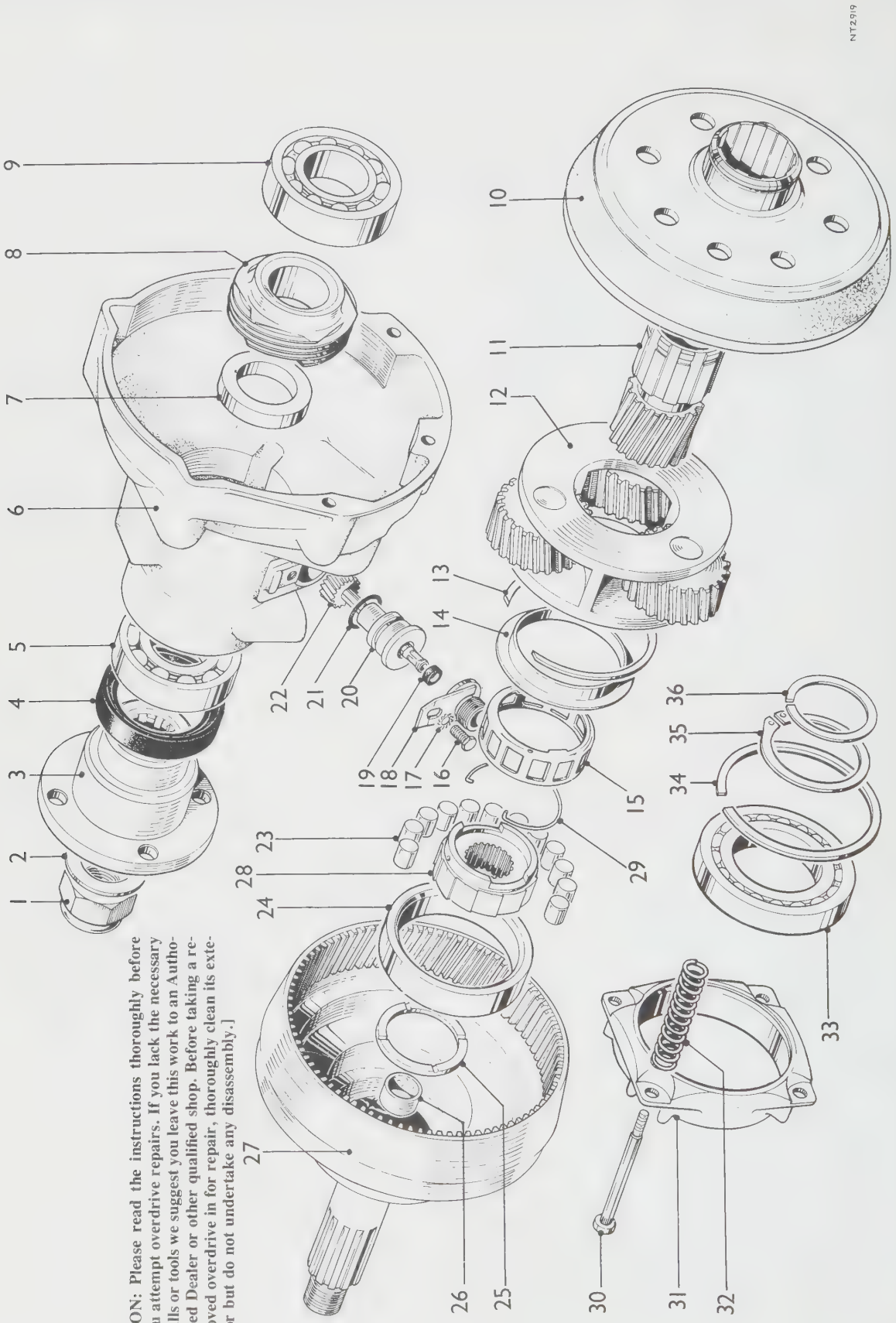

[CAUTION: Please read the instructions thoroughly before you attempt overdrive repairs. If you lack the necessary skills or tools we suggest you leave this work to an Authorized Dealer or other qualified shop. Before taking a removed overdrive in for repair, thoroughly clean its exterior but do not undertake any disassembly.]

J TYPE OVERDRIVE COMPONENTS

1. Locknut
2. Washer
3. Drive flange
4. Oil seal
5. Annulus rear ball race
6. Rear case
7. Spacer
8. Speedometer driving gear
9. Annulus front ball race
10. Clutch sliding member
11. Sun wheel
12. Planet carrier assembly
13. Circlip
14. Oil thrower
15. Unidirectional clutch cage
16. Bolt
17. Star washer
18. Speedometer retaining clamp
19. Oil seal
20. Speedo driven gear housing
21. 'O' ring
22. Speedometer driven gear
23. Unidirectional clutch rollers
24. Unidirectional clutch roller track
25. Thrust washer
26. Mainshaft bush
27. Annulus
28. Uni-directional clutch spring
29. Uni-directional clutch spring
30. Thrust pin
31. Thrust ring
32. Clutch return springs
33. Thrust ball race
34. Retaining circlip
35. Circlip for sliding member
36. Circlip for sun wheel

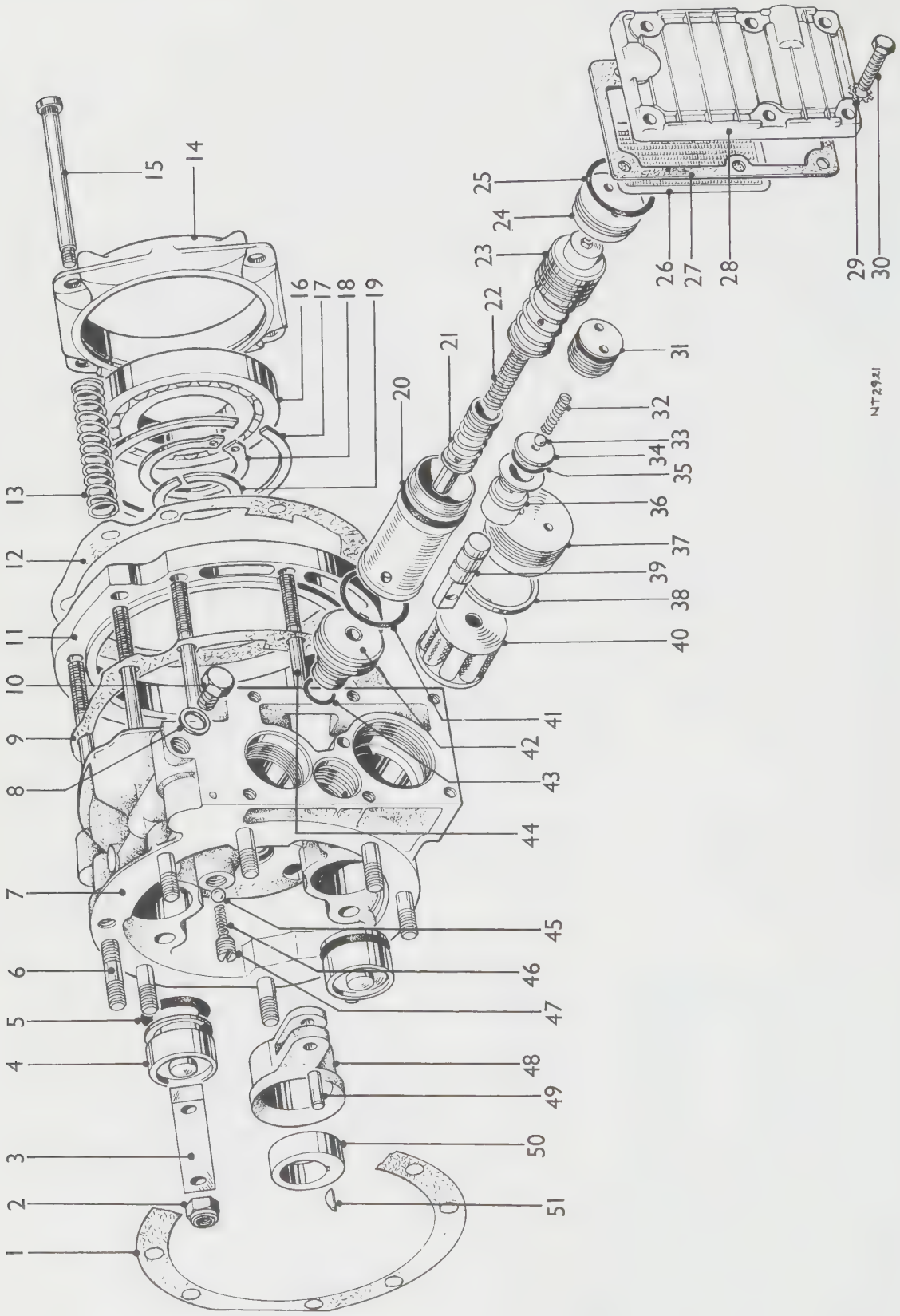
1
2
3
4
5
6
7
8
9
10
11
12
13
14
15
16
17
18
19
20
21
22
23
24
25
26
27
28
29
30
31
32
33
34
35
36
37
38
39
40
41
42
43
44
45
46
47
48
49
50
51
NT2921

J TYPE OVERDRIVE COMPONENTS

1. Gasket
2. Locknut
3. Bridge piece
4. Operating piston
5. 'O' ring
6. Stud
7. Main case
8. Washer (copper)
9. Gasket
10. Pressure tapping plug
11. Brake ring
12. Gasket
13. Clutch return spring
14. Thrust ring
15. Thrust pin
16. Thrust ball race
17. Retaining circlip
18. Circlip for sliding member
19. Circlip for sun wheel
20. Dashpot sleeve
21. Relief valve assembly
22. Double dashpot spring
23. Dashpot piston assembly
24. Dashpot plug
25. 'O' ring
26. Sump filter
27. Sump gasket
28. Sump
29. Star washer
30. Bolt
31. Pump plug
32. Non-return valve spring
33. Steel ball
34. Non-return valve seat
35. 'O' ring
36. Pump body
37. Pressure filter plug
38. Pressure filter washer
39. Pump plunger
40. Pressure filter
41. 'O' ring
42. Relief valve body
43. 'O' ring
44. Stud
45. Steel ball
46. Lubrication relief valve spring
47. Lubrication relief valve plug
48. Pump strap
49. Pump in
50. Cam
51. Woodruff key

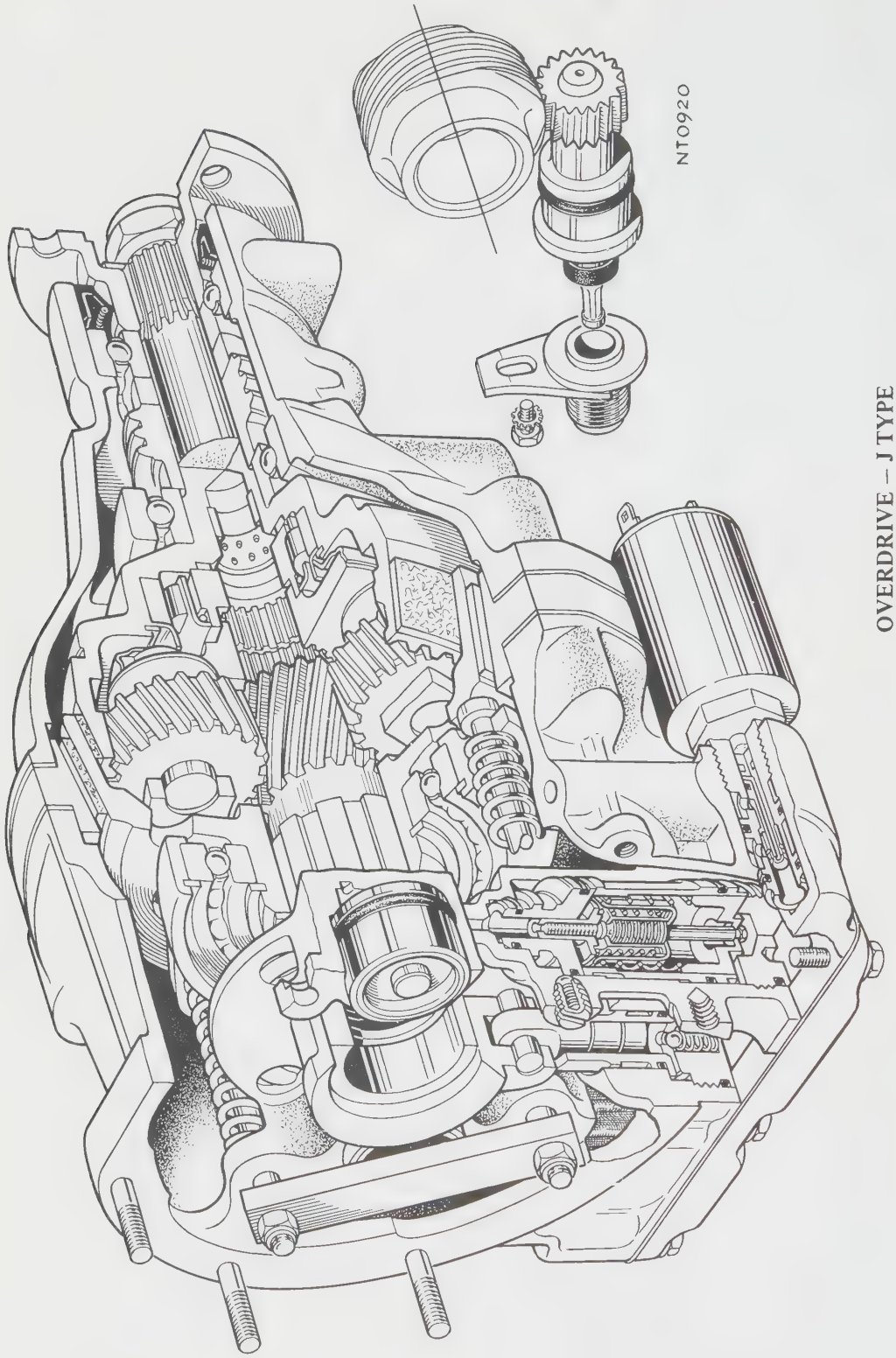

OVERDRIVE – J TYPE

INTRODUCTION

The overdrive is an additional gear unit between the gearbox and propeller shaft. When in operation it provides a higher overall gear ratio than that given by the final drive. The primary object of an overdrive is to provide open road cruising at an engine speed lower than it would be in normal top gear. This reduced engine speed gives a considerable reduction in petrol consumption and increase in engine life. Overdrive may also be used on the indirect gears to enhance performance or to provide easy and clutchless gear-changing, for example in town traffic.

The overdrive is operated by an electric solenoid controlled by a switch, fitted in the gear-lever knob. An inhibitor switch is fitted in the electrical circuit to prevent engagement of overdrive in reverse, and some or all of the indirect gears.

Overdrive can be engaged or disengaged at will at any speed, but usually above 30 m.p.h. (48 kph) in top gear. It should be operated without using the clutch pedal and at any throttle opening because the unit is designed to be engaged and disengaged when transmitting full power. The only precaution necessary is to avoid disengaging overdrive at too high a road speed, particularly when using it in an indirect gear, since this would cause excessive engine revolutions.

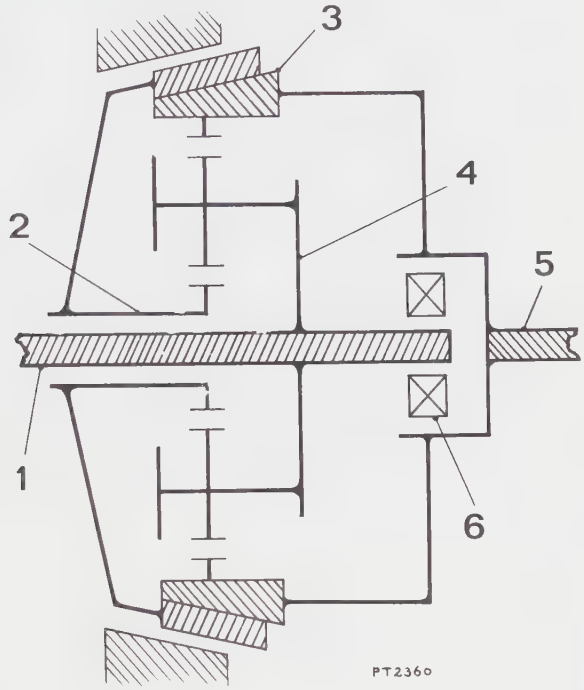

KEY

1. Input shaft connected to planet carrier
2. Sun gear
3. Annulus
4. Planet carrier
5. Output shaft connected to annulus
6. Roller clutch

WORKING PRINCIPLES

The overdrive gears are epicyclic and consist of a central sun wheel meshing with three planet gears which in turn mesh with an internally toothed annulus. All gears are in constant mesh. The planet carrier is attached to the input shaft and the annulus is integral with the output shaft.
The unit is shown diagrammatically below.
An extension of the gearbox mainshaft forms the overdrive input shaft. Forward direct drive power is transmitted from this shaft to the inner member of uni-directional clutch and then to the outer member of this clutch through rollers which are driven up inclined faces and wedge between the inner and outer members. The outer member forms part of the combined annulus and output shaft.
The gear train is inoperative. A cone clutch is mounted on the externally splined extension of the sun wheel and is loaded in contact with the annulus by a number of springs which have their reaction against the casing of the overdrive unit. The spring load is transmitted to the clutch member through a thrust ring and ball bearing. This arrangement causes the inner friction lining of the cone clutch to contact the outer cone of the annulus and rotate with the annulus, whilst the springs and thrust ring remain stationary. Since the sun wheel is splined to the clutch member the whole gear train is locked, permitting over-run and reverse torque to be transmitted by the cone clutch, without which the uni-directional clutch would give a free-wheel condition. Additional load is imparted to the clutch member, during over-run and reverse, by the sun wheel which, due to the helix angle of its gear teeth, thrusts rearward and has for its reaction member the cone clutch.

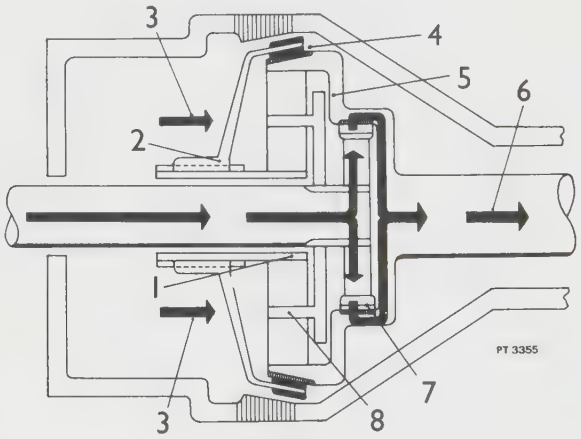

IN DIRECT DRIVE

KEY

1. Sun wheel
2. Sliding cone clutch
3. Spring pressure
4. Annulus and sun wheel locked
5. Annulus
6. To propeller shaft
7. Uni-directional roller clutch
8. Planet wheels

The diagram below shows the position of the cone clutch when overdrive is engaged.

It will be seen that it is no longer in contact with the annulus but has moved forward so that its outer friction lining is in contact with a brake ring forming part of the overdrive casing. The sun wheel to which the clutch is attached is therefore held stationary. The output shaft and annulus continue to rotate at the same speed, so the planet wheels rotate on their axes around the stationary sun wheel, reducing the planet carrier and input shaft speed. The uni-directional clutch permits the outer member to over-run the inner member.

This condition give a lower engine speed for a given road speed.

Movement of the cone clutch in a forward direction is effected by means of hydraulic pressure which acts upon two pistons when a valve is opened, by operating the driver-controlled selector switch. This hydraulic pressure overcomes the springs which load the clutch member on to the annulus and causes the clutch to engage the brake ring with sufficient load to hold the sun wheel at rest. Additional load is imparted to the clutch in a forward direction due to the helix angle of the gear teeth.

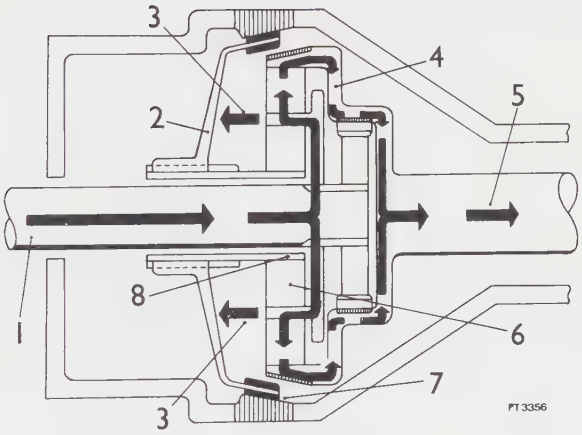

IN OVERDRIVE

KEY

1. From gearbox
2. Sliding cone clutch
3. Hydraulic pressure
4. Annulus driven by planet gears
5. To propeller shaft
6. Planet wheels
7. Locked cone clutch holds sun wheel
8. Sun wheel

SOLENOID AND OPERATING VALVE

Energizing

The solenoid and operating valve is a self-contained factory sealed unit, situated on the main case of the overdrive.

The solenoid has a single coil, encapsulated and completely waterproof, with a continuous current consumption of approximately 2 amperes. There are no electrical contacts in the solenoid.

In direct drive a residual pressure of approximately 20 lb/in^2 (1.4 kg/cm^2) maintains the system in primed condition and provides lubrication. This is achieved by the relief valve piston reacting on the residual pressure spring. When the overdrive is engaged, pressure increases to a pre-determined operating pressure of 375–425 lb/in^2. When the solenoid is energized, its valve opens and oil which is at residual pressure is directed via passage 'Z' to the bottom of the dashpot piston. This causes the dashpot piston to rise and compress the dashpot spring, causing a progressive increase in hydraulic pressure until the piston reaches its stop, by which time the relief valve spring has been compressed to its working length, thus giving full operating pressure. This pressure causes the operating pistons to move forward, overcoming the clutch springs, and engages the cone clutch in the brake ring.

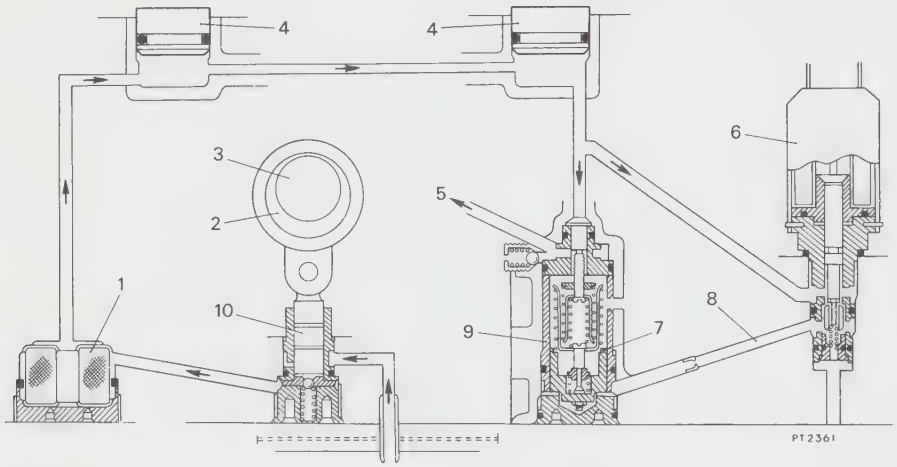

KEY

1. Pressure filter
2. Cam
3. Input shaft
4. Operating pistons
5. To central lubrication
6. Solenoid valve
7. Dashpot
8. Passage 'Z'
9. Relief valve
10. Pump

De-energizing

When the solenoid is de-energized its valve is closed by a spring, cutting off the oil supply from the pump to the dashpot. Oil is now exhausted via the control orifice in passage 'Z' which allows the relief valve spring to relax to its direct drive position. The dashpot spring moves the dashpot piston to its stop, allowing the system pressure to progressively drop which enables the clutch springs to move the cone clutch gently into contact with the annulus.
The residual pressure of approximately 20 lb/in^2 (1.4 kg/cm^2) is now maintained in direct drive.

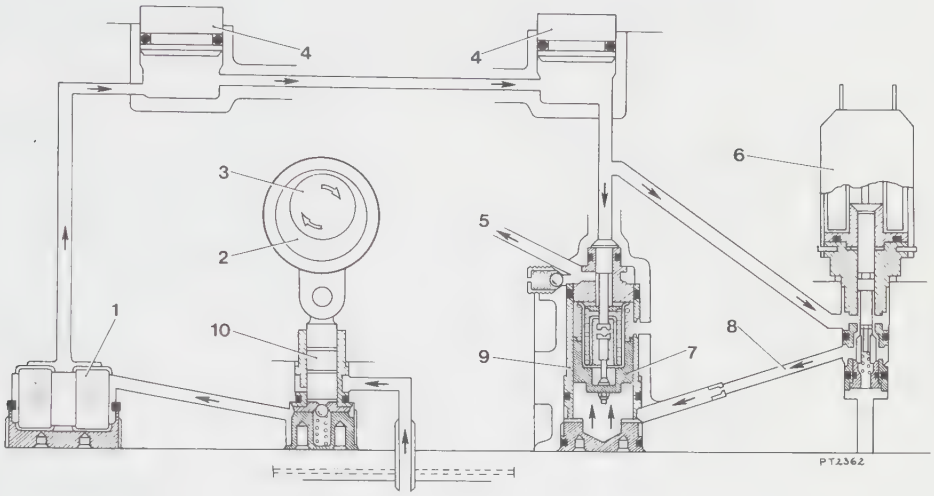

KEY

1. Pressure filter
2. Cam
3. Input shaft.
4. Operating pistons
5. To central lubrication
6. Solenoid valve
7. Dashpot
8. Passage 'Z'
9. Relief valve
10. Pump

HYDRAULIC SYSTEM

Hydraulic pressure is developed by a plunger-type pump, cam-operated from the input shaft. The pump draws oil from an air-cooled sump through a suction filter and delivers it via the non-return valve, through a pressure filter to the operating pistons, solenoid valve and relief valve. Incorporated in the relief valve is a spring dashpot which ensures smooth overdrive engagement and disengagement under varying conditions.

LUBRICATION SYSTEM

Oil is discharged through the relief valve direct to an annular channel in the centre of the main casing and then through drillings in the mainshaft to the annulus spigot bearing. Immediately in front of the spigot bearing a radial drilling passes oil through the uni-directional clutch from here it is directed by an oil thrower into a catcher disc on the planet carrier and to the planet bearings via the hollow planet bearing pins.
The pressure in the lubrication passage is controlled by the lubrication relief valve.

MAINTENANCE

The level of oil should be checked at the gearbox. To drain, the sump of the overdrive must be removed as well as the gearbox drain plug. This will provide access to the suction and pressure filters, which should also be removed and cleaned before replenishing with new oil.
Following complete draining and refilling, run the transmission for a short period, then re-check the oil level.
It is essential that only the approved lubricant is used for topping-up and refilling. ON NO ACCOUNT SHOULD ANY ANTI-FRICTION ADDITIVES BE USED.

CLEANLINESS

Scrupulous cleanliness must be maintained throughout all servicing operations. Even minute particles of dust, dirt or lint from cleaning cloths may cause malfunction. When the overdrive and gearbox have a common oil supply, it is naturally as important that the same high standards of cleanliness must be maintained when servicing the gearbox. Great care must be taken to avoid the entry of dirt when topping-up or refilling.
For cleaning, use petrol or paraffin ONLY, and on no account should water be used.

40.00.10J

FAULT DIAGNOSIS AND RECTIFICATION

Fault	Possible Cause	Remedy
OVERDRIVE DOES NOT ENGAGE	*a.* Insufficient oil in unit.	Top up gearbox/overdrive.
	b. Solenoid not energizing.	Check electrical circuit.
	c. Solenoid energizing but not operating	Remove solenoid and check operation of solenoid valve.
	d. Insufficient hydraulic pressure.	Fit pressure gauge and check operating pressure. Clean filters. Re-seat pump non-return valve if necessary. Check relief valve operation. Clean control orifice. DO NOT PROBE WITH WIRE.
	e. Pump damaged.	Remove and check.
	f. Internal damage.	Remove and examine overdrive.
* OVERDRIVE DOES NOT RELEASE	* THIS CALLS FOR IMMEDIATE ATTENTION. DO NOT REVERSE THE CAR, OR EXTENSIVE DAMAGE MAY BE CAUSED.	
	a. Fault in electrical control circuit.	Check electrical system for closed circuit.
	b. Sticking solenoid valve.	Remove solenoid and check valve.
	c. Residual pressure too high.	Fit pressure gauge and check residual pressure. If pressure is too high, check for sticking relief valve.
	d. Control orifice blocked.	Check and blow through with compressed air. DO NOT PROBE WITH WIRE.
	e. Cone clutch sticking.	Tap the brake ring several times with hide mallet.
	f. Internal damage.	Remove and examine overdrive.
CLUTCH SLIP IN OVERDRIVE	*a.* Insufficient oil in unit.	Top up gearbox/overdrive.
	b. Operating pressure too low.	Fit the pressure gauge and check the pressure. Check the filters, pump non-return ball valve and relief valve.
	c. Sticking solenoid valve.	Check that the control orifice is clear. Remove solenoid and check operation. of solenoid valve.
	d. Worn or glazed clutch linings.	Remove overdrive and examine the linings for mechanical obstruction to movement of cone clutch.
SLOW DIS-ENGAGEMENT OF OVERDRIVE, FREE-WHEELING ON OVER-RUN, SLIP IN REVERSE GEAR	(THESE SYMPTOMS MAY OCCUR TOGETHER OR SEPARATELY)	
	a. Sticking relief valve.	Check for sticking relief valve.
	b. Sticking or partially blocked control valve.	Remove solenoid and check.
	c. Control orifice blocked.	Check to ensure the orifice is clear.
	d. Internal damage.	Remove and examine overdrive.

DIMENSIONS AND CLEARANCES FOR PARTS WHEN NEW

	Dimensions New	Clearances New
CAM		
Outside diameter of cam	1.4590 in/1.4600 in (37.06/37.08 mm)	0.0010 in/0.0030 in (0.025/0.076 mm)
Inside diameter of pump strap	1.4610 in/1.4620 in (37.10/37.13 mm)	
GEARBOX MAINSHAFT		
Diameter of oil transfer	0.9640 in/0.9650 in (24.485/24.511 mm)	0.0010 in/0.0030 in (0.025/0.076 mm)
Inside diameter of main case at oil transfer	0.9660 in/0.9670 in (24.536/24.561 mm)	
Diameter of sun wheel	0.9410 in/0.9430 in (23.901/23.952 mm)	0.0040 in/0.0080 in (0.10/0.20 mm)
Inside diameter of sun wheel bush (where fitted)	0.9470 in/0.9490 in (24.053/24.104 mm)	
Diameter at mainshaft spigot	0.5620 in/0.5625 in (14.274/14.275 mm)	0.0003 in/0.0018 in (0.007/0.042 mm)
Inside diameter at spigot bearing	0.5628 in/0.5638 in (14.274/14.30 mm)	
OPERATING PISTONS		
Operating piston damper	1.2492 in/1.2497 in (31.724/31.75 mm)	0.0003 in/0.0020 in (0.007/0.05 mm)
Operating piston bore diameter	1.2500 in/1.2512 in (31.75/31.751 mm)	
RELIEF VALVE PUMP		
Pump plunger diameter	0.4996 in/0.5000 in (12.674/12.700 mm)	0.0003 in/0.0013 in (0.007/0.032 mm)
Pump body bore	0.5003 in/0.5009 in (12.707/12.722 mm)	
RELIEF VALVE		
Outside diameter of relief valve piston	0.2496 in/0.2498 in (6.339/6.344 mm)	0.0002 in/0.0009 in (0.005/0.022 mm)
Inside diameter of relief valve body	0.2500 in/0.2505 in (6.35/6.36 mm)	
Outside diameter of dashpot piston	0.9370 in/0.9373 in (23.799/23.7999 mm)	0.0002 in/0.0015 in (0.005/0.038 mm)
Inside diameter of dashpot sleeve	0.9375 in/0.9385 in (23.812/23.837 mm)	
SPEEDOMETER PINION		
Outside diameter of speedometer pinion	0.3105 in/0.3110 in (7,88/7,89 mm)	0.00010 in/0.0030 in (0.025/0.076 mm)
Inside diameter of speedometer bearing	0.3120 in/0.3135 in (7.924/7.95 mm)	
MISCELLANEOUS		
Sliding member travel from direct drive to overdrive (measured at bridge pieces)	0.090 in/0.115 in (0.22/2.92 mm)	

SUMP FILTER

– Remove and refit 40.10.01

Removing

1. Remove the six bolts and star washers holding the sump on.
2. Remove the sump.
3. Remove the sump gasket.
4. Pull the filter out.
5. Clean the filter in either paraffin or petrol.

Refitting

6. Push the filter back into position.
7. Refit the sump and gasket.
8. Refit the bolts and star washers and tighten to a torque of 6 lbf ft (0.8 kgf m).

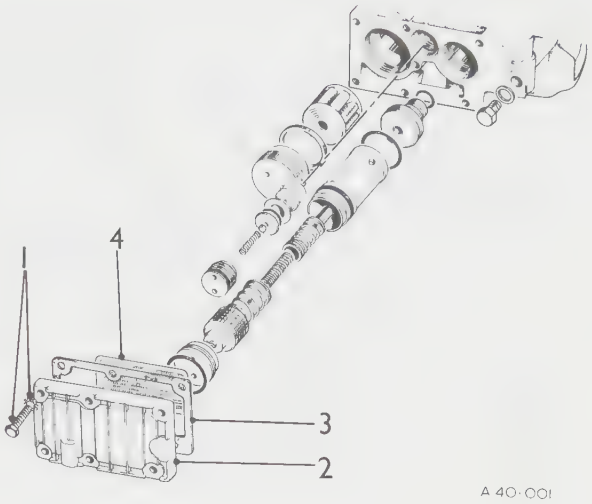

PRESSURE FILTER

– Remove and refit 40.10.08

Removing

1. Remove the sump and suction filter.
2. Remove the pressure filter base plug (largest plug), using tool L354, the filter element will come away with the plug.
3. Remove the aluminium washer which locates on the shoulder in the filter bore.
4. Remove foreign matter and wash the element in petrol or paraffin.
5. Renew the aluminium washer if there are any signs of damage or scoring.
6. Refit the filter and pressure filter base plug, using tool L354.
7. Tighten up until the plug is flush with the base, a torque loading of 16 lbf ft (2.2 kgf m).

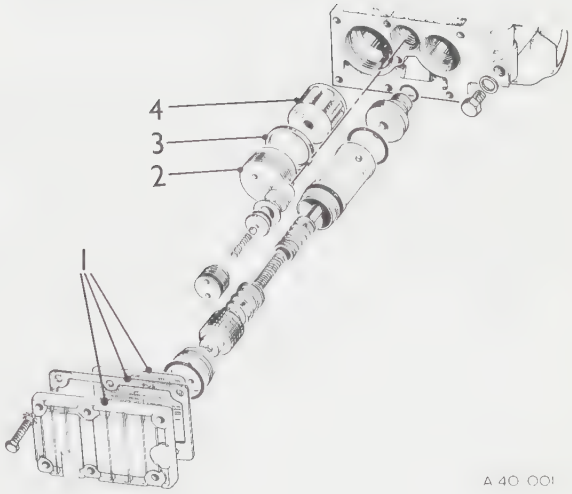

OIL SEAL – REAR

– Remove and refit **40.15.01**

Removing

1. Remove the nut.
2. Remove the washer.
3. Remove the drive flange.
4. Remove the rear oil seal, using special tool L176A with 7657.

Refitting

5. Fit the oil seal using special tool L177 with 550.
6. Refit the drive flange.
7. Refit the washer.
8. Fit a new self-locking nut and tighten to a torque of 80 to 130 lbf ft (11.1 to 18.0 kgf m).

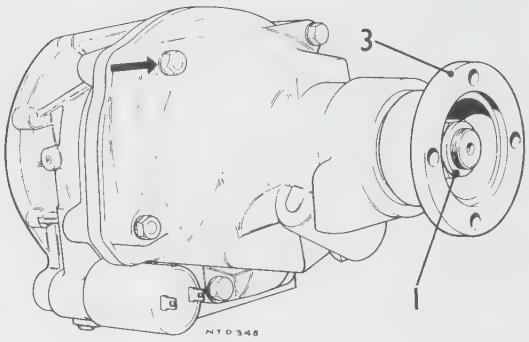

RELIEF VALVE AND DASHPOT ASSEMBLY

– Remove and refit **40.16.04**

NOTE: If the vehicle has been in recent use, care should be taken to avoid hot oil burning the skin.

1. Remove six bolts and star washers securing the sump to the main case.
2. Remove the gasket.
3. Remove the gauze filter.
4. Using Churchill tool L354, remove the relief valve plug.
5. Withdraw the dashpot piston complete with its component springs and cup.
6. Remove the residual pressure spring.
   NOTE: This is the only loose spring in the general assembly.

continued

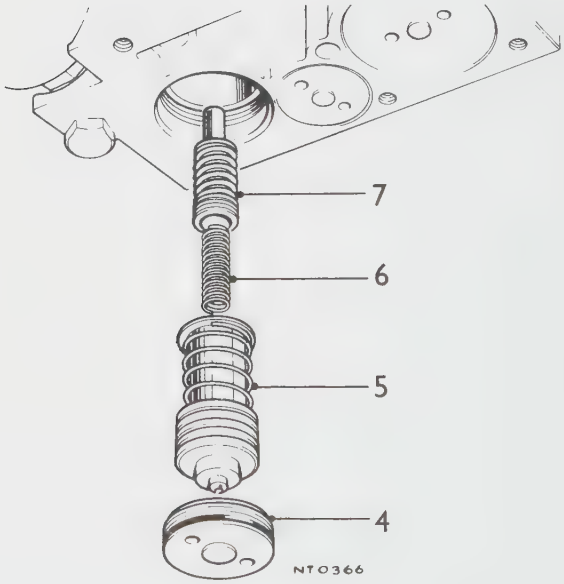

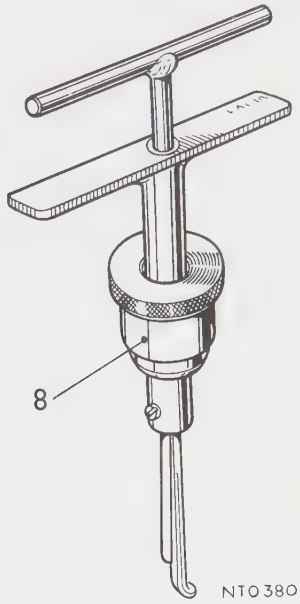

7. The relief valve piston assembly can now be withdrawn by carefully pulling down with a pair of pliers.
8. Insert tool L401 into the now exposed relief valve bore (taking care not to damage this) and withdraw the relief valve together with the dashpot sleeve.
   NOTE: Do not dismantle the dashpot and relief valve piston assemblies otherwise the predetermined spring pressures will be disturbed.

Refitting

9. Ensure that before assembly all the components are clean and lightly oiled.
10. Insert the relief body in the bore and, using the relief valve outer sleeve, push fully home.
    NOTE: The end with the 'O' ring is nearest to the outside of the casing.
11. Position the relief valve spring and piston assembly into the dashpot cup, ensuring that both ends of the residual pressure spring are correctly located.
12. Carefully position these components in the relief valve outer sleeve, at the same time engaging the relief valve piston in its housing.
13. Fit the base plug and tighten it flush with the casing to a torque loading of 16 lbf ft (2.2 kgf m).

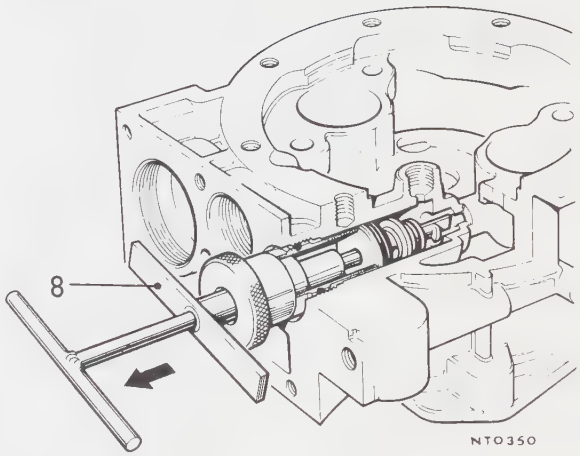

RELIEF VALVE AND DASHPOT ASSEMBLY

– Overhaul **40.16.07**

1. Remove the relief valve and dashpot assembly. 40.16.04.
2. Inspect the pistons and ensure that they move freely in their respective housings.
3. Inspect the 'O' rings and ensure that they are in good condition.
4. If they are damaged at all, the 'O' ring should be renewed.
5. Refit the relief valve and dashpot assembly. 40.16.04.

PUMP NON-RETURN VALVE

– Remove and refit **40.16.10**

Removing

1. Remove the overdrive sump.
2. Remove the suction filler.
3. With Churchill tool L354, remove the pump plug (centre plug) taking care not to lose the non-return valve spring and ball.
4. Remove the non-return valve seat.

Refitting

5. Place the spring in the non-return valve plug.
6. Position the ball on the spring.
7. Locate the non-return seat on the ball.
8. Screw the complete assembly into the maincase, using tool L354.
9. Screw up flush with the case to a torque loading of 16 lbf ft (2.2 kgf m).

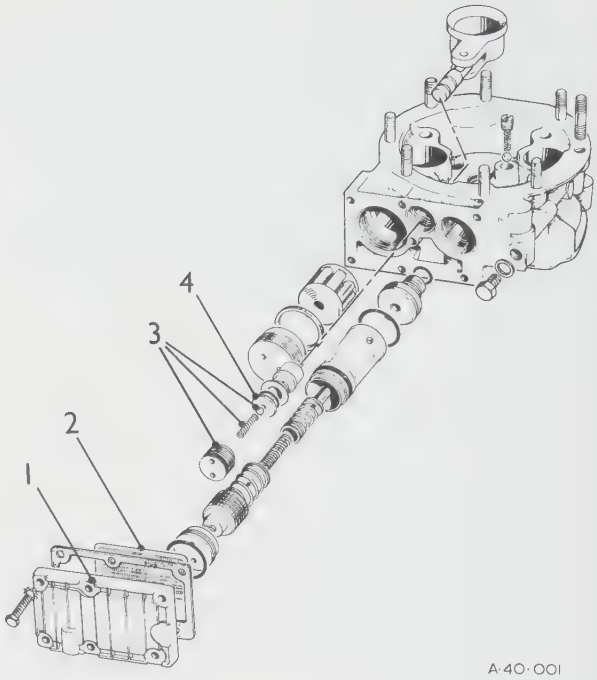

PUMP NON-RETURN VALVE

– Overhaul **40.16.14**

1. Remove the pump non-return valve. 40.16.10.
2. Carefully inspect the non-return valve ball and valve seat. If necessary, reseat the ball on the seat by tapping gently with a copper drift.
3. Ensure that the 'O' ring is undamaged.
4. If the 'O' ring is damaged, renew it.
5. Refit the 'O' ring after smearing with petroleum jelly.
6. Refit the pump non-return valve. 40.16.10.

CONTROL ORIFICE

– Clean **40.16.19**

The control orifice is situated in the angled drilling between the relief valve and the solenoid control valve.

1. To gain access, remove the solenoid control valve. 40.22.04.
2. Remove the relief valve and outer sleeve. 40.16.04.
3. Clean the orifice with a high pressure air-line.
   NOTE: Do not attempt to clean the orifice with wire or its calibration may be impaired.
4. Refit the relief valve and outer sleeve. 40.16.04.
5. Refit the solenoid control valve. 40.22.04.

OPERATING PISTONS

– Remove and refit **40.16.24**

Removing

1. Remove the gearbox and overdrive from the car. 37.20.01.
2. Remove the overdrive from the gearbox. 40.20.07.
3. Remove four nuts.
4. Remove two bridge pieces.
5. With a pair of pliers, remove the operating pistons, identifying them with their respective cylinders.

Refitting

6. Lightly oil the operating pistons.
7. Push the pistons into the housings.
8. Fit the two bridge pieces.
9. Fit and tighten the four new nuts to a torque of 6 to 8 lbf ft (0.8 to 1.1 kgf m).
10. Refit the overdrive to the gearbox. 40.20.07.
11. Refit the gearbox and overdrive to the car. 37.20.01.

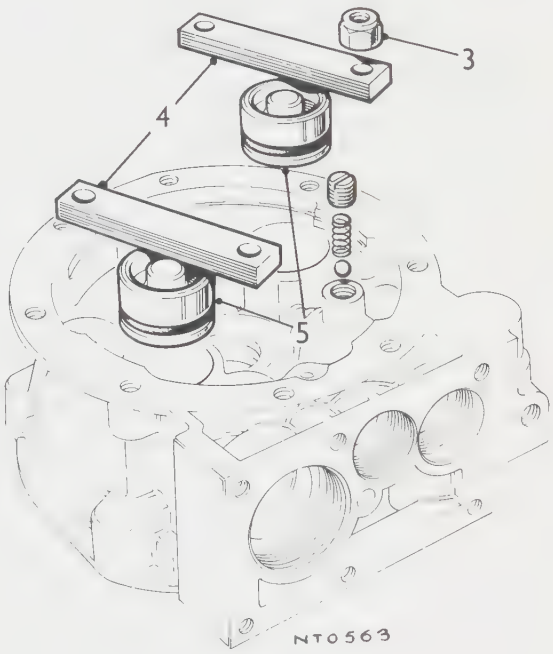

OPERATING PISTONS

– Overhaul **40.16.29**

1. Remove the operating pistons. 40.16.24.
2. Inspect each of the 'O' rings for any damage or wear.
3. If any damage is found the ring must be replaced and smeared with petroleum jelly.
4. Refit the operating pistons. 40.16.24.

OIL PUMP

– Remove and refit 40.18.01

Removing

1. Remove the overdrive from the car. 40.20.07.
2. Remove the sump and filter. 40.10.01.
3. Remove the pump plug, using tool L354A.
4. Remove the non-return valve spring.
5. Remove the steel ball.
6. Remove the non-return valve seat.
7. Work the pump body out of the main casing.
8. Remove the pump plunger assembly.

Refitting

9. Position the pump plunger assembly in the main case.
10. Fit the pump body in the main casing, ensuring that the flat on the body faces towards the pressure filter housing.
11. Fit the non-return valve seat.
12. Fit the steel ball.
13. Fit the non-return valve spring into the pump plug.
14. Fit the plug and tighten to a torque of 16 lbf ft (2.2 kgf m).
15. Clean the sump filter and replace.
16. Fit the sump with a new joint.
17. Tighten the sump bolts to a torque of 6 lbf ft (0.8 kgf m).
18. Refit the overdrive to the car. 40.20.07.

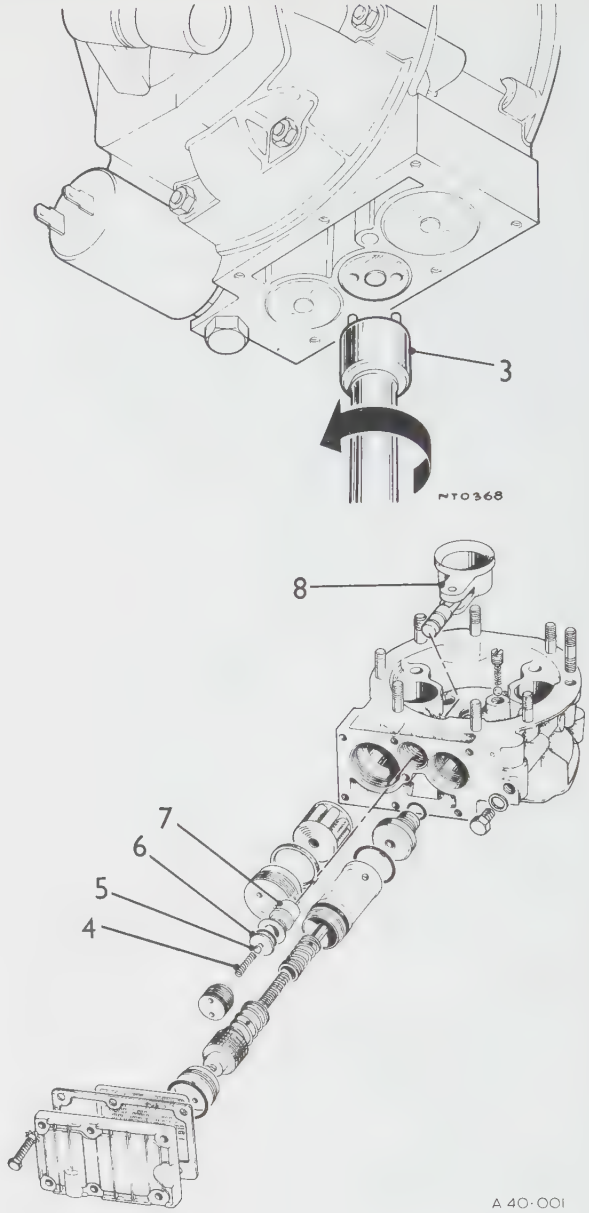

OIL PUMP

– Overhaul 40.18.04

1. Remove the pump plunger assembly. 40.18.01.
2. Check that the strap is a good fit on the mainshaft cam.
3. Check that there is no excess play between the strap and the plunger.
4. If the pump plunger assembly is worn or damaged, this must be replaced as a complete assembly.
5. Check that the 'O' rings on the pump body and the plug are perfect, if not, these must be replaced.
6. Refit the pump plunger assembly. 40.18.01.

OVERDRIVE ASSEMBLY

– Hydraulic pressure test 40.20.01

1. Check that the oil level in the gearbox is correct.
2. Remove the plug adjacent to the solenoid and fit a hydraulic pressure gauge (special tool L188) together with adaptor (L188–2).
3. Jack the car up and run the transmission at approximately 25 m.p.h. (40 km/h).
4. In direct drive the residual pressure should register on the gauge to approximately 20 lbf/in^2 (2.8 kgf/cm^2).
5. Engage the overdrive, a pressure of 375 to 400 lb/in^2 (52.5 to 56.0 kgf/cm^2) should be recorded.
6. Disengage the overdrive and the gauge should return to show the residual pressure.

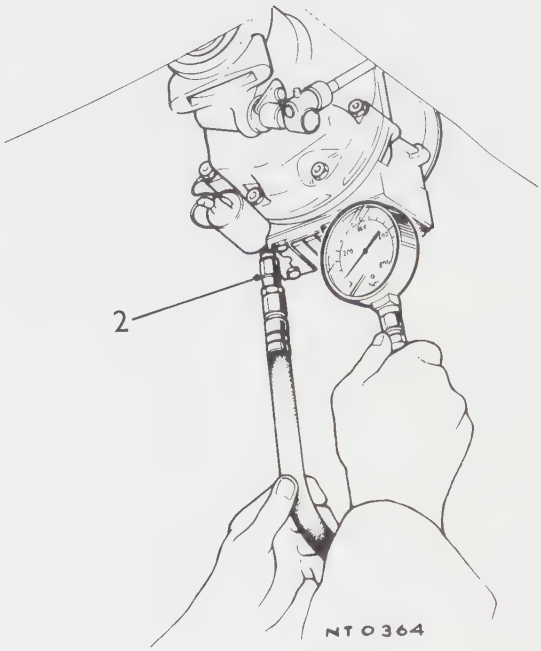

OVERDRIVE ASSEMBLY

– Remove and refit 40.20.07

Removing

NOTE: Before commencing overdrive removal it is advisable to raise the rear wheels and run the transmission. Engage the overdrive, then disengage with the clutch depressed leaving the overdrive ready for removal. This will release the spline loading between the planet carrier and the uni-directional roller clutch which could make removal difficult.

1. Drive the vehicle onto the ramp and disconnect the battery.
2. Slacken the nuts and bolts securing the radiator to the valances and chassis.
3. Remove the gearbox cover. 76.25.07.
4. Disconnect the electrical harness leads for the reversing lights, overdrive (and seat belt warning system).
5. Remove the four bolts securing the top cover plate and gasket to the top cover, remove the plate.
6. Remove the remote control selector rail wedgelock bolt.
7. Remove the bolts and spring washers securing the remote control rear support bracket to the overdrive.
8. Withdraw the remote control selector rail.
9. Disconnect the speedometer cable from the gearbox.
10. Remove the four nuts and bolts securing the propeller shaft to the gearbox drive flange.
11. Raise the vehicle.
12. Remove the three nuts and washers securing the exhaust down pipe to the manifold flange.
13. Disconnect the engine restraint cable from the bell housing.
14. Disconnect the exhaust pipe from the gearbox bracket.
15. Remove the nuts and bolts securing the gearbox mounting to the chassis.
16. Drain the oil from the gearbox.
17. Position a ramp jack under the gearbox casing and carefully raise the jack.

CAUTION: Care must be taken not to damage the radiator with the fan.

18. Remove the two bolts and spring washers, securing the gearbox mounting to the overdrive.
19. Remove the eight nuts and spring washers securing the overdrive to the gearbox adaptor plate.
20. Carefully remove the overdrive unit over the mainshaft leaving the adaptor plate in position on the gearbox.

If difficulty is experienced in separating the overdrive from the gearbox, use the following procedure:
Remove the hexagon plug adjacent to the solenoid, and screw in and tighten to L 402. Energize the solenoid, then pressurize the unit by pumping clean oil through the nipple on the tool with a lubrication gun. This will release the spline loading on the mainshaft and permit easy removal. De-energise the solenoid when the overdrive has separated by ¾ in (19 mm).

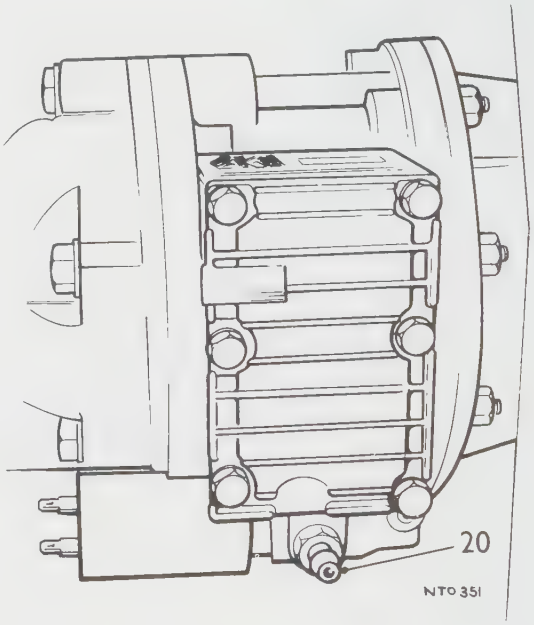

Refitting

21. Using a screwdriver of suitable length, rotate the inner member of the uni-directional roller clutch (this is the innermost set of splines), in an anti-clockwise direction until the splines of this member align with the splines in the planet carrier.
22. Ensure that the pump cam and the sun gear spring ring are correctly located on the mainshaft.
23. Rotate the gearbox mainshaft so that the peak of the pump cam is at the bottom, so as to assist engagement with the pump.
24. Fit a new joint to the front face of the overdrive.
25. Offer up the overdrive to the gearbox.
26. Rotate the output shaft of the unit in a clockwise direction.
27. At the same time apply slight pressure until the splines are engaged.
28. Ensure that the pump strap assembly rides smoothly onto the cam and that the overdrive pushes home to the adaptor face without excessive force.
29. Fit and tighten the eight nuts which secure the unit.
30. If the overdrive fails to meet the adaptor plate face by approximately ⅝ in (16 mm) it means that the planet carrier and the uni-directional roller splines have become mis-aligned. In this case remove the unit and re-align the splines.
31. Fit the gearbox rear mounting to the overdrive.
32. Raise the ramp.
33. Lower the ramp jack to position the gearbox, ensuring that the prop shaft is aligned correctly.
34. Secure the gearbox mounting to the chassis.
35. Fit a new exhaust down pipe gasket and secure the downpipe to the manifold.
36. Refit the exhaust clamp to the gearbox.
37. Refit the engine restraint cable to the gearbox bell housing and tighten, adjust other end to remove all slack without straining the cable.
38. Lower the ramp.
39. Refit the remote control selector rail and secure the rear support bracket to the overdrive.
40. Fit the remote control selector rail wedgelock bolt.
41. Fit a new top cover plate gasket, refit the top cover plate and secure with four bolts and spring washers.
42. Reconnect the propeller shaft to the gearbox drive flange, secure using four bolts and nyloc nuts.
43. Refit the speedometer cable to the gearbox.
44. Refit the electrical harness leads for the reversing lights, overdrive (and seat belt warning system).
45. Fill the gearbox to the correct level with a recommended lubricant.
46. Refit the gearbox cover. 76.25.07.
47. Tighten the radiator mounting bolts.
48. Reconnect the battery.

OVERDRIVE ASSEMBLY

– Overhaul or dismantle **40.20.10**

1. Remove the overdrive from the car. 40.20.07.
2. Before starting to dismantle the overdrive assembly, the exterior of the casings must be thoroughly cleaned.
3. Mount the unit vertically in a vice with the use of 'soft' jaws.
4. Remove the four nuts securing the bridge pieces.
5. Remove the bridge pieces.
6. Progressively release the six nuts around the main casing to release the clutch return spring pressure.
7. Note the position of the two copper washers which fit on the two studs at the top of the casing.
8. Remove all the washers from the casing.
9. Separate the main casing complete with the brake ring from the rear case.
10. Lift out the sliding member assembly complete with the sun wheel.
11. Lift out the planet carrier assembly, taking care not to damage the oil catcher which is attached to the underside of the carrier.
12. Tap the brake ring from its spigot in the main casing with a suitable drift.
13. Using a pair of pliers, withdraw the operating pistons.
14. Remove the sump and suction filter. 40.10.01.
15. Remove the relief valve assembly. 40.16.04.
16. Remove the pump non-return valve assembly. 40.16.10.
17. Remove the oil pump assembly. 40.18.01.
18. Remove the pressure filter. 40.10.08.
19. Remove the solenoid control valve. 40.22.09.
20. Inspect the main casing for cracks.
21. Examine the operating cylinder bores for scores or wear.
22. Check the operating pistons for wear.
23. Replace the sealing rings if there is any sign of damage.
24. Remove the circlip from the sun wheel extension.
25. Take out the sun wheel.
26. Remove the circlip from its groove on the cone clutch hub.
27. Tap out the clutch from the thrust ring bearing, using a hide mallet.
28. Extract the large circlip.
29. Press the bearing from its housing.
30. Examine the clutch linings on the sliding member for any signs of excessive wear or charring.
31. If there is any sign of this condition, the sliding member complete must be replaced.
    NOTE: It is not possible to fit new linings as these are precision machined after they are bonded.

continued

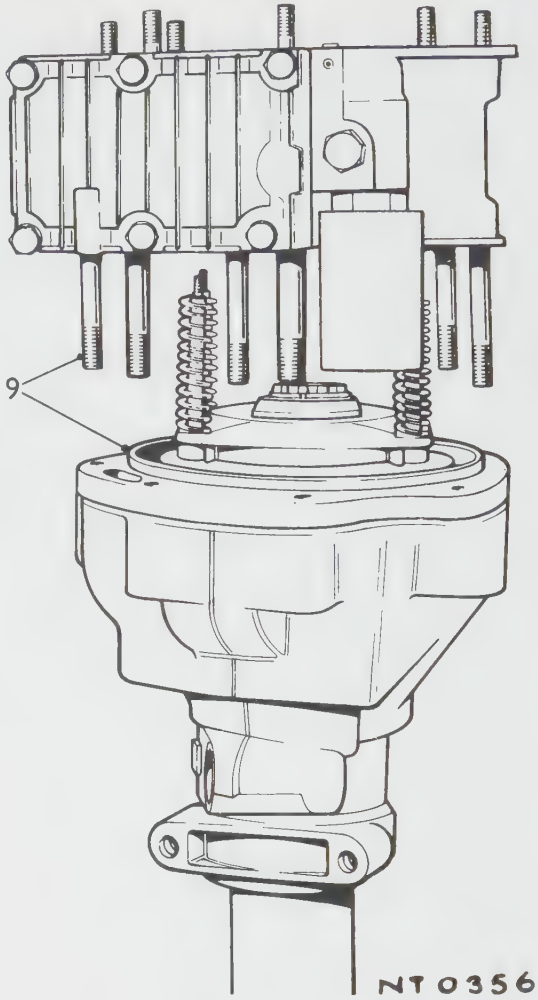

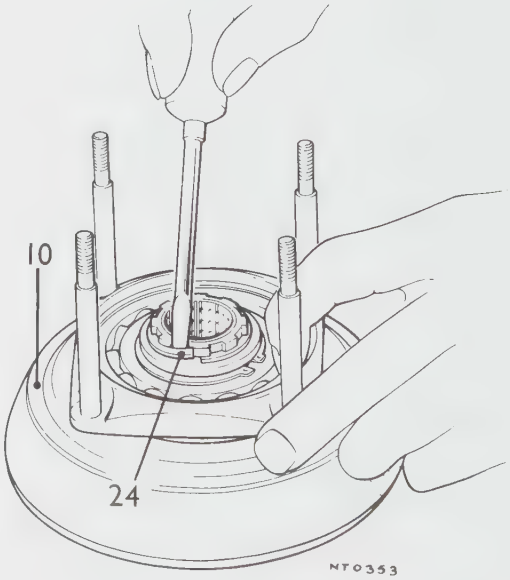

32. Check the ball race and ensure that it rotates smoothly as this can be a source of noise when running in direct drive.
33. Examine the clutch return springs for any signs of distortion or collapse.
34. Inspect the sun wheel teeth for wear or damage.
35. Inspect the planet gears for damage or wear.
36. Check the planet gear bearings for any excessive clearance.
37. Examine the oil thrower for damage.
38. Using a screwdriver blade, remove the circlip.
39. Lift out the oil thrower.
40. Place tool L178 over the exposed uni-directional roller clutch.
41. Lift the inner member complete with rollers into the special tool.
42. Remove the bronze thrust washer.
43. Remove the speedometer drive bolt.
44. Remove the speedometer driven gear clamp.
45. Pull the speedometer driven gear out with a pair of pliers, this will also remove the speedometer bush.

continued

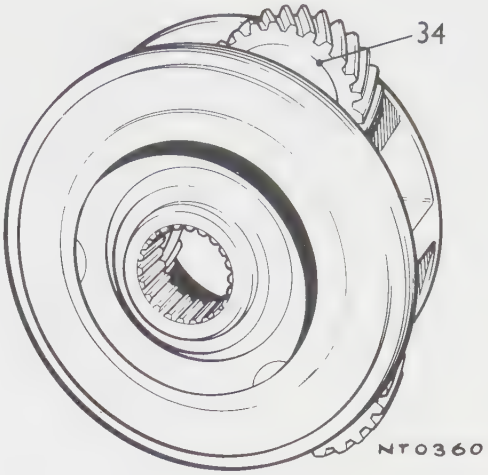

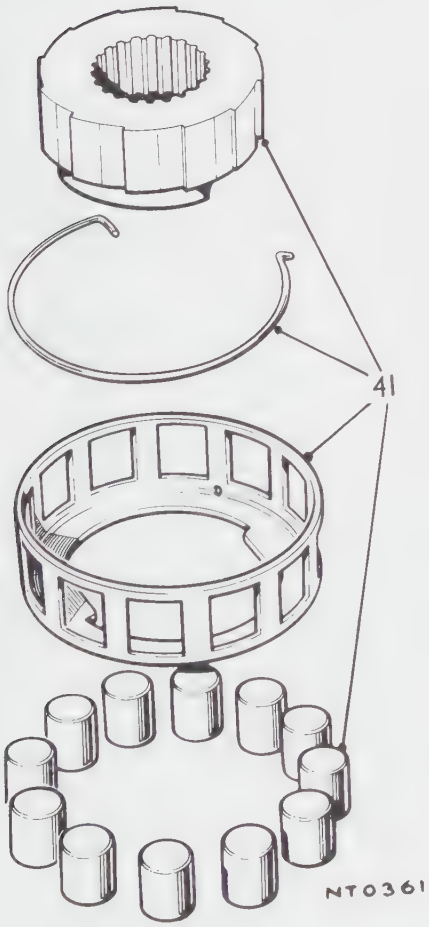

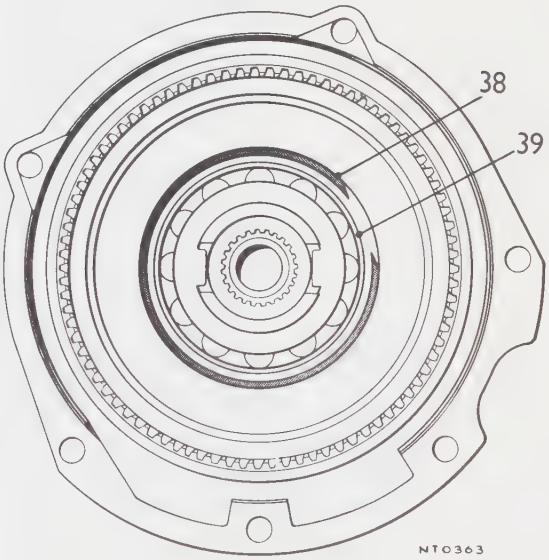

46. Separate the bush from the driven gear.
47. Remove the coupling flange nut and washer.
48. Withdraw the flange, using a suitable extractor.
49. Drift out the annulus, using a hide mallet applied to the end of the tail shaft.
50. The front bearing, speedometer drive gear and spacer will be withdrawn together with the annulus.
51. Remove the oil seal.
52. Drive out the rear bearing.
53. Check, and renew if necessary, all the 'O' rings.
54. Inspect the teeth and the cone surface of the annulus for wear.
55. Check that the uni-directional clutch rollers are not chipped.
56. Check that the inner and outer members are not damaged.
57. Examine the spring and cage for distortion.
58. The oil seal must be replaced.
59. Examine the speedometer drive and driven gears for wear and chafing, in either case they must be replaced.
60. Position the speedometer drive gear in the rear casing with its plain boss facing the front bearing.

NOTE: The speedometer drive gear cannot be fitted from the rear of the casing.

continued

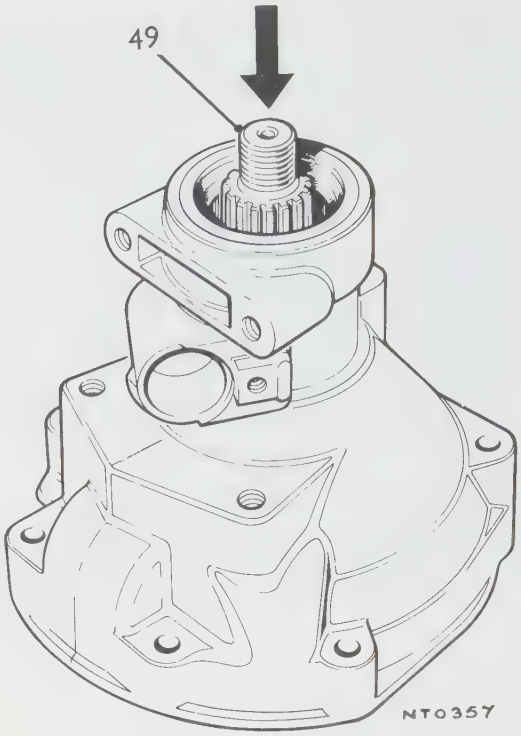

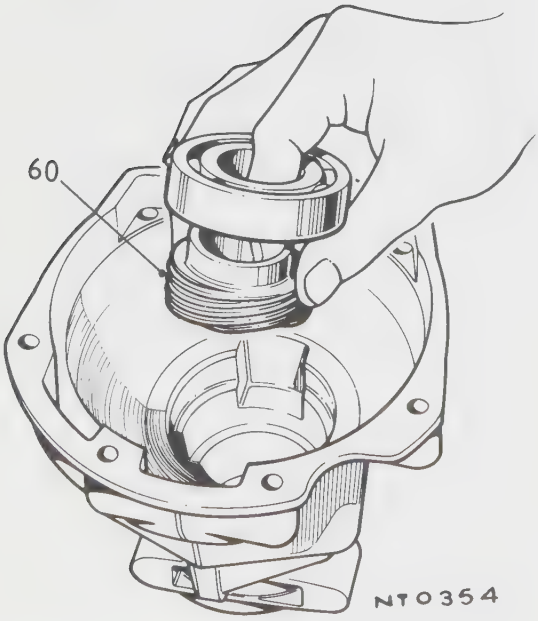

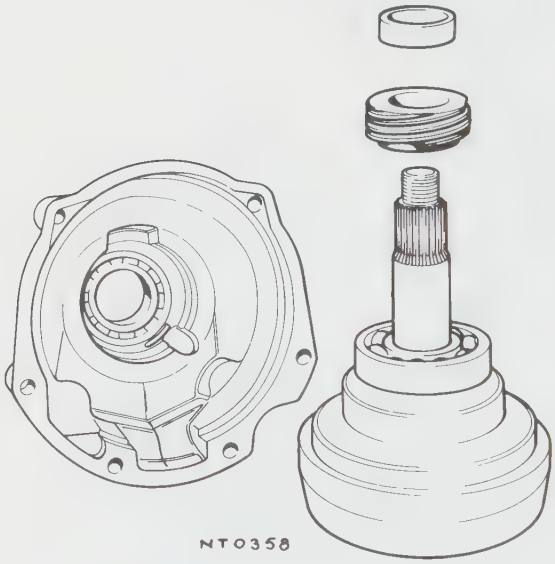

61. Press the front bearing into the rear casing.
62. Ensure that its outer track abuts against the shoulder in the casing.
63. Position the annulus with the inner face resting on a suitable packing piece.
64. Using tool L186, press the front bearing together with the rear casing and speedometer driving gear onto the annulus until the bearing abuts on the locating shoulder.
65. Fit the spacer onto the annulus.
66. Using tool L186, press the rear bearing onto the annulus and into the rear casing simultaneously.
67. Fit the oil seal, using tool L177 with 550.
68. Press on the coupling flange.
69. Fit the washer.
70. Tighten up the self-locking nut to a torque loading of 80 to 130 lbf ft (11.1 to 18.0 kgf m).
71. Position the spring and inner member of the uni-directional roller clutch into the cage.
72. Locate the spring so that the cage is spring loaded in an anti-clockwise direction when viewed from the front.
73. Place the assembly into tool L178, with the open side of the cage uppermost.
74. Move the clutch in a clockwise direction until all the rollers are in place.
75. Refit the bronze thrust washer in the recess in the annulus.
76. Transfer the uni-directional clutch assembly from the special assembly tool into its outer member up the annulus.
77. Position the oil thrower.
78. Secure with the circlip.
79. Check that the clutch rotates in an anti-clockwise direction only.

continued

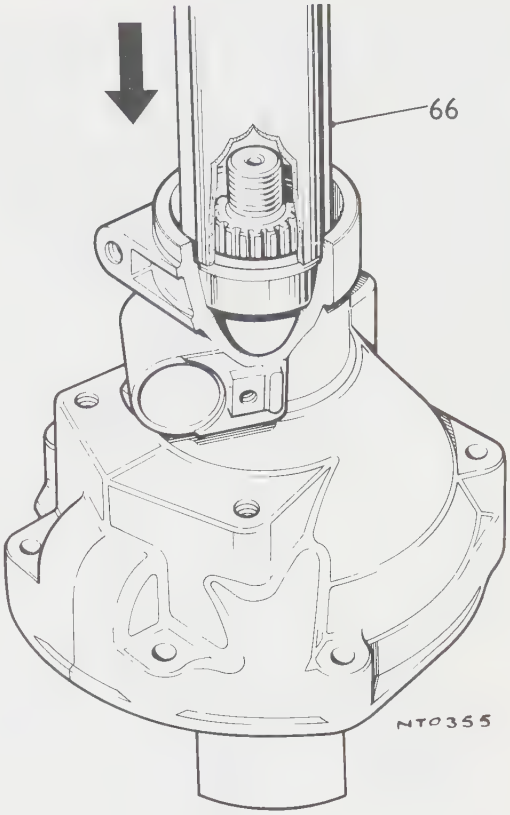

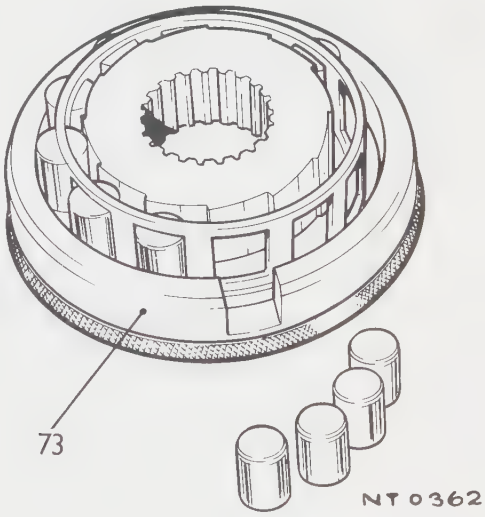

80. Fit the ball race into its housing.
81. Secure the ball race with the large circlip.
82. Position this assembly onto the hub of the cone clutch.
83. Secure with a circlip.
84. Ensure that the circlip locates properly in the groove.
85. Insert the sun wheel into the hub.
86. Fit the circlip on the sun wheel extension.
87. Lightly smear the operating pistons with oil.
88. Fit the pistons into their respective housings.
89. Refit the solenoid control valve. 40.22.09.
90. Refit the pressure filter. 40.10.08.
91. Refit the oil pump assembly. 40.18.01.
92. Refit the pump non-return valve assembly. 40.16.10.
93. Refit the relief valve assembly. 40.16.04.

continued

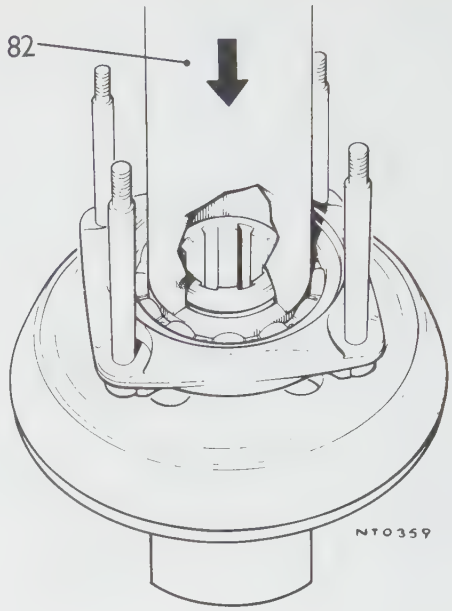

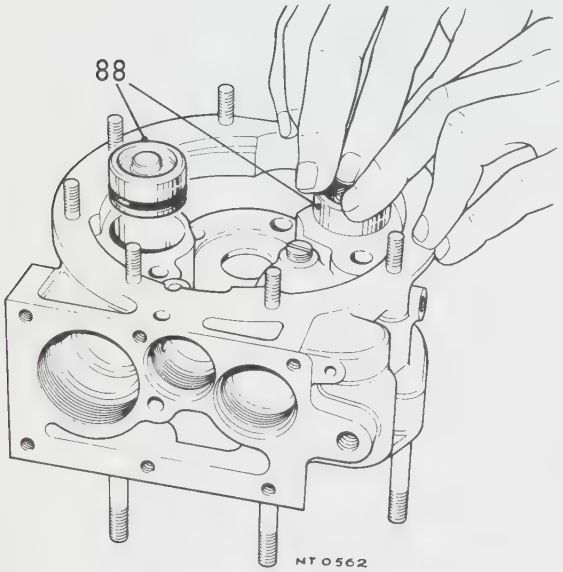

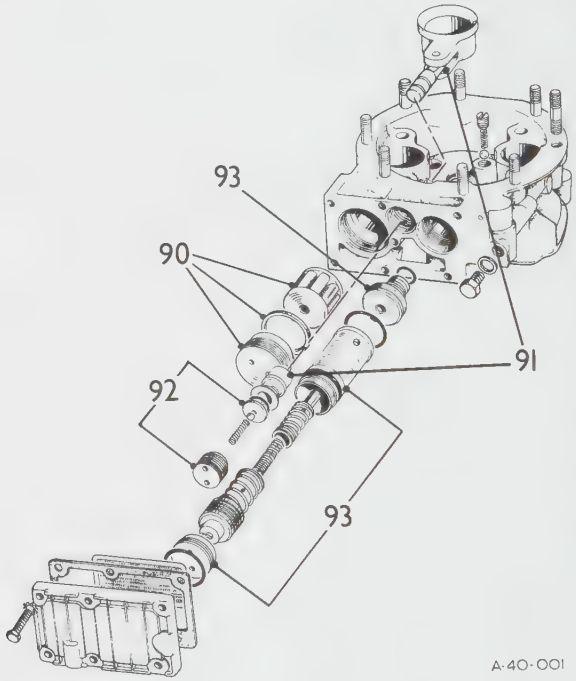

94. Refit the sump and suction filter. 40.10.01.
95. Mount the rear casing assembly vertically in a vice.
96. Insert the planet carrier assembly.
    NOTE: The gears can be meshed in any position.
97. Place the sliding member assembly complete with the clutch return springs onto the cone of the annulus.
98. Engage the sun wheel with the planet gears.
99. Apply Wellseal to new gaskets either side of the brake ring.
    NOTE: These gaskets are different.
100. Fit the brake ring onto its spigot in the tail casing, aligning the stud holes.
101. Position the main casing assembly over the thrust housing pins, at the same time entering the studs in the brake ring.
102. Fit and progressively tighten the six nuts securing the rear and main case assemblies to a torque setting of 13 to 15 lbf ft (1.8 to 2.1 kgf m).
103. Apply Wellseal to the two copper washers and threads of the two top studs.
104. Secure the earth lead to the stud above the solenoid aperture.
105. The clutch return spring pressure will be felt as the two casings go together.
106. Fit the two bridge pieces.
107. Secure with four new self-locking nuts to a torque setting of 6 to 8 lbf ft (0.8 to 1.1 kgf m).

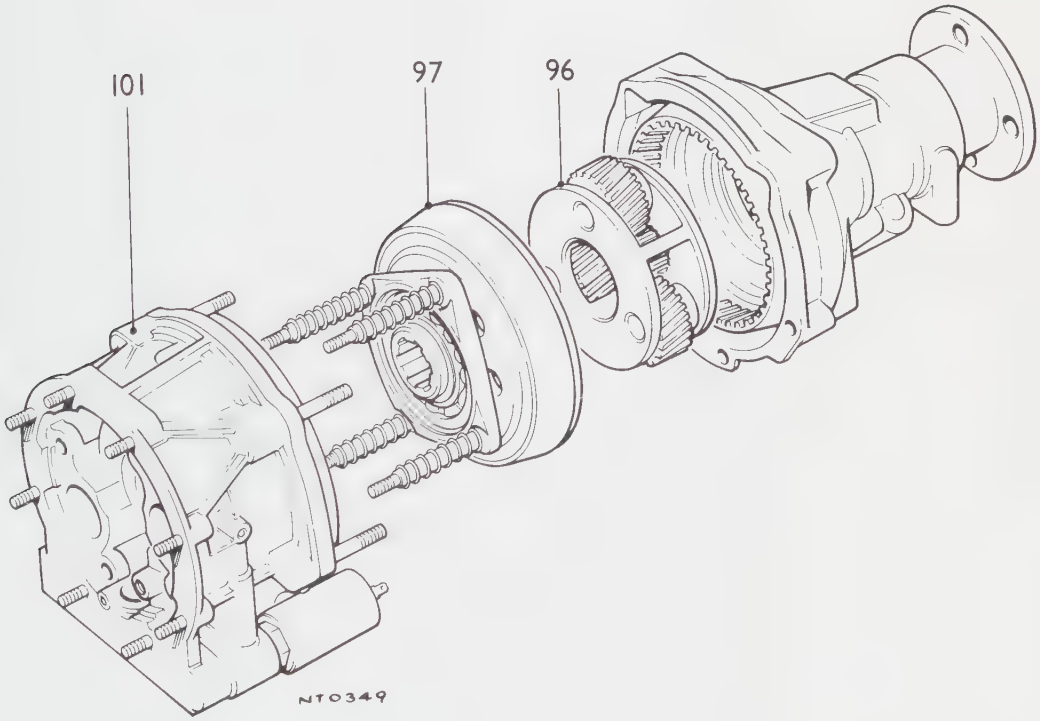

SOLENOID

– Test **40.22.01**

1. Connect the solenoid in series with a 12-volt battery and ammeter.
2. The solenoid should draw approximately 2 amps.
3. Check that the plunger in the valve moves forward when the solenoid is energized.
4. Check that the plunger in the valve returns to its direct drive position by spring pressure when the solenoid is de-energized.
   NOTE: The solenoid does not operate with a loud click as the other types of overdrive.
5. If the solenoid is still faulty, the complete unit must be renewed.

SOLENOID OPERATING VALVE

– Remove and refit **40.22.04**

Removing

1. Disconnect the negative battery lead.
2. Disconnect the two Lucar connectors from the solenoid.
3. Using a 1 in (25 mm) A.F. open-ended spanner on the hexagon, loosen and unscrew the solenoid.
   NOTE: Do not attempt to remove the solenoid by gripping the cylindrical body as this is very easily damaged.

Refitting

4. Screw the solenoid into the casing.
5. Tighten with a spanner.
6. Connect Lucar connectors to the terminals, these can be connected either way round.
7. Connect the negative lead of the battery.

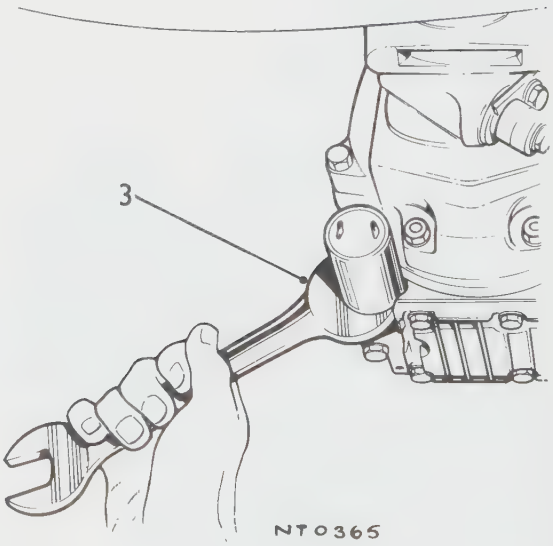

SOLENOID OPERATING VALVE

– Overhaul 40.22.13

1. Remove the solenoid and operating valve. 40.22.04.
2. Should it be necessary to clean the operating valve, immerse this part of the solenoid valve in paraffin until the valve is clean.
3. Examine the 'O' rings on the solenoid valve for damage, and renew together with a sealing washer if necessary.
4. Fit the solenoid and operating valve. 40.22.04.

SPEEDO DRIVE GEAR

– Remove and refit 40.25.01

Removing

1. Working from under the car, remove the locking plate screw.
2. Remove the drive pinion and holder.

Refitting

3. Refit the drive gear, ensuring that the drive gear meshes with the driven gear.
4. Refit the locking plate and screw.
5. Top up any oil lost.

PROPELLER AND DRIVE SHAFT OPERATIONS

Propeller shaft – remove and refit 47.15.01

Rear drive shaft – remove and refit 47.10.01

Rear drive shaft and hub bearings – remove and refit 47.10.18

Rear drive shaft trunnion bushes – remove and refit 47.10.19

Universal joint – overhaul 47.15.18

REAR DRIVE SHAFT

– Remove and refit **47.10.01**

Rear drive shaft and hub bearings – remove and refit **47.10.18**

Special tools S109C or S356A, S4221A, S4221A-14, S300A, S304

Removing

1. Jack up the rear of the car, support it on chassis stands and remove the road wheel.
2. Disconnect the flexible brake hose from the chassis bracket and pipe union and wheel cylinder.
3. Disconnect the hand brake cable from the brake back plate lever and release the return spring.
4. Using a jack under the vertical link to relieve the damper load, remove the bolt securing the radius arm to the vertical link bracket. 64.35.28.

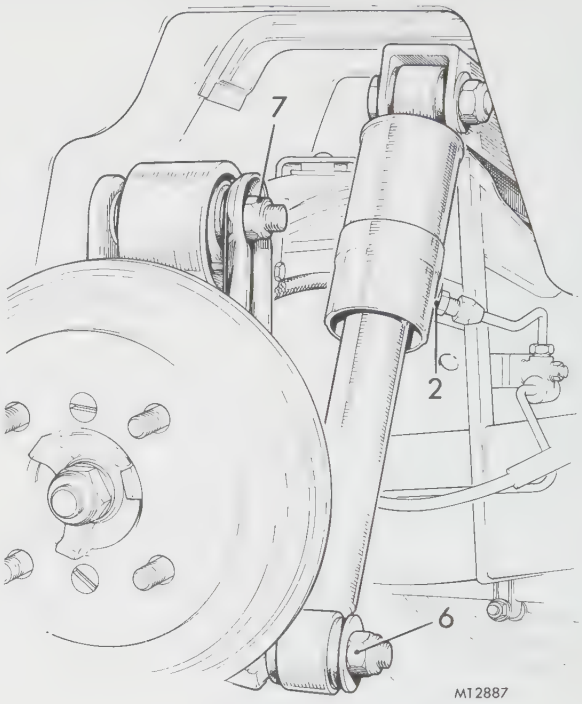

5. Remove the four bolts and Nyloc nuts securing the drive shaft universal joint to the inner drive shaft flange.
6. Remove the Nyloc nut and washer securing the damper lower attachment to the vertical link and pull the damper clear of its mounting pin.
7. Remove the jack from beneath the vertical link and whilst supporting the brake drum by hand, remove the nut and bolt securing the road spring to the vertical link.
8. Withdraw the drive shaft from the chassis together with the brake, hub and vertical link assembly.

[**NOTE:** In order to overhaul the universal joint that is at the inner end of the rear drive shaft, follow the procedure described for propeller shaft universal joints 47.15.18.]

[CAUTION: Please read the instructions thoroughly before you attempt universal joint or wheel bearing repairs. If you lack the necessary skills or tools we suggest you leave this work to an Authorized Dealer or other qualified shop. Before taking a removed driveshaft in for repair, thoroughly clean its exterior but do not undertake any disassembly.]

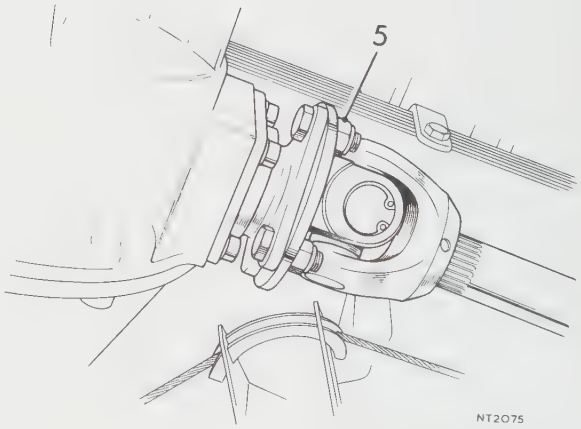

9. Hold the assembly in a vice and remove the brake drum and the hub nut.
10. Using special tool S109C or S356A withdraw the hub and key.
11. Remove the Nyloc nut and withdraw the bolt securing the trunnion to the vertical link assembly and separate the trunnion from the vertical link.
12. Bend back the lock tabs and remove the four bolts securing the grease trap and brake back plate to the hub bearing housing and remove:
    a. The grease trap.
    b. The back plate.
    c. The seal housing complete with seal.
    d. The joint washer.
13. Using special tool S4221A with adaptor S4221A-14, press the drive shaft from the hub bearing housing. The flinger may be left in position if it is not damaged and is a satisfactory tight fit on the shaft.
14. From the hub bearing housing press or drift out the inner oil seal and needle roller bearing.

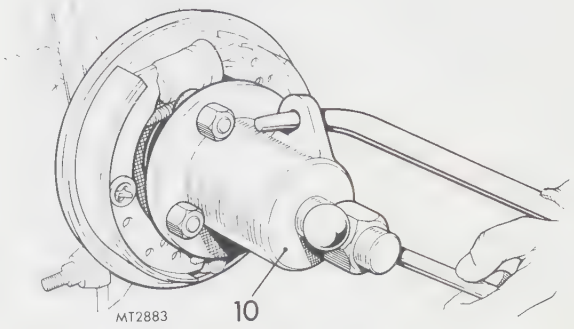

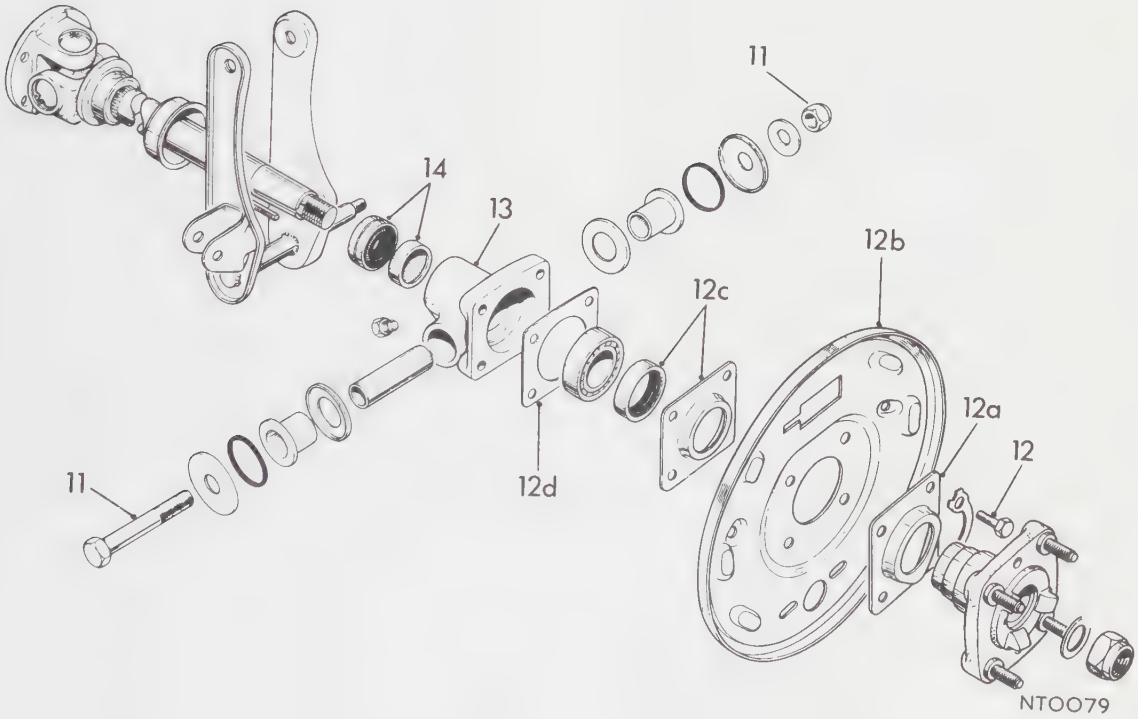

Refitting

15. Press the needle roller bearing (lettered end trailing) into the hub bearing housing to a depth of 0.5 in (12.7 mm) from the housing face using special tool No. S300A.
16. Drift the inner oil seal into the housing with the sealing lips trailing.

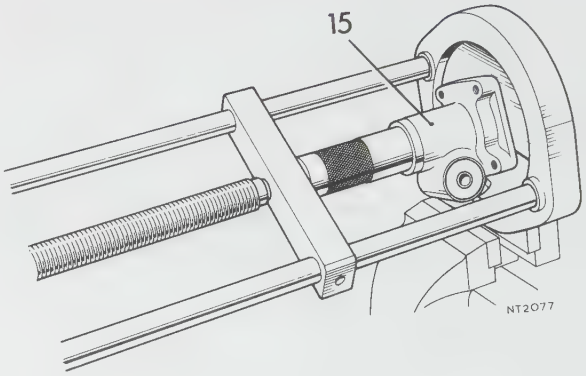

17. If previously removed, drive the flinger on to the axle shaft with a suitable tool to a position 5.740 to 5.760 in (145.8 to 146.3 mm) from the end of the shaft indicated by dimension A.
18. Pack the needle rollers with grease and fit the housing to the axle shaft taking care not to damage the oil seal and needle rollers.

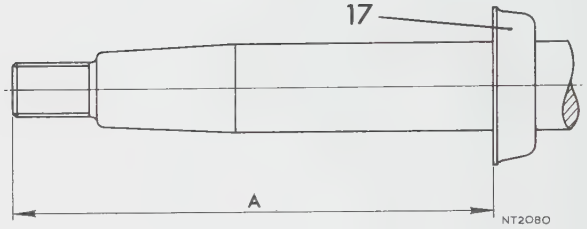

19. Hold the axle shaft in the soft jaws of a vice, pack the bearing housing and ball race with grease and drift the ball race on to the shaft, using special tool No. S304.

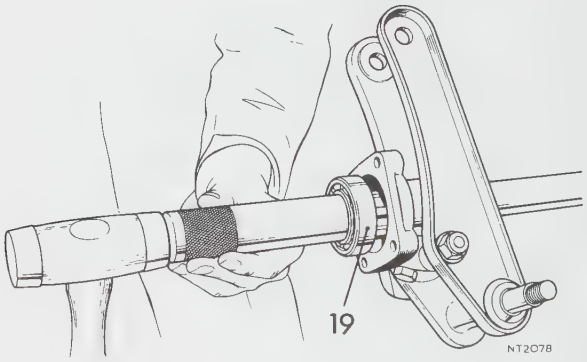

20. Press the outer oil seal into the seal housing with the sealing lip trailing i.e. lip facing towards the bearing.
21. Smear a new paper joint with grease and place it in position on the bearing housing face.
22. Assemble the seal housing together with the brake back plate and grease trap and secure to the bearing housing with new lock plates and the four bolts. Ensure that the following is observed:
    a. The back plate is fitted with the wheel cylinder at the top.
    b. The grease trap is fitted with the duct at the bottom.
23. Insert the key into the key-way and check that the taper on the axle shaft and in the hub is clean and free from burrs. Fit the hub and secure with a plain washer and a new Nyloc nut and tighten to 90 to 120 lbf ft (12.4 to 16.6 kgf m).
24. Offer up the vertical link and secure it to the trunnion and drive shaft assembly with the special bolt and a new Nyloc nut tightening to 38 to 48 lbf ft (5.2 to 6.6 kgf m). (Nut to the rear.)
25. Fit the vertical link and drive shaft assembly to the road spring eye leaving the securing Nyloc nut and bolt slack at this stage (nut to the rear).
26. Jack up the assembly under the vertical link and secure the damper to its lower attachment pin with a new Nyloc nut and tighten to 28 to 38 lbf ft (3.9 to 5.2 kgf m).
27. Attach the radius arm to the vertical link and tighten to 24 to 32 lbf ft (3.3 to 4.4 kgf m). 64.35.28.
28. Fit the axle shaft universal coupling to the final drive inner axle shaft flange and secure with bolts and new Nyloc nuts. Remove the supporting jack.
29. Fit the handbrake cable to the brake back plate lever and reconnect the return spring.
30. Fit the brake drum and reconnect the flexible hose to the chassis bracket and pipe union and to the wheel cylinder.
31. Bleed the hydraulic brake system. 70.25.02.
32. Fit the road wheel and remove the car from the chassis stand.
33. Roll the car to settle the suspension and finally tighten the spring eye bolt to 38 to 48 lbf ft (5.2 to 6.6 kgf m).

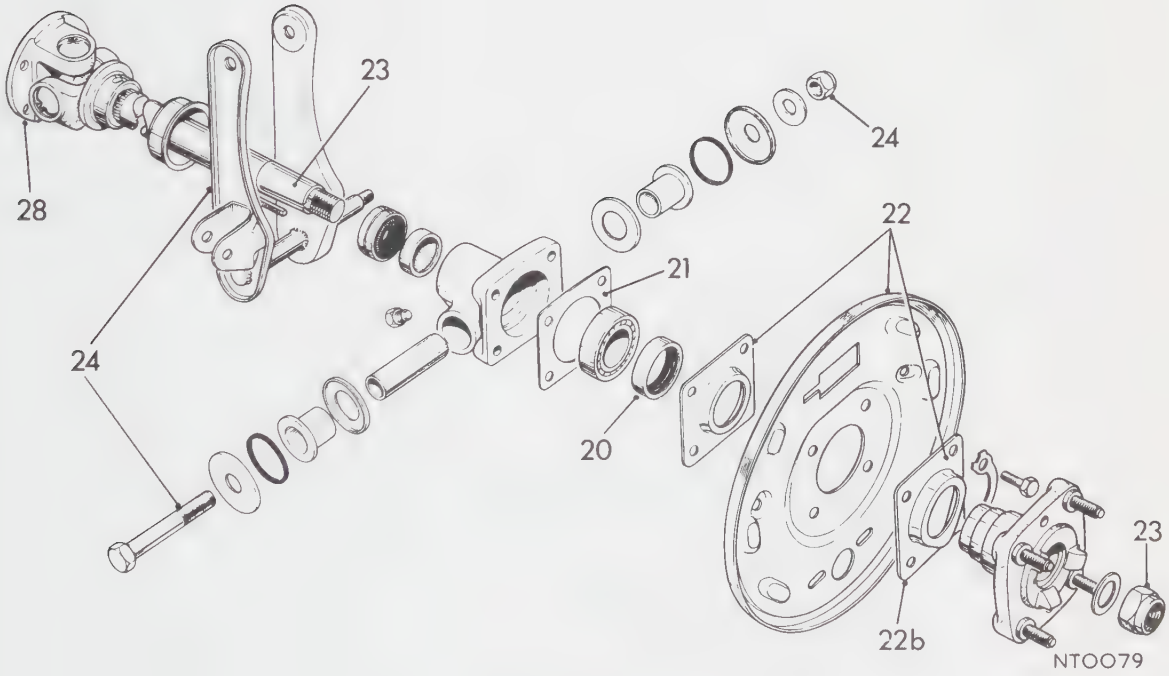

47.10.01 Sheet 4
47.10.18 Sheet 4

REAR DRIVE SHAFT TRUNNION BUSHES

– Remove and refit **47.10.19**

Removing

1. Jack up the rear of the car and remove the road wheel.
2. Jack up under the vertical link to relieve the damper load and disconnect the damper from its lower attachment.
3. Disconnect the radius rod from the vertical link.
4. Lower the jack under the vertical link.
5. Remove the special trunnion nut and bolt.
6. Push the vertical link assembly towards the final drive unit to expose the trunnion and remove the following:
   a. two outer shims
   b. two rubber seals
   c. one distance tube
   d. two Nylon bushes
   e. two inner shims

Refitting

7. Assemble the components to the trunnion in the following order:
   a. Fit the two inner shims (smaller diameter)
   b. Press in the two nylon bushes.
   c. Fill the space between the two nylon bushes with grease
   d. Fit the rubber seals
   e. Fit the distance tube
   f. Fit the outer shims (larger diameter)
8. Pull the vertical link assembly back into its correct position and secure the trunnion assembly to the vertical link with the special bolt and Nyloc nut.
9. Jack up under the vertical link and reconnect the damper to its lower attachment pin on the vertical link.
10. Reconnect the radius rod to the vertical link and lower the jack under the vertical link.
11. Refit the road wheel and lower the jack.
12. Remove the lubrication plug and grease the hub – see Maintenance section.

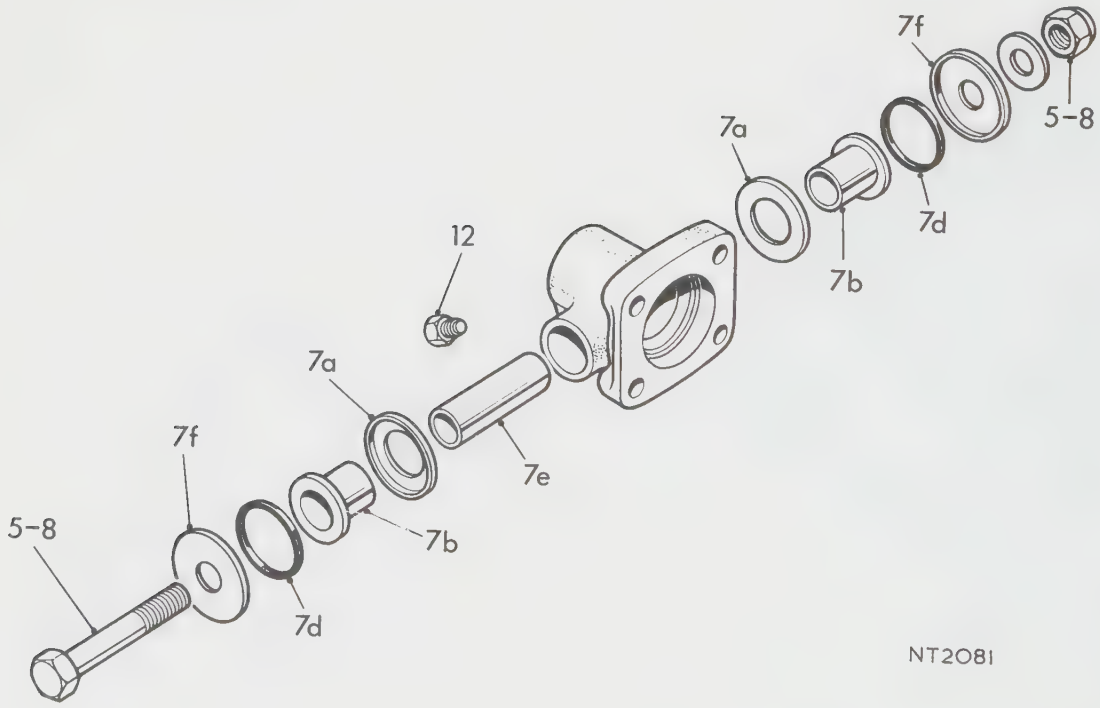

PROPELLER SHAFT

– Remove and refit 47.15.01

Removing

1. Place the car on a ramp or over a pit.
2. Remove the exhaust system, 30.10.01 excluding the front pipe.
3. Working beneath the car, mark for reassembly the relationship of the gearbox driving flange to the universal joint flange and remove the four securing nuts and bolts:
4. Mark for reassembly as in instruction 3 and remove the four nuts and bolts securing the rear end of the propeller shaft to the final drive flange and remove the propeller shaft from the car
   NOTE: Strap or frictionless type propeller shafts may be fitted as standard alternatives.

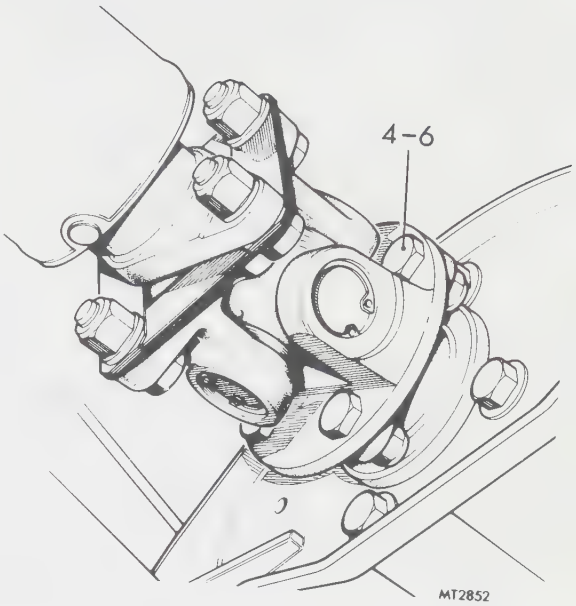

Refitting

5. Offer up the propeller shaft to the gearbox flange so that the bolt holes line up and the identification marks coincide. Fit the bolts with new nyloc nuts and tighten as in instruction 6.
6. Offer up the propeller shaft to the final drive flange so that the identification marks line up and secure in position using new nyloc nuts. Tighten the nuts and bolts to 26 to 34 lbf ft (3.6 to 4.7 kgf m).
7. Replace the exhaust system.

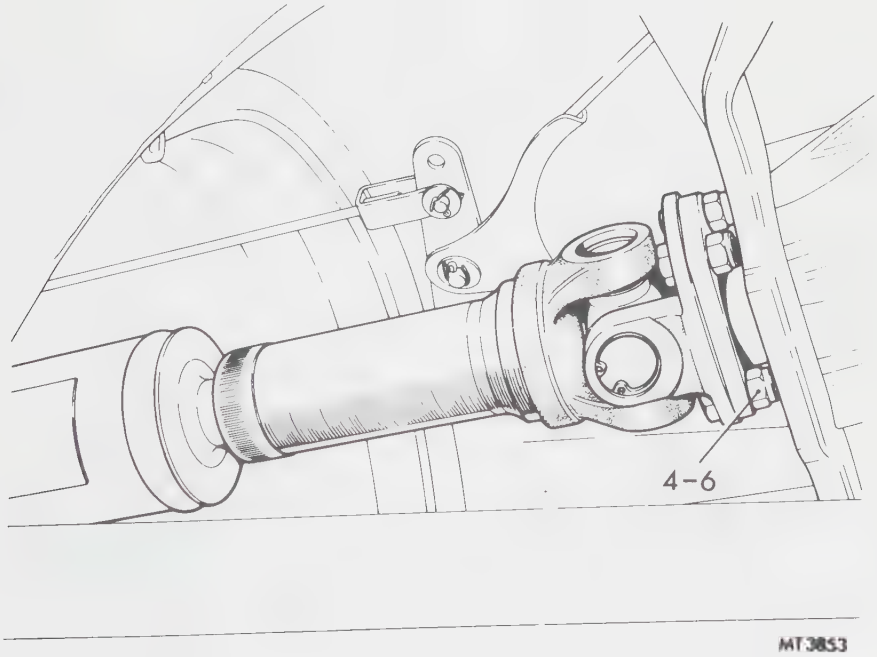

UNIVERSAL JOINT

– Overhaul 47.15.18

[CAUTION: Please read the instructions thoroughly before you attempt universal joint repairs. If you lack the necessary skills or tools we suggest you leave this work to an Authorized Dealer or other qualified shop. Before taking a removed shaft and joint in for repair, thoroughly clean its exterior but do not undertake any disassembly.]

Dismantling

1. Remove the propeller shaft. 47.15.01.
2. Remove the paint, rust etc. from the vicinity of the bearing cups and circlips.
3. Remove the circlips.
4. Tap the yokes to eject the bearing cups.
5. Withdraw the bearing cups and spider.

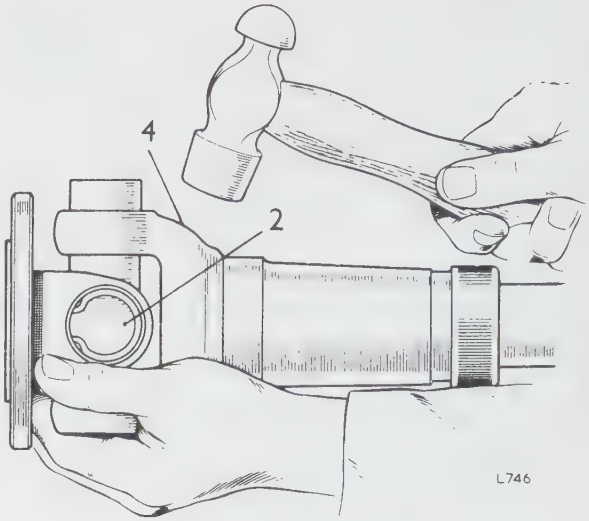

Reassembling

6. Remove the bearing cups from the new spider.
7. Ensure that the cups contain approved lubricant (one third full) and that the needle bearings are complete and in position.
8. Fit the spider to the propeller shaft yoke.
9. Engage the spider trunnion in the bearing cup and insert the cup into the yoke.
10. Fit the opposite bearing cup to the yoke and carefully press both cups into position, ensuring that the spider trunnion engages the cups and that the needle bearings are not displaced.
11. Using two flat faced adaptors of slightly smaller diameter than the bearing cups press the cups into the yokes until they reach the lower land of the circlip grooves. Do not press the bearing cups below this point or damage may be caused to the cups and seals.
12. Fit the circlips.
13. Refit the propeller shaft. 47.15.01.

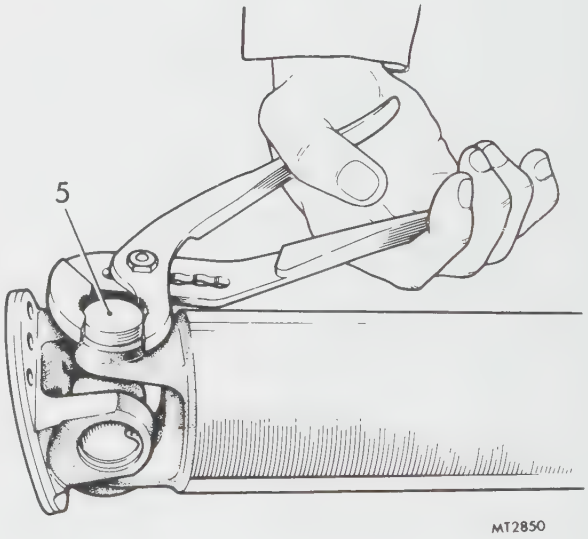

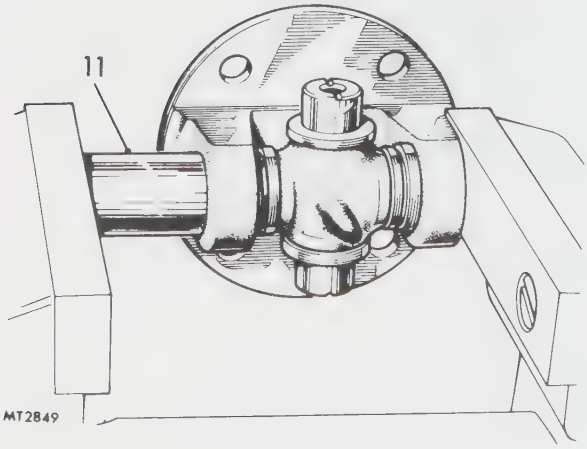

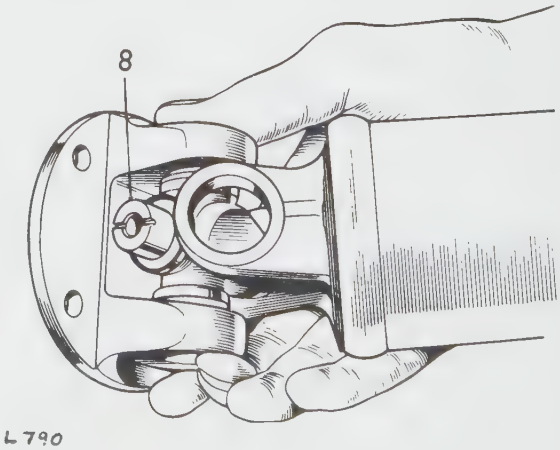

FINAL DRIVE OPERATIONS

Differential assembly – remove and refit 51.15.01

Differential assembly – overhaul 51.15.07

Final drive unit mounting plate rubbers – remove and refit 51.25.34

Final drive mounting plate – remove and refit 51.25.33

Final drive unit – remove and refit 51.25.13

Inner drive shaft bearing – remove and refit 51.10.04

Inner drive shaft oil seal – remove and refit 51.10.05

Pinion oil seal – remove and refit 51.20.01

CAUTION: The differential assembly of later vehicles are fitted with a collapsible pinion spacer in place of pinion shims, as a means of setting the pinion bearing preload. On production a protective cap was fitted over the pinion flange nyloc nut.
Particular care should be taken when completing operations involving the removal and refitting of the pinion flange and its retaining nut on these later axles. The torque figure of 90 to 120 lbf.ft (12.4 to 16.6 kgf.m) applicable to the flange nut fitted to shimmed pinions will–if applied to the collapsible spacer-completely collapse the spacer necessitating a complete strip and rebuild of the differential assembly to replace it.

WARNING: An overstressed collapsible spacer should not be used or left in place in a differential unit.

INNER DRIVE SHAFT BEARING

– **Remove and refit**	**51.10.04**
– **Inner drive shaft oil seal – remove and refit**	**51.10.05**

Special tools: S.4221A and adaptor set S.4221A-7B

Removing

1. Jack up the rear of the car, support the chassis on stands and remove rear wheel.
2. Remove the inner drive shaft flange/drive shaft coupling bolts.
3. Locate jack under the vertical link and raise the jack to relieve load from rear damper.
4. Remove the nut and washer securing the damper lower eye to the vertical link and pull the damper clear of the vertical link.
5. Remove the bolt and nut securing the radius rod to the vertical link.
6. Remove the jack from the vertical link.
7. Remove the bolt and nut securing the road springs to the vertical link.
8. Remove the four socket-headed screws securing the seal housing plate to the differential casing.

continued

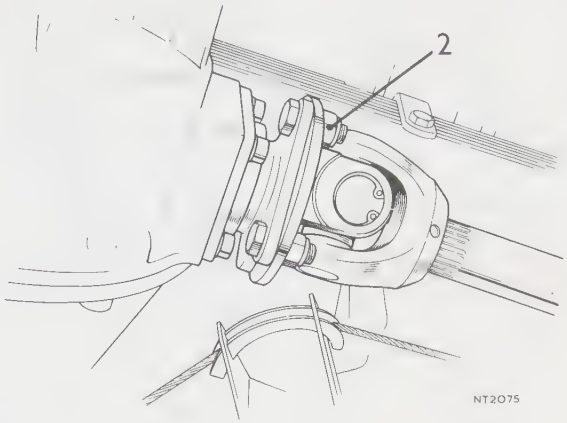

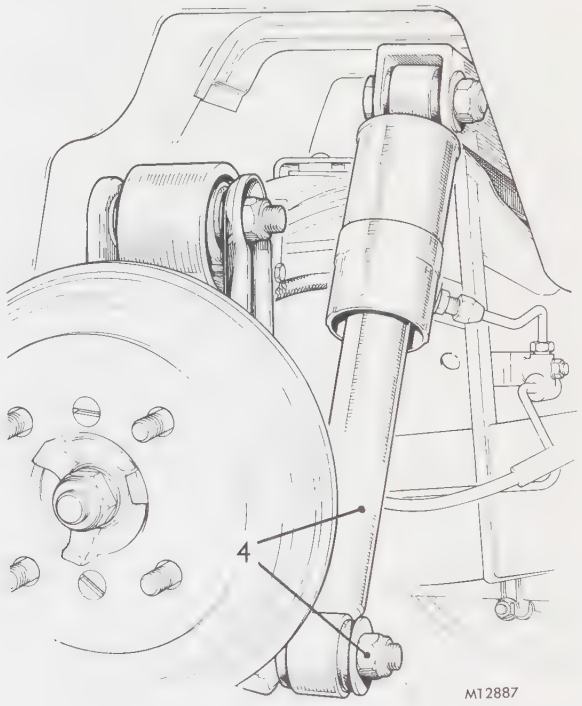

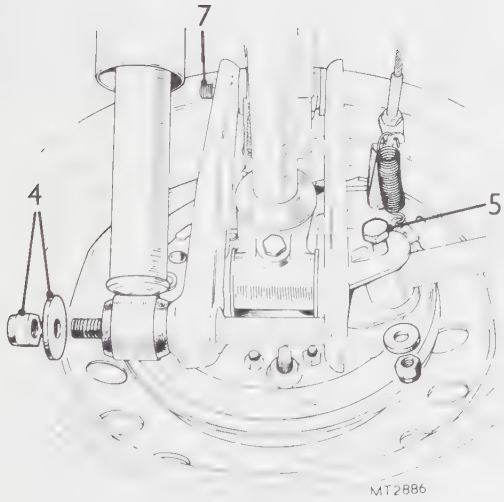

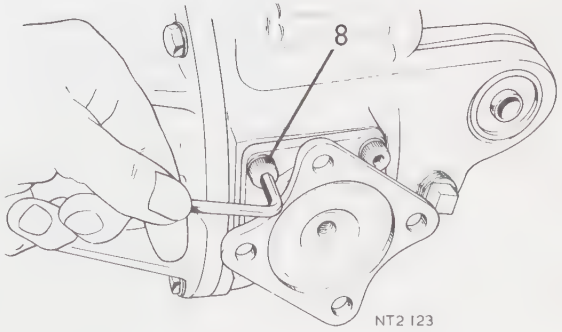

9. Place a suitable receptacle under the inner drive shaft to catch oil from the differential casing when the inner drive shaft is removed.
10. Raise the drive shaft clear of the inner drive shaft and withdraw the inner drive shaft from the differential casing.
    NOTE: If both inner drive shafts are to be removed identify them to prevent interchange on re-assembly.
11. Remove the circlip from the shaft.
12. Using Tool S.4221A and adaptor S.4221A-7B press the shaft from the bearing.
13. Withdraw the oil seal plate and drift out the oil seal.

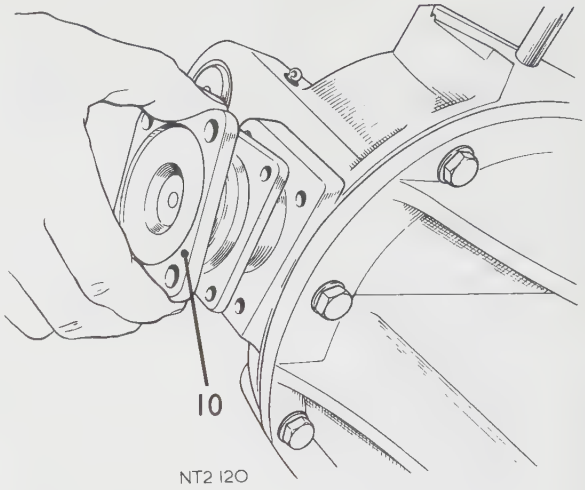

NT2 120

Refitting

14. Reverse instructions 1 to 13.
15. Top up the differential casing with fresh oil.

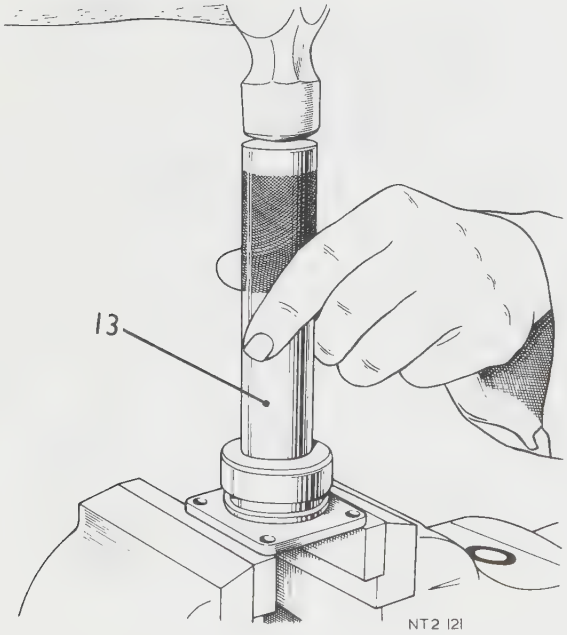

NT2 121

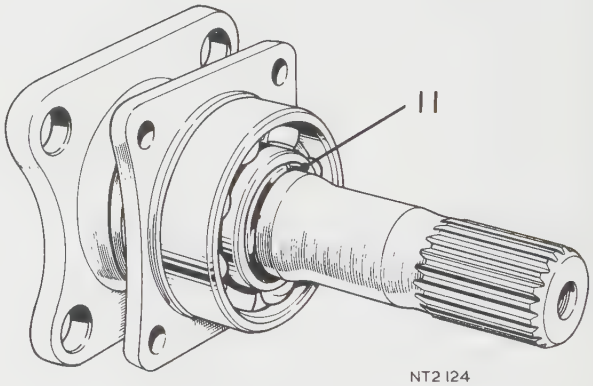

NT2 124

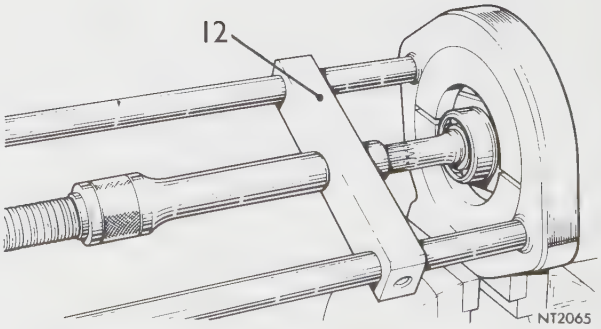

NT2065

DIFFERENTIAL ASSEMBLY

– Remove and refit 51.15.01

[CAUTION: Please read the instructions thoroughly before you attempt final drive repairs. If you lack the necessary skills or tools we suggest you leave this work to an Authorized Dealer or other qualified shop. Before taking a removed final drive unit in for repair, thoroughly clean its exterior but do not undertake any disassembly.]

Removing

1. Remove the final drive unit from the car. 51.25.13.
2. Clean and degrease the unit.
3. Identify fot reassembly and remove the inner drive shafts – instructions 2 to 10, 51.10.04.
4. Remove the pinion nut and driving flange instructions 5 to 8, 51.20.01.
5. Remove the four bolts and shakeproof washers securing the final drive mounting plate to the differential housing and remove the plate. 51.25.33.
6. Remove the eight bolts and spring washers securing the differential housing to the final drive casing and withdraw the differential assembly.

Refitting

7. Clean the differential and final drive casing mating faces, apply sealing compound and fit a new gasket.
8. Offer up the differential assembly to the final drive casing and secure with the eight bolts and spring washers and tighten evenly to 15 to 20 lbf ft (2.1 to 2.8 kgf m).
9. Refit the inner drive shafts. 51.20.04.
10. Refit the final drive mounting plate to the assembly.
11. Refit the pinion driving flange and nut – instructions 11 to 13, 51.20.01.
12. Fit the final drive unit to the car – 51.25.13 and refill the unit with a recommended grade of E.P. oil.

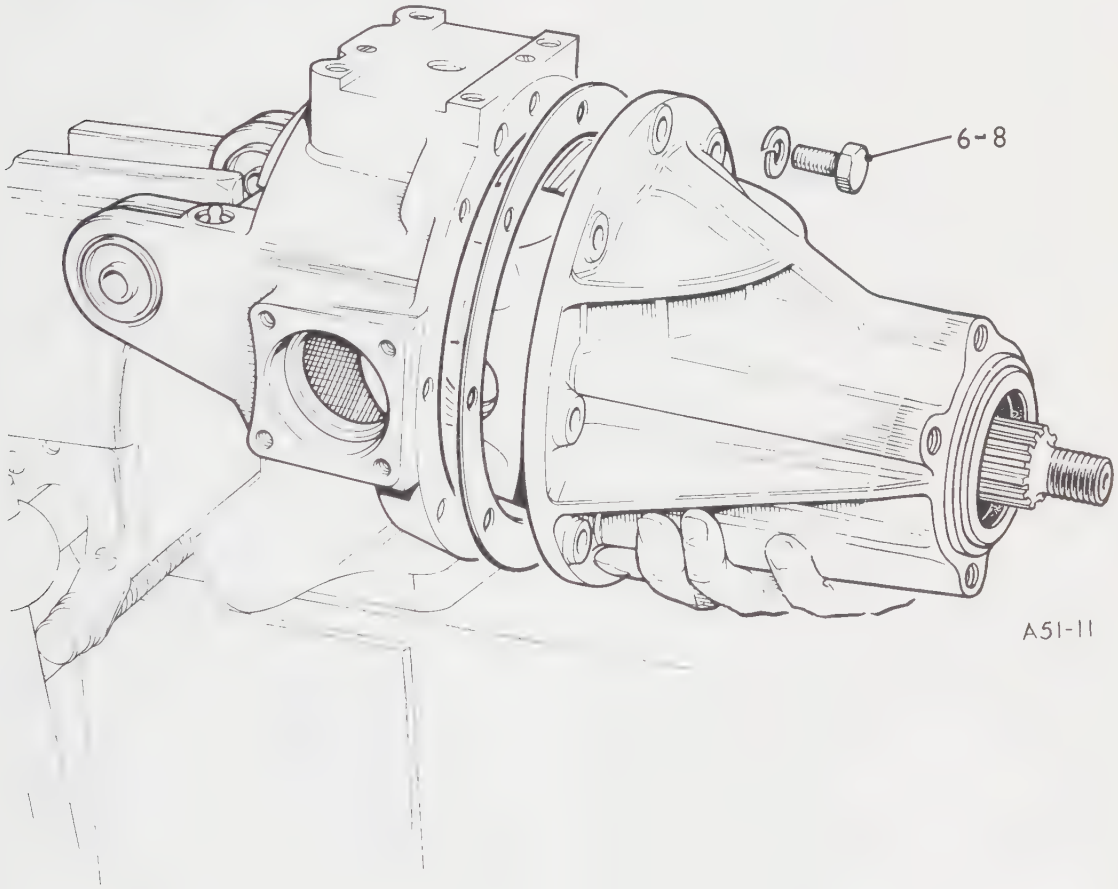

DIFFERENTIAL ASSEMBLY

– **Overhaul** **51.15.07**

Service tools: 47, 18G 47BD, S337 or RG 421, S4221A-17, 550, 18G 134DH, 18G 191, 18G 191M, S101, S101-1

Dismantling

1. Remove the differential assembly. 51.15.01.

Crown wheel and differential unit

2. Place the differential assembly in a vice (crown wheel uppermost).
3. Mark the bearing caps to identify original locations.
4. Remove the bearing cap bolts and spring washers. (4).
5. Remove the bearing caps.
6. Carefully lever the crown wheel and differential unit clear of the assembly housing.
7. Lift out the crown wheel and differential unit complete with carrier bearings and shims.
8. Using press 47 and adaptor 18G 47BD withdraw the carrier bearings.
9. Remove the eight bolts and spring washers securing the crown wheel to the differential unit and withdraw the crown wheel.
10. Drive out the pin retaining the differential pinion pin.
11. Remove the differential pinion pin.
12. Rotate the differential sun wheels to bring the planet wheels and their respective selective thrust washers clear of the differential unit.
13. Remove the two planet wheels and thrust washers.
14. Remove the two sun wheels and thrust washers.

continued

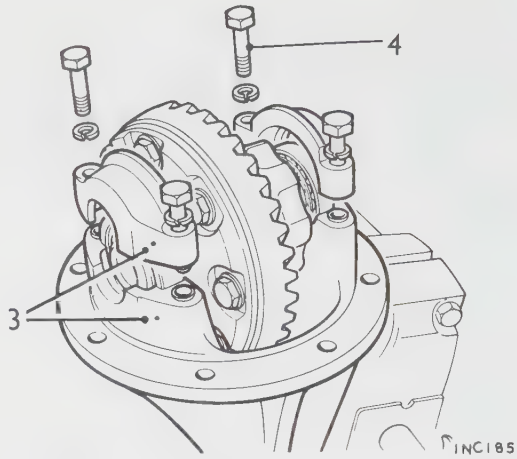

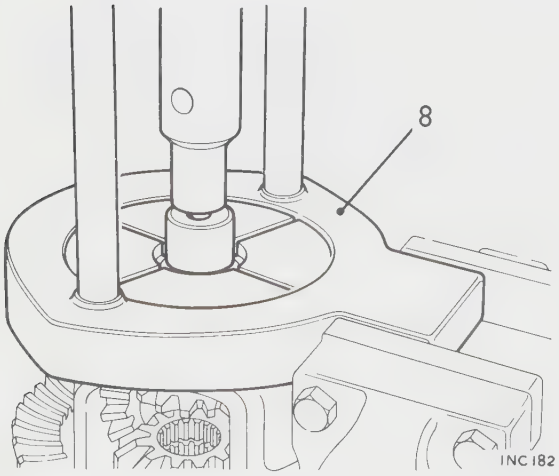

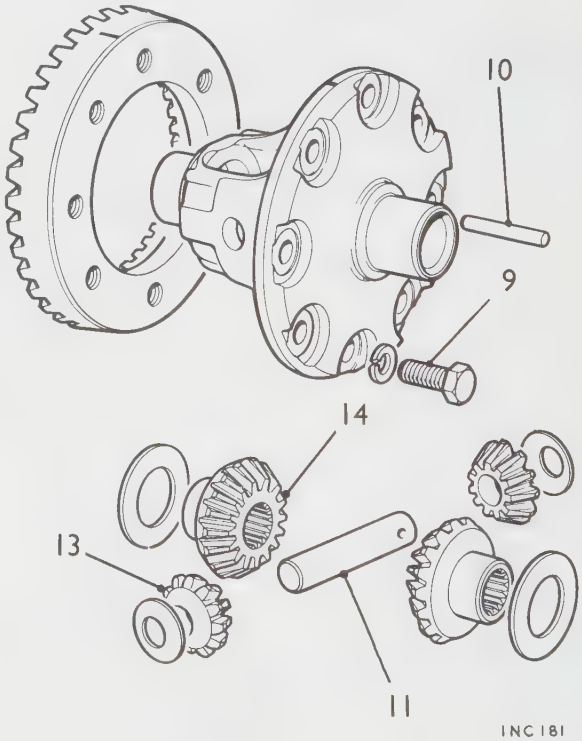

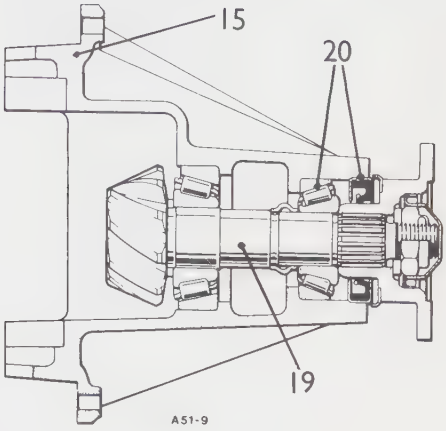

Pinion and bearings

15. Locate the differential assembly housing horizontally in the vice.
16. Remove the cap from the differential pinion flange.
17. Using Tool RG 421 to hold the pinion flange remove the pinion shaft nut and washer.
18. Withdraw the pinion flange.
19. Using a hardwood block carefully tap out the pinion complete with pinion head bearing, selective washer and collapsible spacer.
20. Carefully drive out the pinion outer bearing and oil seal.
21. Evenly drift out both bearing outer tracks.
22. Using press 47 and adaptor S4221A-17 remove the pinion head bearing and selective washer.
23. Thoroughly clean all components.

continued

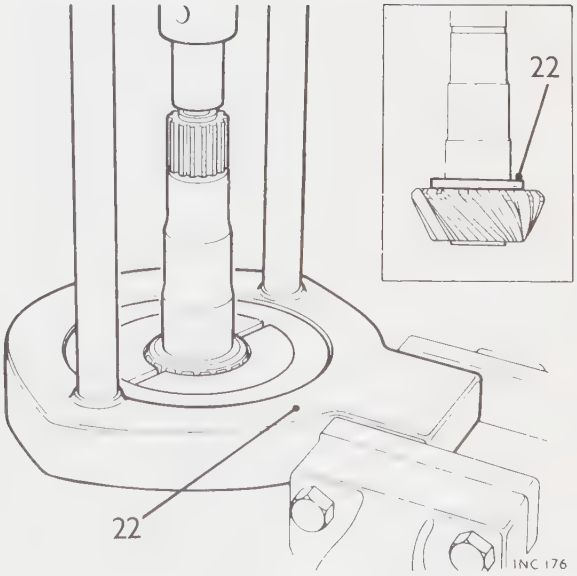

Assembling

Crown wheel and differential unit

24. Using tool 550 and 18G 134DH fit the carrier bearings to the differential unit. (Tapered face of bearings towards half shafts.)
25. *Lightly* lubricate the carrier bearings and locate the differential unit in the differential casing.
26. Rotate the differential unit to allow the bearings to settle and push the differential unit complete with bearings to one side of the differential casing.
27. Using a dial gauge mounted against the crown wheel mounting flange check for 'run-out'. If 'run-out' is found to exceed 0.003 in (0,08 mm) it will be necessary to remove the carrier bearings and renew the differential unit housing. Ensure before discarding the differential unit housing that the excessive 'run-out' reading obtained is not due to improperly seated bearing cups. If 'run-out' is within 0.003 in (0,08 mm) proceed as follows:
28. Ensuring that the bearing cups are properly in contact with the bearings, float the differential unit laterally until it butts against the bearing seats in either direction. Using the dial gauge measure this lateral free movement. Call the measurement *Dimension 'A'*. Record Dimension 'A' as it will be used later to determine the required shim pack for the carrier bearings and to obtain correct pinion backlash.
29. Remove the differential unit complete with bearings.
30. Lightly lubricate the sun wheel thrust faces and thrust washers and install them in the differential unit.
31. Mesh the planet wheels with the sun wheels ensuring the planets are diametrically opposite and rotate both sun wheels to bring the planets into their position in the differential unit casing.
32. Fit the differential pinion pin.
33. Check and assess planet end-float.
34. Remove the pinion pin and rotate both sun wheels to bring the planets clear of the differential unit casing.
35. Lubricate the planet thrust washers selected and slide the planets and washers into position. Fit the pinion pin and again check the planets for end-float and backlash. Zero backlash is required. Choose thrust washers as appropriate from the nine thicknesses available.
36. Fit the retaining pin to the pinion pin and stave the casing.
37. Fit the crown wheel.
38. Smear the threads of the crown wheel securing bolts with 'Locquic' grade 'T' primer and 'Locquic 75' compound. Fit the bolts and spring washers and evenly tighten to the recommended torque.

continued

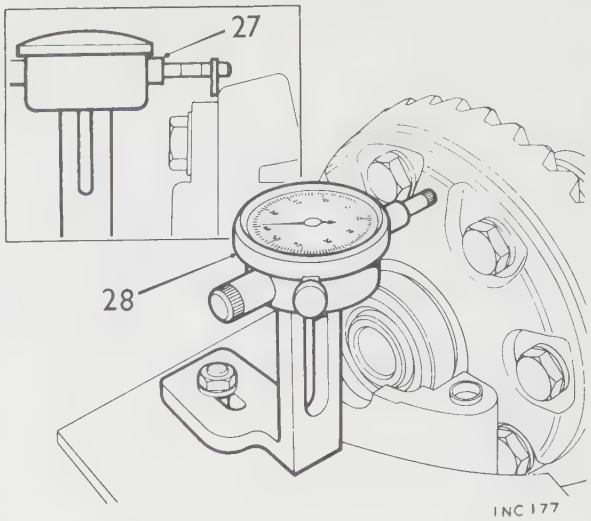

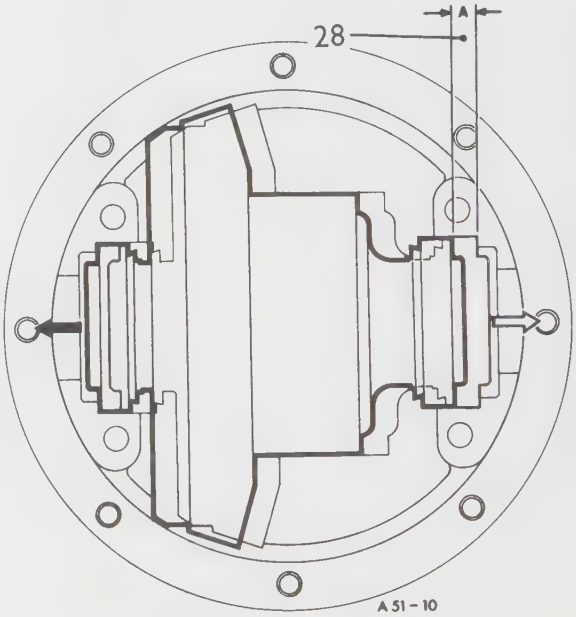

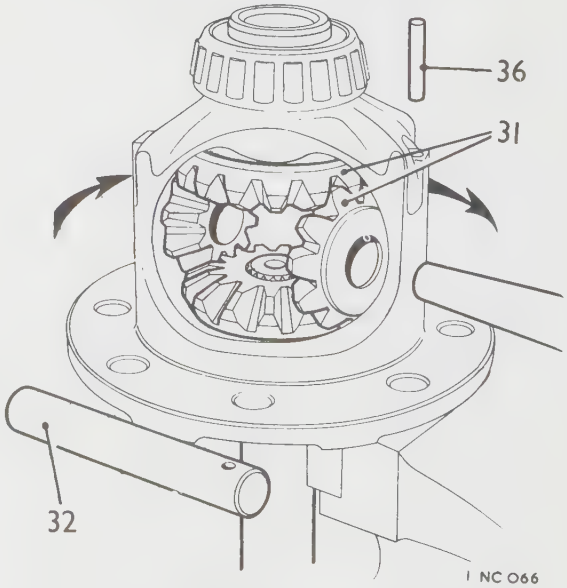

Pinion and bearings

39. Fit the pinion inner bearing to the dummy pinion 18G 191M. *The standard pinion head spacer 0.077 in (1,95 mm) is incorporated in the dimensions of the dummy pinion.*
40. Lightly lubricate the bearings and fit the dummy pinion, bearings spacer, washer and nut.
41. Gradually tighten the nut until a bearing pre-load of 15 to 18 lbf in (0,17 to 0,21 kgf m) is obtained. This can be measured using a lbf in (kgf m) scale torque wrench and a suitable size socket spanner.
42. Ensure the face of the dummy pinion is clean. Position the dial gauge foot of 18G 191 on the dummy head and zero the gauge on to the head.
43. Move the gauge foot over the centre of one differential bearing bore. Note the indicated measurement. Repeat for the opposite bearing bore.
44. *Add the two measurements and divide by two.*
45. Twenty-two pinion head washers are available ranging from 0.075 to 0.096 in (1,91 to 2,44 mm).
46. Remove the dummy pinion 18G 191M and dismantle.

Calculating pinion head spacer size

Example

Sum of each measurement divided by two	0.002 in (0,051 mm)
Plus dummy pinion spacer allowance	0.077 in (1,956 mm)
Required size of pinion head spacer	0.079 in (2,007 mm)

NOTE: Etched + or – markings will be found on the pinion face. These markings should be ignored since they are allowed for in the design and method of using the dummy pinion.

47. Fit the correct pinion head spacer to the pinion.
48. Fit the inner bearing to the pinion using S4221A-17.
49. Insert the pinion, spacer and bearing in the differential casing.
50. Fit a new collapsible spacer and the outer bearing to the pinion shaft.
51. Fit a new oil seal (lips towards pinion). The seal should be soaked in clean oil for one hour before fitting.
52. Fit the flange, washer and nut to the pinion shaft.
53. Gradually tighten the nut checking the bearing pre-load.
54. Rotate the flange to settle the bearings. Use an in/lb (kg/m) torque wrench or S98A check the torque required to rotate the flange.
55. Tighten the nut as required to obtain a torque (flange rotation) of 13 to 20 lbf in (1,80 to 2,77 kgf m).
    CAUTION: If the pinion nut is overtightened and the above torque figure exceeded it will be necessary to *renew* the collapsible spacer and repeat instructions 53 to 55.

continued

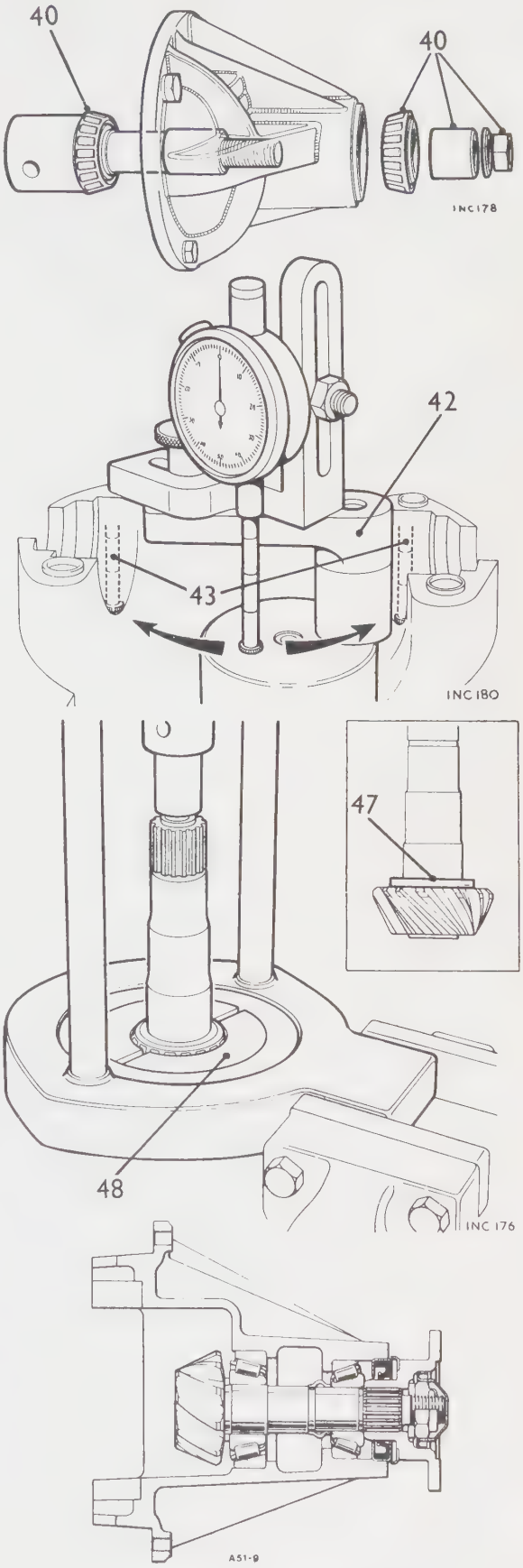

56. Place the differential unit/crown wheel assembly complete with bearing cups into position in the differential casing.
57. Move the crown wheel fully into mesh with the pinion and zero the dial gauge on the rear of the crown wheel.
58. Move the crown wheel and differential unit fully in the opposite direction. Note the gauge reading. This is the 'IN-OUT' of mesh clearance. Call this dimension 'B'.

Setting the Crown Wheel Backlash

Example

'IN-OUT of mesh' clearance
(Dimension B) Instruction 58 . . . 0.025 in (0,63 mm)
Minus required backlash 0.005 in . . 0.005 in (0,127 mm)
0.020 in (0,503 mm)

Plus required carrier bearing pre-load divided by two $\frac{0.004 \text{ in}}{2}$ . . . . . 0.002 in (0,051 mm)
0.022 in (0,554 mm)

This equals shims required for crown wheel side carrier bearing.

Total side clearance (Dimension A)
Instruction 28 . . . . . 0.060 in (1,52 mm)
Minus above calculation for crown wheel side shims . . . . . 0.022 in (0,554 mm)
0.038 in (0,976 mm)

Plus carrier bearing pre-load divided by two $\frac{0.004 \text{ in}}{2}$ . . . . . 0.002 in (0,051 mm)
0.040 in (2,027 mm)

This equals shims required for carrier bearing opposite crown wheel.

59. Allocate the shims calculated for each carrier bearing. Shims are available in sizes 0.003 in (0,076 mm), 0.005 in (0,127 mm), 0.010 in (0,25 mm), and 0.020 in (0,50 mm).
60 Fit the spreading Tool S101 to the differential casing;
61. Carefully stretch the differential casing to permit the differential unit complete with bearings and their respective shim packs to be placed in position.
IMPORTANT: Do not stretch more than is necessary or damage will be caused to the differential casing. Each flat on the turnbuckle is numbered. Do not exceed a stretch beyond three to four flats. The maximum permissible stretch is 0.008 in (0,20 mm). Do not lever against the stretcher.
62. Remove the stretcher.
63. Fit the bearing caps and the four securing bolts and spring washers. Evenly tighten the four bolts.

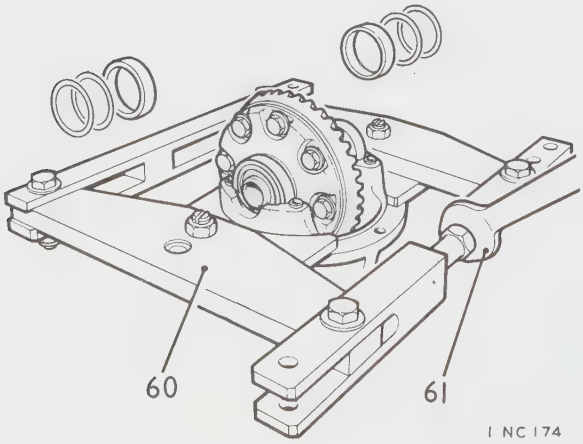

PINION OIL SEAL

– Remove and refit **51.20.01**

Service tools: S337 or RG 421

Removing

1. Raise the rear of the car and support securely.
2. Scribe the propeller shaft rear flange and differential pinion flange to identify original relationship.
3. Remove the four bolts and nuts securing the propeller shaft rear flange.
4. Release the propeller shaft from the differential pinion.
5. Remove the nut shield from the differential pinion flange.
6. Using a centre punch carefully mark the flange, pinion shaft and nut to identify original position.
7. Using Tool S337 to hold the differential pinion flange, unscrew and remove the nut and washer. Count the number of turns required for nut removal.
8. Withdraw the differential pinion flange.
9. Extract the pinion oil seal.

Refitting

10. Fit a new pinion oil seal (lip of seal towards axle).
    NOTE: This seal should be soaked in engine oil for one hour before installation.
11. Fit the differential pinion flange, aligning the flange marking (instruction 6) to the mark in the pinion shaft.
12. Fit the washer and nut. Count the number of turns and using Tool S337 to hold the pinion flange, tighten the nut until the pop marks are aligned.
13. Fit the nut shield to the flange.
14. Fit the propeller shaft noting the flange alignment marks.
15. Fit and tighten the shaft four securing bolts and nuts.
16. Lower the car.

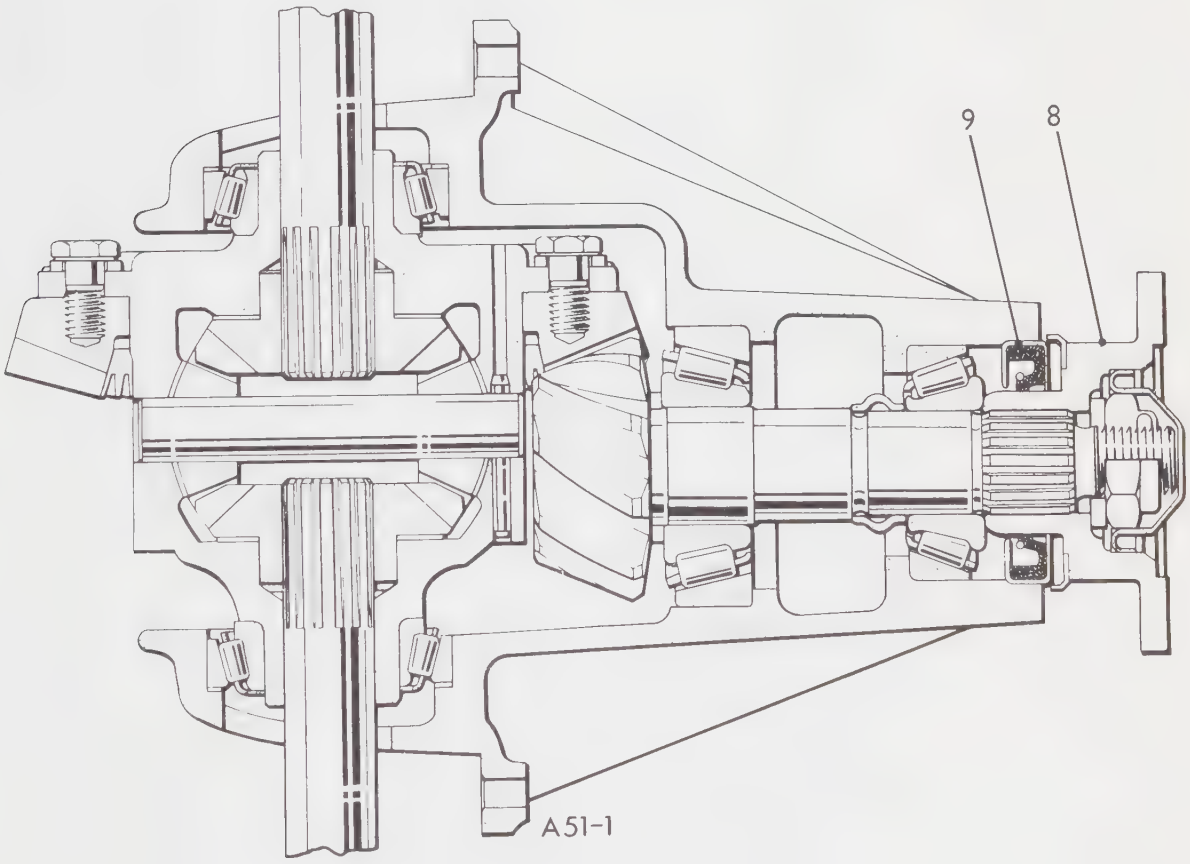

FINAL DRIVE UNIT

– Remove and refit 51.25.13

Removing

1. Place the car on a ramp or over a pit.
2. Jack up the rear of the car, support securely on stands and remove the rear wheels.
3. Release the dampers from the vertical links.
4. Disconnect the exhaust pipe at its rear mounting and remove the silencer.
5. Disconnect the propeller shaft from the differential pinion driving flange.
6. Remove the bolts and nuts securing both universal joints to the inner drive shaft flanges.
7. Remove the rear trim panel and rear spring access cover.
8. Remove the four nuts, spring plate and studs securing the rear spring to the final drive casing.
9. Remove the final drive rear mounting nut and special bolt.
10. Whilst supporting the final drive unit, remove the two nyloc nuts, washers and rubbers securing the front mounting plate to the chassis.
11. Manoeuvre the final drive unit clear of the chassis taking care to avoid oil spillage from the road spring stud holes.

Refitting

12. Offer up the final drive unit to its rear mounting location ensuring that the two rubber washers are positioned correctly on the outside of the mounting lugs. Secure the rear mounting with the special bolt and nyloc nut.
13. Offer up the final drive front mounting ensuring that the upper rubbers (stripped end downwards) are in position.
    Fit the lower rubbers, washers and nyloc nuts. Tighten the nuts to 26 to 34 lbf ft (3.6 to 4.7 kgf m). With the nuts tightened to the above torque figures it should be possible to rotate the lower rubbers with the fingers.
14. Connect the drive shaft universal joint flanges to the inner drive shafts and secure with bolts and nuts (four each flange).
15. Fit the propeller shaft to the differential pinion.
16. Connect the exhaust pipe to its rear mounting and fit the silencer.
17. Position the road springs so that the drive on the bottom leaf locates in the hole in the final drive unit spring platform. Fit the four studs, spring plate, washers and nyloc nuts. Tighten evenly to 26 to 34 lbf ft (3.6 to 14.7 kgf m).
18. Fit the spring access cover and the rear trim panel.
19. Connect the dampers to the vertical links.
20. Check the final drive unit oil level and top up as necessary.
21. Fit the road wheels.
22. Lower the car.

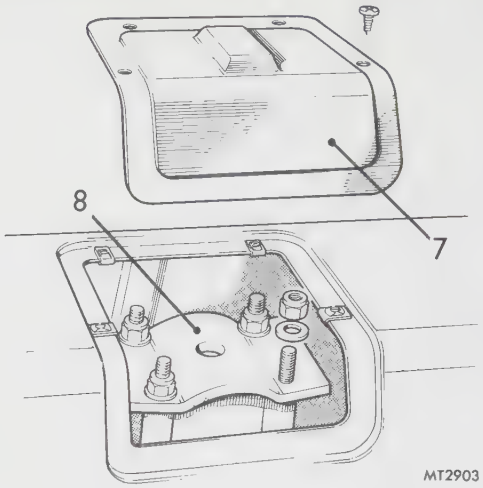

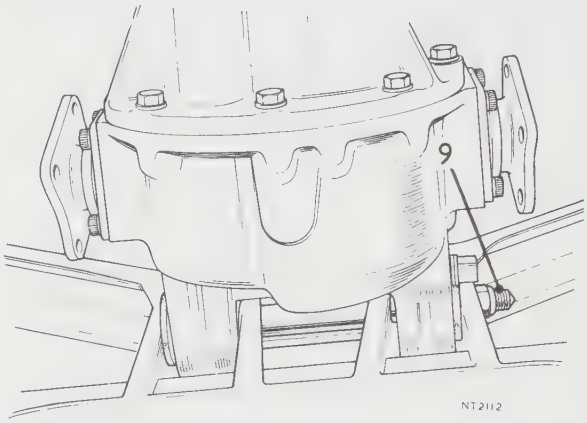

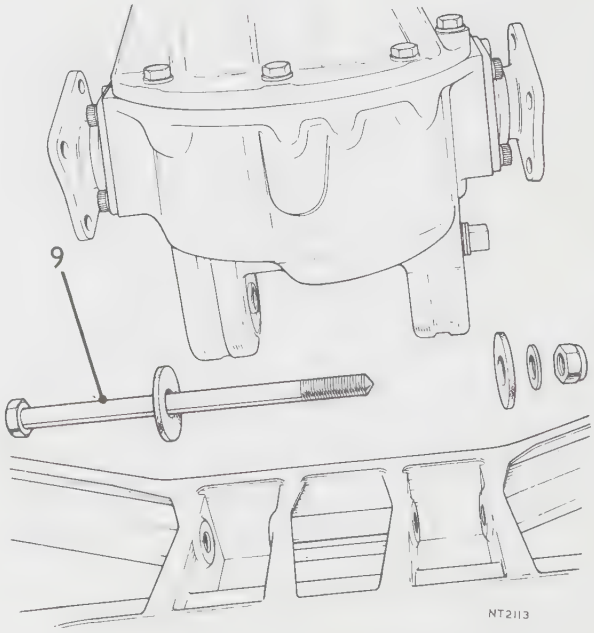

FINAL DRIVE UNIT MOUNTING PLATE

– Remove and refit **51.25.33**

Removing

1. Place the car on a ramp or over a pit.
2. Jack up the rear of the car at the two rear jacking points until the wheels are clear of the ramp or ground.
3. Disconnect the exhaust pipe at its rear mounting and the silencer at its two attachment points.
4. Mark for reassembly and disconnect the rear end of the propeller shaft from the pinion flange. 47.15.01.
5. Remove the pinion nut and flange – instructions 4 and 5, 51.20.01.
6. Remove the four bolts and shakeproof washers securing the mounting plate to the differential housing.
7. Remove the nyloc nut, special washer and lower rubber from both sides of the mounting plate and manoeuvre the plate off the captive studs and remove from the car. 51.25.34.

Refitting

8. Place the mounting plate in position and refit the pinion driving flange and nut – instructions 8 and 9, 51.20.01.
9. Refit the mounting plate and rubbers to the chassis – instructions 8 to 12, 51.25.34.
10. Reconnect the exhaust pipe and silencer.
11. Remove the car from the ramp.

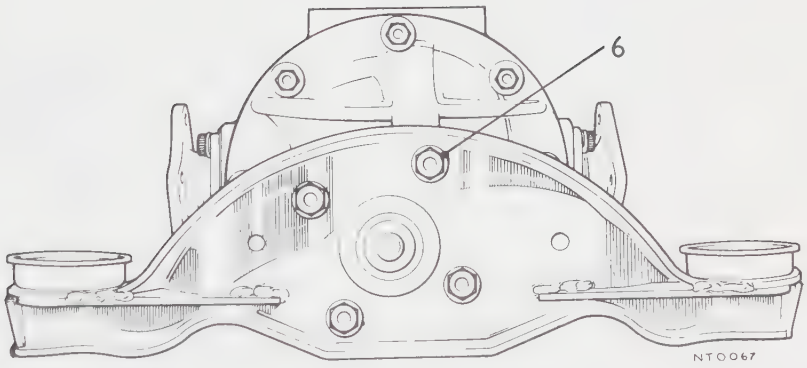

FINAL DRIVE UNIT MOUNTING PLATE RUBBERS

– Remove and refit **51.25.34**

Removing

1. Place the car on a ramp or over a pit.
2. Disconnect the exhaust pipe at its rear mounting and the silencer at its two attachment points.
3. Jack up the rear of the car under both sides of the chassis until the rear wheels are clear of the ramp or ground.
4. Mark for reassembly and disconnect the rear end of the propeller shaft from the pinion flange. 47.15.01.
5. Remove the four bolts and shakeproof washers securing the final drive mounting plate to the differential casing. 51.25.33.
6. Remove the two nyloc nuts (one each side) securing the mounting to the chassis, together with the special washer and lower rubber.
7. Using a suitable lever prise the mounting plate downwards until the upper mounting rubber can be removed from the captive stud. Repeat instructions on the other side.

Refitting

8. Prise the mounting plate downwards as in instruction 7 sufficiently to enable the replacement upper rubber to be fitted over the captive stud. Ensure that the stepped end of the rubber is facing downwards and locates squarely in the mounting plate cup. Repeat this instruction on the opposite side.
9. Fit the lower rubber and special washer and loosely secure – at this stage – with the nyloc nut. Repeat this instruction on the other side.
10. Secure the mounting plate to the differential casing with the four bolts and shakeproof washers.
11. Reconnect the rear end of the propeller shaft to the pinion flange ensuring that the assembly marks line up.
12. Lower the jack and finally tighten the two nyloc mounting nuts to 26 to 34 lbf ft (3.6 to 4.7 kgf m). It should be possible to revolve the lower mounting rubbers with the fingers when the nuts are tightened to this torque figure.
13. Reverse instructions 1 and 2.

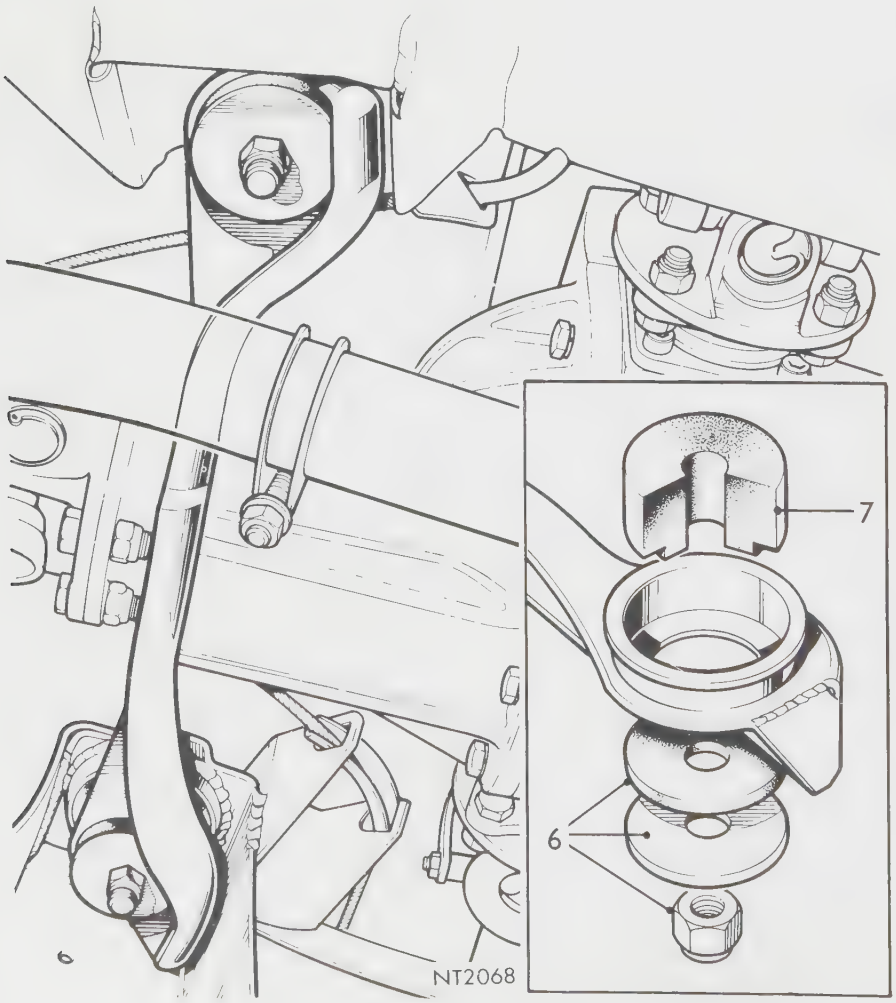

STEERING OPERATIONS

Camber angle – check and adjust 57.65.05

Front wheel alignment – check and adjust 57.65.01

Steering column
- flexible coupling – remove and refit 57.40.25
- lock/ignition switch – remove and refit 57.40.31
- overhaul 57.40.10
- remove and refit 57.40.01
- safety clamp – remove and refit 57.40.07

Steering geometry – check 57.65.00

Steering rack
- damper – remove and refit 57.35.10
- gaiters – remove and refit 57.25.02
- overhaul 57.25.07
- remove and refit 57.25.01

Steering wheel
- hub – remove and refit 57.60.02
- remove and refit 57.60.01

Tie rod ball joint
- inner – remove and refit 57.55.03
- outer – remove and refit 57.55.02

STEERING RACK AND PINION

– Remove and refit 57.25.01

Service Tool S.341

Removing

1. Remove the nyloc nut and plain washer securing the outer tie rod to left and right hand steering arms.
2. Release both outer tie rod ends from the steering arms.
3. Remove the pinch bolt clamping the steering rack pinion to the lower end of the flexible coupling.
4. Remove the four nyloc nuts and plain washers securing the steering rack 'U' bolts to the chassis. Withdraw the two reinforcement plates.
5. Remove the 'U' bolts complete with the rack clamp brackets.
6. Slide rack forward to disengage the rack pinion splines from the flexible coupling.
7. Disconnect earthing strap from rack plug and withdraw the steering rack.

Refitting

8. Remove the centre plug from rack plunger and align dimple in the rack shaft with plug aperture. In this position the rack shaft is centralised.
9. Carefully slide rack into position in car taking care not to disturb position of rack shaft.
10. Fit plug to plunger ensuring earthing strap is not omitted.
11. With steering wheel held in straight ahead position engage rack pinion shaft splines in the flexible coupling and fit and tighten the pinch bolt in the flexible coupling.
12. Ensure the rack mounting rubbers are correctly positioned on inboard side of rack flanges with lip under the straight face on the flange – (Tool S.341).
13. Fit 'U' bolts and clamp brackets.
14. Fit the reinforcement plates to the 'U' bolts ensuring angled lips are inboard with lip projecting downward.
15. Fit the plain washers and nyloc nuts to 'U' bolts.
16. With angled lips of the reinforcement plates in contact with the inboard edges of the chassis brackets and the mounting rubbers compressed tighten the 'U' bolt securing nuts.
17. Fit tie rod outer ends to steering arms.

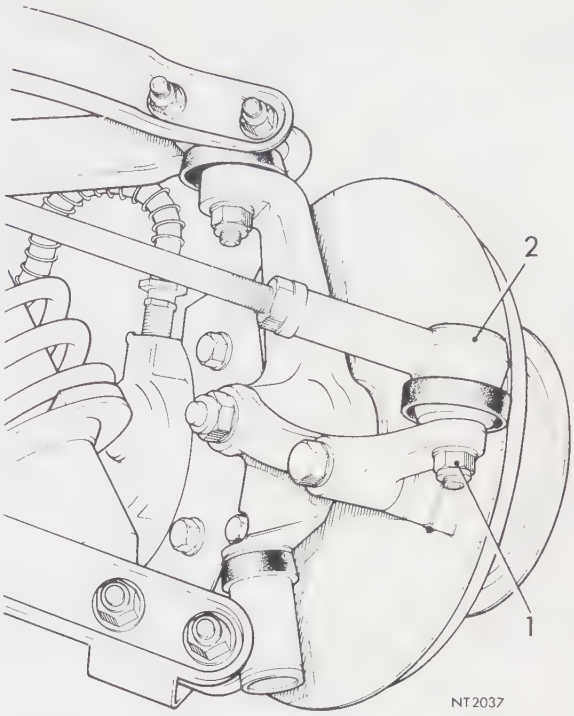

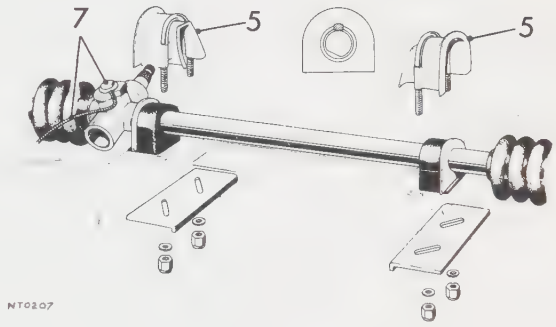

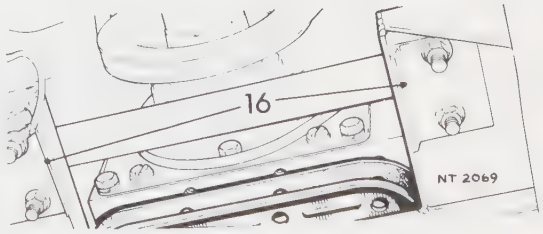

STEERING RACK GAITERS

– Remove and refit **57.25.02**

Removing

1. Slacken the locknut securing tie rod outer ball joint.
2. Remove the nut and washer securing the tie rod outer ball joint to the steering arm.
3. Release the outer ball joint from the steering arm .
4. Unscrew the outer ball joint and locknut from the tie rod.
5. Remove the inner and outer clips retaining the gaiter to the rack and tie rod respectively.
6. Withdraw the gaiters.
7. Repeat above instructions on opposite tie rod.

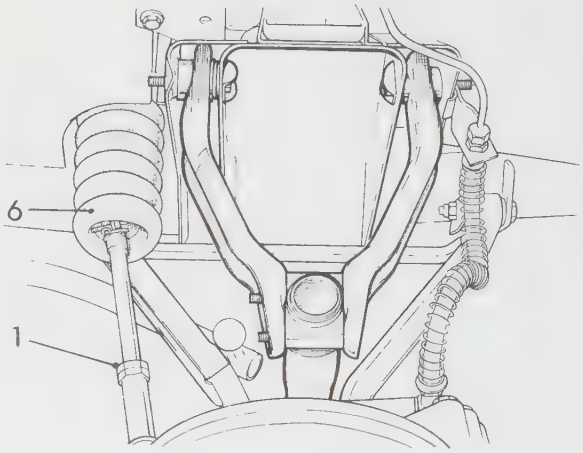

Refitting

8. Lubricate the tie rod inner ball joints with fresh grease.
9. Slide the new gaiters along the tie rods into position on the rack and secure with clip.
10. Screw locknut and tie rod outer ball joint assembly on tie rod and locate them as near as possible to original locations.
11. Connect outer ball joint to steering arm and fit plain washer and nut.
12. Repeat instructions 8 to 11 on opposite tie rod.
13. Check front wheel toe-in and adjust as necessary, ensuring tie rods are equally adjusted. See 57.65.01.
14. Secure the outer ball joint assemblies with their respectives locknuts.
15. Adjust the outer end of both gaiters so that they are capable of accommodating movement of the tie rods when moving from lock to lock.

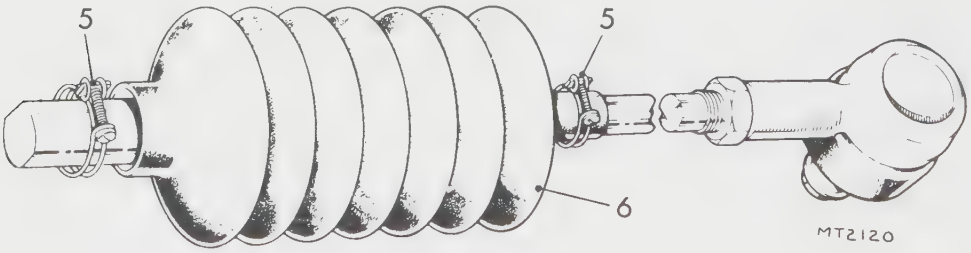

STEERING RACK AND PINION

– Overhaul 57.25.07

1. Remove the rack from the car. See 57.25.01.

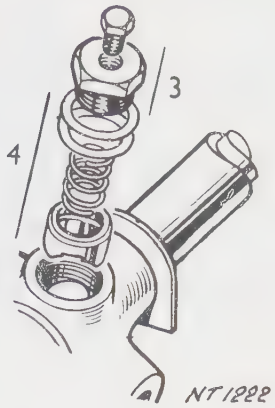

Dismantling

Rack plunger

2. Slacken the plug securing the rack plunger to the rack housing.
3. Remove the plug and shim pack.
4. Withdraw the spring, washer and plunger.

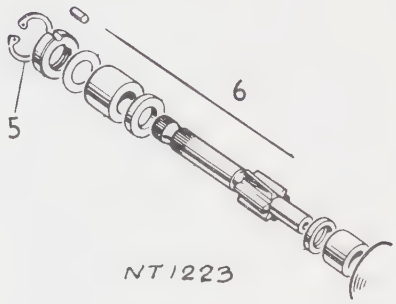

Pinion

5. Remove the circlip retaining the pinion to the rack housing.
6. Withdraw pinion complete with plug-end, locating pin, shims, bush and upper thrust washer.

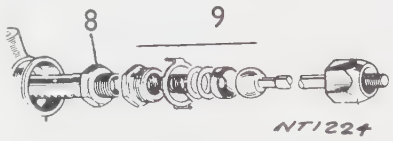

Tie rods and rack shaft

7. Release the clips securing the gaiters to the rack housing and tie rods and slide the gaiters clear of the rack.
8. Slacken the locknuts securing inner ball joint adaptors to the rack shaft.
9. Unscrew and remove the inner ball joint adaptors and tie rods.
10. Remove the locknuts and withdraw the rack shaft.

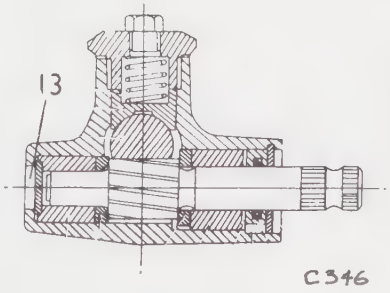

Rack housing bush

11. Remove the bush from the rack housing.

Pinion housing

12. Extract the pinion lower thrust washer.
13. Drive or press out the pinion end cover and the lower bush.

Assembling

Rack housing bush

14. Fit a new bush to the rack housing.

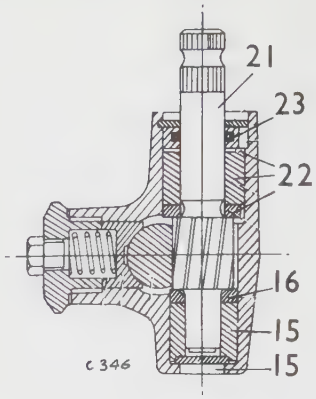

Pinion housing

15. Fit the end cover and lower bush to the pinion housing ensuring that the recessed end of the bush is adjacent to the end cover.

Rack shaft and tie rods

16. Insert pinion lower thrust washer in position above pinion lower bush ensuring that the internal fillet faces away from the bush.
17. Insert rack shaft in housing and fit locknuts.
18. Fit both tie rods and adaptors and secure with locknuts (torque 80 lbf ft (11.06 kgf m)).
19. Pack tie rod inner ball joints and gaiters with approximately 2 oz (56 gms) of grease each side and secure gaiters to rack.

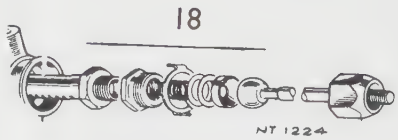

Pinion

20. Rotate rack shaft until teeth will permit pinion engagement.
21. Fit pinion to pinion housing.
22. Fit upper thrust washer, bush and shims.
23. Fit a new internal 'O' ring to the plug-end.
24. Fit circlip and check pinion end movement. End movement must not exceed 0.010 in (0.254 mm). Adjust shim pack as necessary.

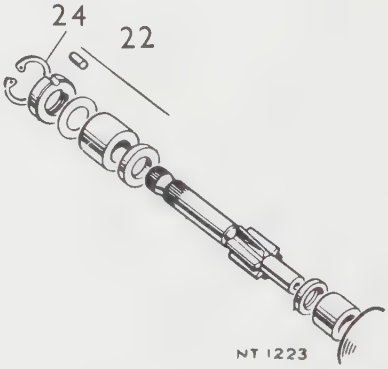

Rack plunger

25. Fit plunger.
26. Fit the damper plug, shims and spring.
27. Check the rack shaft for side movement (90° to shaft axis). Side movement should be within 0.004 to 0.008 in (0.1016 to 0.2032 mm). Adjust as required by adding or removing shims as necessary.

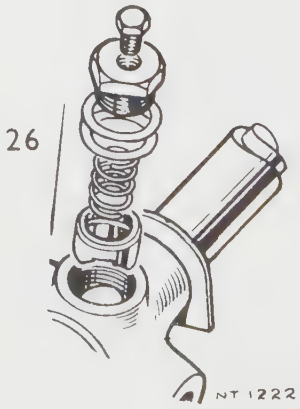

STEERING RACK DAMPER

– Remove and refit **57.35.10**

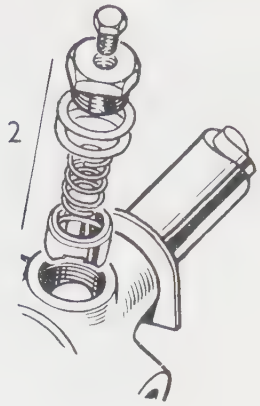

Removing

1. Working from underneath the car, disconnect the earthing strap at the damper plug.
2. Unscrew the damper plug and remove plug, shims, spring washer and plunger.

Refitting

3. Fit plunger and washer.
4. Fit the damper plug, shims and spring.
5. Check the rack shaft for side movement (90° to shaft axis) side movement should be within 0.004 to 0.008 in (0.1016 to 0.2032 mm). Adjust as required by adding or removing shims as necessary. Ensure earthing strap is connected.

STEERING COLUMN ASSEMBLY

– Remove and refit **57.40.01**

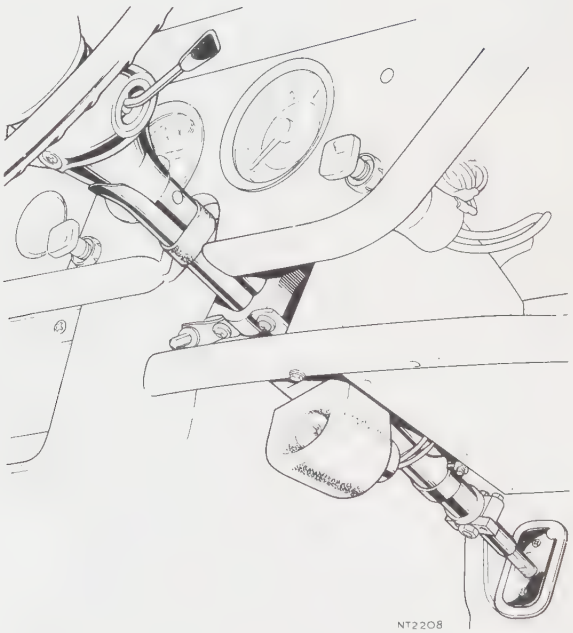

Removing

1. Disconnect the battery.
2. Remove the driver's parcel shelf.
3. Remove the pinch bolt securing the steering mast to the flexible coupling.
4. Remove the nuts, spring and plain washers from the two bolts securing the steering column forward bracket.
5. Withdraw forward support housing and felt liner.
6. Disconnect connections for horn, trafficators and lights.
7. Disconnect electrical plug from steering column lock.
8. Remove the two cap screws securing the steering column rear bracket and withdraw both clamp halves and upper screwed plate.
9. Withdraw steering column complete with tie-bar.

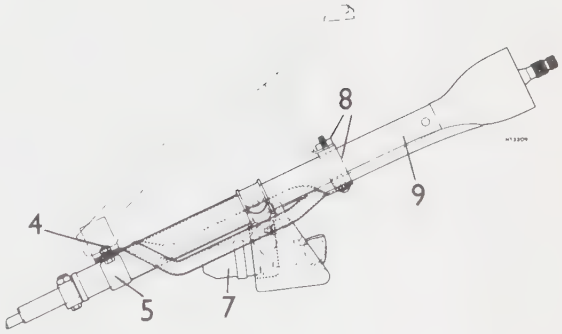

Refitting

10. Locate road wheels in straight ahead position.
11. Hold steering wheel with two spokes horizontal and the third spoke towards drivers seat and engage lower end of steering mast in splines of flexible coupling.
12. Fit and tighten pinchbolt in flexible coupling.
13. Slide tubular distance piece rearwards and fit felt over steering mast housing ensuring ends of felt are below mast housing.
14. Engage forward ends of tie-bar in forward mounting bolts.
15. Fit felt housing and engage forward mounting bolts. Fit plain and spring washers and nuts to mounting bolts.
16. Ensure spring clip is fitted on mast housing to align with rear clamp bracket.
17. Fit upper and lower clamp halves to mast housing.
18. Place screwed plate in bracket above clamp halves.
19. Enter cap bolts through tie bar, upper and lower clamp halves, and mounting bracket and engage screwed plate. Tighten cap bolts.
20. Tighten bolts and nuts securing forward bracket.
21. Make good connections to horn, lights, trafficators and steering lock.
22. Fit drivers parcel tray.
23. Connect battery.

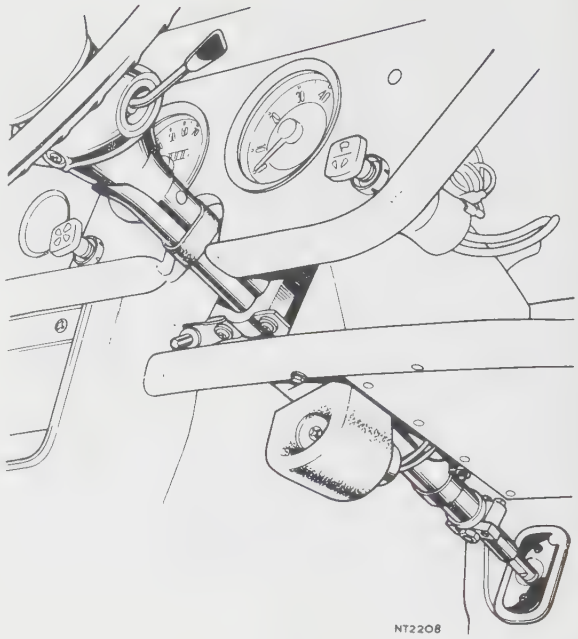

STEERING COLUMN SAFETY CLAMP

– Remove and refit 57.40.07

Removing

1. Slacken and remove the two bolts and spring washers securing clamp halves to steering mast.
2. Withdraw clamp.
3. Slacken locknut and grub screw.

Refitting

4. Offer up clamp halves to steering mast ensuring the straight member sits across the flat on the steering mast.
5. Engage bolts complete with spring washers.
6. Slide clamp rearwards until it is against the steering mast housing. Ensure plastic thrust washer is located between clamp bracket and mast housing.
7. Tighten clamp bolts 6 to 9 lbf ft (0.8 to 1.2 kgf m).
8. Tighten grubscrew to 18 to 20 lbf ft (2.5 to 2.8 kgf m).
9. Tighten locknut.

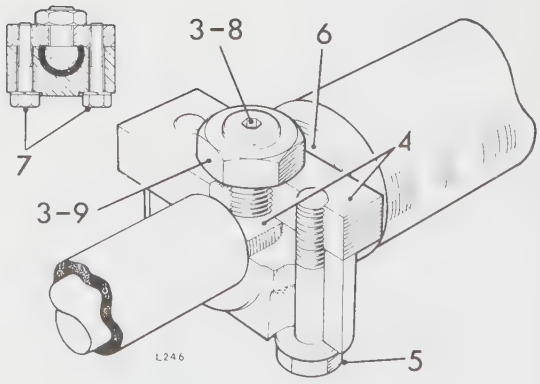

STEERING COLUMN UNIT

– Overhaul 57.40.10

1. Remove the steering column from the car. 57.40.01.

Dismantling

2. Remove the steering wheel. 57.60.01.
3. Remove the lights and trafficator, switches. 86.55.54, 86.65.17.
4. Unlock the steering column lock.
5. Remove the two set bolts and spring washers securing the safety clamp and remove the safety clamp and thrust washer.
6. Withdraw the lower steering mast.
7. Withdraw the cap from the lower end of the steering column tube and remove the tubular distance piece.
8. Move the upper steering mast axially towards the upper end of the column tube, and remove the trafficator cam.
9. Move the steering mast axially towards the lower end of the column tube until the column is felt to butt against the column lower bush.
10. Depress the rubber locating buttons on the column lower bush and withdraw the steering mast and the lower bush.
11. Remove the lower bush from the mast.
12. Remove the upper bush from the column tube.

Assembling

13. Fit a new upper bush to the column tube ensuring that it is entered with the rubber dots on the end face of the bush leading. That is with the rubber dots towards the bottom of the column tube.
14. Enter the steering mast from the bottom of the column tube ensuring that the upper bush is not displaced and that the rubber locating dowels remain aligned with the holes in the column tube.
15. Enter the lower bush in the column tube ensuring that the rubber dots on the end face of the bush are trailing (dots to bottom of tube) and that the rubber locating dowels engage the holes in the column tube.
16. Fit the trafficator cam.
17. Fit the steering column tubular distance piece.
18. Fit the end cap to the column tube.
19. Fit the lower steering mast.
20. Align the flat on the lower mast with the slot on the upper mast and fit the thrust washer and safety clamp. Do not tighten the safety clamp at this stage. The safety clamp must be tightened after the column is installed in the car and the position of the lower column determined. (Instructions 6 and 7. 57.40.25.)
21. Fit the lights and trafficator switches.
22. Fit the steering wheel.

57.40.10

STEERING COLUMN FLEXIBLE COUPLING

– Remove and refit **57.40.25**

Removing

1. Slacken the two bolts on the steering column safety clamp.
2. Remove the pinchbolts securing the flexible coupling to the steering column lower shaft and the rack pinion shaft.
3. Slide lower steering column shaft clear of flexible coupling.
4. Withdraw flexible coupling from the steering rack pinion shaft.

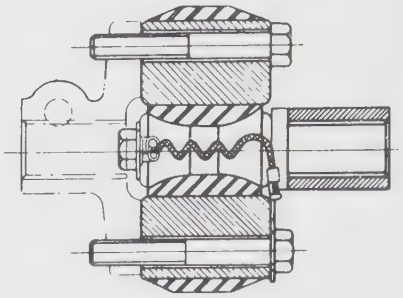

NT 1225

Refitting

5. Engage flexible coupling on pinion shaft and fit and tighten the pinchbolt.
6. With front wheels in straight ahead position and steering wheel in central position engage the lower steering column shaft in flexible coupling. Fit and tighten pinchbolt.
7. Slide safety clamp upwards until it abuts against the steering column housing. Tighten the safety clamp bolts, Torque 6 to 9 lbf ft (0.8 to 1.2 kgf m).

STEERING COLUMN LOCK/IGNITION SWITCH

– Remove and refit **57.40.31**

Removing

1. Remove steering column assembly. 57.40.01.
2. Remove the two nuts and washers securing steering lock shroud and withdraw shroud and steering column tie-bar.
3. With a centre punch mark the centre of the two shear bolt heads securing the steering lock clamp bracket.
4. Using a small chisel unscrew the shear head bolts.

   or

4a. If instruction 4 proves unsuccessful drill into the shear bolt heads where previously marked by centre punch and using an Easiout extractor unscrew the shear-heads bolts.

5. Remove the steering lock.

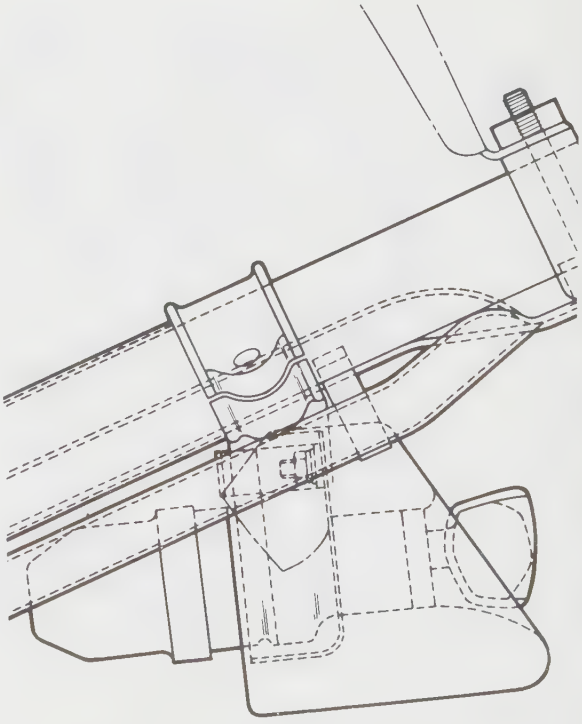

NT 2209 A

Refitting

6. Offer up steering column lock to steering column and locate the dowel in the column drilling.
7. Fit steering lock clamp and secure with two new shear bolts.
8. Evenly tighten shear bolts until heads shear.
9. Install steering column assembly in car. 57.40.01.

TIE ROD BALL JOINT – OUTER

– Remove and refit 57.55.02

Removing

1. Slacken the locknut securing tie-rod outer ball joint to tie-rod.
2. Remove the nyloc nut securing ball joint to steering arm. Detach ball joint from steering arm.
3. Unscrew the ball joint housing from tie-rod.

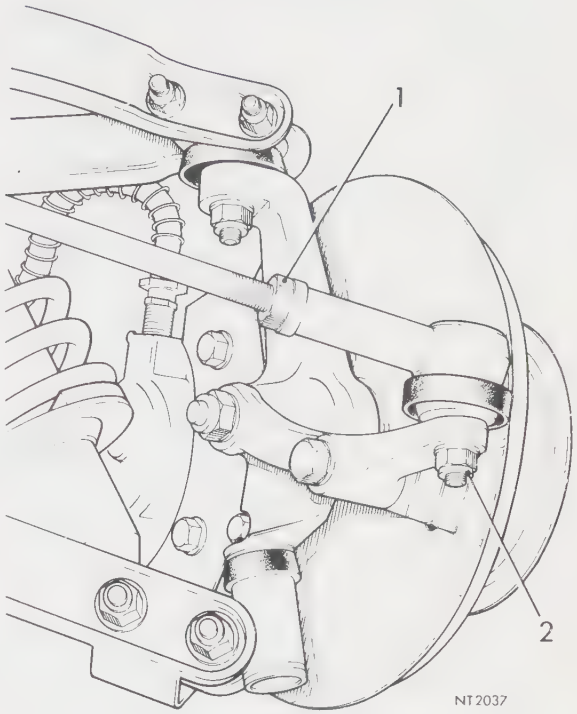

Refitting

4. Screw the ball joint housing into position on the tie rod. The distance between tie rod ball joint centres (inner to outer) is a nominal 8.72 in (221.5 mm).
5. Connect the ball joint to the steering arm and secure with the nyloc nut.
6. Check and adjust front wheel track as necessary. See 57.65.01.
7. Tighten the tie-rod locknut.

TIE ROD BALL JOINT – INNER

– Remove and refit **57.55.03**

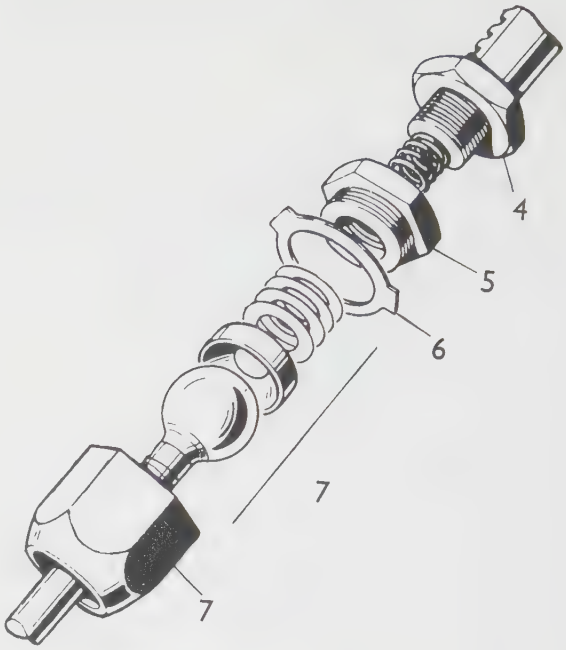

Removing

1. Remove the tie rod outer ball joint and housing.
2. Release all gaiter clips, remove the gaiter.
3. Wipe the grease from the inner ball joint.
4. Slacken the locknut securing inner ball joint adaptor to the steering rack.
   CAUTION: To prevent stress being transmitted to the pinion the opposite adaptor should be held with a spanner during this operation.
5. Unscrew the inner ball joint adaptor from the rack shaft observing the caution mentioned in 4.
6. Straighten the lock tabs on the adaptor/ball housing washer.
7. Unscrew the adaptor from the ball housing and withdraw spring, shims, ball seat and tie rod from housing.

Refitting

8. Lubricate the ball housing and insert the tie rod.
9. Fit the ball seat, shim(s), new tab washer and adaptor.
10. Tighten the adaptor, torque 80 lbf ft (11.06 kgf m), and check the tie rod for end-float and articulation. End-float should be within 0.0005 to 0.003 in (0.0127 to 0.0762 mm), there must be no tight spots in articulation. Adjust by adding or removing shims as necessary. Shims available are 0.002, 0.004 and 0.010 in (0.0508, 0.1016 and 0.254 mm).
11. Bend over lock washer tabs.
12. Slide the spring into the adaptor.
13. Fit the locknut to the rack shaft.
14. Fit and tighten the adaptor to the rack shaft and secure the locknut to a torque of 80 lbf ft (11.06 kgf m).
    CAUTION: When tightening the adaptor and locknut employ a spanner at the opposite adaptor to prevent stress to the pinion.
15. Cover the adaptors with fresh grease.
16. Fit the gaiters and clips.
17. Fit the tie rod outer end.
18. Check and adjust front wheel toe-in as necessary.

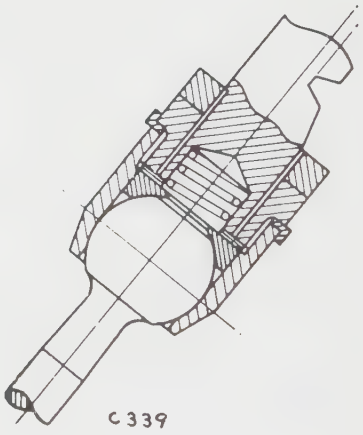

STEERING WHEEL

– Remove and refit 57.60.01

Removing

1. Prise off steering wheel pad.
2. Prise out horn push.
3. Withdraw the horn brush connection.
4. Remove the nut and washer securing steering wheel hub to steering mast.
5. To ensure that the steering wheel hub will be replaced in its original spline location scribe both hub centre and top of steering mast.
6. Using a suitable extractor withdraw the steering wheel.

Refitting

7. Fit the steering wheel and hub to steering mast. If the steering wheel was withdrawn without spline location being marked, set the front wheels to the straight ahead position and centralise the steering wheel.
8. Reverse instructions 1 to 4.

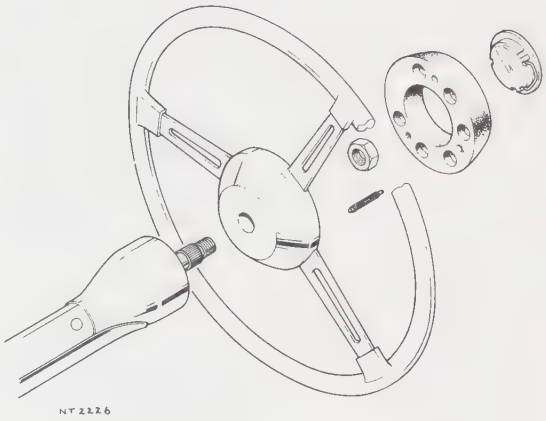

STEERING WHEEL HUB

– Remove and refit 57.60.02

Removing

1. Remove steering wheel and hub from car. 57.60.01.
2. Remove the six bolts and washers securing the steering wheel spokes to the hub.

Refitting

3. Reverse instructions 1 and 2.

STEERING GEOMETRY

57.65.00

Only two adjustments are possible: Front wheel alignment and Camber angle:

DATA	Kerb condition	Laden condition (2 up)
Camber	3° Positive ± 1°	2° Positive ± ½°
Castor	4° ± 1°	4½° ± ½°
King pin inclination	5¾° ± 1°	6¾° ± ¾°
Wheel alignment	1/16 - 1/8 in Toe-in (1.59 - 3.18 mm)	0 - 1/16 in Toe-in (0 - 1.59 mm).

FRONT WHEEL ALIGNMENT

– Check and adjust 57.65.01

Checking

1. Locate the car on level ground and position the front wheels in straight ahead position.
2. Using wheel alignment equipment check the front wheels for toe-in. Front wheel toe-in should be within 1/16 to 1/8 in (1.59 to 3.18 mm).

Adjusting

3. Slacken the outer clips on the rack gaiter.
4. Slacken the locknuts at the tie rod outer ends.
5. Shorten or extend both tie rods an equal amount to obtain the required toe-in of 1/16 to 1/8 in (1.59 to 3.18 mm).
6. Tighten the locknuts at the tie rod outer ends.
7. Tighten the gaiter clips.

NOTE: Both tie rods should be adjusted equally. Differences in tie rod lengths will result in incorrect wheel angles on turns.

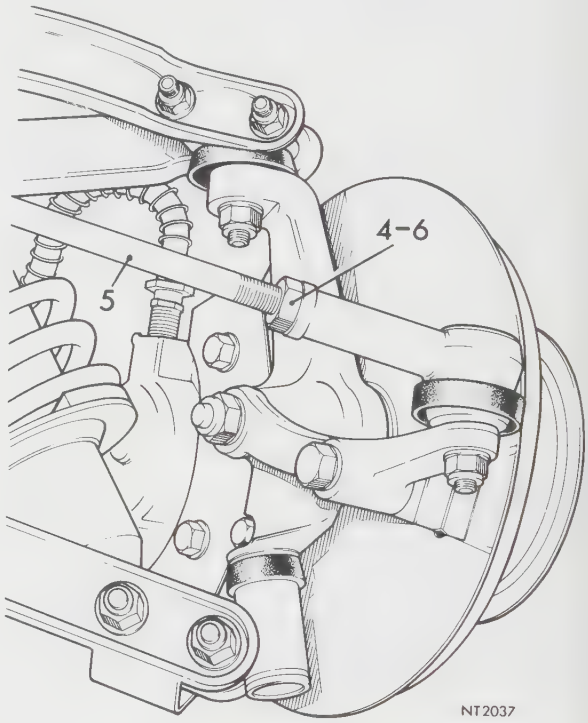

CAMBER ANGLE

– Check and adjust 57.65.05

Front wheel camber should be within the following limits:

Kerb condition	3° Positive ±1°
Laden condition (2 up)	2° Positive ±½°

Adjusting

1. Jack up the car and support chassis on stands.
2. Slacken the two nuts securing the lower wishbone bracket studs to the inner side of the chassis.
3. Remove or add shims equally to both lower wishbone brackets as necessary. Add shim(s) to go negative: remove shim(s) to go positive. One shim equals approximately 1°. Repeat as necessary on opposite wishbone.
4. Tighten the nuts securing the lower wishbone mounting bracket studs.
5. Remove the chassis stands.
6. Recheck the front wheel alignment.

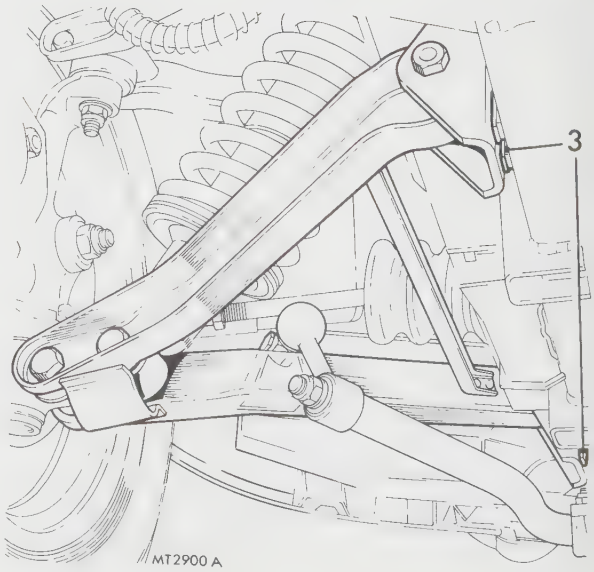

FRONT SUSPENSION OPERATIONS

Anti-roll bar
- link – remove and refit 60.10.02
- remove and refit 60.10.01
- rubbers – remove and refit 60.10.04

Ball joint – remove and refit 60.15.02

Front damper
- bushes – remove and refit 60.30.07
- remove and refit 60.30.02

Front hub
- bearing end-float – check and adjust 60.25.13
- bearings – remove and refit 60.25.14
- oil seal – remove and refit 60.25.15
- overhaul 60.25.07/08
- remove and refit 60.25.01/02
- stub axle – remove and refit 60.25.22
- wheel studs – remove and refit 60.25.29

Front road spring – remove and refit 60.20.01

Trunnion
- overhaul 60.15.13
- remove and refit 60.15.03

Vertical link – remove and refit 60.25.23

Wishbone
- lower – remove and refit 60.35.03
- upper – remove and refit 60.35.01

ANTI-ROLL BAR

– Remove and refit **60.10.01**

Removing

1. Remove nyloc nut and plain washer securing anti-roll bar link to left and right hand lower wishbones.
2. Release anti-roll bar links from wishbone.
3. Remove the nyloc nuts and plain washers securing anti-roll bar 'U' bolts to left and right hand chassis brackets.
4. Withdraw 'U' bolts and bush housing bottom halves.
5. Withdraw anti-roll bar.

Refitting

6. Reverse instructions 1 to 5.

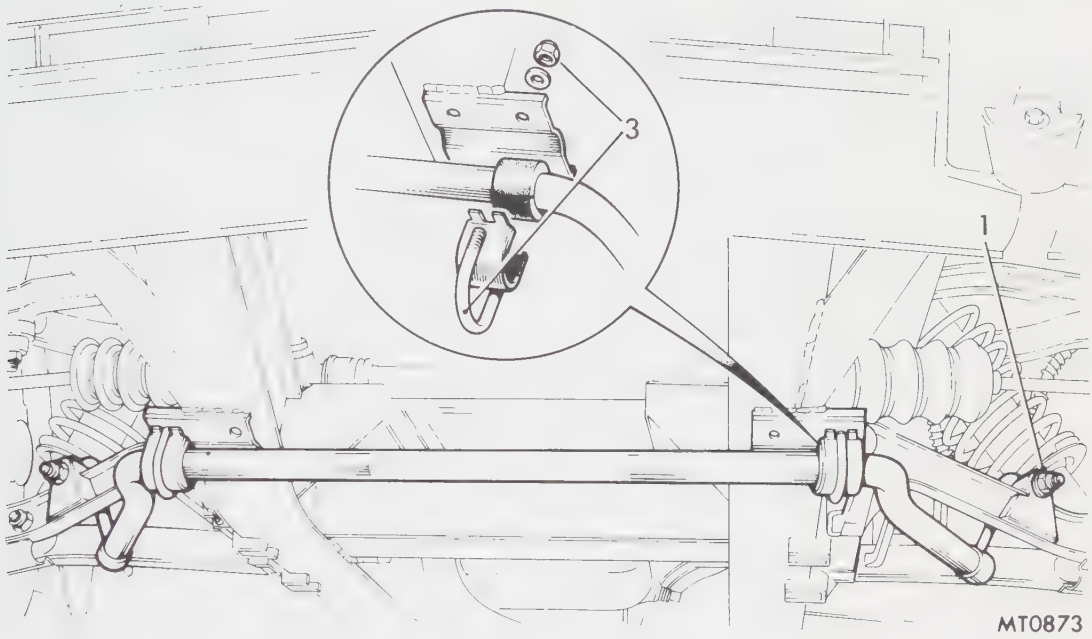

ANTI-ROLL BAR LINK

– Remove and refit **60.10.02**

Removing

1. Remove the nyloc nut and plain washer securing the anti-roll bar link to the lower wishbone.
2. Withdraw the anti-roll bar link from the lower wishbone.
3. Remove the nyloc nut and plain washer securing the lower end of link to the anti-roll bar.
4. Withdraw the anti-roll bar link.

Refitting

5. Reverse instructions 1 to 4.

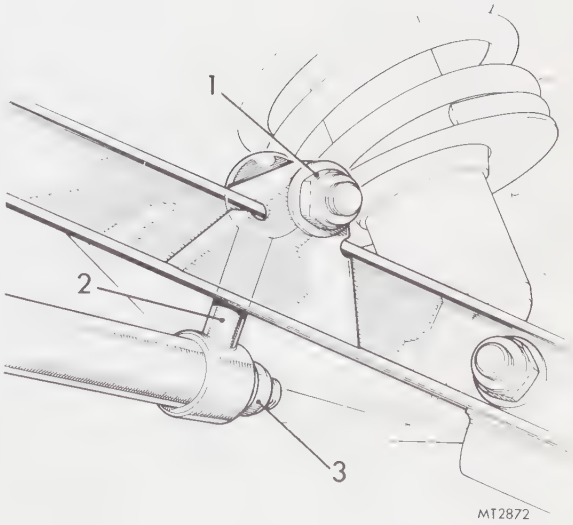

ANTI-ROLL BAR RUBBERS

– Remove and refit **60.10.04**

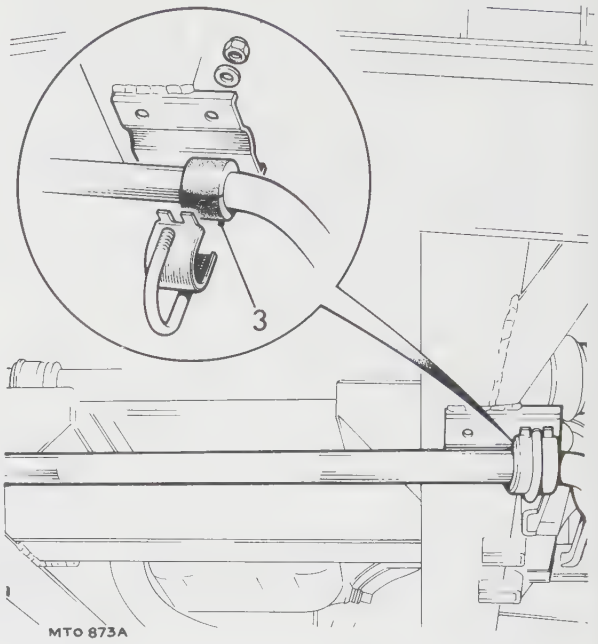

Removing

1. Remove anti-roll bar. 60.10.01.
2. Remove the anti-roll bar links from anti-roll bar.
3. Slide off anti-roll bar bushes.

Refitting

4. Slide new bushes into position on anti-roll bar.
5. Fit the anti-roll links to the anti-roll bar.
6. Connect the anti-roll bar link to the lower wishbone.
7. Offer up the anti-roll bar to its mounting brackets and align the rubber bushes.
8. Fit the bush housings and 'U' bolts.
9. Secure the 'U' bolts with nyloc nuts and plain washers.

BALL JOINT

– Remove and refit **60.15.02**

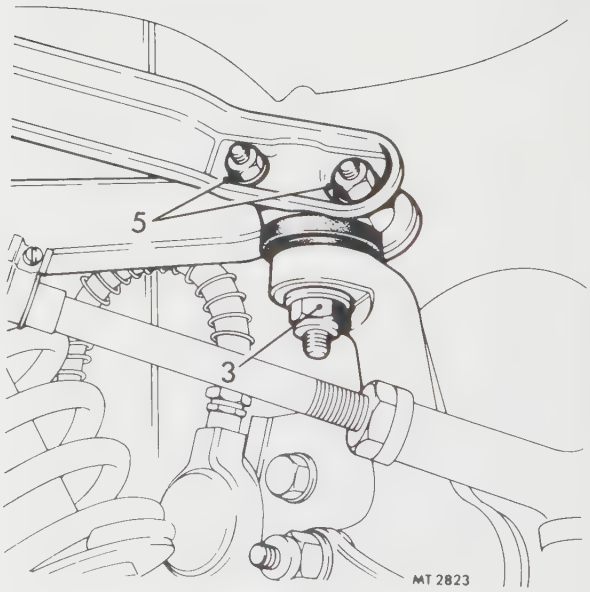

Removing

1. Jack up car and support chassis on stand(s).
2. Remove road wheel.
3. Remove nyloc nut and plain washer securing ball joint shank to vertical links.
4. Release ball joint shank from vertical link.
5. Remove the two bolts and nuts securing ball joint to upper wishbone.
6. Withdraw ball joint.

Refitting

7. Reverse instructions 1 to 6.

TRUNNION

– Remove and refit 60.15.03

Removing

1. Jack up the car and support the chassis on stand(s).
2. Remove the road wheel.
3. Remove the hub. 60.25.01/02.
4. Remove the bolt securing the steering arm and disc shield to the vertical link.
5. Slacken the nut and lift off the disc shield.
6. Remove the nut and bolt securing the trunnion to the lower wishbone.
7. Slacken the nut and bolt securing the shock absorber to the lower wishbone.
8. Detach the trunnion from the lower wishbone and unscrew the trunnion.

Refitting

9. Reverse instructions 1 to 8, ensuring that the trunnion outer washers and dust seals are correctly positioned.
10. Lubricate the trunnion, page 09-1.

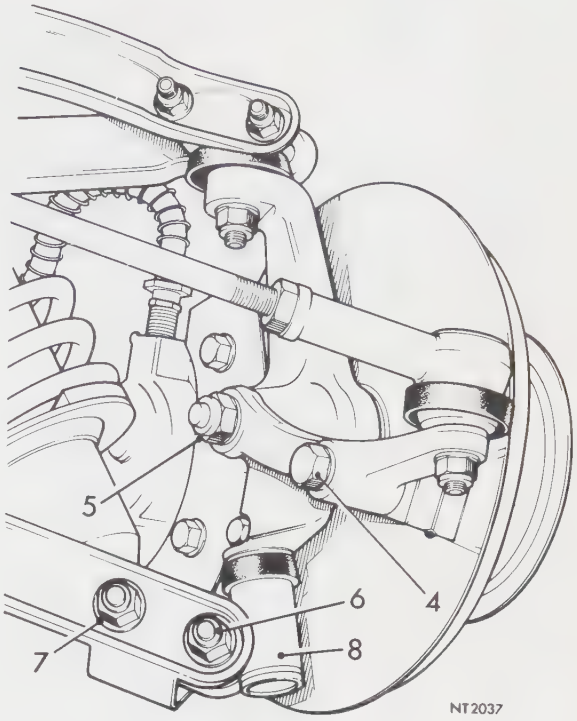

TRUNNION

– Overhaul 60.15.13

Dismantling

1. Remove the trunnion. 60.15.03.
2. Remove the two washers.
3. Extract the two dust seals.
4. Press out the distance piece.
5. Extract the two nylon bearings and remove the two washers.

Reassembling

6. Lubricate the nylon bearings with a zinc base grease.
7. Reverse instructions 1 to 5.

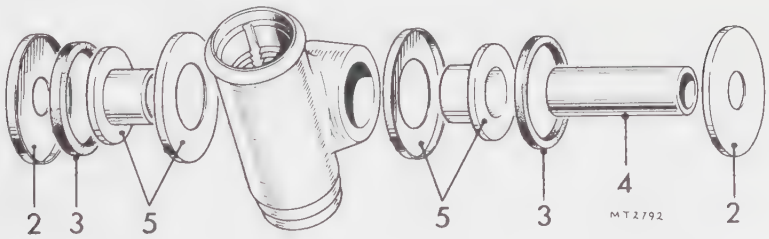

FRONT ROAD SPRING

– Remove and refit **60.20.01**

Service tools: S4221A, S4221A-5

[CAUTION: Please read the instructions thoroughly before you attempt spring repairs. If you lack the necessary skills or tools we suggest you leave this work to an Authorized Dealer, or other qualified shop. Severe personal injury may result if you undertake disassembly without a proper spring compressing tool.]

Removing

1. Jack up the car and support chassis on stand(s).
2. Remove front wheel.
3. Slacken the bolt and nut securing the steering trunnion to lower wishbone.
4. Remove the bolt, nut and washer securing bottom of damper to lower wishbone.
5. Remove three nyloc nuts and washers securing road spring pad to bracket.
6. Release damper from lower wishbone and withdraw damper and spring assembly complete.
7. Using Tool S4221A with adaptor S4221A-5 compress the road spring until the upper mounting flange is released of spring loading.
8. Remove locknut and nut securing damper rod to mounting flange.
9. Withdraw mounting rubbers, mounting rubber seats and mounting flange from damper rod.
10. Release spring tension and remove tool.
11. Remove spring from damper.

Refitting

12. Fully extend damper rod and locate road spring on damper flange.
13. Using tool S4221A with adaptor S4221A-5 compress road spring until the free end of the spring is below the damper rod end.
14. Fit the mounting rubbers, mounting rubber seats and mounting flange.
15. Fit and tighten nut and locknut.
16. Remove spring and damper from the tool.
17. Offer up spring and damper assembly to vehicle and engage mounting flange studs in upper bracket.
18. Fit plain washers and nyloc nuts to mounting flange studs. Tighten nuts.
19. Engage bottom end of damper in lower wishbone and secure with bolt, washer and nut.
20. Tighten bolt and nut securing lower swivel to wishbone.
21. Fit road wheel and remove jack.

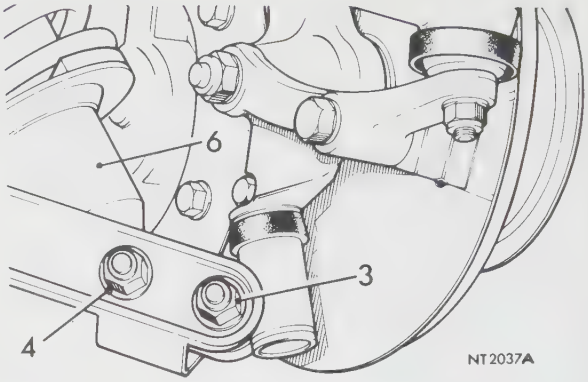

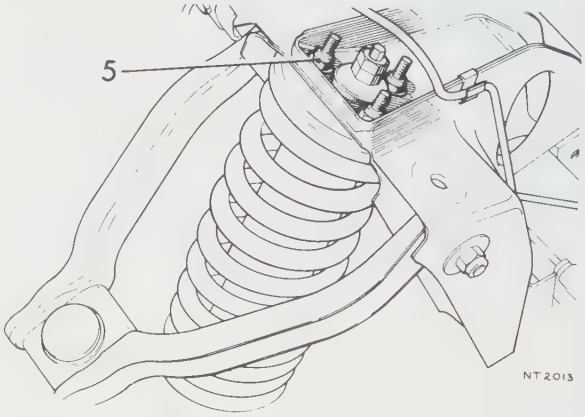

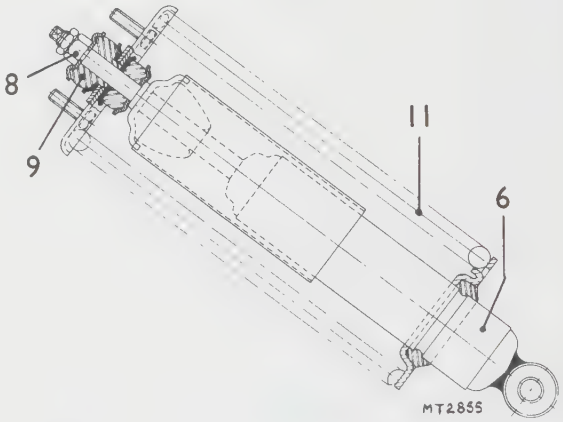

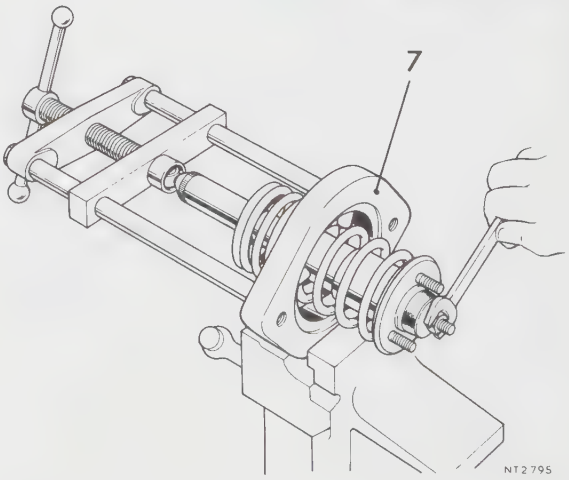

FRONT HUB

– Remove and refit 60.25.01/02

Removing

1. Jack up car and support chassis on stand(s).
2. Remove front wheel.
3. Remove the two bolts and spring washers securing brake caliper to vertical link.
4. Remove caliper shield and withdraw caliper from vertical link and disc. Ensure that weight of caliper is not supported by brake hose.
5. Remove hub cap.
6. Remove split pin, slotted nut and washer from stub axle.
7. Withdraw front hub complete with bearings and oil seal.

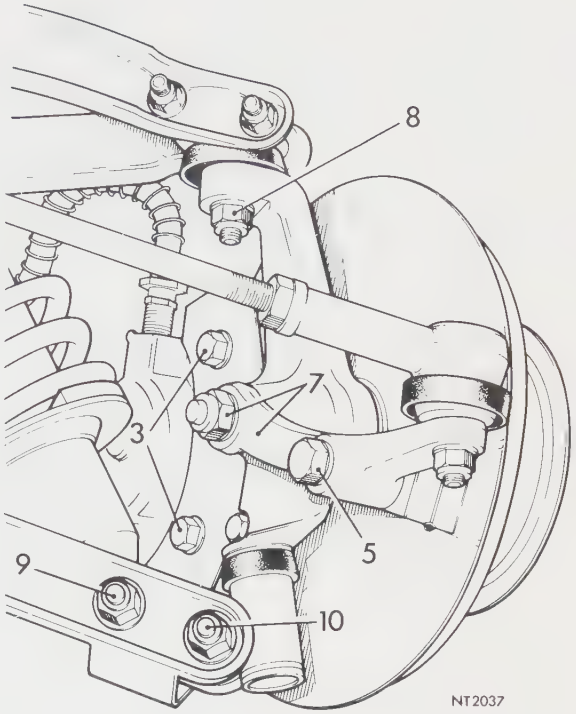

Refitting

8. Partially pack hub with fresh grease.
9. Locate the oil seal in the hub and enter the hub and bearings on the stub axle.
10. Fit the washer and slotted nut to the stub axle.
11. Tighten the slotted nut to obtain hub end-float of 0.002 to 0.005 in (0.0508 to 0.1270 mm).
12. Secure the slotted nut with a new split pin.
13. Partially fill the hub cap with fresh grease and fit the cap to the hub.
14. Fit the caliper and shield to the vertical link and secure with two bolts and spring washers.
15. Fit the road wheel and remove the stand(s).

NOTE: If a new oil seal is fitted, it may settle in service and require re-adjustment of the hub end float. See 60.25.13.

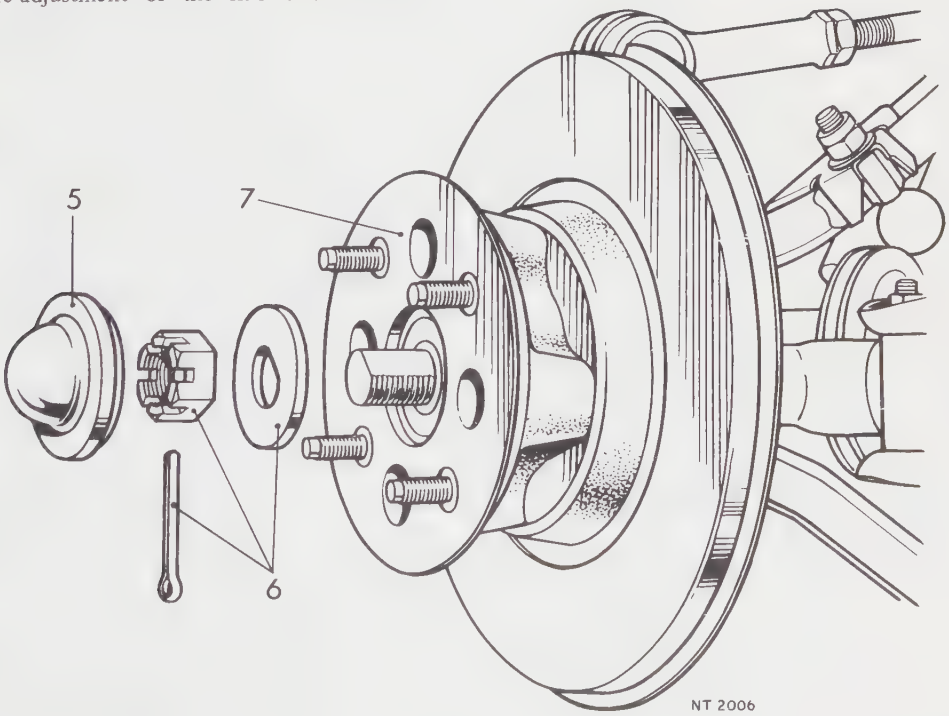

FRONT HUB

– Overhaul **60.25.07/08**

Dismantling

1. Remove the front hub. 60.25.01/02.
2. Withdraw the outer bearing.
3. Withdraw the oil seal, inner bearing shield and inner bearing.
4. Carefully and evenly extract the inner and outer bearing tracks. The removal of the bearing tracks is not advised unless renewal is intended.
5. Thoroughly clean all components.

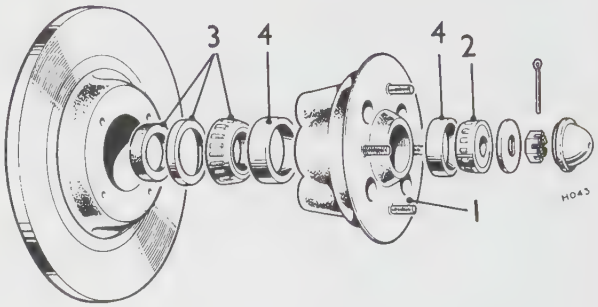

Reassembling

6. Examine all components and renew as necessary.
7. Fit the inner and outer bearing tracks to the hub.
8. Partially fill the hub with fresh grease and fit the inner bearing.
9. Fit the inner bearing shield.
10. Lubricate the new felt seal and enter the seal in the hub.
11. Fit the outer bearing.
12. Install the hub on the stub axle. 60.25.01/02.

FRONT HUB BEARING END-FLOAT

– Check and adjust **60.25.13**

Checking

1. Jack up the car and remove the front wheel.
2. Remove the front brake pads.
3. Check hub bearing end-float. A correctly adjusted hub will have end-float within 0.002 to 0.005 in (0.0508 to 0.1270 mm). A dial gauge can be used for checking purposes.

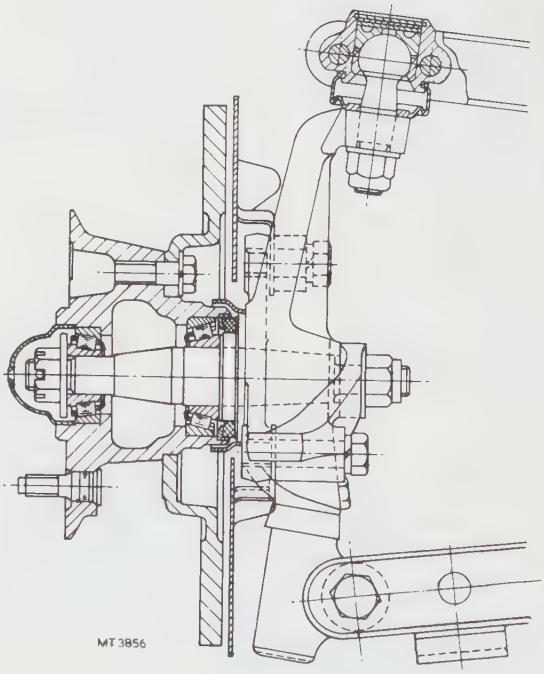

Adjusting

4. Remove the hub cap.
5. Remove the split pin from the slotted nut at the end of the stub axle.
6. Tighten or slacken the slotted nut as necessary to obtain the required end-float (item 3 above).
7. Fit a new split pin.
8. Clean the hub cap and partially fill with fresh grease.
9. Fit the hub cap.
10. Fit the front brake pads.
11. Fit the front wheel and remove the jack.

FRONT HUB BEARINGS

– Remove and refit **60.25.14**

As operation 60.25.07.

FRONT HUB OIL SEAL

– Remove and refit **60.25.15**

Removing

1. Remove the front hub. 60.25.01/02.
2. Withdraw the oil seal.

Refitting

3. Partially pack the hub with fresh grease.
4. Lubricate the new hub seal and enter the seal in the hub.
5. Fit the hub to the stub axle. 60.25.01/02.

NOTE: A new oil seal may settle in service and require re-adjustment of the hub end-float.

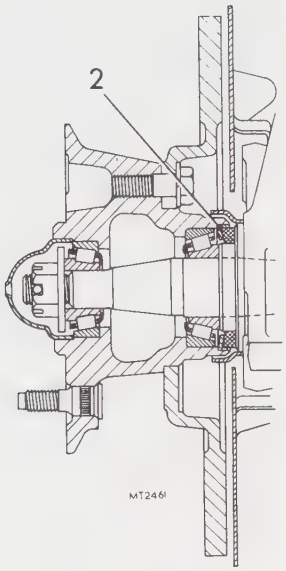

FRONT HUB STUB AXLE

– Remove and refit **60.25.22**

Removing

1. Remove the vertical link. 60.25.23.
2. Press out the stub axle from the vertical link.

Refitting

3. Reverse instructions 1 and 2.
4. Fit the vertical link and hub assembly. 60.25.23.

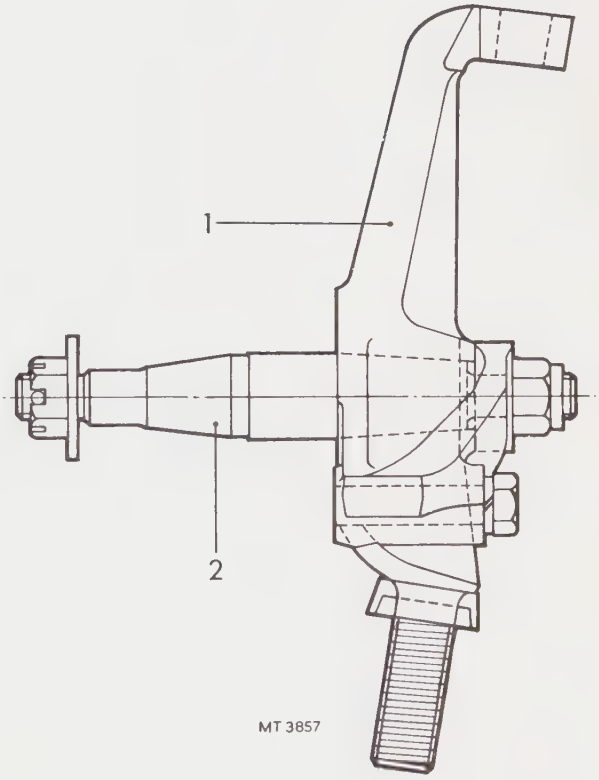

VERTICAL LINK

– Remove and refit 60.25.23

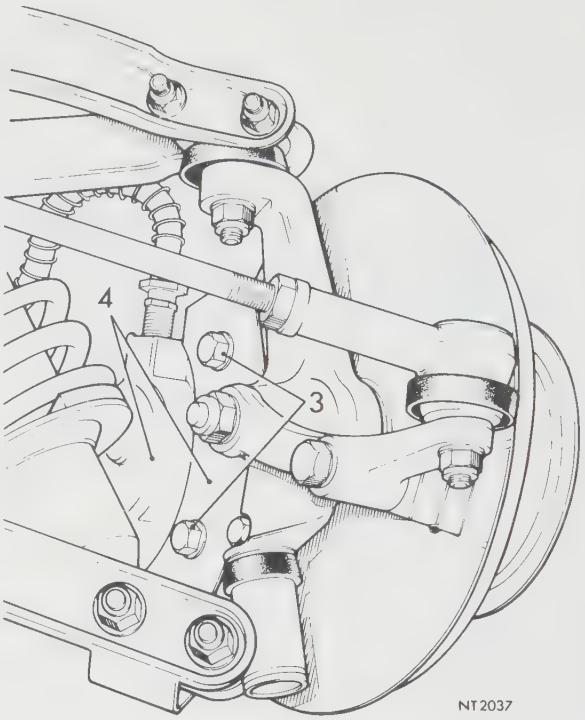

Removing

1. Jack up the car and support chassis on stand(s).
2. Remove front wheel.
3. Remove two bolts and spring washers securing caliper shield and caliper to vertical link and withdraw shield and caliper. Do not permit caliper to hang suspended by brake hose.
4. Remove hub and disc (items 5-7, 60.25.01/02).
5. Remove the bolt and spring washer securing steering arm and disc shield to vertical link.
6. Remove disc shield.
7. Remove the nyloc nut and plain washer securing steering arm to stub axle and withdraw steering arm.
8. Remove the nyloc nut and plain washer securing upper ball joint to vertical link and release ball shank from vertical link.
9. Slacken the nut and bolt securing bottom end of damper to lower wishbone.
10. Remove the nut, washer and bolt securing lower swivel to lower wishbone.
11. Withdraw vertical link.

Refitting

12. Reverse instructions 1 to 11.

FRONT HUB WHEEL STUDS

– Remove and refit 60.25.29

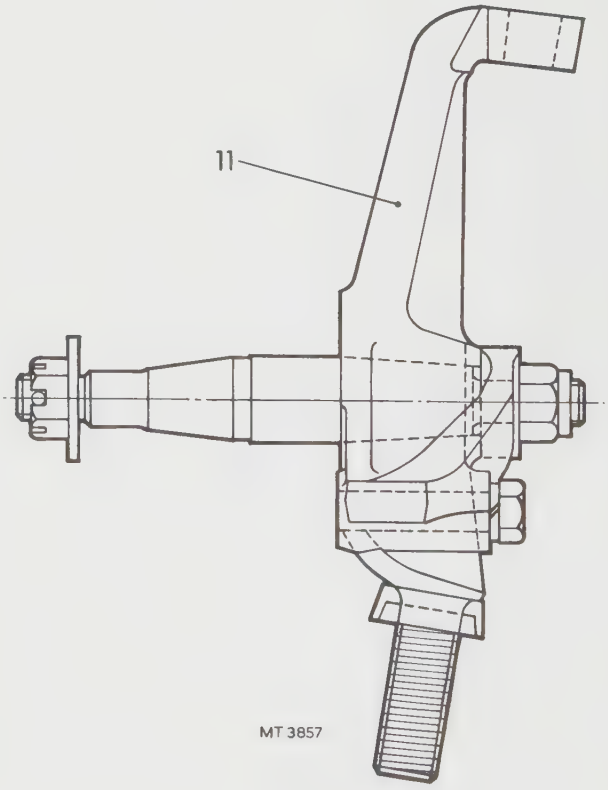

Removing

1. Jack up the car and remove the front wheel.
2. Tap the wheel stud towards the disc.
3 Withdraw the stud. Wheel studs should not be removed except for purposes of renewal.

Refitting

4. Ensure that the mating countersunk faces of both stud and hub are clean.
5. Enter the stud from the rear of the hub flange.
6. Using suitable packing (e.g. a short length of steel tubing) draw the stud into position.
7. Remove the nut and packing.
8. Fit the road wheel and remove the jack.

FRONT DAMPER

– Remove and refit 60.30.02

As operation 60.20.01.

FRONT DAMPER BUSHES

– Remove and refit 60.30.07

1. Remove damper and road spring assembly from the car (items 1 to 6 operation 60.20.01).

Upper mountings – remove and refit

Service Tools. S4221A, S4221A-5

2. Using above tools, release spring load from damper upper mountings.
3. Remove locknut and nut securing damper rod to mounting flange.
4. Withdraw mounting rubbers, mounting rubber seats and mounting flange from damper rod.
5. Prime the damper by holding it vertically in a vice, then extend and compress it to the full limit of travel several times.
6. Fit new mounting rubbers, mounting rubber seats, and mounting flange in order illustrated in operation 60.20.01.
7. Fit and tighten damper rod nut and locknut.
8. Release spring and damper assembly from Service Tool.

Lower bush – remove and refit

9. Press out bush and sleeve from damper eye.
10. Press in new bush and sleeve ensuring both are centralised.
11. Install damper and road spring assembly on car. 60.20.01.

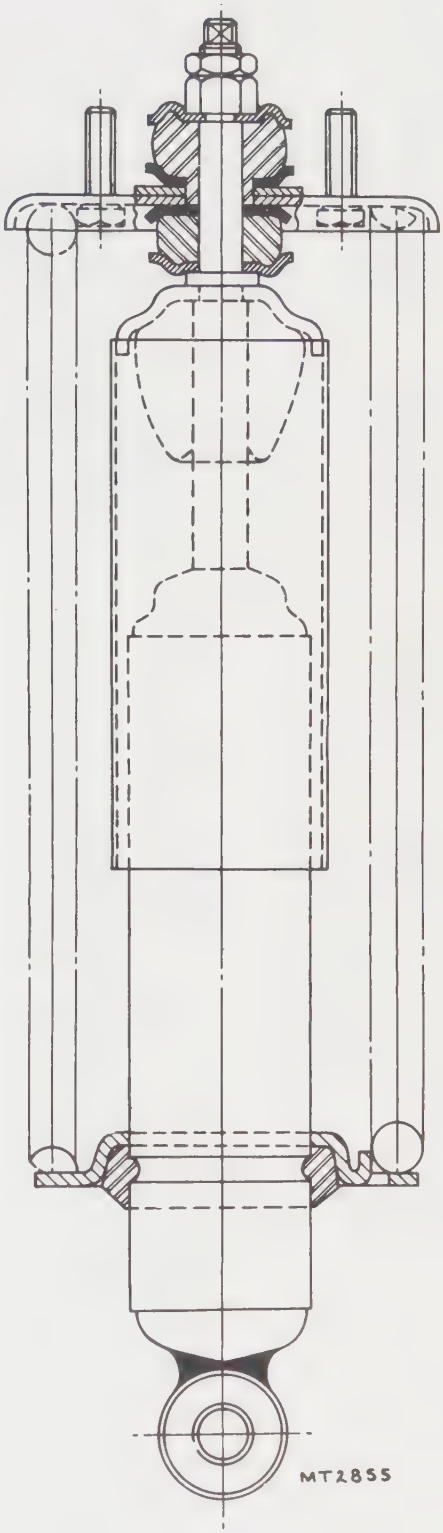

WISHBONE – UPPER

– Remove and refit **60.35.01**

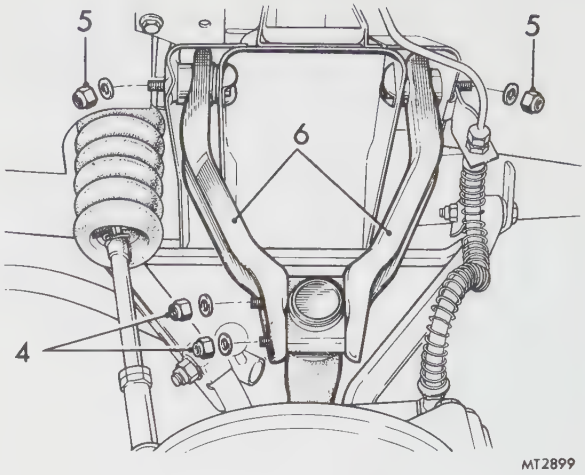

Removing

1. Jack up car and support chassis on stand(s).
2. Remove front wheel.
3. Remove front spring and damper assembly. 60.20.01.
4. Remove two nyloc nuts, plain washers and bolts securing upper ball joint to outer end of wishbone.
5. Remove two nyloc nuts, plain washers and bolts securing inner ends of wishbone to bracket.
6. Withdraw upper wishbone.

Refitting

7. Reverse instructions 1 to 6. Do not tighten wishbone inner fulcrum bolts until car is static laden.
8. Fit front wheel and remove stand(s).
9. Tighten wishbone inner fulcrum bolts.

WISHBONE – LOWER

– Remove and refit **60.35.03**

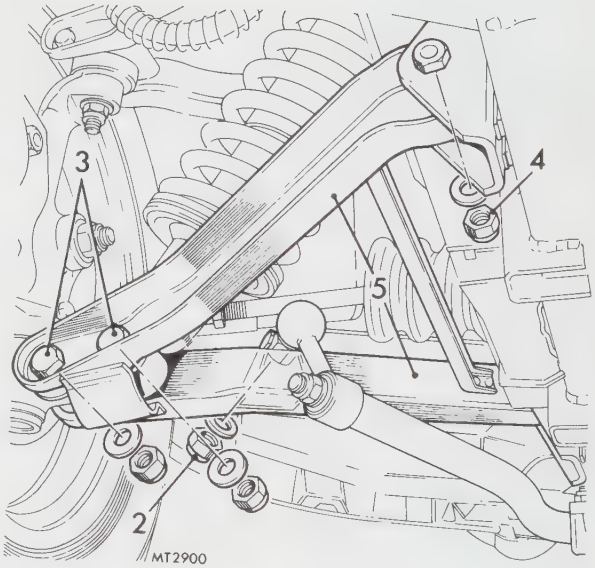

Removing

1. Jack up car, support chassis on stand(s) and remove the front wheel.
2. Disconnect anti-roll bar link from lower wishbone.
3. Remove two bolts and nyloc nuts securing bottom end of damper and lower swivel bearing to outer end of lower wishbone.
4. Remove two nyloc nuts and bolts securing inner ends of wishbone to brackets.
5. Withdraw lower wishbone.

Refitting

6. Reverse instructions 1 to 5. Do not tighten wishbone inner fulcrum bolts until car is static laden.
7 Fit front wheel and remove stand(s).
8 Tighten wishbone inner fulcrum bolts.

REAR SUSPENSION OPERATIONS

Radius rod
– bushes – remove and refit 64.35.29
– remove and refit 64.35.28

Rear damper – remove and refit 64.30.01

Rear hub
– remove and refit 64.15.01
– wheel studs – remove and refit 64.15.26

Rear wheel alignment – check and adjust 64.25.17

Road spring
– overhaul 64.20.04
– remove and refit 64.20.01

Vertical link – remove and refit 64.35.03

REAR HUB

– Remove and refit 64.15.01

Service Tool: S109C or S356A

Removing

1. Jack up the car and remove the road wheel.
2. Release the handbrake and remove the brake drum.
3. Remove the nyloc nut and plain washer securing the rear hub to the drive shaft.
4. Using Tool S109C or S356A, withdraw the rear hub.

Refitting

5. Ensure that the mating tapered faces, of the drive shaft and hub are clean.
6. Enter hub on drive shaft, engaging the key in the keyway.
7. Fit the plain washer and a new nyloc nut. Use a tyre lever or similar across the hub studs to apply reverse torque and tighten the nut to 90 to 120 lbf ft (12.4 to 16.6 kgf m).
8. Fit the brake drum.
9. Fit the road wheel and remove the jack.

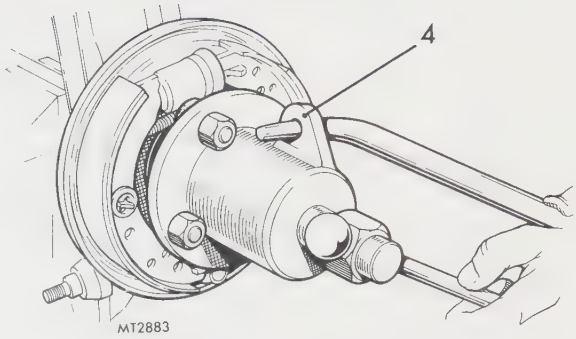

REAR HUB WHEEL STUDS

– Remove and refit 64.15.26

NOTE: Wheel studs should not be removed unless renewal is intended.

Removing

1. Jack up the car and remove the road wheel.
2. Remove the brake drum.
3. Rotate hub until rear face of wheel stud is clear of brake shoe return springs.
4. Tap out wheel stud towards the brake backplate.

Refitting

5. Enter the stud squarely from the rear of the hub flange ensuring that the tapered faces on both hub and studs are clean.
6. Using suitable packing (e.g. a short length of tubing and washers) inserted over the wheel stud draw the stud into position. If new studs are a loose fit in the hub flange, a new hub should be fitted.
7. Fit the brake drum and road wheel and remove the jack.

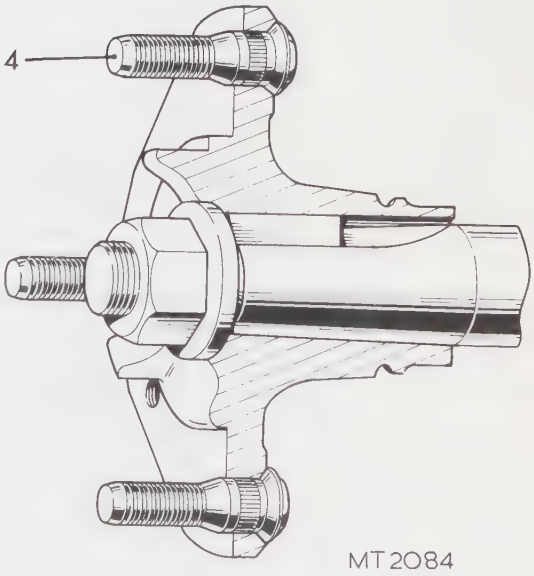

REAR ROAD SPRING

– Remove and refit **64.20.01**

Removing

1. Jack up the car and support the chassis on stands.
2. Remove the road wheels.
3. Remove the two nyloc nuts, plain washers and bolts securing the road spring to the vertical links.
4. Remove the two nyloc nuts and plain washers. Disconnect the lower end of the dampers from the vertical links.
5. Remove the rear squab trim pad – six screws and cup washers.
6. Remove the panel – two bolts.
7. Remove four nyloc nuts securing the spring bracket to the differential casing.
8. Using two nuts, remove the four studs from the differential casing.
9. Ease the spring ends clear of the vertical links and withdraw the spring from the car.

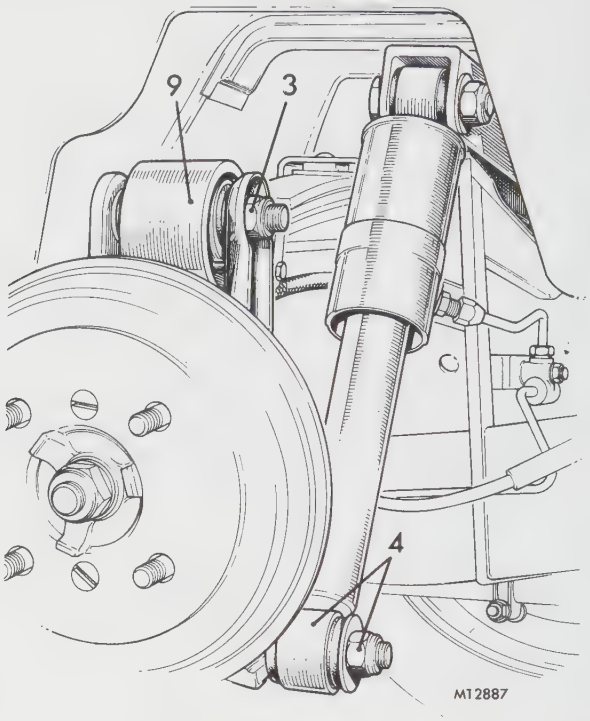

Refitting

10. Slide the spring into position with the spring clips stamped 'FRONT' facing the front of the car and the ground edge at the centre of the main leaf facing rearwards.
11. Locate the spring centre bolt in the recess in the differential casing.
12. Reverse 1 to 8, fit new nyloc nuts if necessary and do not fully tighten bolts (3) until the car is lowered to the ground. Refer to section 06 for tightening torque values.

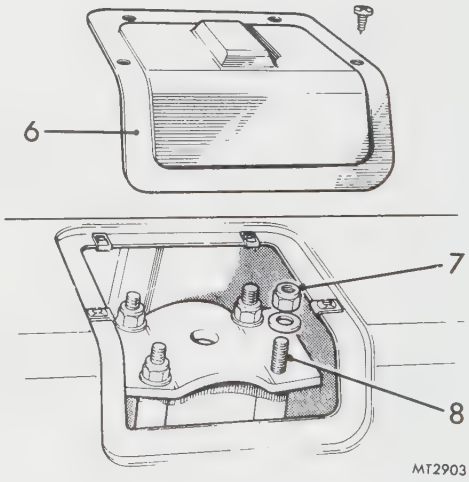

REAR ROAD SPRING

– Overhaul **64.20.04**

Dismantling

1. Remove the spring. 64.20.01.
2. Withdraw the spring plate.
3. Compress the spring in a vice and remove the spring bracket and rubber pad, one nut, bolt, spring washer and spacer. Release the spring from the vice.
4. Remove the four nuts, bolts and washers from the spring clips.
5. Lift off the top three leaves.
6. Slightly bend the leg of each spring clip on the safety leaf and withdraw the main leaf.

Reassembling

7. Clean the spring leaves and lubricate with graphite grease.
8. Insert the main leaf into the safety leaf with the ground edge at the centre of the main leaf facing the plain, unstamped legs of the spring clips, i.e. towards the rear of the vehicle when the spring is fitted.
9. Reverse 1 to 5, ensuring that all rubber buttons are correctly located in the recessed tips of the spring leaves.

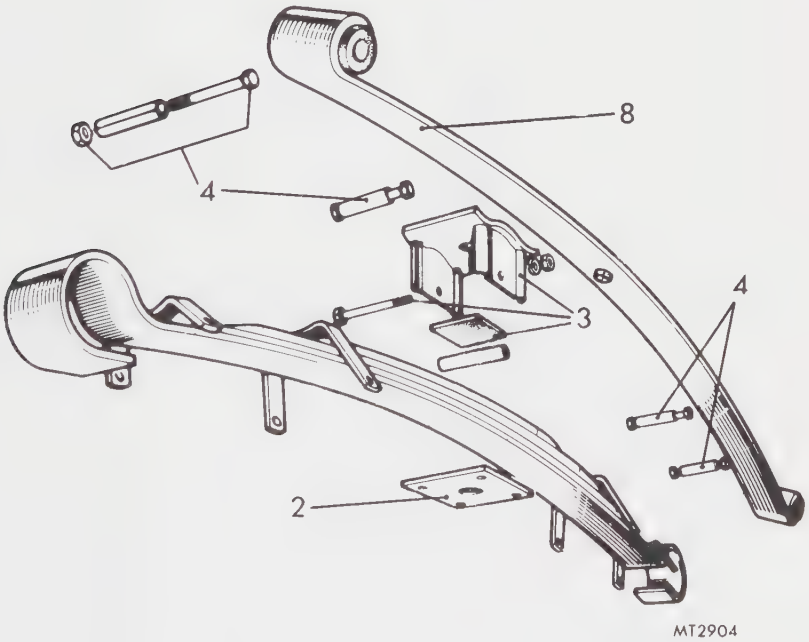

REAR WHEEL ALIGNMENT

– Check and adjust **64.25.17**

Checking

Rear Suspension Data

Kerb condition:
- Camber . . . . . 1° negative ±1°
- Toe-out . . . . . $\frac{1}{32}$ in – $\frac{3}{32}$ in (0.79 – 2.38 mm)

Laden condition (2 up):
- Camber . . . . . 3.3/4° negative ±1°
- Toe-in . . . . . 0 in – $\frac{1}{16}$ in (0 to 1. 59 mm)

Camber. No provision is made for adjustment to camber angle. Camber angles found to be outside the above limits are generally indicative of a weak or incorrectly set spring, or wear in the vertical link bushes.

Toe-in/Toe-out. Rear wheel toe-in/toe-out dimensions vary as given according to the load condition of the vehicle. In addition rear wheel alignment is also influenced by the condition of the rear spring and wear factors in the vertical link linkage. It is important therefore before altering rear wheel alignment, that the causes necessitating adjustment are understood.

Adjusting

1. Locate car on level ground.
2. Using suitable equipment, check for alignment.
3. Adjust as necessary by adding to or removing from the shims fitted between the radius rod front brackets and the body. Add shims to increase toe-out remove shims to reduce toe-out.
4. If pivot bracket nuts are disturbed they should be re-tightened to 24 to 32 lbf ft (3.3 to 4.4 kgf m).
   In contrast to front wheel track adjustment where alteration is made equally to both tie-rods to maintain balanced steering lock angles, adjustment to rear wheel track is individual to either wheel and is determined with alignment with its respective front wheel to which it has a tolerance of 0 to $\frac{1}{32}$ in (0 to 0.79 mm) toe-in – kerb condition or $\frac{1}{64}$ in – $\frac{3}{64}$ in (0.39 to 1.19 mm) toe-out – laden condition (2 up).

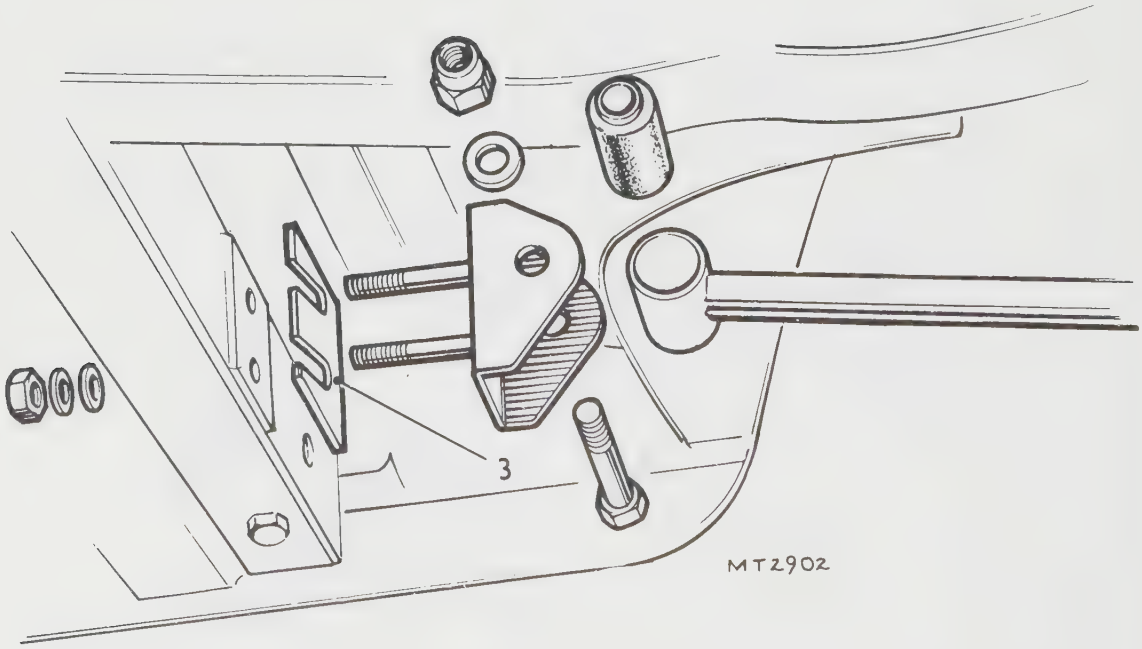

REAR DAMPER

– Remove and refit 64.30.01

Removing

1. Jack up the car and support the chassis on stands.
2. Remove the rear wheel.
3. Remove the nyloc nut and plain washer securing the lower end of the damper to the vertical link.
4. Remove the nyloc nut, plain washer and bolt securing the upper end of damper to the chassis.
5. Withdraw the damper.

Refitting

6. Reverse instructions 1 to 5, fitting new nyloc nuts if necessary. Refer to section 06 for tightening torque values.

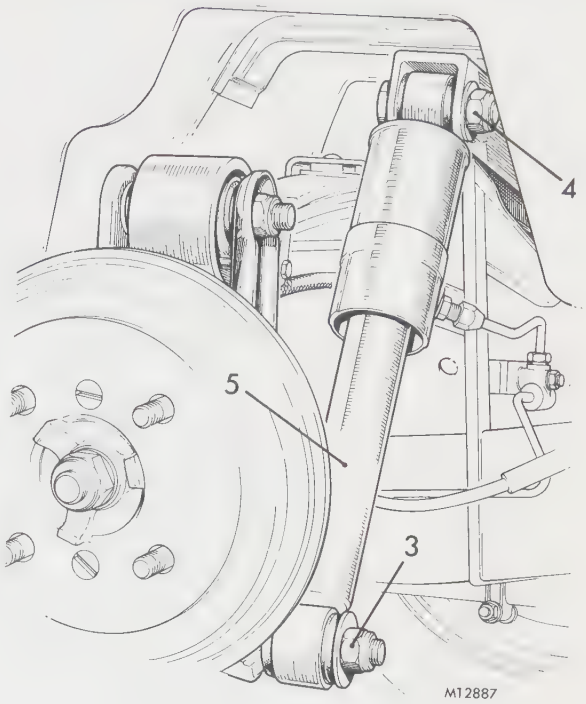

VERTICAL LINK

– Remove and refit 64.35.03

Removing

1. Jack up the car and support the chassis on stands.
2. Remove the rear wheel.
3. Remove the nyloc nut, plain washer and bolt securing the radius rod to the bracket on the vertical link. Detach the radius rod from the vertical link.
4. Remove the nyloc nut and plain washer securing lower end of damper to vertical link. Detach damper.
5. Remove the nyloc nut, plain washer and bolt securing the upper end of the vertical link to the road spring.
6. Remove the nyloc nut, plain washer and bolt securing the vertical link to the inner hub.
7. Remove the vertical link.

Refitting

8. Offer up the vertical link to the car and engage the lower end of the link in the damper bush.
9. Ensure inner hub pivot bush seals and covers are intact and in position and fit the vertical link to the inner hub. Secure in position with bolt, plain washer and nyloc nut.
10. Fit bolt, plain washer and nyloc nut to upper end of vertical link and road spring. Do not fully tighten bolts until the car is lowered to the ground.
11. Fit plain washer and nyloc nut to secure the damper to the vertical link.
12. Connect the radius rod to the vertical link bracket and secure with bolt, plain washer and nyloc nut.
13. Fit the road wheel.
14. Remove the chassis stands.

NOTE: Fit new nyloc nuts if necessary. Refer to section 06 for tightening torque values.

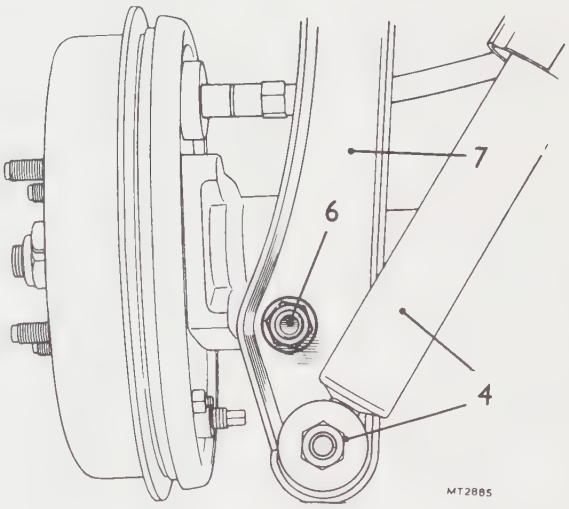

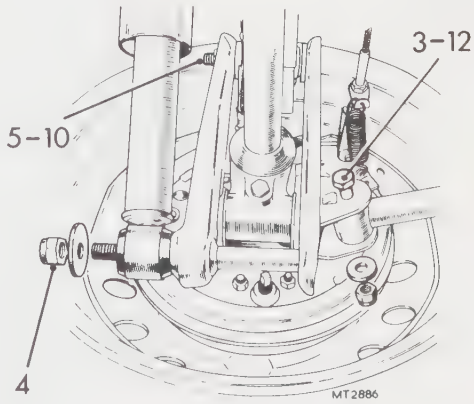

RADIUS ROD

– Remove and refit **64.35.28**

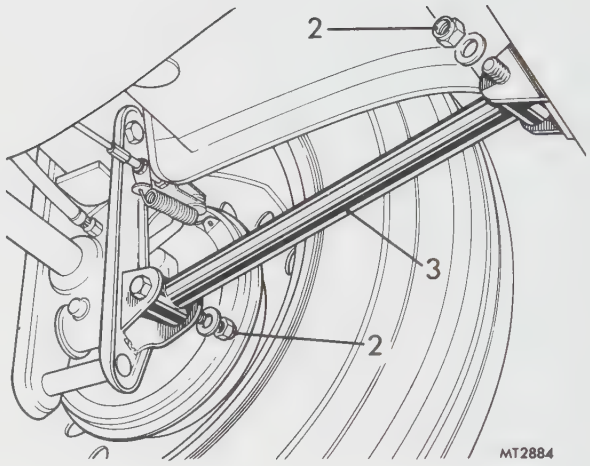

Removing

1. Jack up the car, support the chassis on stands and remove the rear wheel.
2. Remove the nyloc nuts, plain washers and bolts securing the radius rod ends to the body and the vertical link.
3. Withdraw the radius rod.

Refitting

4. Reverse instructions 1 to 3, fitting new nyloc nuts if necessary. Tightening bolts to 24 to 32 lbf ft (3.3 to 4.4 kgf m).

RADIUS ROD BUSHES

– Remove and refit **64.35.29**

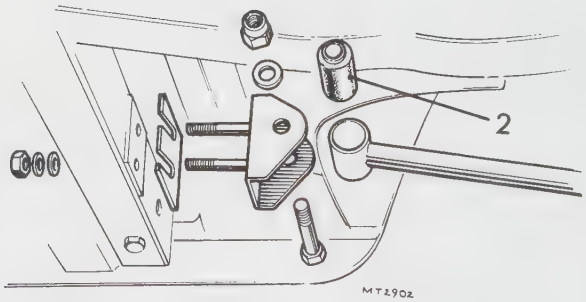

Removing

1. Remove radius rod. 64.35.28.
2. Press out bushes.

Refitting

3. Press in new bushes.
4. Fit the radius rod to the car. 64.35.28.

BRAKE OPERATIONS

Brake hose
- front – remove and refit 70.15.02/03
- rear – remove and refit 70.15.17/18

Brake pedal – remove and refit 70.35.01

Brakes
- adjust 70.25.03
- bleed 70.25.02

Connectors
- 2-way – remove and refit 70.15.32
- 3-way – remove and refit 70.15.34
- 4-way – remove and refit 70.15.35

Front brake
- brake pads – remove and refit 70.40.02
- caliper – remove and refit 70.55.02
- caliper seals – remove and refit 70.55.13
- disc – remove and refit 70.10.10
- disc shield – remove and refit 70.10.18

Hand brake
- cables – adjust 70.35.10
- cables – remove and refit 70.35.16
- compensator – remove and refit 70.35.11
- lever – remove and refit 70.35.08
- pawl and ratchet – remove and refit 70.35.09
- relay lever – remove and refit 70.35.22

Hydraulic pipes – remove and refit 70.20.01/58

P.D.W.A. unit
- remove and refit 70.15.36

Rear brake
- adjust 70.25.03
- backplate – remove and refit 70.10.26
- brake adjuster – remove and refit 70.40.17
- brake drum – remove and refit 70.10.03
- brake shoes – remove and refit 70.40.03
- wheel cylinder – overhaul 70.60.26
- wheel cylinder – remove and refit 70.60.18

Master cylinder
- overhaul 70.30.02
- remove and refit 70.30.01
- tandem type – overhaul 70.30.09
- tandem type – remove and refit 70.30.08

REAR BRAKE DRUM

– Remove and refit **70.10.03**

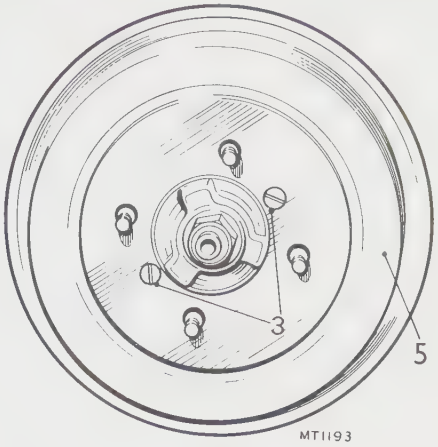

Removing

1. Jack up the car and support the chassis on stands.
2. Remove the rear wheel.
3. Remove two countersunk screws securing the rear brake drum to the hub.
4. Release the hand brake.
5. Withdraw the brake drum.

Refitting

6. Reverse instructions 1 to 5.

FRONT DISC

– Remove and refit **70.10.10**

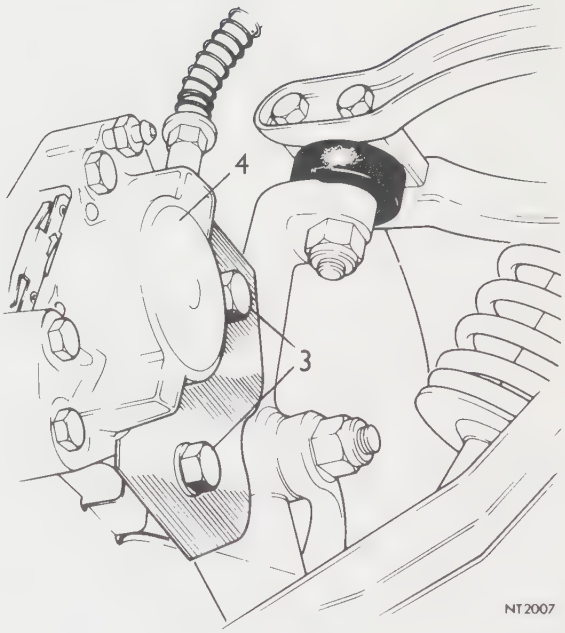

Removing

1. Jack up the car and support the chassis on stands.
2. Remove the front wheel.
3. Remove two bolts securing the caliper shield and caliper to the vertical link.
4. Withdraw the caliper ensuring that strain is not imposed on the brake hose.
5. Remove the front hub. 60.25.01.
6. Remove four bolts and spring washers securing the disc to the front hub.
7. Withdraw the disc.

Refitting

8. Offer up the disc to the front hub ensuring that the mating faces are clean.
9. Fit and tighten the four spring washers and bolts.
10. Locate the felt oil seal in the hub.
11. Fit the hub and disc to the stub axle.
12. Fit the caliper and shield to the vertical link.
13. Fit the road wheel and remove the chassis stands.

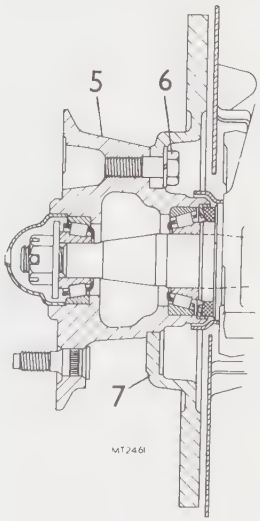

FRONT DISC SHIELD

– Remove and refit **70.10.18**

Removing

1. Jack up the car and support the chassis on stands.
2. Remove the front wheel.
3. Remove the brake caliper and the front hub. 60.25.01.
4. Slacken the nyloc nut securing the steering arm to the stub axle.
5. Remove the bolt and spring washer securing the steering arm to the vertical link.
6. Withdraw the disc shield.

Refitting

7. Reverse instructions 1 to 6.

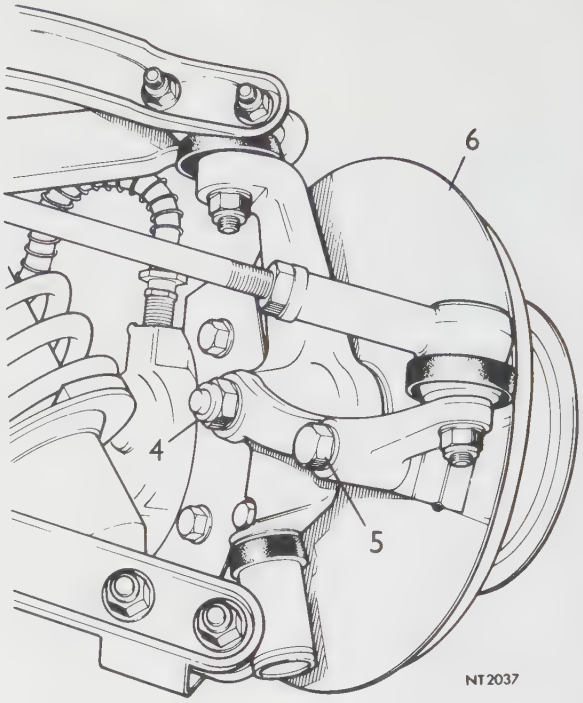

REAR BACKPLATE

– Remove and refit **70.10.26**

Removing

1. Jack up the car and support the chassis on stands.
2. Remove the rear wheel.
3. Remove the rear brake drum and hub. 64.15.01.
4. Detach the hand brake cable return spring from the bracket on the backplate.
5. Remove the clevis pin securing the hand brake cable to the brake shoe operating lever.
6. Remove the rear flexible brake hose.
7. Straighten tabs on locking plates securing the backplate bolts.
8. Remove the backplate securing bolts.
9. Withdraw the backplate and bearing shield.

Refitting

10. Reverse instructions 1 to 9.
11. Bleed the brakes.

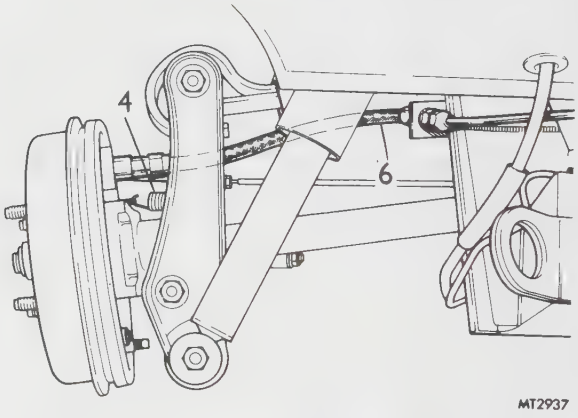

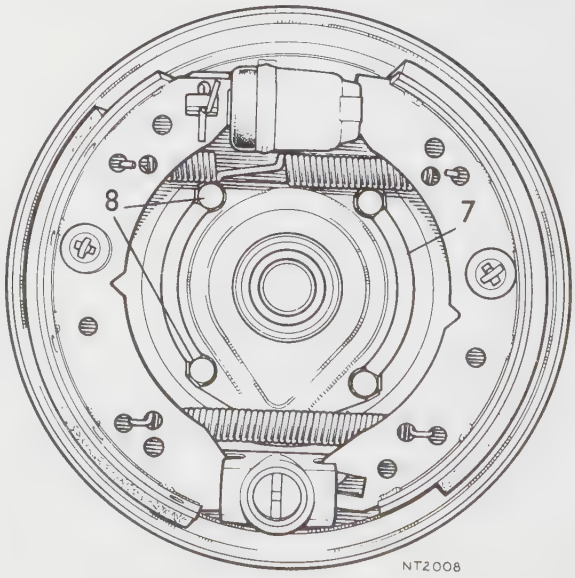

BRAKE HOSE – FRONT

– Remove and refit

Left hand	**70.15.02**
Right hand	**70.15.03**

Removing

1. Disconnect the brake pipe from the inboard end of the flexible hose.
2. Using two spanners remove the nut and washer securing the inboard end of the flexible hose to the front suspension bracket.
3. Withdraw the inboard end of the flexible hose from the suspension bracket.
4. Unscrew the outboard end of the flexible hose from the brake caliper.

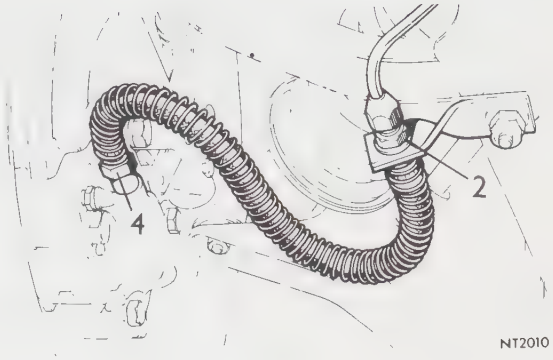

Refitting

5. Reverse instructions 1 to 4, ensure that the hose is neither kinked nor twisted when installed.
6. Bleed the brakes.

BRAKE HOSE – REAR

– Remove and refit

Left hand	**70.15.17**
Right hand	**70.15.18**

Removing

1. Disconnect the union and brake pipe from the inboard end of the flexible hose.
2. Using two spanners remove the nut and washer securing the flexible hose to the chassis bracket.
3. Withdraw inboard end of hose from the chassis bracket.
4. Unscrew the outboard end of the hose from the brake backplate.

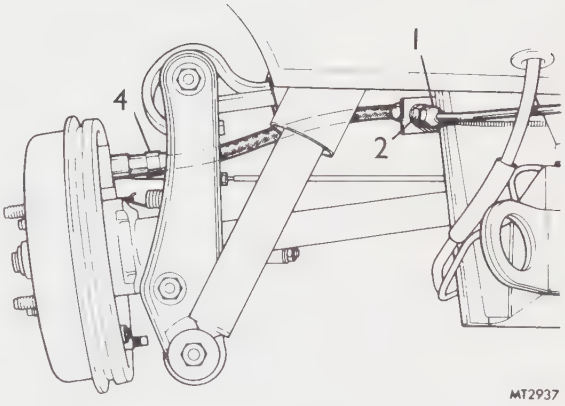

Refitting

5. Reverse instructions 1 to 4. Ensure that the hose is neither kinked nor twisted when installed.
6. Bleed the brakes.

CONNECTOR – 2-WAY

– Remove and refit **70.15.32**

Removing

1. Disconnect the unions and brake pipes from the connector.
2. Withdraw the connector.

Refitting

3. Reverse instructions 1 and 2.
4. Bleed the brakes.

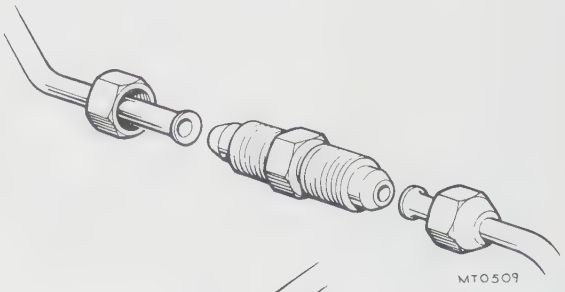

CONNECTOR

– Remove and refit

3-way	**70.15.34**
4-way	**70.15.35**

Removing

1. Disconnect the unions and brake pipes from the connector.
2. Remove the nut, spring washer and bolt securing the connector to the chassis.
3. Remove the connector.

Refitting

4. Reverse instructions 1 to 3.
5. Bleed the brakes.

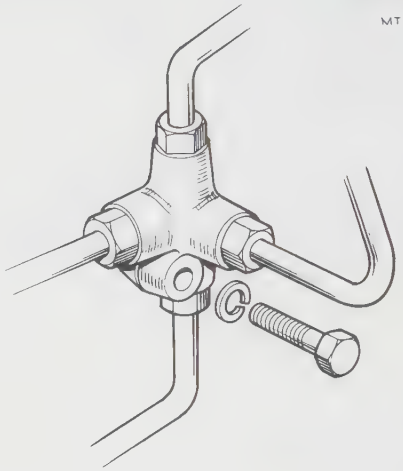

MTO 509

P.D.W.A UNIT

– Remove and refit **70.15.36**

Removing

1. Release the snap connector from P.D.W.A. unit.
2. Disconnect the four brake pipe unions at P.D.W.A. unit.
3. Remove the bolt securing P.D.W.A. unit to car.
4. Withdraw the P.D.W.A. unit.

Refitting

5. Reverse instructions 1 to 4.
6. Bleed the brakes.
7. Check operation of brake circuit warning light and ensure that the P.D.W.A. shuttle is centralised.

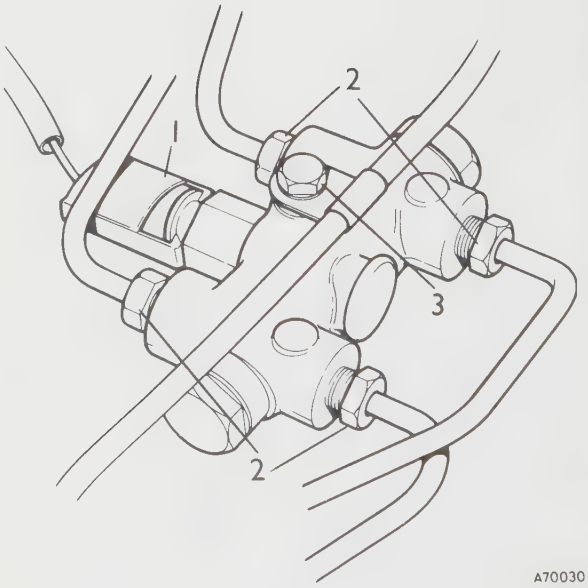

A70030

BRAKE PIPES

– Remove and refit

Pipe – Master cylinder to 4-way connector	70.20.01
Pipe – 4-way connector to L.H. front hose	70.20.02
Pipe – 4-way connector to R.H. front hose	70.20.03
Pipe – 2-way connector to 3-way connector	70.20.14
Pipe – 3-way connector to L.H. rear hose	70.20.15
Pipe – 3-way connector to R.H. rear hose	70.20.16
Pipe – Master cylinder to P.D.W.A. – front brakes	70.20.46
Pipe – Master cylinder to P.D.W.A. – rear brakes	70.20.47
Pipe – P.D.W.A. to 2-way connector	70.20.58

Removing

1. Disconnect unions at both ends of pipe.
2. Release pipe from securing clips (where fitted).

Refitting

3. Reverse instructions 1 and 2.
4. Bleed the brakes.

[CAUTION: Never attempt to straighten a brake pipe that has been bent or dented. Doing this may weaken the pipe structurally. Damaged brake pipes should always be replaced.]

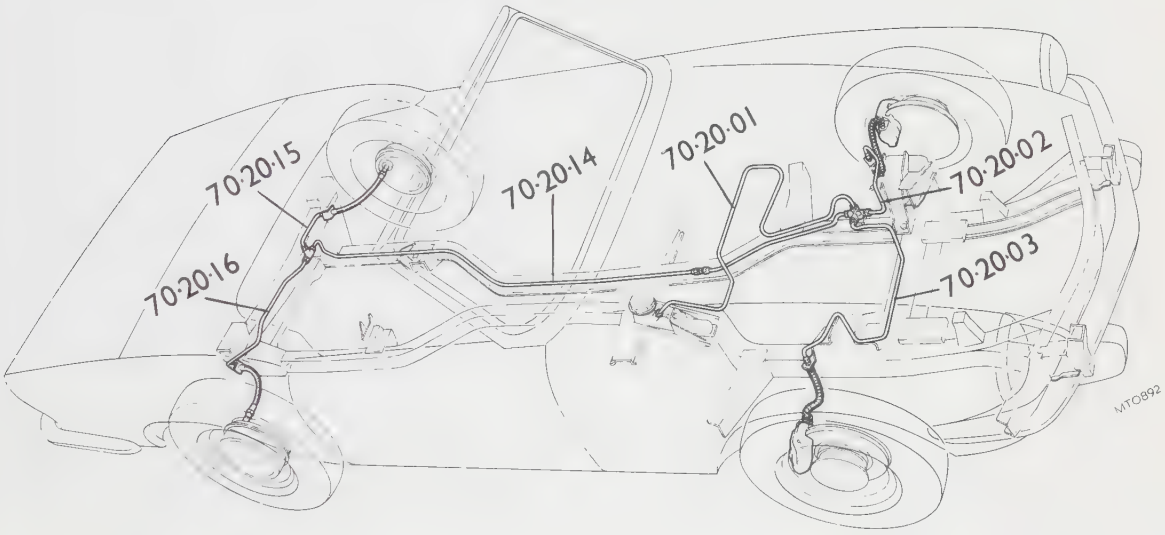

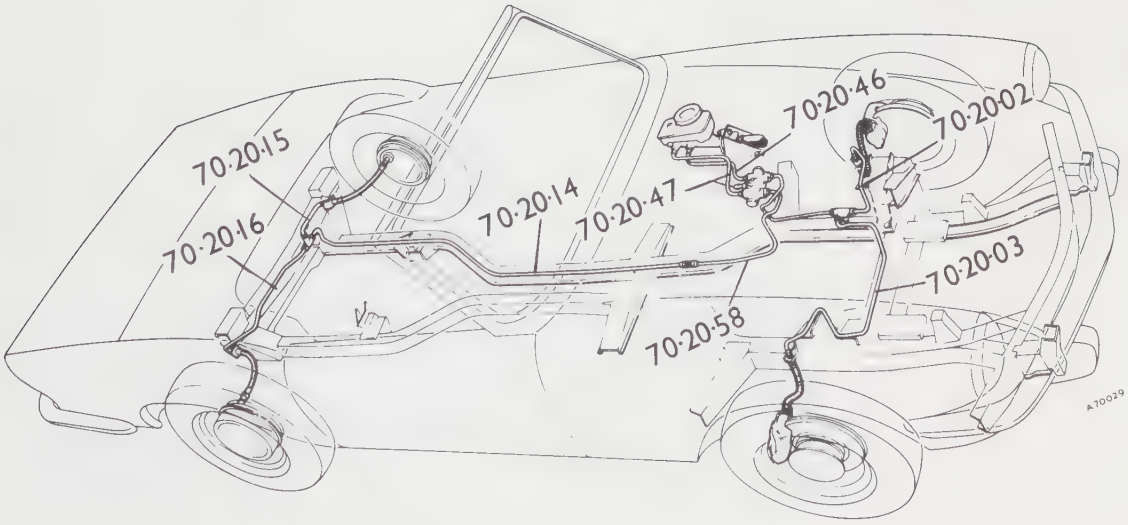

BRAKES

– Bleed 70.25.02

Do not allow the fluid in the reservoir to fall below half capacity. When topping up the reservoir do not use aerated fluid discharged from the system.

1. Release the hand brake.
2. Attach a rubber or plastic tube of suitable bore to the bleed nipple of the front caliper farthest from the master cylinder. Allow the free end of the tube to hang submerged in brake fluid in a transparent container.
3. Slacken the bleed nipple.
4. Depress the brake pedal fully and follow with three rapid strokes. Allow the pedal to return. Repeat until fluid, free from air bubbles issues from the bleed tube.
5. Depress the brake pedal and tighten the bleed nipple.
6. Release the brake pedal and remove the tube and container.
7. Repeat instructions 2 to 6 on opposite front caliper.
8. Bleed both rear wheel cylinders in similar manner commencing with the longest pipe run (i.e. commence with left hand cylinder on right hand steer models and right hand cylinder on left hand steer models).
9. Remove the bleed tube and container.

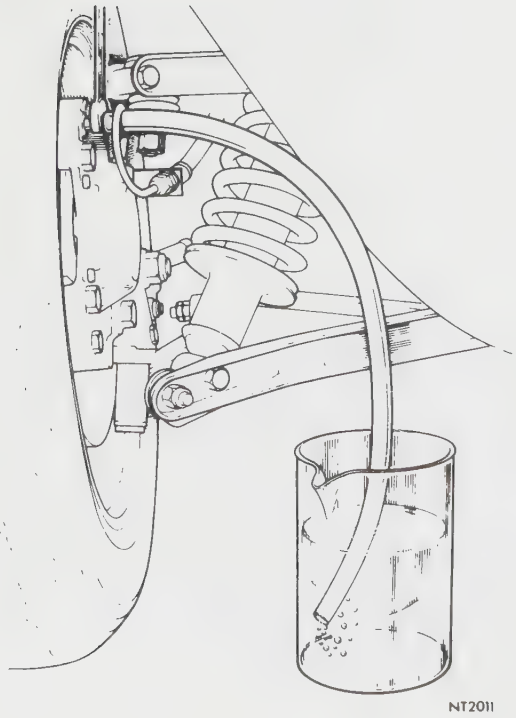

NT2011

BRAKES

– Bleed (Tandem type master cylinder) 70.25.02

Do not allow the fluid in the reservoir to fall below half capacity. When topping up the reservoir do not use aerated fluid discharged from the system.

1. Release the hand brake.
2. Attach a bleed tube to the nipple of the rear wheel cylinder farthest from the master cylinder. Allow the free end of the tube to hang submerged in brake fluid in a transparent container.
3. Slacken the bleed nipple and depress the brake pedal using light pedal pressure. Do not use the full travel of the brake pedal as this may cause the shuttle of the P.D.W.A. switch to be moved out of centre.
   Allow the brake pedal to return to its idle position and again depress lightly. Continue until discharge from the bleed tube is free of air.
4. Hold the pedal depressed, tighten the nipple and remove the bleed tube.
5. Repeat instructions 2 and 3 on the opposite rear wheel cylinder.
6. Attach the bleed tube to the front caliper farthest from the master cylinder.
7. Depress and release the brake pedal until air bubbles cease to issue from the bleed tube.
8. Hold the pedal depressed, tighten the nipple and release the brake pedal.
9. Attach the bleed tube to the opposite caliper and repeat instructions 7 and 8.
10. Check that the P.D.W.A. shuttle is centred by switching on ignition and observing the warning light. Re-centre the shuttle as necessary.

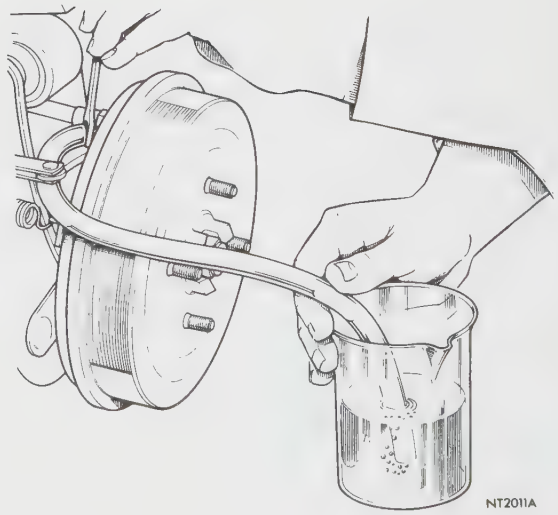

NT2011A

BRAKES

– Adjust 70.25.03

Front

The front disc brakes are self-adjusting.

Rear

1. Release the hand brake and raise the rear wheels clear of ground contact.
2. Rotate the square-ended adjusters on rear of backplate in clockwise direction until the wheel is locked.
3. Rotate the adjuster anti-clockwise until the wheel spins freely.
4. Repeeat instructions 3 and 4 on opposite rear wheel.
5. Remove the jack.

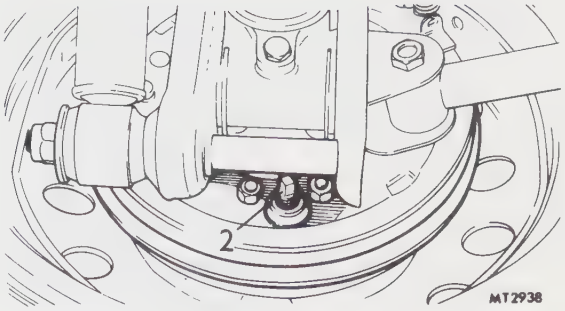

MASTER CYLINDER

– Remove and refit 70.30.01

Removing

1. Remove the clevis pin securing the master cylinder push rod fork to the brake pedal.
2. Disconnect the brake pipe at the master cylinder. Seal the master cylinder fluid outlet and the brake pipe to prevent ingress of foreign matter.
3. Remove the two bolts and spring washers securing the master cylinder to the mounting bracket.
4. Withdraw the master cylinder.

Refitting

5. Reverse instructions 1 to 4.
6. Bleed the brakes.

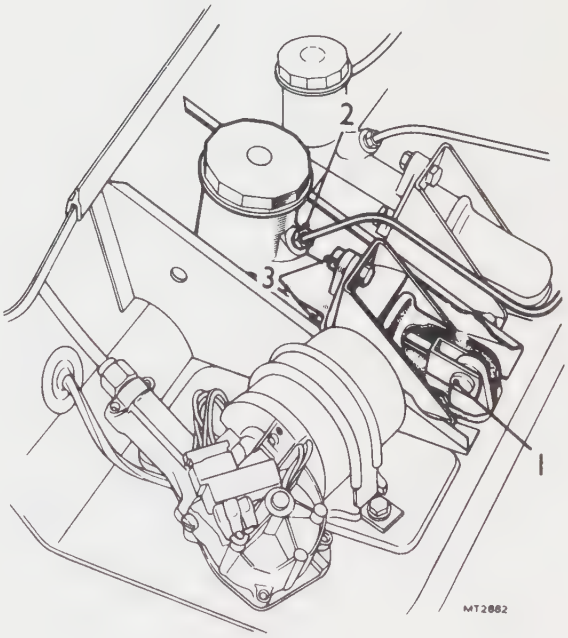

MASTER CYLINDER

– Overhaul **70.30.02**

[CAUTION: Wash hydraulic cylinder components in brake fluid only. Never use gasoline or other petroleum-based solvents since they are damaging to rubber parts in the system.]

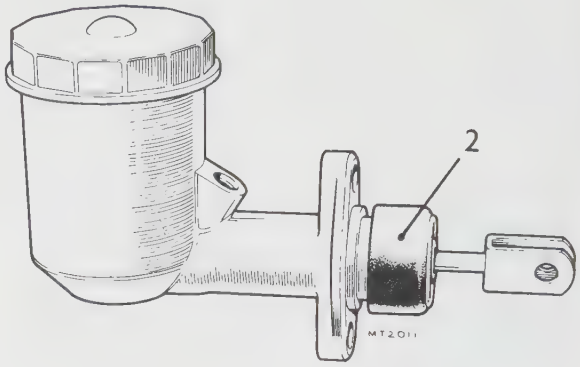

Dismantling

1. Drain the fluid reservoir.
2. Slide the rubber dust cover along the push rod to expose end of master cylinder.
3. Remove the circlip and withdraw the push rod and dished washer.
4. Withdraw the piston and seal assembly.
5. Straighten the prong of the spring thimble and remove the thimble from the piston.
6. Release the valve stem from the keyhole slot in the thimble.
7. Remove the spring and slide the valve seal spacer along the valve stem.
8. Remove the valve seal from the valve stem.
9. Remove the seal from the piston.
10. Clean and examine all components.

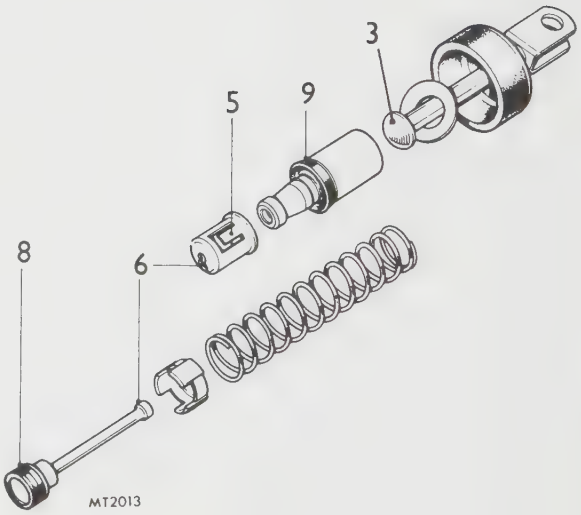

Assembling

11. Fit a new seal to the piston.
12. Fit a new seal to the valve stem.
13. Assemble the spacer, spring and thimble to the valve stem.
14. Fit the thimble to the piston and carefully depress the thimble prong.
15. Lubricate the master cylinder bore with clean brake fluid and insert the piston and seal assembly.
16. Fit the push rod and dished washer and secure with the circlip.
17. Fit a new rubber dust cover.

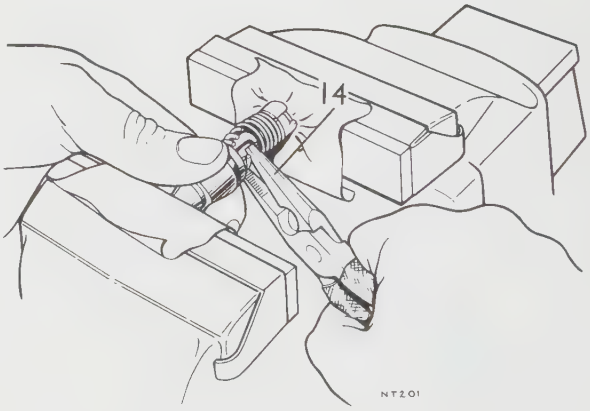

MASTER CYLINDER (TANDEM TYPE)

– Remove and refit **70.30.08**

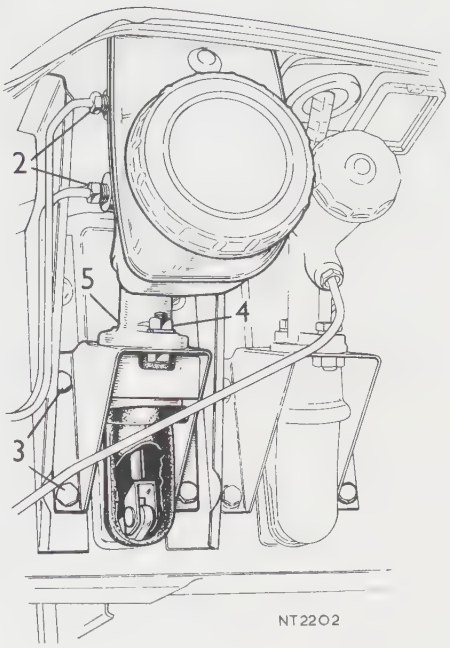

Removing

1. Raise the rubber boot to expose the master cylinder/brake pedal linkage and remove the split pin, plain washer, clevis pin and the rubber boot.
2. Disconnect the brake pipes at the master cylinder. Seal the master cylinder fluid outlets and the brake pipes to prevent ingress of foreign matter.
3. Remove the four bolts and spring washers securing the master cylinder mounting bracket to the scuttle and withdraw the mounting bracket and the master cylinder.
4. Remove the nut, spring washer and the bolt securing the master cylinder flange to the mounting bracket.
5. Remove the bolt and spring washer securing the master cylinder flange to the mounting bracket.

Refitting

6. Reverse instructions 1 to 5.
7. Bleed the brakes.

MASTER CYLINDER (TANDEM TYPE)

– Overhaul **70.30.09**

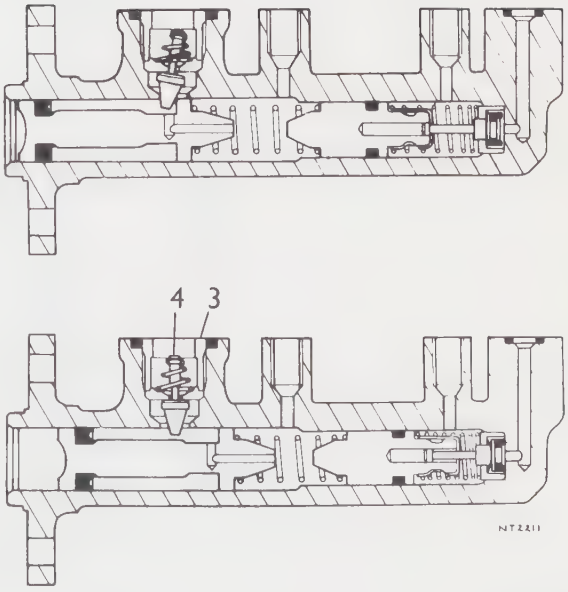

[CAUTION: Wash hydraulic cylinder components in brake fluid only. Never use gasoline or other petroleum-based solvents since they are damaging to rubber parts in the system.]

1. Remove the master cylinder, detach mounting bracket and drain the brake fluid. 70.30.08.

Dismantling

2. Remove the reservoir (four screws).
3. Remove the internal nut securing the tipping valve to the master cylinder body.
4. Apply slight pressure on the push rod to allow the tipping valve to seat and withdraw the tipping valve.
5. Slide the dust cover clear of the cylinder to expose the circlip retaining the push rod and remove the circlip.

6. Withdraw the push rod.
7. Withdraw the primary and secondary plungers complete with seals and springs.
8. Separate the plungers and the intermediate spring.
9. Prise up the leaf of the spring retainer and remove the spring and centre valve sub-assembly from the secondary plunger.
10. Withdraw the valve spacer, spring washer and valve seal from the valve head.
11. Remove the seals from the primary and secondary plungers.
12. Thoroughly clean all components.
13. Examine the cylinder bore for wear, scoring and corrosion. If damage or wear is evident a new tandem cylinder must be obtained.

Assembling

14. Fit new seals to the primary and secondary plungers.
15. Fit a new valve seal, smaller diameter leading, to the valve head.
16. Place the spring washer on the valve stem ensuring that the convex side of the washer is adjacent to the valve.
17. Fit valve spacer, legs leading.
18. Fit the spring retainer to the valve stem, keyhole leading.
19. Slide the secondary spring over the spring retainer and offer up the secondary plunger.
20. Place the secondary plunger and valve assembly between the protected jaws of a vice. To ensure cleanliness, clean paper should be placed on the vice jaws. Compress the spring and using a small screwdriver, press the spring retainer hard against the secondary plunger. Holding the retainer in this position depress the leaf of the spring retainer against the plunger. Remove the plunger and valve assembly from the vice and check that the retainer is firmly located on the plunger.
21. Fit the intermediate spring between the primary and secondary plungers.
22. Generously lubricate the cylinder bore and plungers with clean brake fluid and insert the plungers in the cylinder.
23. Fit the push rod and the retaining circlip and rubber boot.
24. Depress the push rod and insert the tipping valve. Fit seal and securing nut and tighten nut to a torque of 35 to 40 lbf ft (4.8 to 5.5 kgf m).
25. Fit the reservoir.

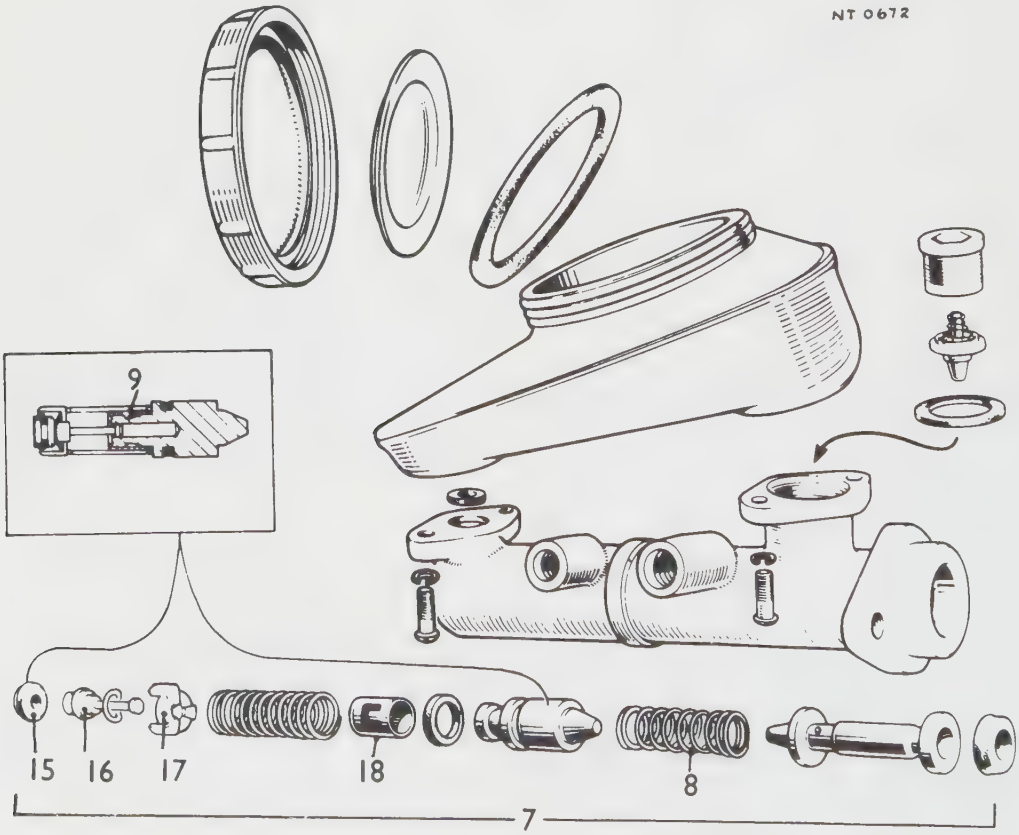

BRAKE PEDAL ASSEMBLY

– Remove and refit **70.35.01**

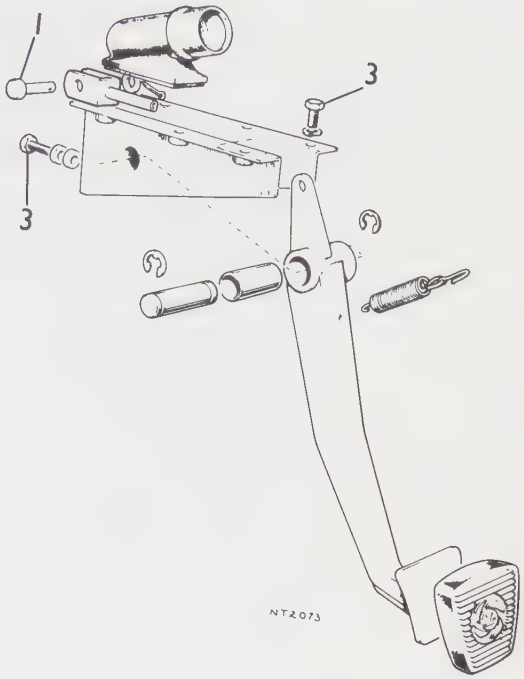

Removing

1. Remove the clevis pin securing master cylinder push rod fork to brake pedal.
2. Remove the terminal connectors from the brake light switch.
3. Remove the bolts, nuts and spring washers securing the brake pedal bracket to the scuttle.
4. Withdraw the brake pedal and bracket assembly.

Refitting

5. Reverse instructions 1 to 4.

HANDBRAKE LEVER

– Remove and refit **70.35.08**

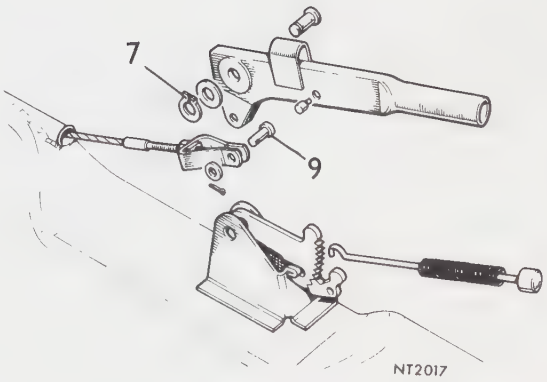

Removing

1. Remove the driver's and passenger's seats complete with runners. 76.70.04/05
2. Remove the safety belt buckle brackets from tunnel.
3. Remove the safety belt buckles from the floor of the car.
4. Remove the carpet.
5. Remove the hand grip from the handbrake lever.
6. Remove the four screws securing the handbrake cover and the cover clear of the handbrake.
7. Remove the circlip securing handbrake fulcrum pin to bracket.
8. Remove the fulcrum pin and lift the handbrake clear of the bracket.
9. Remove the split pin and clevis pin securing the handbrake lever to the cable fork and withdraw the handbrake lever.

Refitting

10. Reverse instructions 1 to 9.

HANDBRAKE PAWL AND RATCHET

– Remove and refit **70.35.09**

Removing

1. Remove the handbrake lever. 70.35.08.
2. File the riveted end of the pawl fulcrum pin until the end of the pin is flush with the handbrake lever.
3. Depress the handbrake button and retain in this position with tape.
4. Remove the pawl fulcrum pin and withdraw the pawl and ratchet.

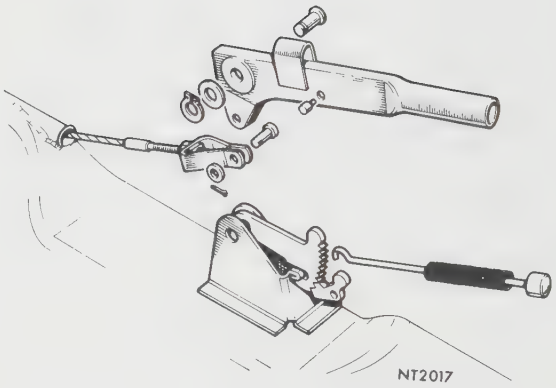

Refitting

5. Insert a new ratchet (hooked end downwards) into the handbrake lever.
6. Insert new pawl (teeth downward, facing teeth on ratchet) into handbrake lever.
7. Fit a new fulcrum pin to pawl and rivet the end of pin ensuring that the pawl pivots freely.
8. Engage hooked end of release lever in the pawl and remove the tape from the release button.
9. Secure the handbrake lever to the handbrake cable fork and fit a new split pin to the clevis pin.
10. Align the ratched hole with the hole in the handbrake lever and fit the lever to the car mounting bracket.
11. Fit the fulcrum pin and secure with the circlip.
12. Refit the handbrake cover, handgrip, carpet and seats. 70.35.08.

HANDBRAKE CABLES

Adjust 70.35.10

1. Jack up the rear wheels and support the chassis on stands.
2. Release the handbrake.
3. Rotate the rear brake adjusters and lock both rear wheels.
4. Check that the relay lever is positioned as shown. Adjust front and rear cables as necessary to obtain this condition.

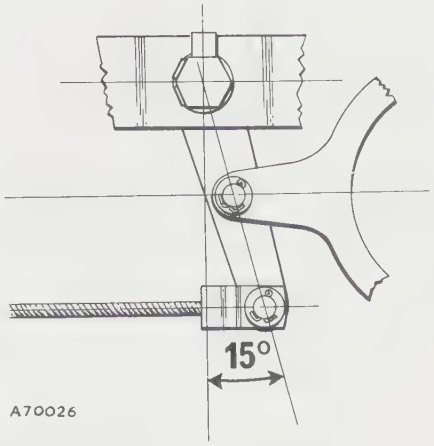

Adjusting the front cable

5. Remove the carpet and handbrake lever cover to expose the handbrake lever. 70.35.08.
6. Slacken the cable locknut at the rear end of the cable fork and rotate the cable as necessary, clockwise to tighten the cable, anti-clockwise to slacken the cable. Tighten the locknut. Note that it may be necessary to first release the rear cable from the brake backplate.
7. Refit the handbrake lever cover, carpets and seats. 70.35.08.

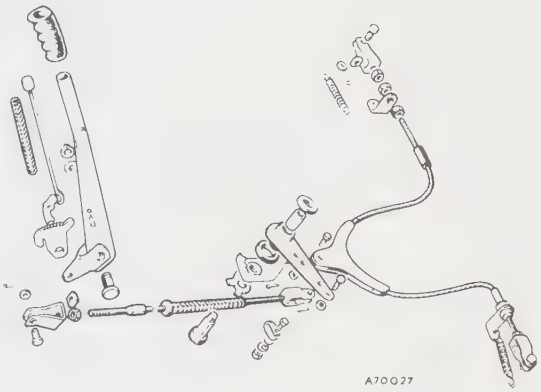

Adjusting the rear cable

8. Disconnect the cable fork ends from the brake backplate lever.
9. Adjust the cable forks equally at both ends of the cable until with slight strain applied to the cable, the clevis pins can be inserted to secure the cable forks to the backplate levers. Do not force the cables taut to insert the clevis pins.
10. Fit the washer and new split pins to the clevis pins.
11. Tighten the cable fork lock nuts.
12. Slacken the brake adjusters until the wheels spin freely.
13. Remove the chassis stands.

HANDBRAKE COMPENSATOR

– Remove and refit 70.35.11

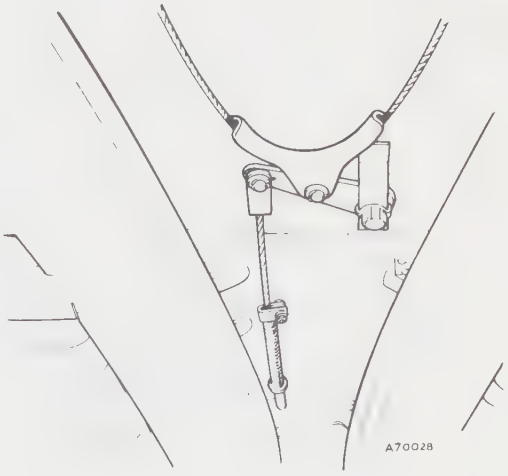

Removing

1. Release the handbrake.
2. Remove the split pin and plain washer securing the compensator to the relay lever and withdraw the clevis pin.
3. Remove the compensator from the rear cable.

Refitting

4. Reverse instructions 1 to 3.

HAND BRAKE CABLES

– Remove and refit **70.35.16**

Removing

Front

1. Remove the handbrake lever. 70.35.08.
2. Disconnect the cable fork from the handbrake lever.
3. Remove the front cable fork from the cable.
4. Disconnect the cable from the relay lever.
5. Withdraw the cable from the car.

Rear

6. Disconnect the compensator from the relay lever.
7. Unhook the cable return springs.
8. Disconnect the cable forks from the backplate levers.
9. Remove the cable forks and spring plates from the cable.
10. Withdraw the cable from the car.

Refitting

Front

11. Fit the cable in position on car.
12. Fit the fork and nuts to the front end of the cables.
13. Connect the front end of the cable to the handbrake lever.
14. Fit the handbrake lever to the car.
15. Set the relay lever as shown and connect the cable rear fork to the left hand inboard hole.
16. With the handbrake lever fully 'OFF' adjust the cable length. Do not alter the position of the relay lever.
17. Check that the cable spring is properly positioned and adjust the spring tension as necessary, by means of the rear pinch clamp.

Rear

18. Thread the cable through the cable guides.
19. Fit the nuts, spring plates and forks to both ends of the cable.
20. With the handbrake lever in the 'OFF' position, attach the cable and compensator to the right hand inboard hole of the relay lever.
21. Jack up the rear wheels and lock the rear brakes by means of the adjusters.
22. With the cable pulled by hand, adjust the fork ends so that the clevis pins will slip into place.
23. Secure fork lock nuts and fit split pins to clevis pins.
24. Attach return springs to the spring plates and the backplates.
25. Adjust the position of the spring plates to tension the springs.
26. Slacken the brake adjusters until wheels spin freely.
27. Remove the jack.

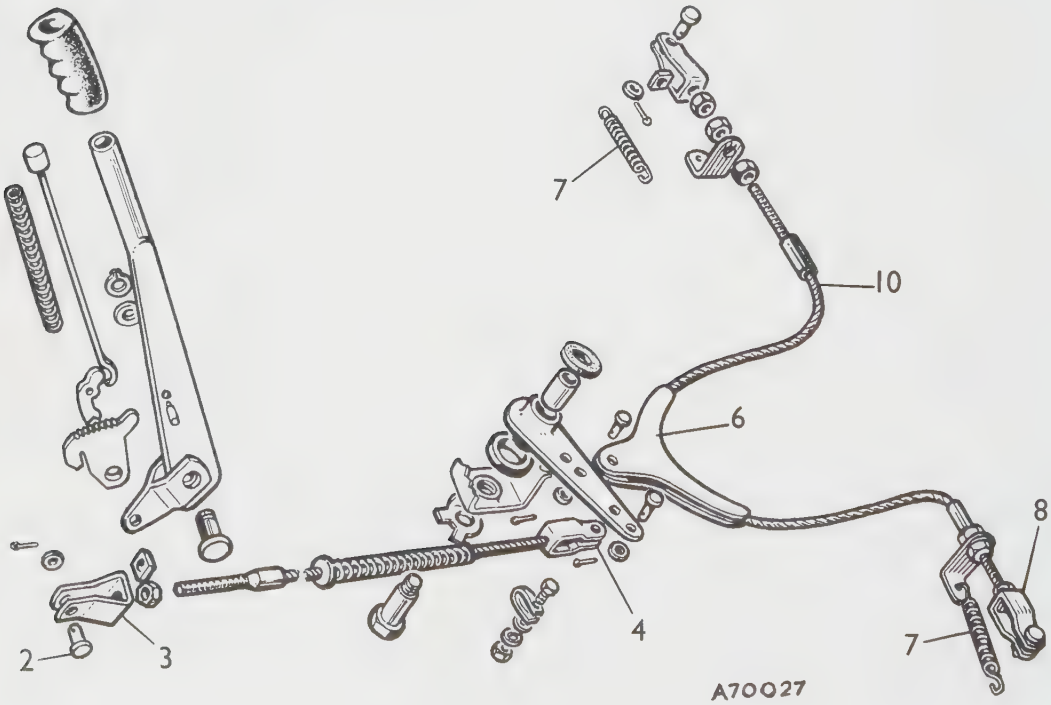

RELAY LEVER

– Remove and refit 70.35.22

Removing

1. Release the handbrake.
2. Disconnect the compensator from the relay lever.
3. Disconnect the front handbrake cable from the relay lever.
4. Straighten the tab washers securing the relay lever fulcrum bolt.
5. Remove the fulcrum bolt.
6. Withdraw the relay lever complete with rubber and felt seals.

Refitting

7. Lubricate the relay lever bush.
8. With the larger boss of the relay lever downwards position the relay lever and seals in the bracket (felt seal top, rubber seal bottom).
9. Fit the fulcrum bolt and tab washer to the relay lever bracket. Bend the tab washer to retain the bolt.
10. Connect the compensator to the right hand inboard hole in the relay lever.
11. Connect the front brake cable to the left hand inboard hole in the relay lever.

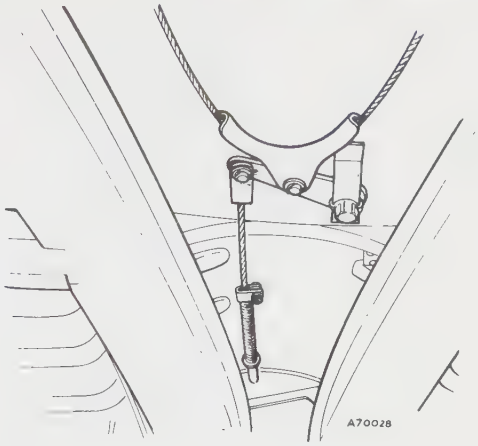

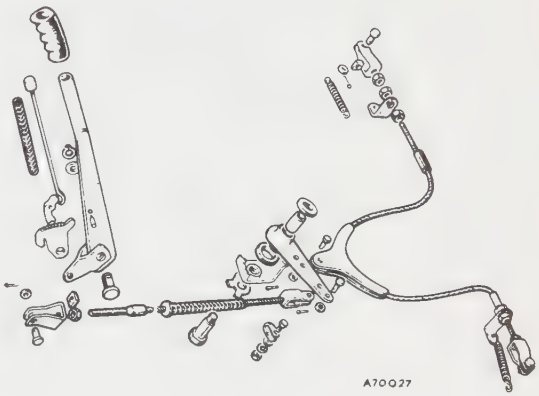

FRONT BRAKE PADS

– Remove and refit 70.40.02

Removing

1. Remove the front wheel.
2. Withdraw the two spring pins from the brake pad retaining pins.
3. Withdraw the brake pad retaining pins.
4. Lift out the brake pads complete with damping shims.

Refitting

5. If new brake pads are being fitted press the caliper pistons into their respective bores.
6. Clean the brake pad locations in the caliper.
7. Fit the brake pads complete with damping shims.
8. Fit the brake pad retaining pins to the caliper and secure with spring pins.
9. Fit the front wheel.

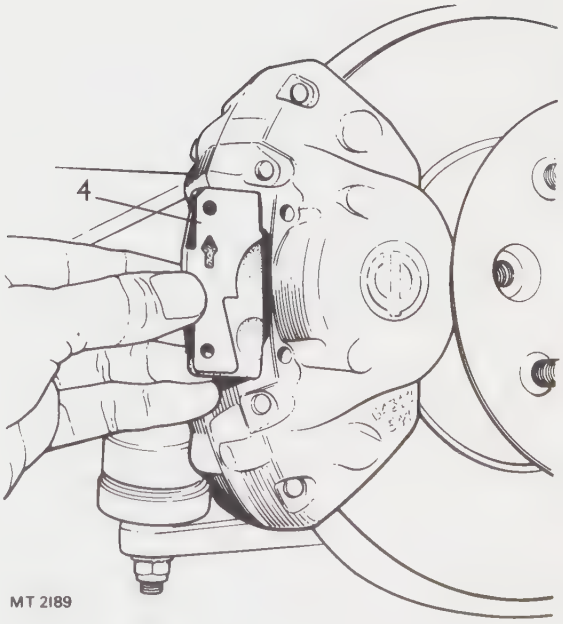

REAR BRAKE SHOES

– Remove and refit **70.40.03**

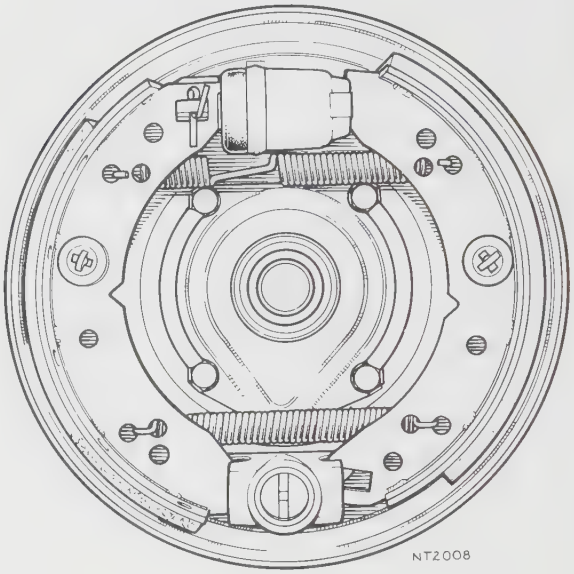

Removing

1. Remove the rear wheel.
2. Remove the brake drum.
3. Remove the split pin from the handbrake lever.
4. Remove the shoe-steady pins, caps and springs.
5. Release the lower end of one shoe from the brake adjuster.
6. Release the upper end of the same shoe from the wheel cylinder.
7. Unhook the brake shoe return springs.
8. Remove the brake shoes.

Refitting

9. Reverse instructions 1 to 8. Note that both brake shoe return springs are fitted inboard.

REAR BRAKE ADJUSTER

– Remove and refit **70.40.17**

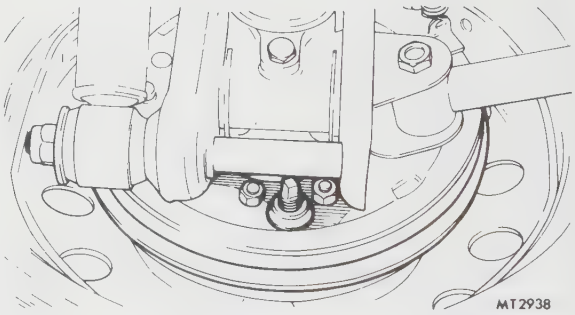

1. Remove the rear wheel.
2. Remove the brake drum.
3. Remove the brake shoes.
4. Remove two bolts and spring washers securing the brake adjuster to the backplate.
5. Withdraw the adjuster.

Refitting

6. Reverse instructions 1 to 5.
7. Adjust the brake.

FRONT CALIPER

– Remove and refit 70.55.02

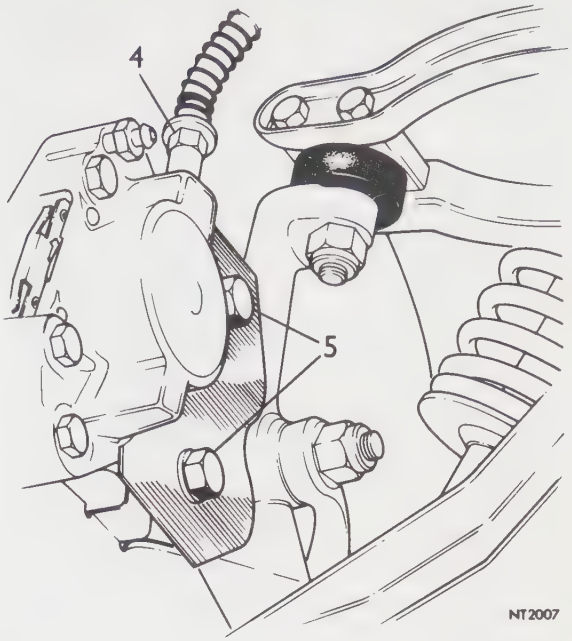

Removing

1. Remove the front wheel.
2. Disconnect the fluid supply pipe to the caliper flexible hose.
3. Remove the nut securing the flexible hose to the front suspension bracket and withdraw the hose from the bracket.
4. Unscrew the flexible hose from the caliper.
5. Remove the two bolts and spring washers securing the caliper shield to the vertical link.
6. Withdraw the caliper shield and caliper.

Refitting

7. Reverse instructions 1 to 6.
8. Bleed the brakes.

FRONT CALIPER

– Renew seals 70.55.13

[CAUTION: Wash hydraulic cylinder components in brake fluid only. Never use gasoline or other petroleum-based solvents since they are damaging to rubber parts in the system.]

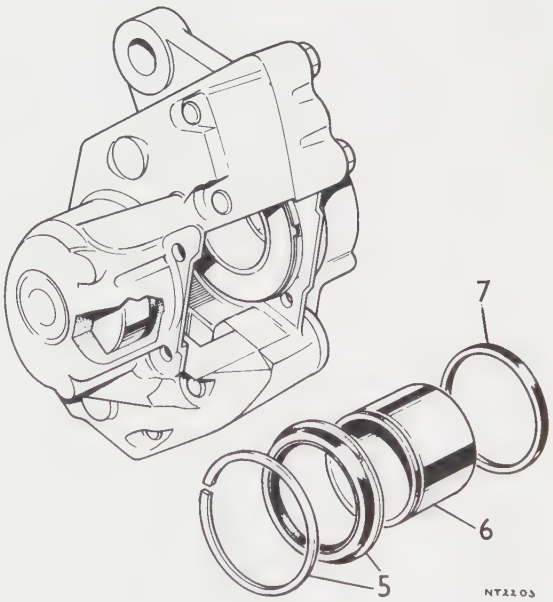

Removing

1. Remove the caliper. 70.55.02.
2. Remove the spring pins from the brake pad retaining pins.
3. Withdraw the pad retaining pins.
4. Withdraw the brake pads and shims.
5. Remove the circlip retaining the piston dust covers and withdraw the dust covers.
6. Extract the caliper piston. Piston removal may be facilitated using a low pressure air line. Do not interchange the pistons.
7. Prise out the cylinder seals taking care not to damage the cylinder bore.
8. Thoroughly clean the caliper bores and pistons using brake fluid or methylated spirits. If the pistons or the bores are scored or corroded, a new caliper must be obtained.

Refitting

9. Carefully install new seals in the cylinder bores.
10. Lubricate the bores with clean brake fluid.
11. Evenly enter the pistons into their original locations in the caliper.
12. Fit new dust covers and circlips.
13. Fit the caliper and caliper shield to the vertical link.
14. Fit the flexible hose.
15. Fit the brake pads and shims.
16. Fit the front wheel.
17. Bleed the brakes.

REAR BRAKE CYLINDER

– Remove and refit **70.60.18**

Removing

1. Jack up the car and support the chassis on stands.
2. Remove the rear wheel.
3. Release the handbrake and remove the brake drum.
4. Remove the brake shoes.
5. Disconnect the handbrake cable at the brake backplate lever.
6. Remove the flexible brake hose.
7. Remove the wheel cylinder rubber shield at the rear of the backplate.
8. Remove the horse-shoe clip and spring plate securing the wheel cylinder to the backplate.
9. Withdraw the wheel cylinder complete with the handbrake operating lever.

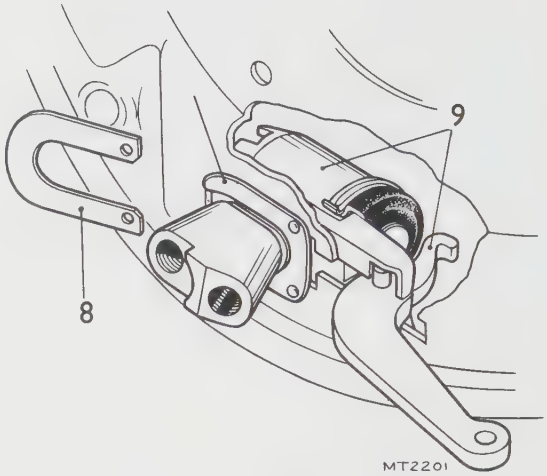

Refitting

10. Ensure that the wheel cylinder mounting face and the backplate are clean.
11. Lightly smear the wheel cylinder mounting face and both sides of the backplate faces with a zinc base grease.
12. Install the handbrake lever in the wheel cylinder.
13. Enter the wheel cylinder and the handbrake lever in the backplate.
14. Install the spring plate at the rear of the wheel cylinder (open end of plate towards rear of car, dimples on plate towards differential).
15. Install the horse-shoe clip (open end of clip towards the front of car). Ensure that the holes in the clip engage the dimples on the spring plate. Check that the wheel cylinder is free to slide on the backplate.
16. Fit the rubber shield.
17. Reverse instructions 1 to 6.
18. Bleed the brakes.

REAR BRAKE CYLINDER

– Overhaul **70.60.26**

[CAUTION: Wash hydraulic cylinder components in brake fluid only. Never use gasoline or other petroleum-based solvents since they are damaging to rubber parts in the system.]

1. Remove the clip retaining the rubber boot to the cylinder body.
2. Withdraw the piston complete with rubber boot and seal from the cylinder.
3. Remove the boot and seal from the piston.
4. Examine the piston and cylinder bore for signs of corrosion or scoring. If either are damaged a new brake cylinder must be obtained.
5. Fit a new seal to the piston.
6. Fit a new rubber boot to the piston.
7. Lubricate the cylinder bore, seal and piston with clean brake fluid and insert the piston in the cylinder bore.
8. Fit the boot to the cylinder and secure with the clip.

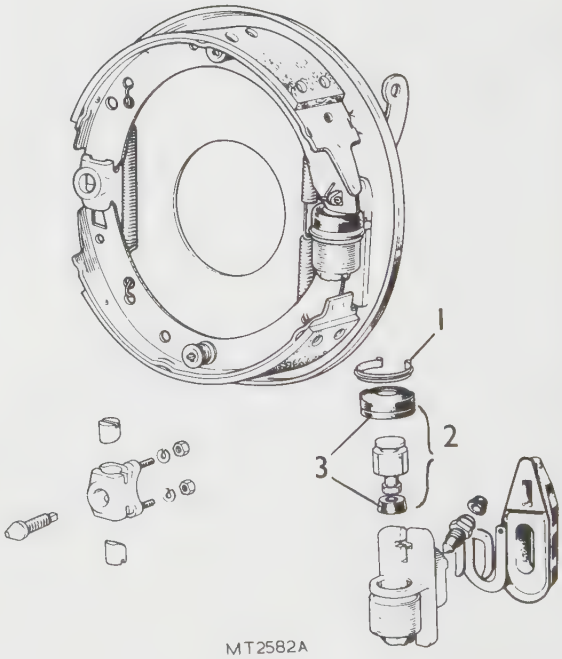

WHEEL AND TYRE OPERATIONS

Tyres general 74.10.00

Wheel and Tyre balance 74.15.00

Wheels – general 74.20.00
– remove and refit 74.20.01

TYRES – GENERAL

74.10.00

Type	Size	Load Conditions	Pressures			
			Front		Rear	
			kg/cm²	lb/in²	kg/cm²	lb/in²
Radial Ply Tubeless	155 SR – 13	All	1·476	21	1·828	26

Tyres of the correct type and dimensions, at the correct cold inflation pressures, are an integral part of the vehicle's design and regular maintenance of tyres contributes not only to safety but to the designed functioning of the vehicle, Road-holding, steering and braking are especially vulnerable to incorrectly pressurized, badly fitted or worn tyres.

Tyres of the same size and type but of different make may have widely varying characteristics. It is therefore recommended that tyres of the same make are fitted to all wheels.

Radial and cross-ply tyres

It is both dangerous and, in the U.K. illegal, to use on the public roads a vehicle fitted with unsuitable combinations of tyres. The following recommendations should therefore be observed.

1. Do not mix radial-ply and cross-ply tyres on the same axle.
2. Do not fit radial-ply tyres to the front wheels and cross-ply tyres to the rear wheels.
3. With suitable tyre pressure adjustments it may be possible to obtain acceptable handling with cross-ply tyres on the front wheels and radial-ply tyres on the rear wheels, but this combination is not recommended.

Size, type, pressures

The pressures recommended (see chart) provide optimum ride and handling characteristics for all normal operating conditions. The pressures should be checked, and adjusted if necessary, once per week. This should be done with the tyres cold. Tyre temperatures and pressures increase when running. Bleeding a warm tyre to the recommended pressures will result in under-inflation which may be dangerous. A slight natural pressure loss occurs with time. If this exceeds 0.14 kg/cm² (2 lb/in²), per week, the cause should be investigated and rectified. It should be noted that it is an offence in the U.K. to use a motor vehicle if a tyre is not so inflated as to make it fit for the use to which the vehicle is being put.

The spare wheel tyre should be maintained at the highest pressure quoted in the chart, and adjusted to the correct pressure for its position when fitted for use.

Wear

All tyres fitted as original equipment include wear indicators in their tread pattern. When the tread has worn to a remaining depth of 1.5 mm (0.06 in) the indicators appear at the surface as bars which connect the tread pattern across the full width of the tyre. It is illegal in the U.K. and certain other countries to continue to use tyres on which the tread is worn to less than 1 mm. It should be noted that the properties of many tyres alter progressively with wear. In particular the 'wet grip' and aquaplaning resistance are gradually but substantially reduced. Extra care and speed restriction should therefore be exercised on wet roads as the effective tread depth diminishes. Incorrect wheel alignment will accelerate tyre wear. Fins on the inside or outside edges of the tread pattern are caused by excessive toe-in or toe-out respectively. As fins may also be caused by high cornering speeds or road camber it is better to have the cause ascertained by having the wheel alignment checked (see 'General Specification' for data).

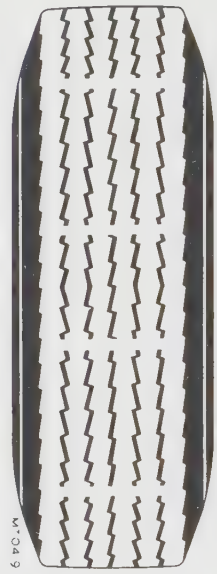

Damage

Excessive local distortion can cause the casing of the tyre to fracture and may lead to premature tyre failure. Tyres should be examined especially for cracked walls, exposed cords, etc. Flints and other sharp objects should be removed from the tyre tread, if neglected they may work through the cover. Any oil or grease which may get onto the tyres should be cleaned off by using fuel sparingly. Do not use paraffin (kerosene) which has a detrimental effect on rubber.

Repairs

Tubeless tyres

A temporary repair can be made to tubeless tyres, using a special kit, provided the puncturing hole is small and confined to the central tread area. The following precautions must, however, be observed.

1. Do not use more than one plug in each hole.
2. Do not use the tyre for high speeds.
3. Ensure that a permanent 'cold patch' or vulcanised repair is made at the earliest opportunity.

Tubes

When repairing tubes, have punctures or injuries vulcanised. Ordinary patches should only be used for emergencies. Vulcanising is absolutely essential for tubes manufactured from synthetic rubber.

Winter tyres

Winter tyres are designed to give improved traction and braking in mud and snow. Their performance on hard surfaces may, however, be inferior to normal road tyres and extra care is required when using them under normal conditions.

Racing and competition tyres

Should the vehicle be tuned to increase its maximum speed, or be used for racing or competition, consult the respective tyre company regarding the need for tyres of special or racing construction.

Valves

Whenever a new tubeless tyre is fitted, the Schrader snap-in type valve must also be renewed. To facilitate fitting, lubricate the valve with soap solution before using a special tool to snap the valve squarely into an airtight position in the rim hole.

WHEEL AND TYRE BALANCE 74.15.00

Tyre and wheel assemblies should be statically balanced to within 5 ozf ins. Balance weights are available in ½ oz increments from ½ to 3 oz.

WHEELS

– General 74.20.00

Pressed Steel Wheels

4½J rims. Wheels are located and retained on hubs by four ⅜ ins. U.N.F. studs and chrome-plated dome nuts tightened to 5.2 to 6.6 kgf m (38 to 48 lbf ft). Embellishment is provided by spring-loaded plastic hub covers fitted under the dome nuts.

Wheel Tolerances

Wobble

1. Lateral variation measured on the vertical inside face should not exceed 1.270 mm (0.050 in).

Lift

2. On a truly mounted and revolving wheel the difference between the high and low points measured on either rim ledge should not exceed 1.270 mm (0.050 in).

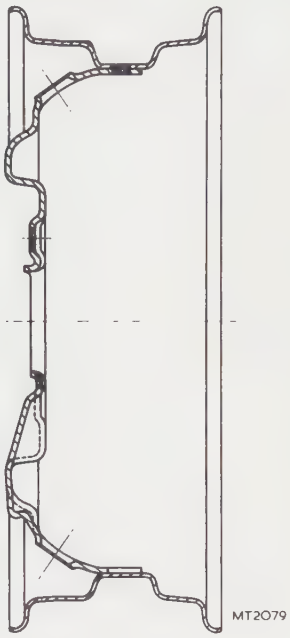

WHEELS

– Remove and refit 74.20.01

Removing

1. Slacken the wheel retaining nuts.
2. Locate the jack in the locating point adjacent to the wheel being lifted and raise the jack sufficiently for the wheel to clear the ground.
3. Remove the wheel retaining nuts and the plastic hub cover.
4. Lift off the road wheel.

Refitting

5. Reverse instructions 1 to 4, ensuring that the wheel retaining nuts are tightened to 5.2 to 6.6 kgf m (38 to 48 lbf ft).

BODY OPERATIONS

Armrest – remove and refit 76.13.21

Ashtray – front – remove and refit 76.67.13

Bonnet – adjust 76.16.02

Bonnet – remove and refit 76.16.01

Bonnet catch – remove and refit 76.16.34

Bonnet stay – remove and refit 76.16.14

Bumper – front – remove and refit 76.22.08
– overrider – remove and refit 76.22.01

Bumper – rear – remove and refit 76.22.15
– overrider – remove and refit 76.22.02

Carpet – gearbox cover – remove and refit 76.49.01

Carpet – rear – remove and refit 76.49.03

Chassis frame – alignment check 76.10.02

Door check strap – remove and refit 76.40.27

Door – remove and refit 76.28.01

Door glass – remove and refit 76.31.01

Door glass regulator – front – remove and refit 76.31.45

Door handle – remove and refit 76.58.01

Door hinges – remove and refit 76.28.42

Door lock – remove and refit 76.37.12

Door lock remote control – remove and refit 76.37.31

Door lock striker – remove and refit 76.37.23

Door pull 76.58.25

continued

BODY OPERATIONS – continued

Door trim pad – remove and refit 76.34.01

Fascia – centre – remove and refit 76.46.02
– drivers side – remove and refit 76.46.01
– passengers side – remove and refit 76.46.03

Fascia crash pad 76.46.04

Fascia support bracket 76.46.09

Front valance spoiler – remove and refit 76.10.46

Gearbox tunnel cover – remove and refit 76.25.07

Glass – windscreen – remove and refit 76.81.01

Grille – front – remove and refit 76.55.03

Hardtop – remove and refit 76.61.01

Hood assembly – remove and refit 76.61.08

Luggage compartment lid – remove and refit 76.19.01

Luggage compartment lid hinges – remove and refit 76.19.07

Luggage compartment lid lock – remove and refit 76.19.11

Luggage compartment lid lock striker – remove and refit 76.19.12

Luggage compartment lid seal – remove and refit 76.19.06

Parcel shelf – drivers side – remove and refit 76.67.04

Parcel shelf – passengers side – remove and refit 76.67.05

Private lock – remove and refit 76.37.39

Rear compartment trim pad – remove and refit 76.13.20

Seat belt – static – remove and refit 76.73.02

Seat belt – automatic – remove and refit 76.73.10

Seat cushion cover – remove and refit 76.70.02

Seat – driver – remove and refit 76.70.04

Seat – passenger – remove and refit 76.70.05

Seat runners – remove and refit 76.70.21

BODY OPERATIONS – continued

Seat squab catch – remove and refit 76.70.27

Seat squab cover – remove and refit 76.70.03

Transmission tunnel trim pads – remove and refit 76.13.06

Valance – engine L.H. – remove and refit 76.79.07

Valance – engine R.H. – remove and refit 76.79.08

Underriders 76.22.01

CHASSIS FRAME

– Alignment check 76.10.02

Whilst severe damage to the chassis is readily detected, less serious damage may cause distortion, that is not visually apparent. If steering and suspension checks indicate a fault which cannot be attributed to anything other than chassis distortion, the chassis frame should be checked for twist and squareness.

Checking for Twist

1. Position the vehicle on a clean and level floor.
2. Remove the underriders. 76.22.01.
3. Place a jack under each jacking point and remove the road wheels. 74.20.01.
4. Adjust the jacks until the following conditions are achieved:
   Points 'A' are 64.23 cm (25.29 in) above the floor.
   Points 'E' are 63.35 cm (24.94 in) above the floor.
   This condition sets the datum 50.8 cm (20 in) above the floor.
   If the height of points 'A' cannot be equalised, the difference in height of points 'A' indicates the amount by which the chassis is twisted.

Checking for squareness

5. Transfer all the lettered points shown to the floor, using a plumb-bob and fine cord.
6. Letter the points on the floor and connect each pair by drawing a line between them.
7. Mark the central point of each line and place a straight edge along these mid-points.
8. Check for squareness.
9. Using a straight edge mark the diagonals as shown.
10. Check for squareness. If the chassis is square then each pair of opposite diagonals must be equal in length and the points of intersection must lie on the same straight line.
11. The extent of lateral chassis distortion is assessed by the amount and direction by which any central point on the transverse line and/or the point of intersection of any pair of diagonals deviates from the centre line.

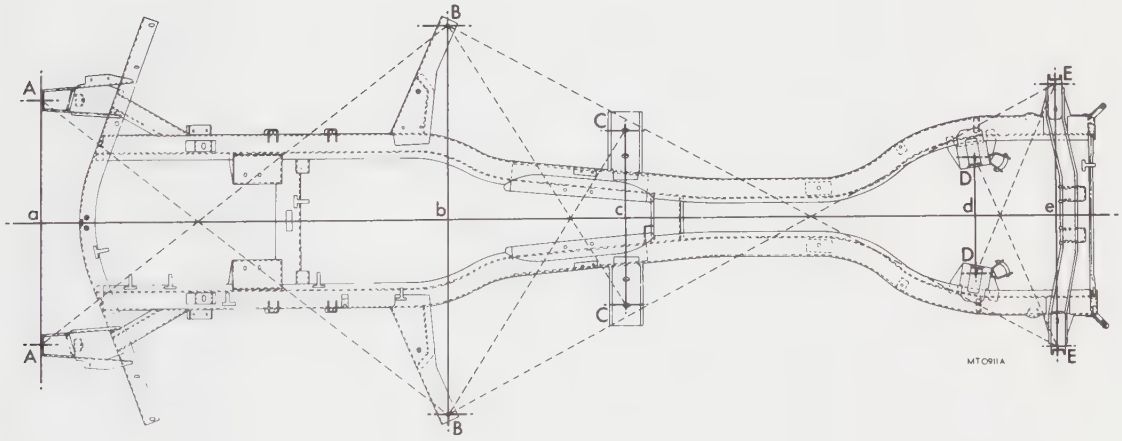

76.10.02 Sheet 1

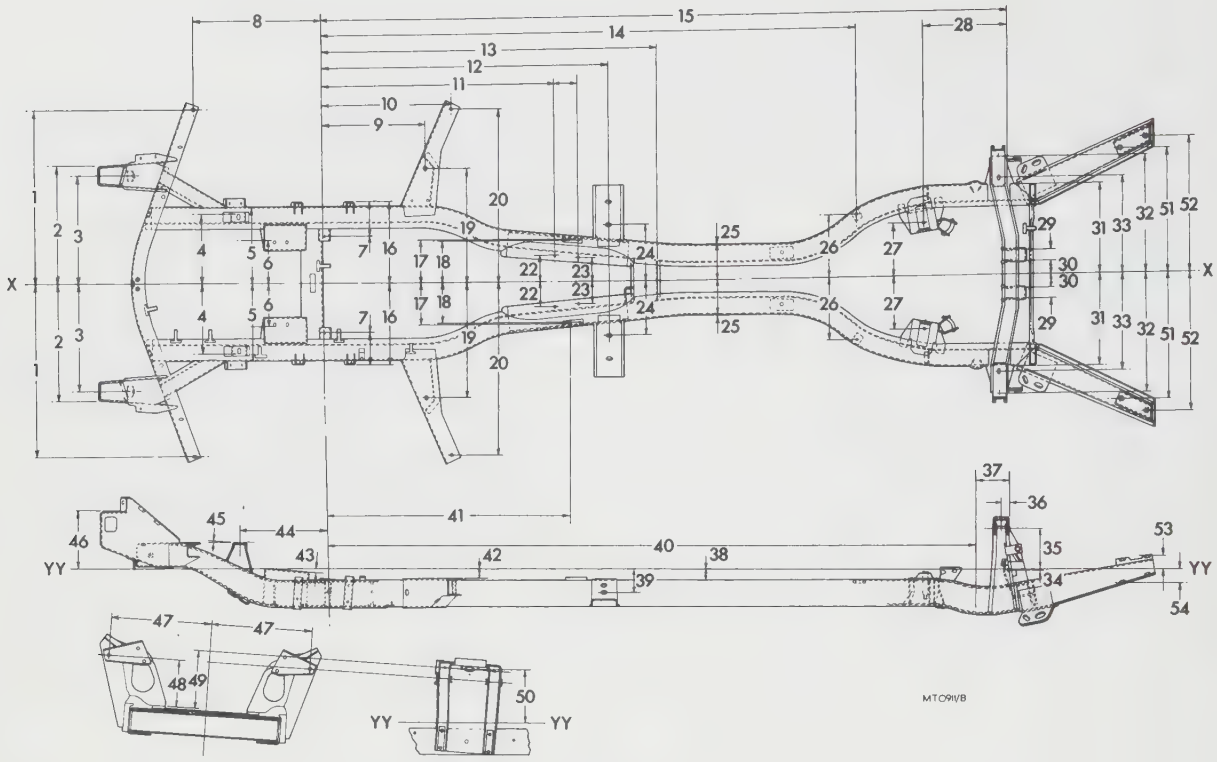

	Centimetres	Inches		Centimetres	Inches		Centimetres	Inches
1	59.69	22.15	19	36.83	14.51	38	2.87	1.13
	58.42	22.10		36.78	14.48	39	7.11	2.80
3	35.00	13.78	20	53.39	21.03	40	211.48	83.26
	34.85	13.72		53.27	20.97	41	79.88	31.45
4	21.89	8.64	22	7.65	3.01		77.73	31.39
5	24.84	9.78		7.59	2.99	42	2.69	1.06
	24.69	9.72	23	7.37	2.91	43	4½°	4½°
6	14.04	5.53		7.24	2.89	44	30.65	12.07
	13.97	5.50	24	18.26	7.19		30.32	11.94
7	10.97	4.32		18.11	7.13	45	4½°	4½°
	10.92	4.30	25	10.80	4.25	46	18.75	7.38
8	44.12	17.37	26	19.86	7.83		18.42	7.25
	43.91	17.25		19.81	7.80	47	33.17	13.06
9	32.36	12.78	27	16.87	6.64		32.87	12.94
	32.31	12.72		16.79	6.61	48	15.01	5.91
10	40.87	16.09	28	27.18	10.70	49	18.50	7.31
	40.72	16.03		27.05	10.65	50	15.97	6.29
11	82.90	32.64	29	3.83	1.51		15.67	6.17
	82.49	32.48	30	4.14	1.63		U.S.A. Market only	
12	92.86	36.56		4.09	1.61			
	92.56	36.44	31	28.65	11.28	51	41.16	16.22
13	107.16	42.19		28.50	11.22		40.83	16.09
	104.83	41.94	32	37.46	14.75	52	44.73	17.61
14	173.28	68.22	33	30.48	12.00		44.42	17.49
	172.97	68.10	34	0.38	0.15	53	4.90	1.93
15	221.46	87.19	35	12.70	5.00		4.60	1.81
	220.80	86.93		12.40	4.88	54	3.84	1.515
16	26.21	10.32	36	2.87	1.12			
17	13.69	5.39		2.54	1.00			
	13.61	5.36	37	10.31	4.06			
18	13.28	5.23						
	13.20	5.20						

SPOILER

– Remove and refit 76.10.46

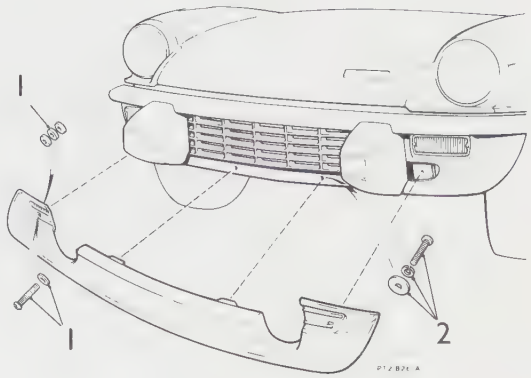

Removing

1. Remove the outer two screws, spring washers and six spacers.
2. Support the spoiler and remove the inner two screws, spring washers and plain washers securing it to the front crossmember.

Refitting

3. Position the spoiler and loosely fit the outer two screws, spring washers and six spacers.
4. Fit the inner two screws, spring washers and plain washers. Full tighten the screws to pull the spoiler flush against the crossmember.
5. Fully tighten the outer screws.

TRANSMISSION TUNNEL TRIM PADS

– Remove and refit – upper 1 and 2 76.13.06
– side 1 to 4

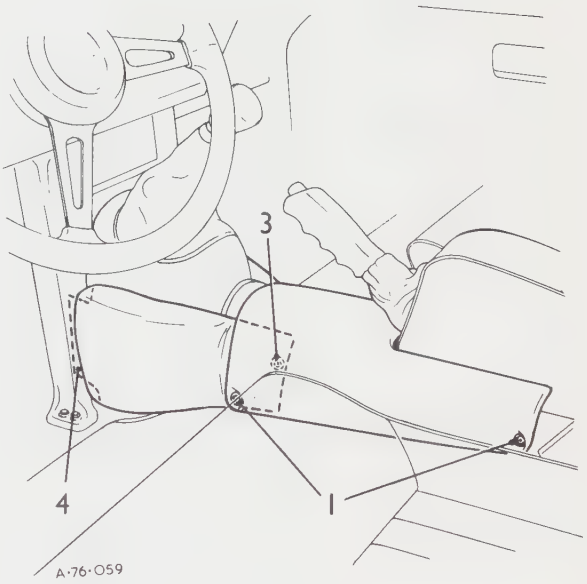

Removing

1. Remove the four screws and cup washers.
2. Lift off the upper trim pad.
3. Remove the two screws.
4. Detach the forward ends of the side trim pads from the console.

Refitting

5. Reverse instructions 1 to 4.

REAR COMPARTMENT TRIM PAD

– Remove and refit 76.13.20

The trim pad is secured to the rear compartment by six screws and cup washers.

ARM REST

– **Remove and refit** 76.13.21

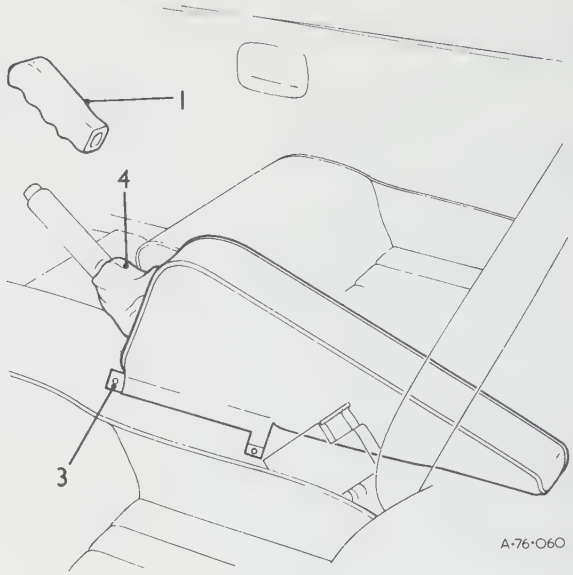

Removing

1. Pull off the hand brake lever grip.
2. Remove the upper transmission tunnel trim pad, four screws and cup washers.
3. Remove the two screws securing the forward ends of the arm rest to the transmission tunnel.
4. Carefully draw the grommet over the hand brake lever and lift off the arm rest.

Refitting

5. Reverse instructions 1 to 4.

BONNET

– **Remove and refit** 76.16.01

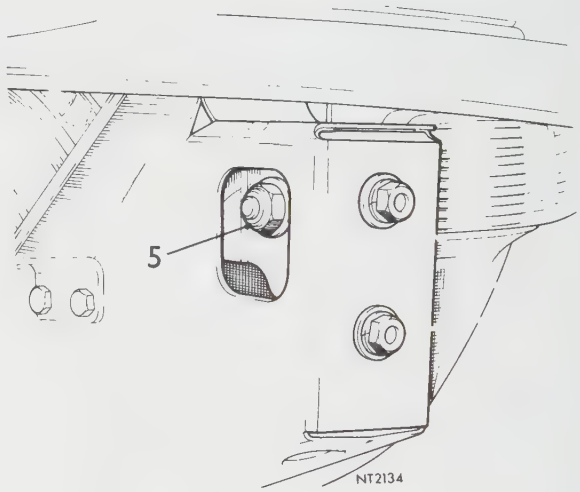

Removing

1. Disconnect the battery.
2. Disconnect the six headlamp leads.
3. Remove the nut, bolt, spacer and plain washers securing the bonnet stay to the wheelarch.
4. Lower the bonnet and remove the underriders/overriders. 76.22.01.
5. Remove the two bolts, spring and plain washers.
6. Lift the bonnet away.

Refitting

7. Reverse instructions 1 to 6, ensuring that the distance pieces and thrust washers are correctly located when refitting bolts 5.
8. Adjust the bonnet if necessary. 76.16.02.

BONNET

– Adjust 76.16.02

Adjust the bonnet mountings as follows to achieve a parallel gap of 5 mm (3/16 in) between the bonnet, scuttle and doors.

1. Remove the underriders/overriders. 76.22.01.
2. Slacken the two bolts and move the bonnet forwards or rearwards as required.
3. Retighten the two bolts.
4. Slacken the four screws and move the stop plates forward or rearwards to ensure correct location of the buffers.
5. Retighten the four screws.
6. Slacken the four bolts and raise or lower the bonnet as required.
7. Retighten the four bolts.
8. Slacken the two locknuts and screw the buffer in or out as required.
9. Retighten the two locknuts.
10. Slacken the four bolts and re-position the catch plates to ensure correct engagement of the bonnet catches.
11. Retighten the four bolts.
12. Refit the underriders/overriders. 76.22.01.

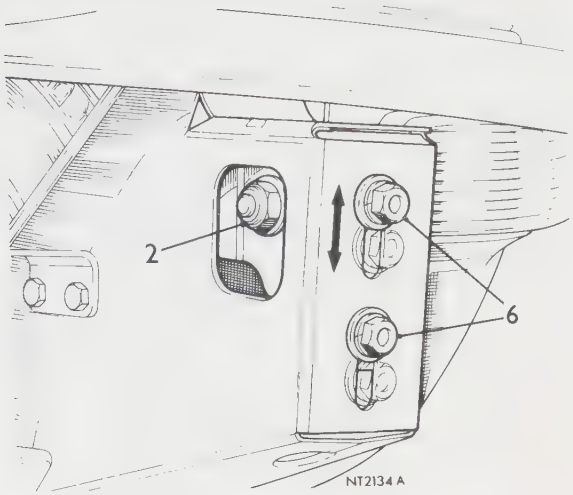

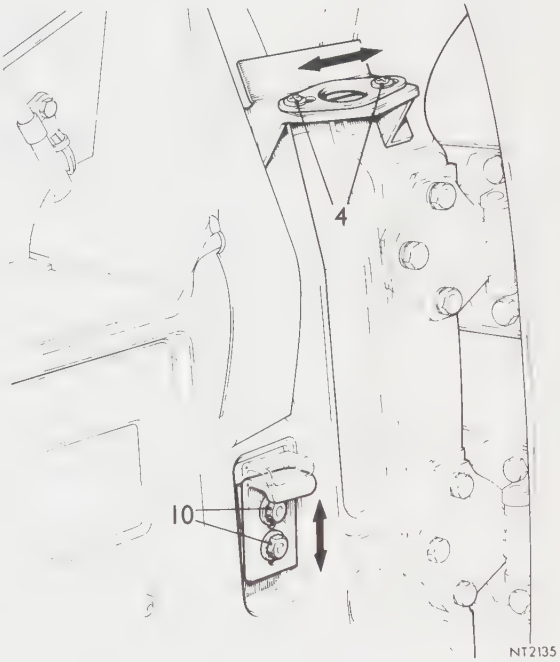

BONNET STAY

– Remove and refit 76.16.14

Removing

1. Raise and support the bonnet.
2. Remove the nut, bolt, spacer, and plain washers securing the stay to the wheel arch.
3. Remove the nut, bolt, spacer and plain washer securing the stay to the chassis. Remove the stay.

Refitting

4. Reverse instructions 1 to 3.

BONNET CATCH

– Remove and refit 76.16.34

Removing

1. Remove the three nuts, spring washers, plain washers and screws.
2. Withdraw the bonnet catch.

Refitting

3. Reverse instructions 1 and 2.

LUGGAGE COMPARTMENT LID

– Remove and refit **76.19.01**

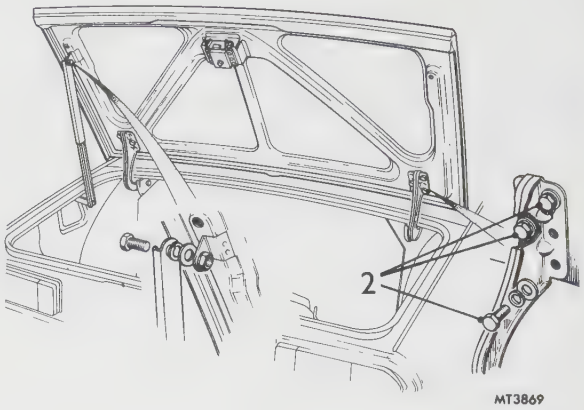

Removing

1. Remove the bolt, spring washer and plain washer securing the support stay to the lid.
2. Remove six bolts, spring washers and plain washers securing the hinges to the lid.

Refitting

3. Reverse instructions 1 and 2, ensuring correct alignment.

LUGGAGE COMPARTMENT LID SEAL

– Remove and refit **76.19.06**

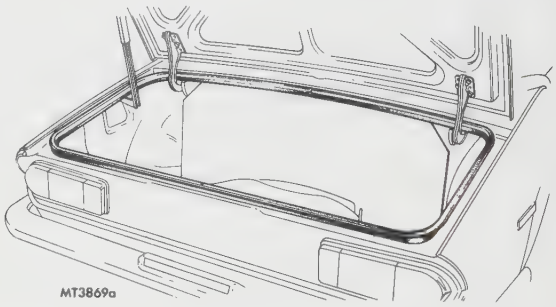

Removing

1. Free the seal from the body, using a suitable blunt tool if necessary.

Refitting

2. Fit the seal, using Seelastik SR51.

LUGGAGE COMPARTMENT LID HINGES

– Remove and refit **76.19.07**

Removing

1. Remove the lid. 76.19.01.
2. Remove the four nuts, spring washers and plain washers and lift off the hinges.

Refitting

3. Reverse instructions 1 and 2, ensuring correct alignment of the lid.

LUGGAGE COMPARTMENT LID LOCK

– Remove and refit 76.19.11

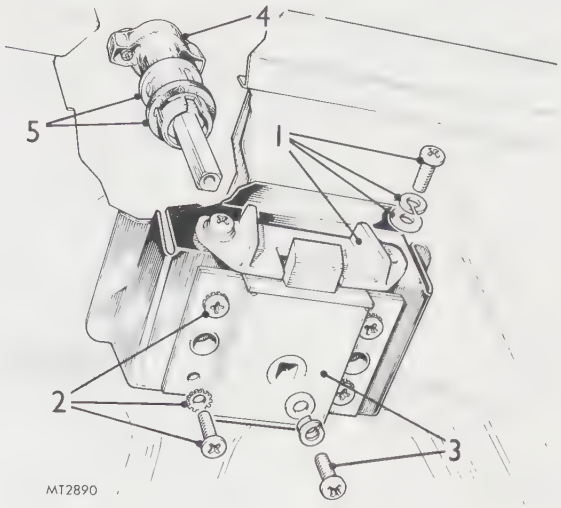

Removing

1. Remove the striker sleeve – two screws, spring washers and plain washers.
2. Remove the four screws and shakeproof washers.
3. Remove the screw, spring washer and plain washer and lift off the latch.
4. Withdraw the lock barrel and shaft.
5. Press out the escutcheon and seating washer.

Refitting

6. Reverse instructions 1 to 5, check lid alignment and adjust striker sleeve if necessary.

LUGGAGE COMPARTMENT LID LOCK STRIKER

– Remove and refit 76.19.12

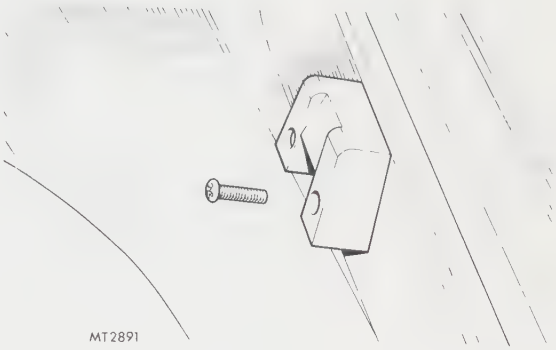

Removing

1. Remove the two screws and lift off the striker.

Refitting

2. Reverse instruction 1, ensuring correct lid closing action and alignment.

UNDERRIDERS

– Remove and refit **76.22.01**

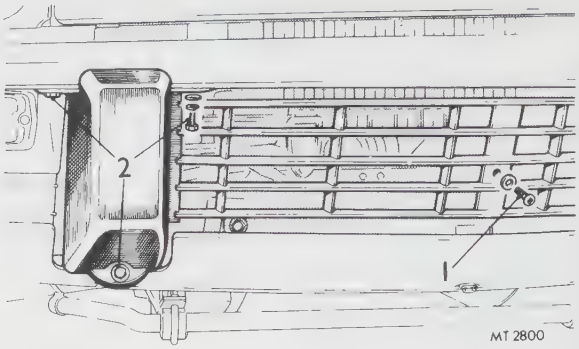

Removing

1. Remove one screw and plain washer.
2. Remove the three bolts, spring washers and plain washers.
3. Lift off the underrider together with the front grille.
4. Repeat operation 2 to remove the second underrider.

Refitting

5. Reverse instructions 1 to 4.

OVERRIDER – FRONT – (USA MODELS)

– Remove and refit **76.22.01**

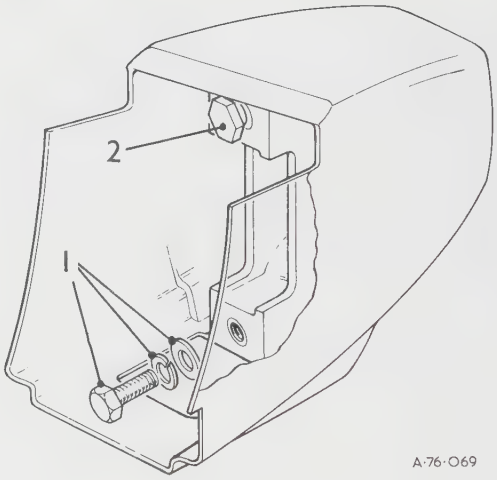

Removing

1. Working beneath the overrider remove the bolt, spring washer and plain washer.
2. Raise the bonnet and from inside the engine compartment, unclip the overrider from the bumper bracket.

Refitting

3. Reverse instructions 1 to 4.

OVERRIDER – REAR – (USA MODELS)

– Remove and refit **76.22.02**

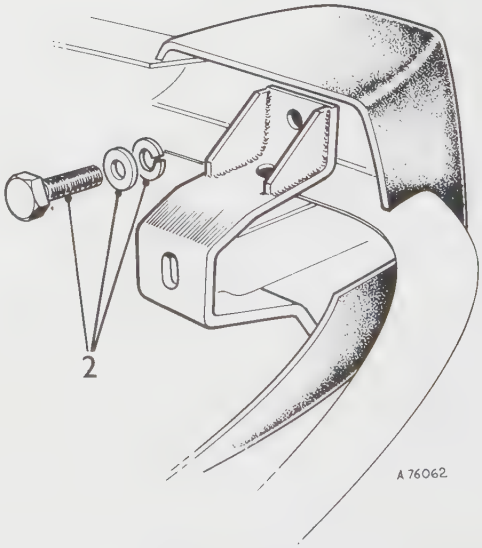

Removing

1. Remove the rear bumper. 76.22.15.
2. Remove one bolt, spring washer and plain washer and detach the overrider from the shock absorber bracket.

Refitting

3. Reverse instructions 1 and 2.

BUMPER – FRONT

– Remove and refit 76.22.08

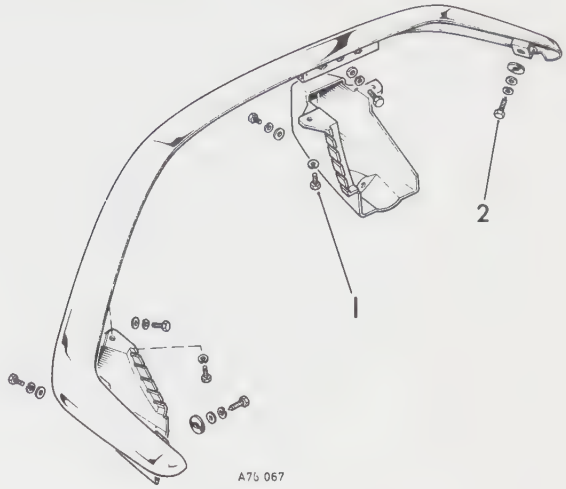

Removing

1. Remove the underriders/overriders. 76.22.01.
2. Raise the bonnet and remove the four bolts, spring washers and plain washers.
3. Lower the bonnet and lift off the bumper.

Refitting

4. Reverse instructions 1 to 3.

BUMPER – REAR (EXCEPT USA MODELS)

– Remove and refit 76.22.15

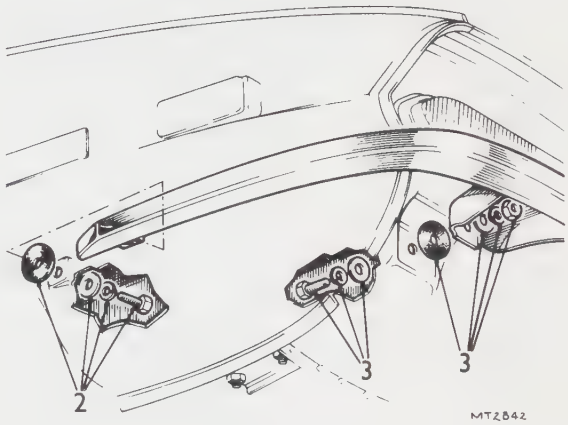

Removing

1. Disconnect the two number plate lamp leads. 86.40.86. Operation 1.
2. Remove the two bolts, spring washers and plain washers.
3. Remove the two nuts, bolts, spring washers and plain washers, and lift off the bumper.

Refitting

4. Reverse instructions 1 to 3.

BUMPER – REAR (USA MODELS)

– Remove and refit 76.22.15

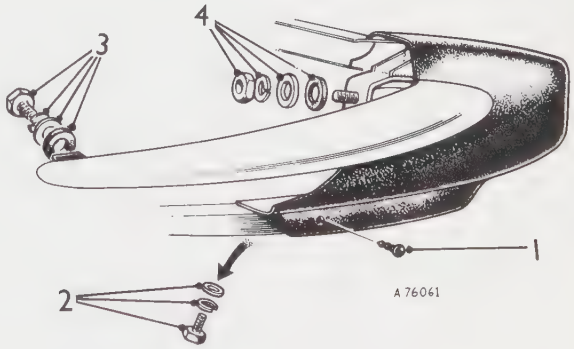

Removing

1. Detach the two plastic retainers securing the overriders to the chassis.
2. Remove the two bolts, spring washers and plain washers securing the overriders to the chassis.
3. Remove the two bolts, spring washers and plain washers.
4. Remove the two nuts, spring washers and plain washers and lift off the bumper and overrider assembly.
5. Remove the overriders if necessary. 76.22.01.

Refitting

6. Reverse instructions 1 to 5, ensuring that the rubber washers are correctly positioned between the bumper and overrider assembly and the body.

GEARBOX TUNNEL COVER

– Remove and refit **76.25.07**

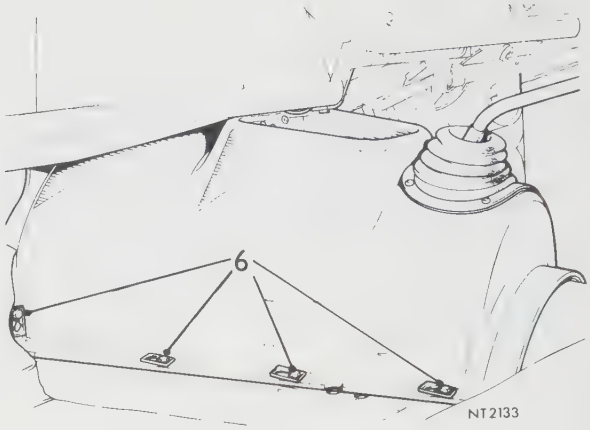

Removing

1. Remove the gear lever knob. 37.16.05 instruction 1.
2. Remove the transmission tunnel trim pads (if fitted). 76.13.06.
3. Remove the fascia support bracket. 76.46.09.
4. Remove the gearbox cover carpet. 76.49.01.
5. Remove the gear lever. 37.16.04.
6. Remove the ten screws securing the gearbox cover to the floor.
7. Remove the gearbox cover.

Refitting

8. Reverse instructions 1 to 7.

DOOR

– Remove and refit **76.28.01**

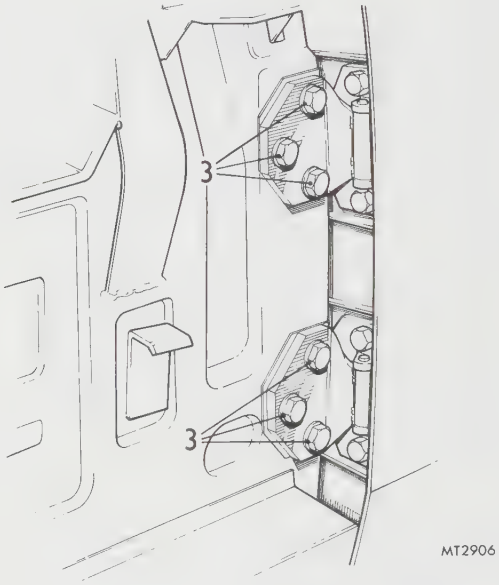

Removing

1. Isolate the battery.
2. Drill out the rivet securing the check strap.
3. Support the door and remove six bolts, spring washers and plain washers.

Refitting

4. Reverse instructions 1 to 3. Check door closing action and adjust if necessary.

DOOR HINGES

– Remove and refit **76.28.42**

Removing

1. Remove the door. 76.28.01.
2. Remove the four bolts, spring washers and plain washers.
3. Remove the two screws and lift off the hinges.

Refitting

4. Reverse instructions 1 to 3. Check door closing action and adjust if necessary.

DOOR GLASS

– Remove and refit 76.31.01

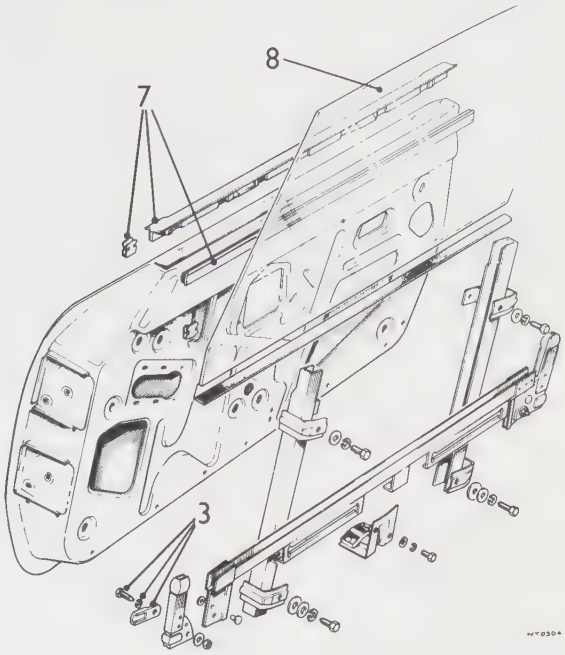

Removing

1. Remove the trim pad. 76.34.01.
2. Remove the spring.
3. Remove the guide packing pieces – two bolts and spring washers.
4. Prise off the two stud retainers and washers securing the regulator arms to the glass frame.
5. Support the glass and detach the regulator arms from the frame.
6. Lower the glass.
7. Detach the inner and outer door waist seals from the clips.
8. Lift out the glass, taking care to avoid scratching it on the seal clips.

Refitting

9. Reverse instructions 1 to 8.

DOOR GLASS REGULATOR

– Remove and refit 76.31.45

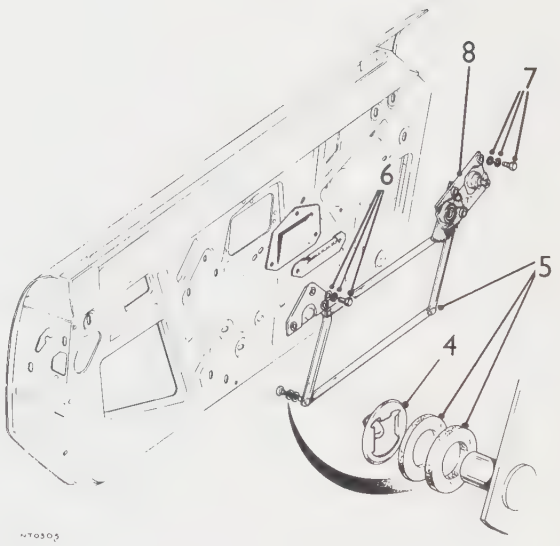

Removing

1. Remove the trim pad. 76.34.01.
2. Remove the spring and loosely refit the regulator handle.
3. Raise the door glass and retain it with a small rubber wedge.
4. Detach the regulating arms by prising off the retainer studs.
5. Remove the inter-connecting link and four leather washers.
6. Remove the three bolts, spring washers and plain washers.
7. Remove the four bolts, spring washers and plain washers.
8. Carefully withdraw the regulator assembly.

Refitting

9. Reverse instructions 1 to 8.

DOOR TRIM PAD

– Remove and refit **76.34.01**

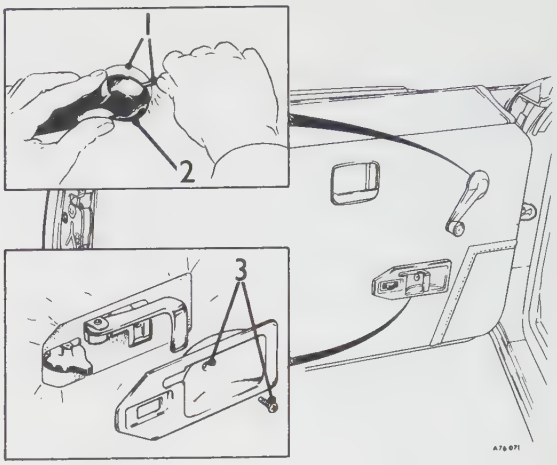

Removing

1. Depress the bezel and press out the pin.
2. Remove the handle and bezel.
3. Remove the handle plate – 1 screw.
4. Prise off the trim pad – 21 clips.

Refitting

5. Reverse instructions 1 to 4.

DOOR LOCK

– Remove and refit **76.37.12**

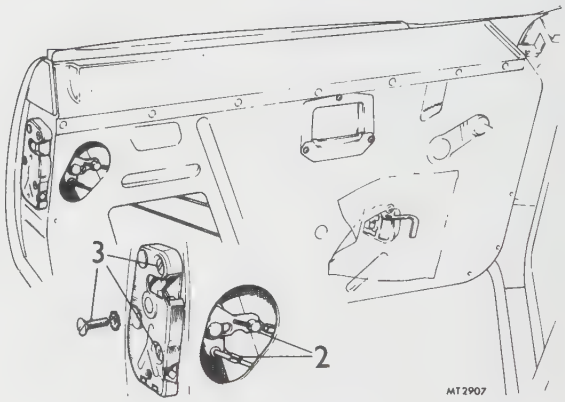

Removing

1. Remove the trim pad. 76.34.01.
2. Release the two linkages.
3. Remove the three screws.
4. Release the linkage.
5. Remove the door lock.

Refitting

6. Reverse instructions 1 to 5.

DOOR LOCK STRIKER

– Remove and refit 76.37.23

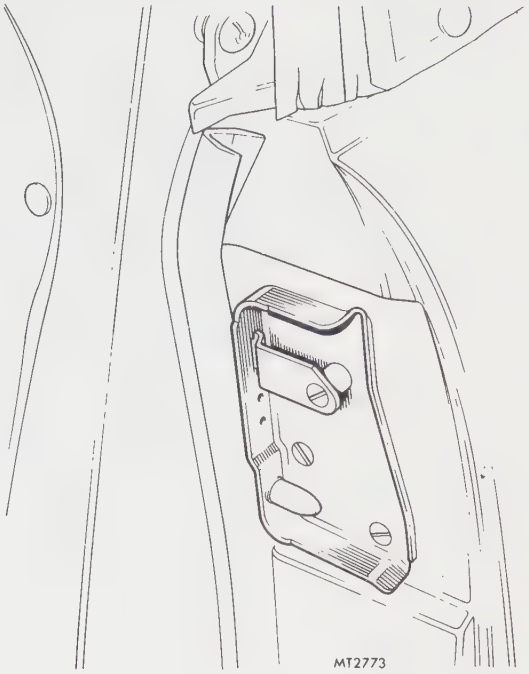

Removing

1. Remove the three screws and lift off the striker.

Refitting

2. Reverse instruction 1, adjusting if necessary to ensure correct door locking action.

DOOR LOCK REMOTE CONTROL

– Remove and refit 76.37.31

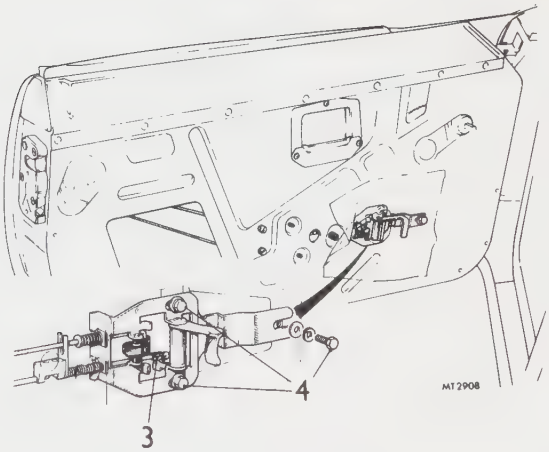

Removing

1. Remove the trim pad. 76.34.01.
2. Remove the foam rubber pad.
3. Detach the clip from the control rod.
4. Remove the three bolts, spring washers and plain washers.
5. Disconnect the control rod from the locking lever.
6. Remove the remote control.

Refitting

7. Reverse instructions 1 to 6, adjusting if necessary to ensure correct operation.

PRIVATE LOCK

– Remove and refit **76.37.39**

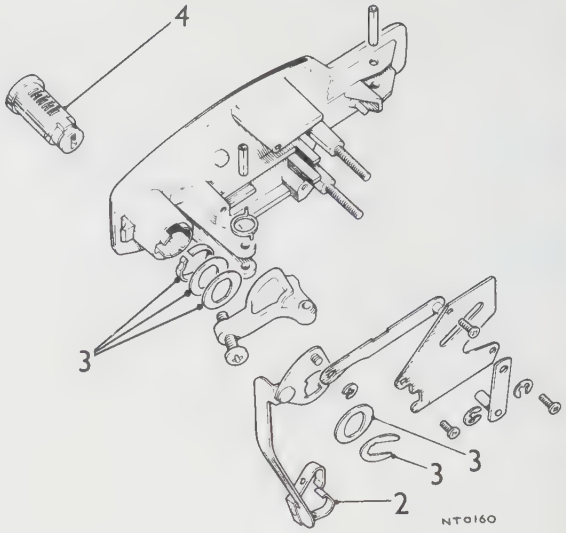

Removing

1. Remove the door handle. 76.58.01.
2. Remove the spring clip.
3. Remove the plain washers and waved washer securing the pivot bracket.
4. Push out the lock.

Refitting

5. Reverse instructions 1 to 4.

DOOR CHECK STRAP

– Remove and refit **76.40.27**

Removing

1. Isolate the battery.
2. Drill out the rivet.
3. Pull back the dash side carpet and withdraw the check strap.

Refitting

4. Reverse instructions 1 to 3.

FASCIA – DRIVER'S SIDE

– Remove and refit **76.46.01**

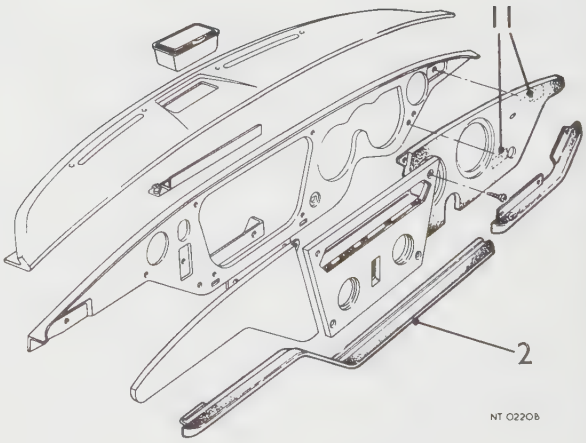

Removing

1. Isolate the battery.
2. Remove the longer of the two lower padding assemblies – 4 screws and plain washers.
3. Lower the centre fascia to the service position. 76.46.02 instructions 1 to 4.
4. Remove the speedometer. 88.30.01.
5. Remove the hazard warning switch. 86.65.50.
6. Pull out the hazard warning light bulb holder (if fitted).
7. Remove the tachometer. 88.30.21.
8. Remove the mixture control inner cable and bezel (if fitted). 19.20.13, instructions 1 to 3.
9. Remove the wiper switch. 86.65.38.
10. Pull out the turn signal bulb holder.
11. Remove the two nuts, spring washers and plain washers from the rear of the fascia.

Refitting

12. Reverse instructions 1 to 11.

FASCIA – CENTRE

– Remove and refit 76.46.02

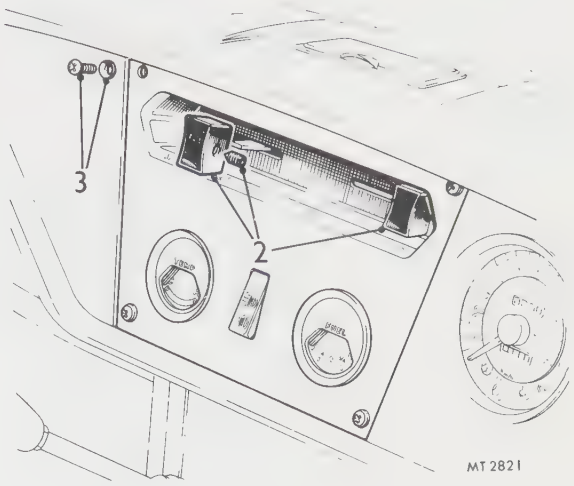

Removing

1. Isolate the battery.
2. Slacken the two grub screws and pull off the heater control knobs.
3. Remove the four screws and cup washers.
4. Lower the centre fascia to the service position.
5. Pull out the panel light bulb holders.
6. Pull out the warning light bulb holders.
7. Disconnect the seven Lucar connectors.
8. Remove the centre fascia from the vehicle.

Refitting

9. Reverse instructions 1 to 8.

FASCIA – PASSENGER'S SIDE

– Remove and refit 76.46.03

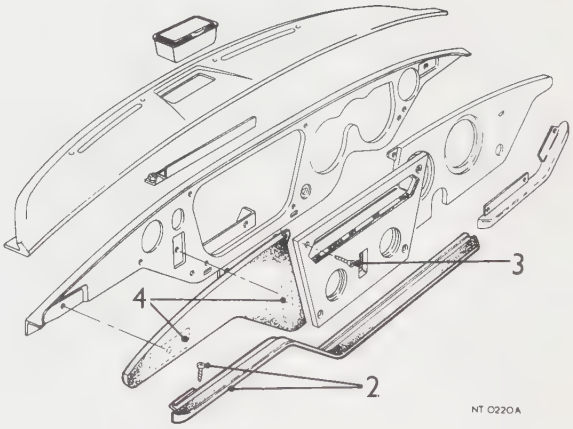

Removing

1. Remove the cigar lighter (if fitted). 86.65.60.
2. Remove the fascia padding – four screws and plain washers.
3. Remove one screw.
4. Remove the two nuts, spring washers and plain washers from the rear of the fascia.
5. Lift off the fascia.

Refitting

6. Reverse instructions 1 to 5.

FASCIA CRASH PAD

– Remove and refit 76.46.04

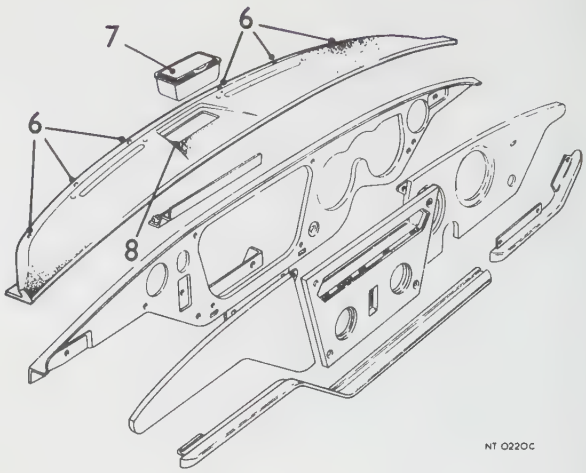

Removing

1. Remove the centre fascia. 76.46.02.
2. Remove the driver's side fascia. 76.46.01.
3. Remove the passenger's side fascia. 76.46.03.
4. Remove the two bolts, spring washers, plain washers and spacers, securing the air flow control to the fascia bracket.
5. Remove the four nuts, plain washers and spring washers securing the demister vents to the body. Remove the demister vents.
6. Remove the six nuts, plain washers and spring washers securing the crash pad to the body.
7. Pull out the ash tray bowl.
8. Straighten the tags securing the ash tray retainer to the body. Lift out the retainer.
9. Carefully raise the crash pad to free the studs from the body. Lift out the crash pad.

Refitting

10. Reverse instructions 1 to 9.

FASCIA SUPPORT BRACKET

– Remove and refit 76.46.09

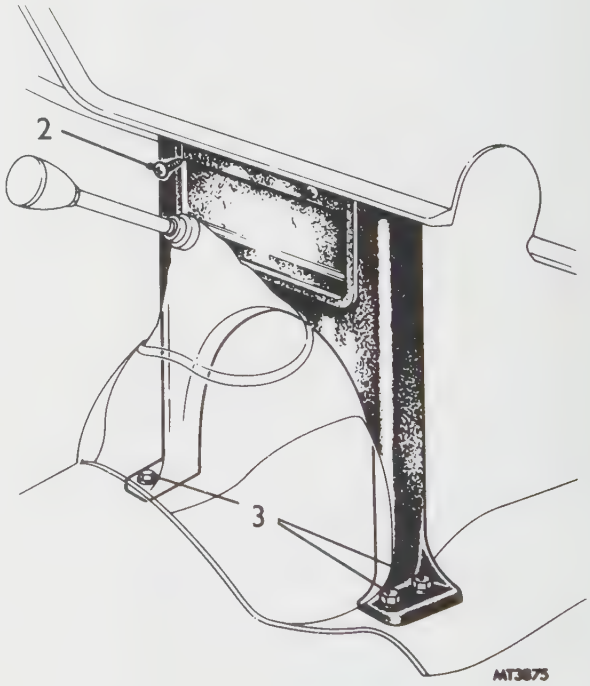

Removing

1. Remove the transmission tunnel trim pads (if fitted). 76.13.06.
2. Remove the two screws holding the support bracket to the fascia support rail.
3. Remove the four bolts holding the fascia support bracket to the floor.
4. Remove the fascia support bracket.

Refitting

5. Reverse instructions 1 to 4.

CARPET – GEARBOX COVER

– Remove and refit 76.49.01

Removing

1. Remove the gear lever knob.
2. Remove the transmission tunnel trim pads (if fitted). 76.13.06.
3. Remove the fascia support bracket. 76.46.09.
4. Remove the carpet.

Refitting

5. Reverse instructions 1 to 4.

CARPET – REAR

– Remove and refit 76.49.03

Removing

1. Remove the seats. 76.70.04/76.70.05.
2. Remove the seat belt buckle units – two bolts and spring washers. (Refer to operation 86.65.31/2 for USA vehicles.)
3. Remove the seat belt anchor brackets – two bolts.
4. Remove the transmission tunnel trim pads (if fitted). 76.13.06.
5. Remove the arm rest (if fitted). 76.13.21.
6. Disconnect the four fasteners at the front, pull the rear edge away from the retainer strip and lift the carpet clear of the handbrake lever.

Refitting

7. Reverse instructions 1 to 6.

FRONT GRILLE

– Remove and refit 76.55.03

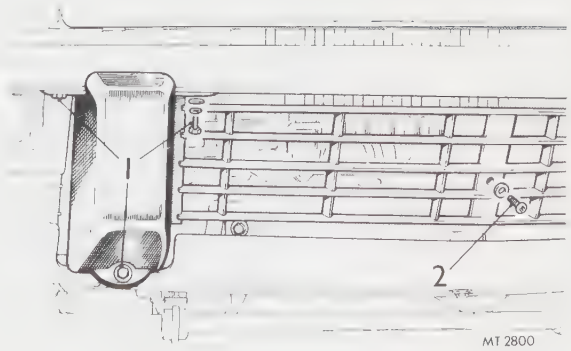

Removing

1. Remove one underrider/overrider (either side). 76.22.01.
2. Remove one screw and plain washer.
3. Carefully disengage the grille from the second underrider.

Refitting

4. Reverse instructions 1 to 3.

DOOR HANDLE

– **Remove and refit** **76.58.01**

Removing

1. Fully raise the glass.
2. Remove the trim pad. 76.34.01.
3. Remove the spring and the foam pad.
4. Remove the two nuts and plain washers and withdraw the clamping bracket.
5. Disconnect the door lock control rod from the spring clip and carefully withdraw the handle and the seating gasket.

Refitting

6. Reverse instructions 1 to 5.

DOOR PULL

– **Remove and refit** **76.58.25**

Removing

1. Remove the trim pad. 76.34.01.
2. Remove the escutcheon – two screws and spring washers.
3. Remove the backing plate – one screw and spring washer.

Refitting

4. Reverse instructions 1 to 3.

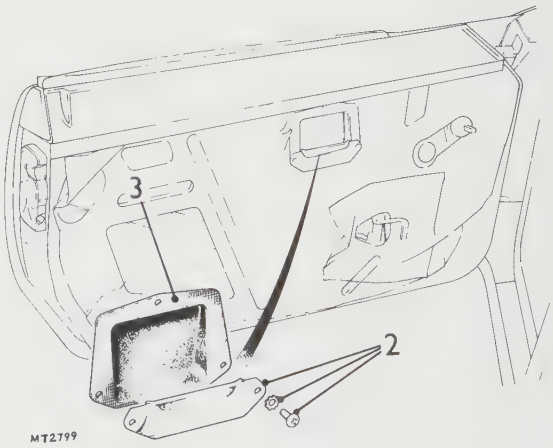

HARD TOP

– Remove and refit **76.61.01**

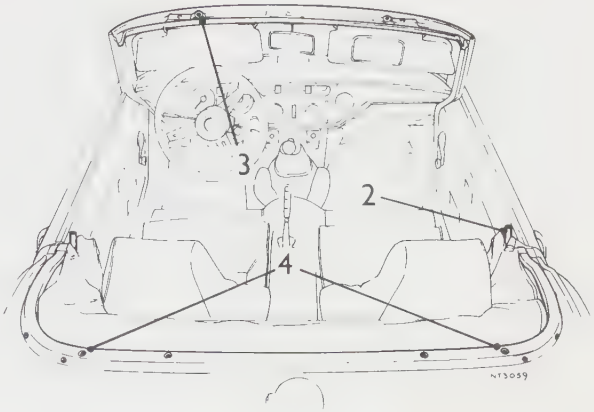

Removing

1. Disconnect the three fasteners securing the hood stowage cover to the rear deck.
2. Remove the two domed-head bolts, spring washers and plain washers.
3. Remove the two domed-head bolts, spring washers and plain washers.
4. Remove the two bolts and plain washers.
5. With the aid of an assistant, carefully lift the hardtop from the car.

Refitting

6. Reverse instructions 1 to 5. Ensure that the distance tubes are located in the windscreen header rail.

HOOD

– Remove and refit **76.61.08**

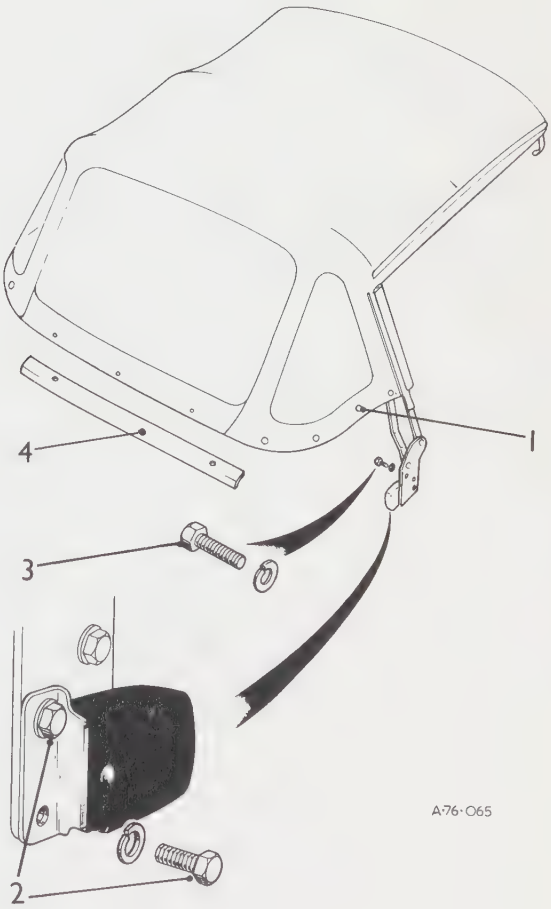

Removing

1. Disconnect the eight fasteners.
2. Remove the four bolts, spring washers and plain washers securing the hinges (and seat belt tongue stowage brackets, if fitted).
3. Remove the two bolts, spring washers and plain washers securing the hinges.
4. Remove the four domed head bolts, spring washers and plain washers securing the hood retainer and hood.
5. Lift off the hood.

Refitting

6. Reverse instructions 1 to 5.

PARCEL SHELF

– Remove and refit – Driver's side 76.67.04
– Passenger's side 76.67.05

Removing

1. Remove the two screws.
2. Remove the two nuts, bolts and plain washers.
3. Lift out the parcel shelf.

Refitting

4. Reverse instructions 1 to 3.

ASHTRAY–FRONT

– Remove and refit 76.67.13

Removing

1. Lever the ashtray out of the mounting bracket.
2. Straighten the legs on the mounting bracket and pull the bracket clear.

Refitting

3. Place the bracket in the ashtray aperture.
4. Bend the bracket legs to secure the mounting bracket in the fascia.
5. Refit the ashtray.

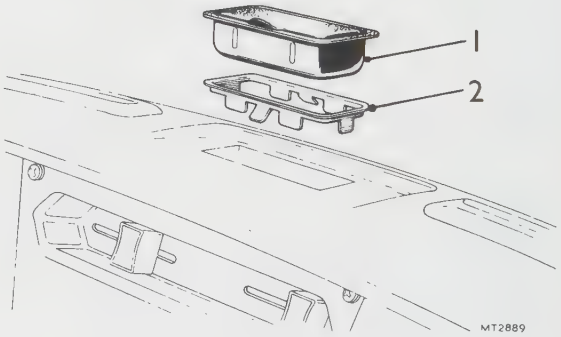

SEAT CUSHION COVER

– Remove and refit 76.70.02

Removing

1. Remove the seat(s). 76.70.04/76.70.05.
2. Remove the cushion cover – 32 hog rings.

Refitting

3. Reverse instructions 1 and 2.

SEAT SQUAB COVER

– Remove and refit 76.70.03

Removing

1. Remove the seat(s). 76.70.04/76.70.05.
2. Remove the seat back adjuster handle – 1 screw and spring washer.
3. Remove the squab cover, 11 clips.

Refitting

4. Reverse instructions 1 to 3.

SEATS

– Remove and refit – Driver's seat 76.70.04
– Passenger's seat 76.70.05

Removing

1. Disconnect the seat belt warning switch harness plug (if fitted).
2. Move the seat fully forward.
3. Remove the two bolts and spring washers.
4. Move the seat fully rearward.
5. Remove the two bolts and spring washers.
6. Lift out the seat complete with runners.

Refitting

7. Ensure that the packing washers are correctly positioned.
8. Reverse instructions 1 to 6.

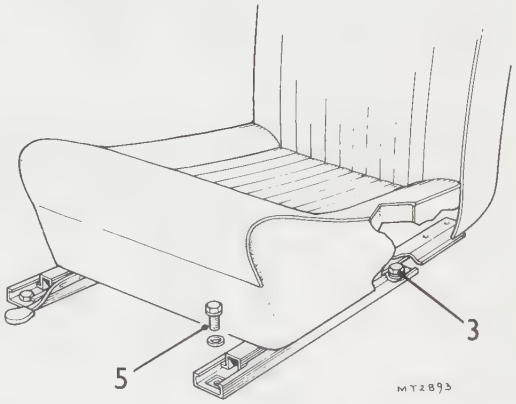

SEAT RUNNERS

– Remove and refit 76.70.21

Removing

1. Remove the seat. 76.70.04/76.70.05.
2. Detach the runners – two nuts, bolts and four plain washers.

Refitting

3. Reverse instructions 1 and 2.

SEAT SQUAB CATCH

– Remove and refit 76.70.27

The seat squab catch is secured to the seat frame by two screws, spring washers and plain washers.

SEAT BELTS – STATIC

– Remove and refit 76.73.02

Removing

1. Isolate the battery.
2. Remove the buckle unit. 86.65.31/2.
3. Remove the bolt, spring washer and plain washer securing the anchor bracket to the floor.
4. Remove the cap, bolt, plain washer, cover and spacer securing the swivel bracket to the wheel arch.
5. Remove the stowage brackets if necessary by removing two bolts, spring washers and plain washers.

Refitting

6. Reverse instructions 1 to 5, ensuring that the swivel brackets are left free to swivel.

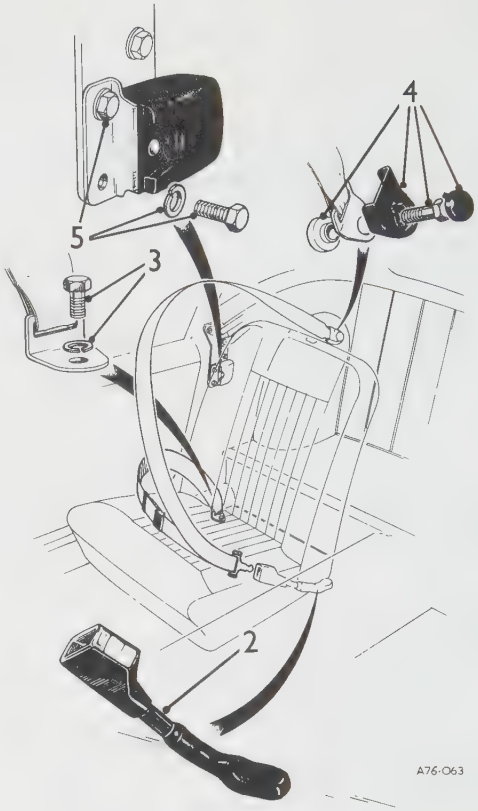

SEAT BELTS – AUTOMATIC

– Remove and refit 76.73.10

Removing

1. Isolate the battery.
2. Remove the buckle unit. 86.65.31/2.
3. Remove the bolt securing the anchor bracket to the floor.
4. Remove the bolt, plain washer, and spacer securing the swivel bracket to the wheelarch.
5. Remove the bolt securing the reel to the body.

Refitting

6. Reverse instructions 1 to 5, ensuring that the swivel brackets are left free to swivel.

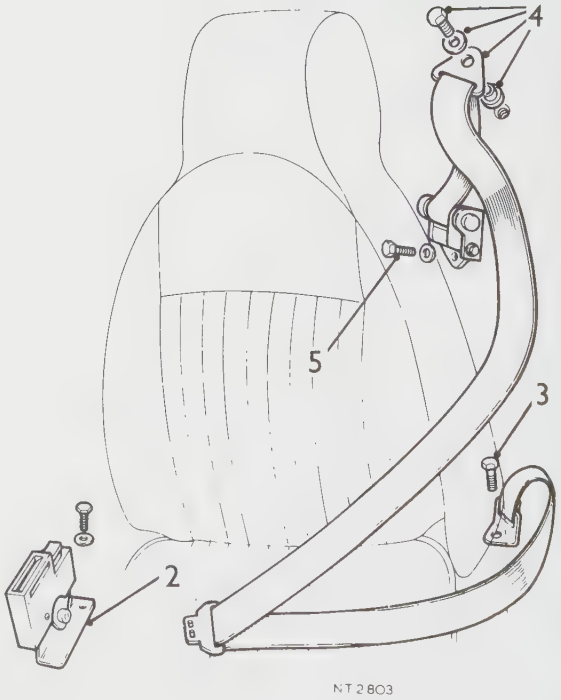

VALANCE – ENGINE – L.H.

– Remove and refit 76.79.07

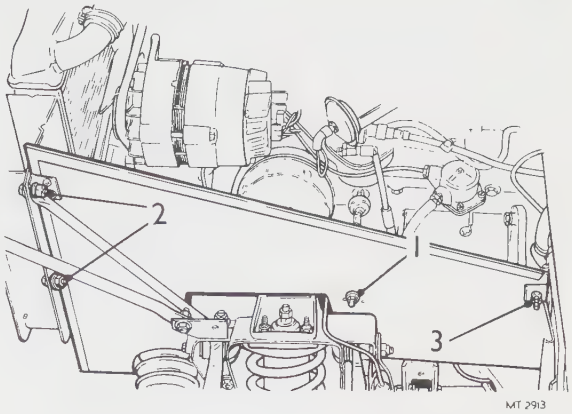

Removing

1. Remove one nut, bolt, spring washer and plain washer securing the cable harness clip to the valance.
2. Remove the two nuts, bolts, spring washers and plain washers.
3. Remove the two screws and reinforcing plate.

Refitting

4. Reverse instructions 1 to 3.

VALANCE – ENGINE – R.H.

– Remove and refit 76. 79.08

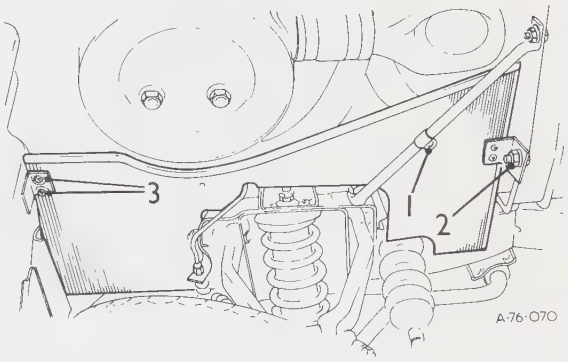

Removing

1. Remove the nut, bolt, spring washer and plain washer securing the support stay clip to the valance.
2. Remove the nut, bolt, spring washer, and plain washer.
3. Remove the two screws, nuts, spring washers and reinforcing plate.

Refitting

4. Reverse instructions 1 to 3.

WINDSCREEN

– Remove and refit **76.81.01**

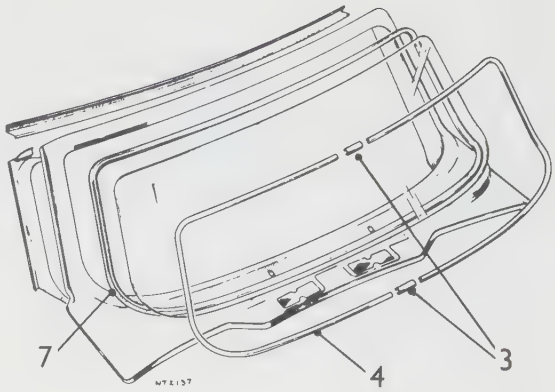

Removing

1. Remove the wiper arms. 84.15.01.
2. Remove the interior mirror – two screws.
3. Push the finisher covers to one side to expose the joints, using a suitable piece of wood.
4. Carefully ease the finishers from the weatherstrip.
5. Break the seal, using a suitable blunt tool.
6. Push the glass outwards.

CAUTION: Take care to avoid scratching the glass.

7. Remove the weatherstrip.

Refitting

8. Clean all traces of old sealing compound from the screen aperture flange, using petrol or white spirit.
9. Apply Seelastik SR51 to the glass channel and fit the weatherstrip to the screen.
10. Insert a strong cord into the weatherstrip inner channel allowing the ends to protrude from the lower edge.
11. Have an assistant position the glass centrally in the aperture and maintain a steady pressure whilst the cord ends are pulled to locate the weatherstrip on the body flange.
12. Seal the outer channel of the weatherstrip to the body using Seelastik SR51.
13. Sparingly apply rubber grease or soap/water solution to the weatherstrip finisher recess.
14. Assemble the two finisher covers to the left hand finisher.
15. Fit the finishers using the special tool as follows:
    a. Locate the tool in the recess with open end uppermost and in a vertical position.
    b. Keeping the hook firmly engaged in the recess, draw the tool along to engage the inner flange of the weatherstrip with the finisher.
16. Push the cover finishers centrally over the joins.
17. Fit the interior mirror and wiper arms.

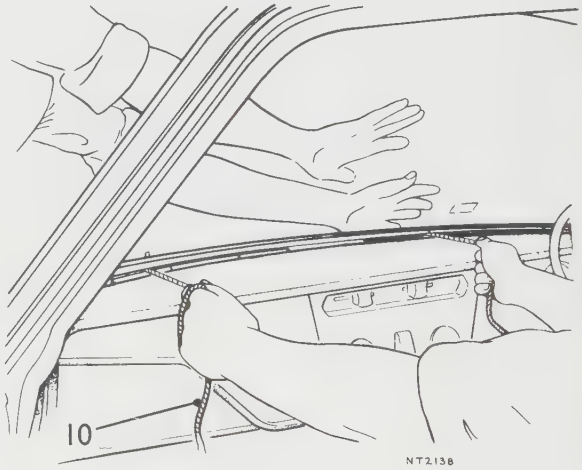

FINISHER STRIP INSERTION TOOL

To fabricate finisher strip insertion tool.

1. Shape a piece of mild steel rod as shown, paying particular attention to the form of the tip. Ensure that the tip is fully rounded and free from burrs.
2. Braze the hook into a metal stock.
3. Fit stock into a file handle and secure with a rivet.

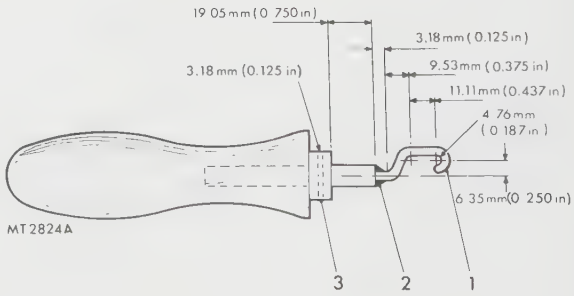

HEATING AND VENTILATION OPERATIONS

Air flow control cable – remove and refit 80.10.06

Air flow control - remove and refit 80.10.09

Fan motor – remove and refit 80.20.15

Heater unit remove and refit 80.20.01

Water hose
– water valve to heater remove and refit 80.25.09
– heater to water pipe – remove and refit 80.25.10

Water valve
– control -- remove and refit 80.10.10
control cable remove and refit 80.10.07
remove and refit 80.10.16

AIR FLOW CONTROL CABLE

– Remove and refit **80.10.06**

Removing

1. Remove the air flow control. 80.10.09.
2. Slacken the trunnion bolt and clamp bolt securing the cable to the heater unit. Remove the cable.

Refitting

3. Reverse instructions 1 and 2.

WATER VALVE CONTROL CABLE

– Remove and refit **80.10.07**

Removing

1. Remove the water valve control. 80.10.10.
2. Slacken the trunnion bolt and clamp bolt securing the cable to the water valve. Remove the cable.

Refitting

3. Reverse instructions 1 and 2.

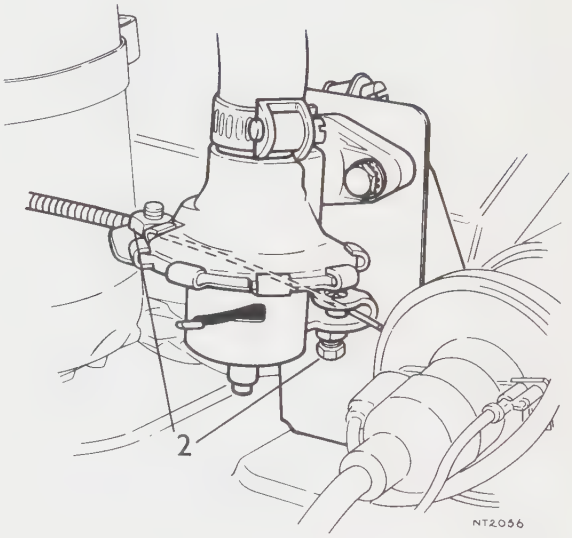

AIR FLOW CONTROL

– Remove and refit **80.10.09**

Removing

1. Lower the centre fascia to the service position 76.46.02. Operations 1 to 4.
2. Remove the two bolts, spring washers, plain washers and spacers securing the control to the fascia bracket.
3. Pull out the snap connector and disconnect the Lucar connector from the fan switch.
4. Slacken the trunnion screw and the cable clamp bolt. Detach the cable from the control.

Refitting

5. Ensure that the control cable is positioned to allow full operation of the flap valve.
6. Reverse instructions 1 to 4.

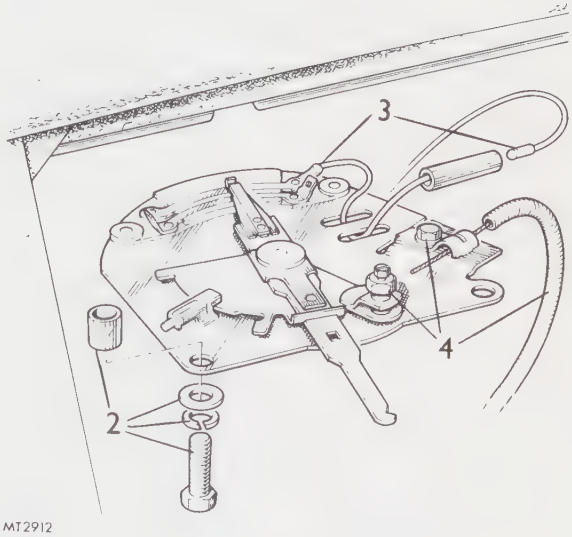

WATER VALVE CONTROL

– Remove and refit **80.10.10**

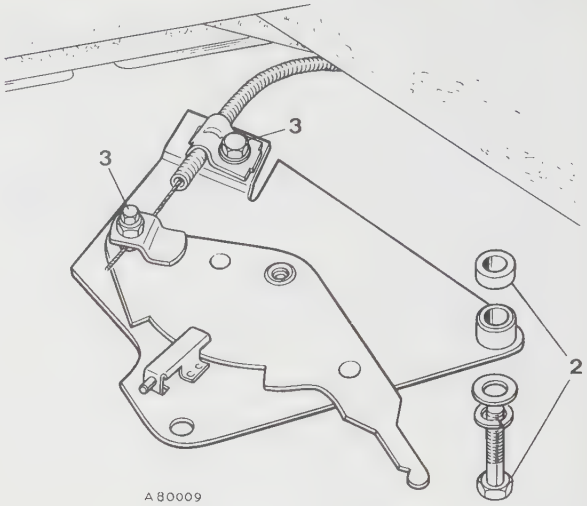

Removing

1. Lower the centre fascia to the service position 76.46.02. Operations 1 to 4.
2. Remove the two bolts, spring washers, plain washers, and the thick and thin spacers securing the control to the fascia bracket.
3. Slacken the trunnion screw and the cable clamp bolt. Detach the cable from the control.

Refitting

4. Ensure that the control cable is positioned to allow full operation of the water valve.
5. Reverse instructions 1 to 3.

WATER VALVE

– Remove and refit **80.10.16**

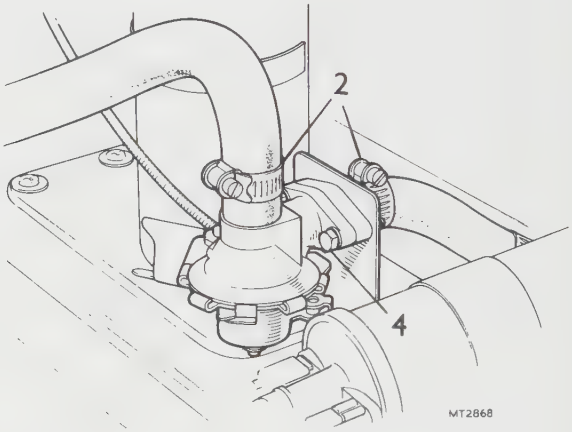

Removing

1. Drain the cooling system.
2. Slacken the clips and disconnect the two hoses.
3. Slacken the trunnion screw and cable clamp bolt. Detach the control cable.
4. Remove the two nuts, bolts, spring washers and plain washers, securing the water valve to the bracket.

Refitting

5. Reverse instructions 1 to 4 ensuring that the control cable is positioned to allow full operation of the water valve.

HEATER UNIT

– Remove and refit **80.20.01**

Removing

1. Isolate the battery.
2. Drain the cooling system.
3. Slacken the two clips and disconnect the water hoses. Place one hose in a container and blow down the other to clear the coolant from the heater matrix. Remove the hoses.
4. Remove the passengers side parcel shelf. 76.67.05.
5. Lower the centre fascia to the service position. 76.46.02. Instructions 1 to 4.
6. Remove the air flow control. 80.10.09.
7. Remove the air flow control cable. 80.10.06.
8. Disconnect the Lucar connector from the left hand side of the fan motor.
9. Remove the passengers side demister hose – 2 clips.
10. Slacken the clip and disconnect the drivers side demister hose from the heater unit.
11. Push the screen washer tubing aside.
12. Remove the four set screws, lock washers and 'D' washers.
13. Pull the heater unit clear and remove it from the vehicle at the passengers side.

Refitting

14. Apply Seelastik S.R.51 to all mating surfaces of the heater pipe and fan aperture seals. Ensure that seals are correctly positioned.
15. Install the heater unit and replace the four set screws, lock washers and 'D' washers, with the aid of an assistant.
16. Reverse instructions 1 to 11.

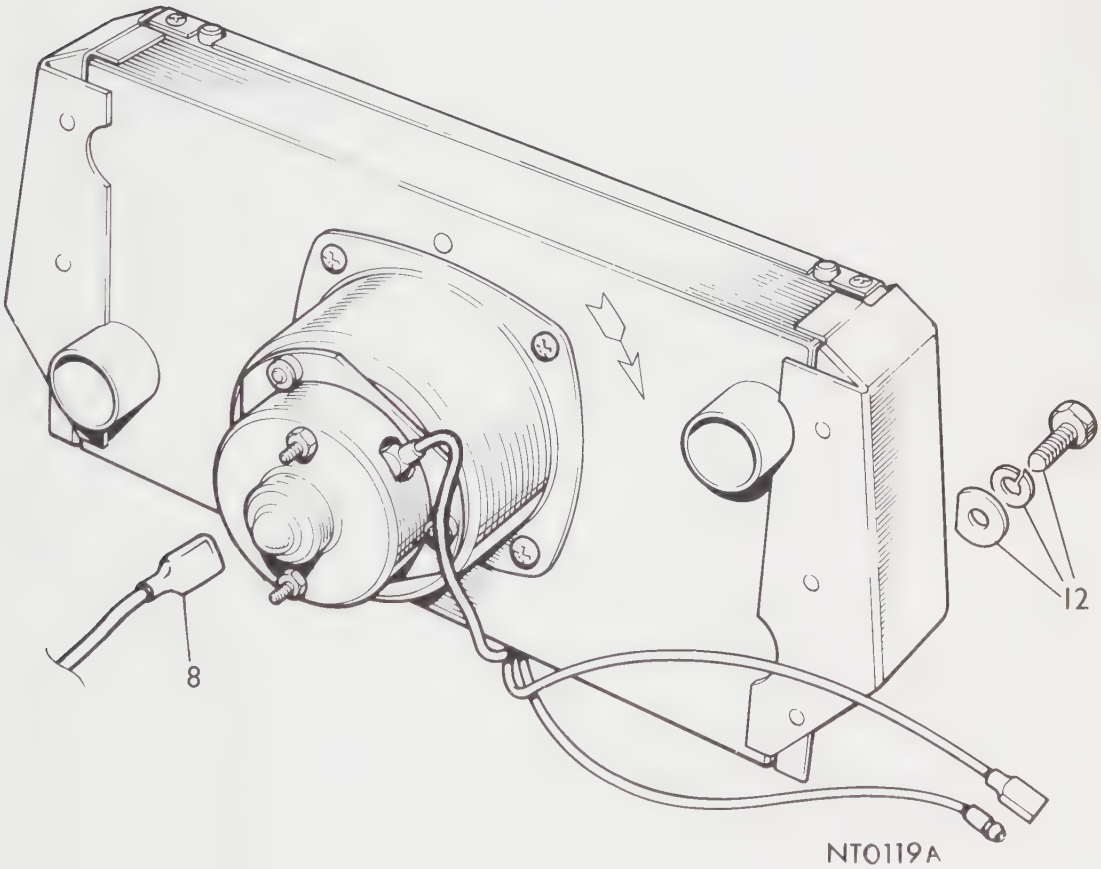

FAN MOTOR

– Remove and refit **80.20.15**

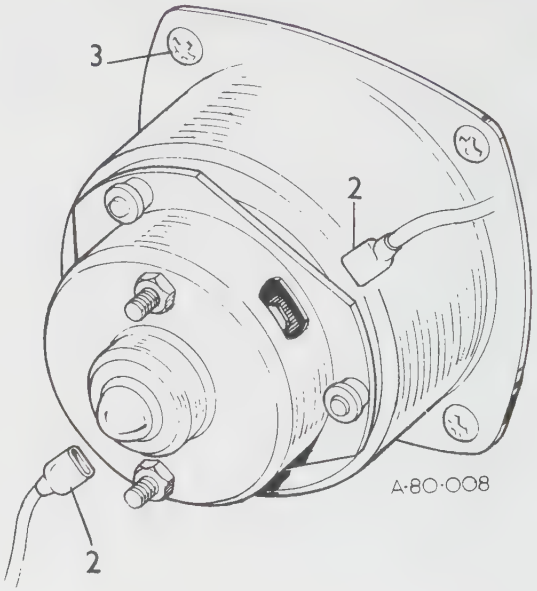

Removing

1. Lower the centre fascia to the service position 76.46.02. Operations 1 to 4.
2. Disconnect the two Lucar connectors from the fan motor.
3. Remove the four screws.
4. Manoeuvre the fan motor clear of the heater unit and remove it from the vehicle on the drivers side.
5. Detach the impellor from the shaft, using a screwdriver to release the retaining clip.

Refitting

6. Refit the impellor, ensuring that 6 mm (¼ in) clearance exists between the base of the impellor and the motor.
7. Reverse instructions 1 to 4.

WATER HOSES

– Remove and refit

– water valve to heater	**80.25.09**
– heater to water pipe	**80.25.10**

The heater water hoses are each secured by two clips.
Drain the cooling system before removal.

WINDSCREEN WIPERS AND WASHERS OPERATIONS

Windscreen washer system
- jet – remove and refit 84.10.09
- pump – remove and refit 84.10.21
- reservoir – remove and refit 84.10.01

Windscreen wiper system
- data and description 84.15.00
- motor – overhaul 84.15.18
- motor – remove and refit 84.15.12
- rack – remove and refit 84.15.24
- wheelbox – left hand – remove and refit 84.15.28
- wheelbox – right hand – remove and refit 84.15.29
- wiper arm – remove and refit 84.15.01
- wiper blade – remove and refit 84.15.05

NOTE: On U.S.A. models a non return valve is fitted into the windscreen washer system.
It is located between the pipe from the washer pump and the 'T' piece connecting the pipes from the washer jets.
If it is necessary to disturb or replace the non return valve, care must be taken to re-connect it correctly otherwise the washers will fail to function.

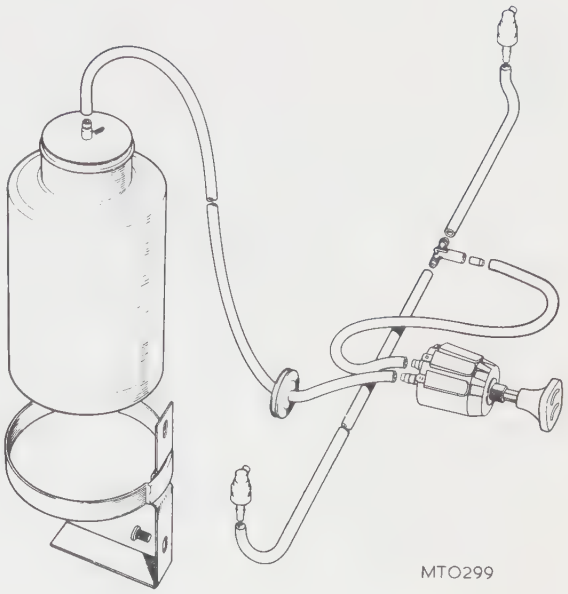

WINDSCREEN WASHER RESERVOIR

– Remove and refit 84.10.01

Removing

1. Unscrew the top and pull off the pipe.
2. Manoeuvre the bottle upwards from the carrier.

Refitting

3. Reverse instructions 1 and 2.

WINDSCREEN WASHER JET

– Remove and refit 84.10.09

Removing

1. Pull the tubing from the jet.
2. Remove the nut and washer.
3. Withdraw the jet.

Refitting

4. Reverse instructions 1 to 3.

WINDSCREEN WASHER PUMP

– Remove and refit 84.10.21

The manual washer pump and electrical wiper switch is a single integral unit. For removing and refitting refer to 86.65.38.

WINDSCREEN WIPER SYSTEM

– Data and description 84.15.00

Motor:

Manufacturer	Lucas
Type	14W
Lucas part No: motor minus gear assembly	75664
gear assembly – normal	54702581
– U.S.A.	54702582
Triumph part No: motor minus gear assembly	517621
gear assembly	520101
Running current – after 60 seconds from cold with connecting rod removed:	
Normal speed	1.5 amp
High speed	2.0 amp
Running speed – final gear after 60 seconds from cold with connecting rod removed:	
Normal speed	46 to 52 rev/min
High speed	60 to 70 rev/min
Armature end float	0.05 to 0.20 mm (0.002 to 0.008 in)
Brush length – new	6 mm (0.250 in)
renew if less than	3 mm (0.125 in)
	For high speed brush this is when narrow section is worn into full width section.
Brush spring pressure – when compressed so brush bottom is aligned with brushbox slot end	140 to 200 g (5 to 7 oz)
Maximum permissible force to move cable rack in tubing – arms and blades removed	3 kg (6 lb)

The unit consists of a two speed permanent-magnet motor and a gearbox unit which drives a cable rack mechanism. Rotation of the motor armature is converted to a reciprocating motion of the cable rack by a single stage worm and gear, a connecting rod and a cross-head contained in a guide channel.

Two speed operation is provided by a third bush. When high speed is selected the positive supply is transferred from the normal speed brush to the high speed brush.

A switching feature stops the blades in the park position irrespective of their position when the fascia switch is selected off. This is effected by a two stage limit switch unit attached to the gearbox. The contacts are actuated by a cam on the final gear.

When the fascia switch is selected off, the motor will continue to run until the limit switch first stage contacts open. A momentary period follows during which no contact is made. The second stage contacts then close causing regenerative braking of the armature which maintains constant parking of the blades.

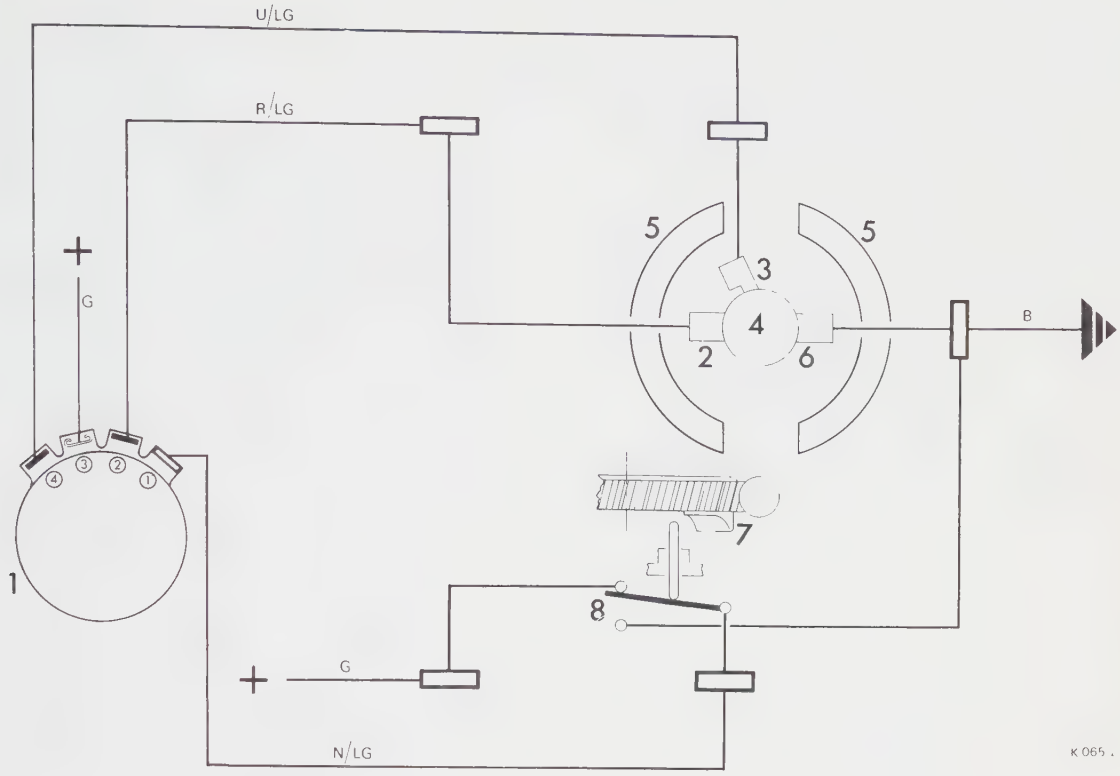

Supply

1. Fascia switch

OFF	1 to 2
NORMAL	3 to 2
HIGH	3 to 4

2. Normal speed brush
3. High speed brush
4. Commutator
5. Permanent magnet
6. Earth brush
7. Final gear cam
8. Limit switch unit

WINDSCREEN WIPER ARM

– **Remove and refit** 84.15.01

Removing

1. Lift the wiper arm and blade from the screen.
2. Position a screwdriver as shown and impart a twisting action to lift the clip from the spindle groove.
3. The assembly may now be removed by hand.

Refitting

4. Ensure that the spindles are in the 'park' position.
5. Located the wiper arm splines on the spindle splines such that the wiper arm position complies with the dimensions shown.
6. Push the wiper arm onto the spindle to engage the splines
7. Wet the windscreen, using the screenwasher, and operate the wipers, allowing them to come to rest in the 'park' position.
8. Recheck the wiper arm final position with the dimensions shown.

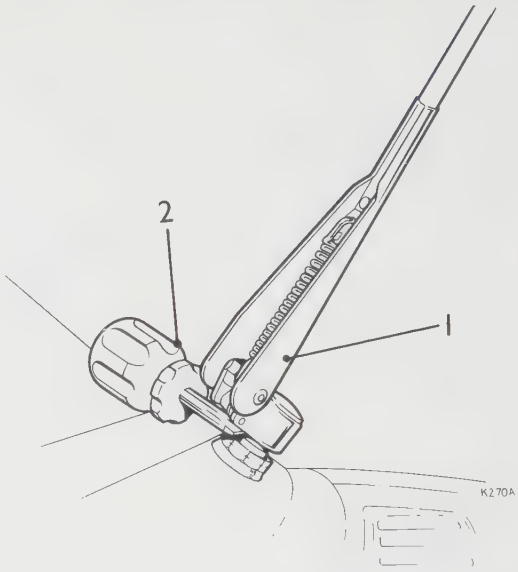

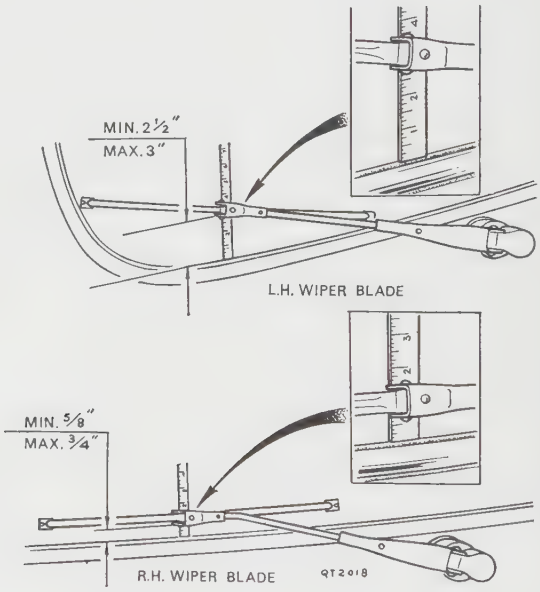

WINDSCREEN WIPER BLADE

– **Remove and refit** 84.15.05

Removing

1. Lift the wiper arm and blade from the screen.
2. Simultaneously lift the clip 'A', tilt cage 'B' and gently pull the wiper blade from the arm.

Refitting

3. Locate the cage and clip assembly to the wiper arm. Push on to engage 'pip'.
4. Lower the wiper arm to the screen.

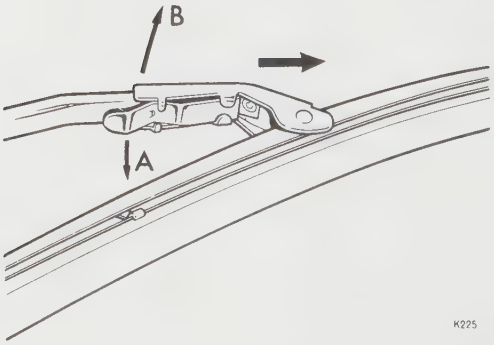

WIPER MOTOR

– Remove and refit 84.15.12

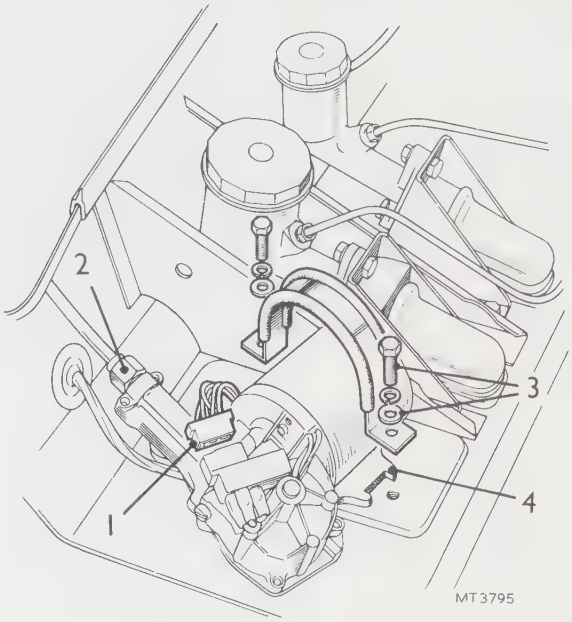

Removing

1. Remove the harness plug.
2. Unscrew the nut securing the tubing to the gear assembly.
3. Remove the strap and sleeve and detach the earth lead – two bolts, spring washers and plain washers.
4. Lift off the rubber mounting pad.
5. Remove the gearbox cover – four screws.
6. Remove the crankpin spring clip by withdrawing sideways. Remove the washer.
7. Carefully withdraw the connecting rod and remove the washer.
8. Detach the rack assembly and remove the motor and gear assembly.

Refitting

9. Lubricate the crankpin with Shell Turbo 41 oil.
10. Lubricate the cross-head end of the connecting rod, including pin with Ragosine Listate grease.
11. Reverse instructions 1 to 8.

WINDSCREEN WIPER SYSTEM

– Motor overhaul 84.15.18

General

If the motor is not operating correctly, first check electrical supply of 12 volts on terminal 5 with normal speed selected and terminal 3 with high speed selected.
If the electrical supply is satisfactory, perform the following operations to determine if the fault is in the motor or in the rack, tube and wheelbox assembly, resulting in the motor being required to drive an excessive load.

Running current

1. Remove the four screws. Lift off the gearbox cover.
2. Remove the crankpin spring clip by withdrawing it sideways. Remove the washer.
3. Carefully withdraw the connecting rod. Remove the washer.
4. Connect an ammeter suitable for running current (see Data) in the supply circuit.
5. Allow the motor to run for 60 seconds. Ammeter reading should then be as given in Data for normal speed and high speed respectively.

If the reading is not as stated, a fault in the motor is indicated.

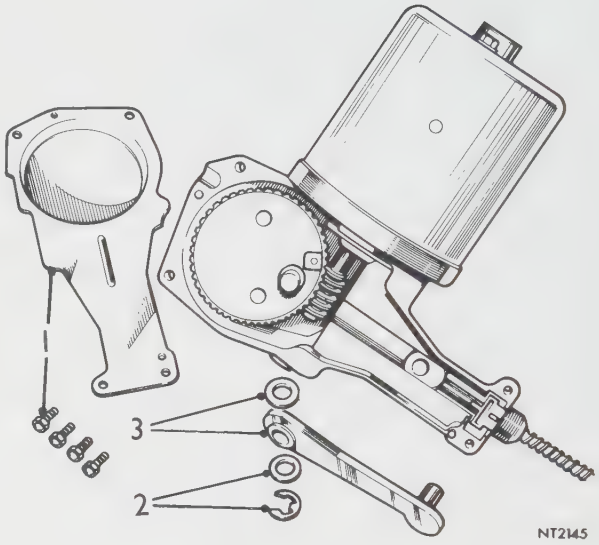

Running speed

1. Remove the four screws. Lift off the gearbox cover.
2. Remove the crankpin spring clip by withdrawing it sideways. Remove the washer.
3. Carefully withdraw the connecting rod. Remove the washer.
4. Allow the motor to run for 60 seconds. Speed of the final gear should then be as given in Data for normal speed and high speed respectively.

If the speed is not as stated, a fault in the motor is indicated.

Force to move rack in tube and wheelbox assembly

1. Remove the four screws. Lift off the gearbox cover.
2. Remove the crankpin spring clip by withdrawing it sideways. Remove the washer.
3. Carefully withdraw the connecting rod. Remove the washer.
4. Remove the wiper arms 84.15.02 and 84.15.03.
5. Attach a suitable spring scale to the hole in the cross-head. Maximum permissible force to move the rack is given in Data.

If the required force is greater than stated, a fault in the rack, tube and wheelbox assembly is indicated.

WINDSCREEN WIPER SYSTEM

– Motor overhaul 84.15.18

Dismantling

1. Remove the four screws. Lift off the gearbox cover.
2. Remove the crankpin spring clip by withdrawing it sideways. Remove the washer.
3. Carefully withdraw the connecting rod. Remove the washer.
4. Remove the final gearshaft spring clip by withdrawing it sideways. Remove the washer.
5. Ensure that the shaft is burr-free and withdraw it. Remove the dished washer.
6. Remove the thrust screw or the thrust screw and lock nut as fitted.
7. Remove the through bolts.
8. Carefully withdraw the cover and armature about 5 mm (0.2 in). Continue withdrawal, allowing the bushes to drop clear of the commutator. Ensure that the three brushes are not contaminated with grease.
9. Pull the armature from the cover against the action of the permanent magnet.
10. Remove the three screws to release the brush assembly. Lift the assembly from the recess.
11. Lift and slide the limit switch out sideways to release the spring clip. Remove the limit switch and brush assembly joined together by wires.

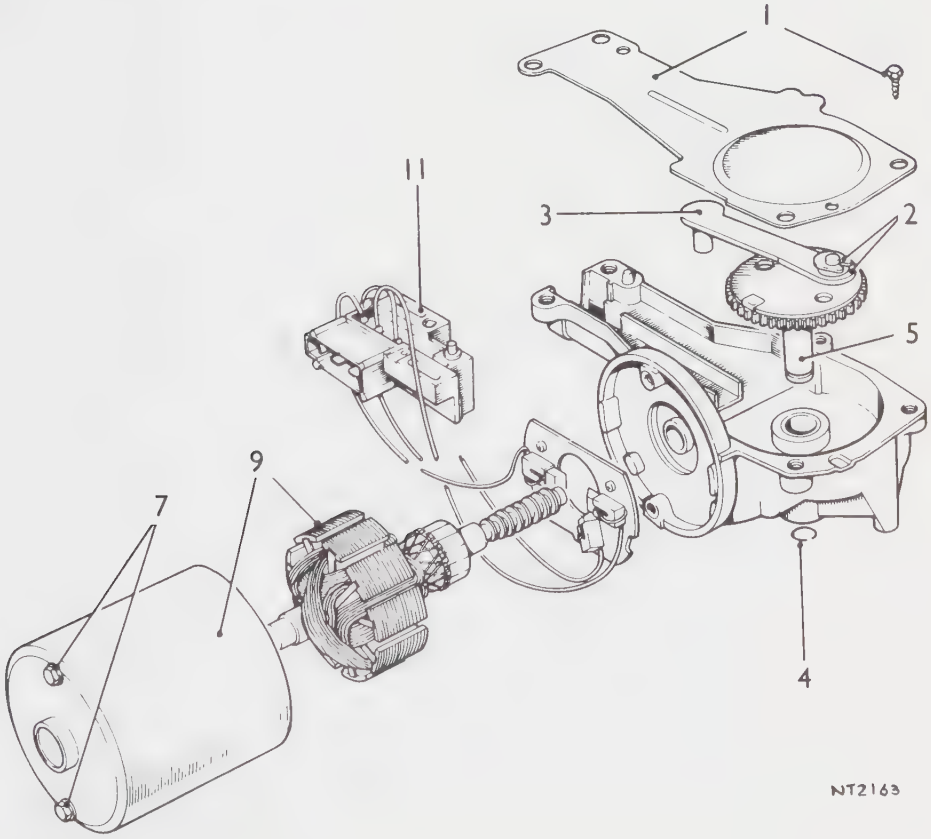

84.15.18 Sheet 2

Reassembling

NOTE: The following lubricants are required during assembly: Shell Turbo 41 oil and Ragosine Listate grease.

12. Slide the limit switch in sideways to secure with the spring clip.
13. Position the brush assembly. Secure with three screws.
14. Lubricate the cover bearing and saturate the cover bearing felt washer with Shell Turbo 41 oil. Position the armature to the cover against the action of the permanent magnet.
15. Lubricate the self aligning bearing with Shell Turbo 41 oil. Carefully insert the armature shaft through the bearing. Ensure that the brushes are not contaminated with lubricant. Push the three brushes back to clear the commutator.
16. Seat the cover against the gearbox. Turn the cover to align the marks shown. Fit the through bolts.
17. Fit the thrust screw or thrust screw and lock nut as fitted.
18. If a non adjustable thrust screw is fitted check armature end float as follows:
    Position a feeler gauge between the armature shaft and the thrust screw. Push the armature towards the cover. End float should be 0.002 – 0.008 in. In the unlikely event of adjustment being required end float may be increased by fitting shim washer/washers under the thrust screw head or reduced by mounting the thrust screw in a lathe and removing metal from the underside of the head.
19. If an adjustable thrustscrew and lock nut is fitted adjust the armature end float as follows: Slacken the lock nut. Screw the thrust screw in until resistance is felt. Screw the thrust screw out a quarter of a turn – maintain it in this position and tighten the lock nut.
20. Lubricate the final gear bushes with Shell Turbo 41 oil. Lubricate the final gear cam with Ragosine Listate grease. Fit the dished washer with the concave surface facing the final gear. Insert the shaft.
21. Fit the washer. Fit the spring clip by inserting it sideways.
22. Pack Ragosine Listate grease around the worm gear, final gear and into the cross-head guide channel.
23. Fit the washer. Lubricate the final gear crankpin with Shell Turbo 41 oil. Lubricate the cross-head end of the connecting rod, including the pin, with Ragosine Listate grease. Carefully insert the connecting rod.
24. Fit the washer. Fit the spring clip by inserting it sideways.
25. Position the gearbox cover. Secure with four screws.

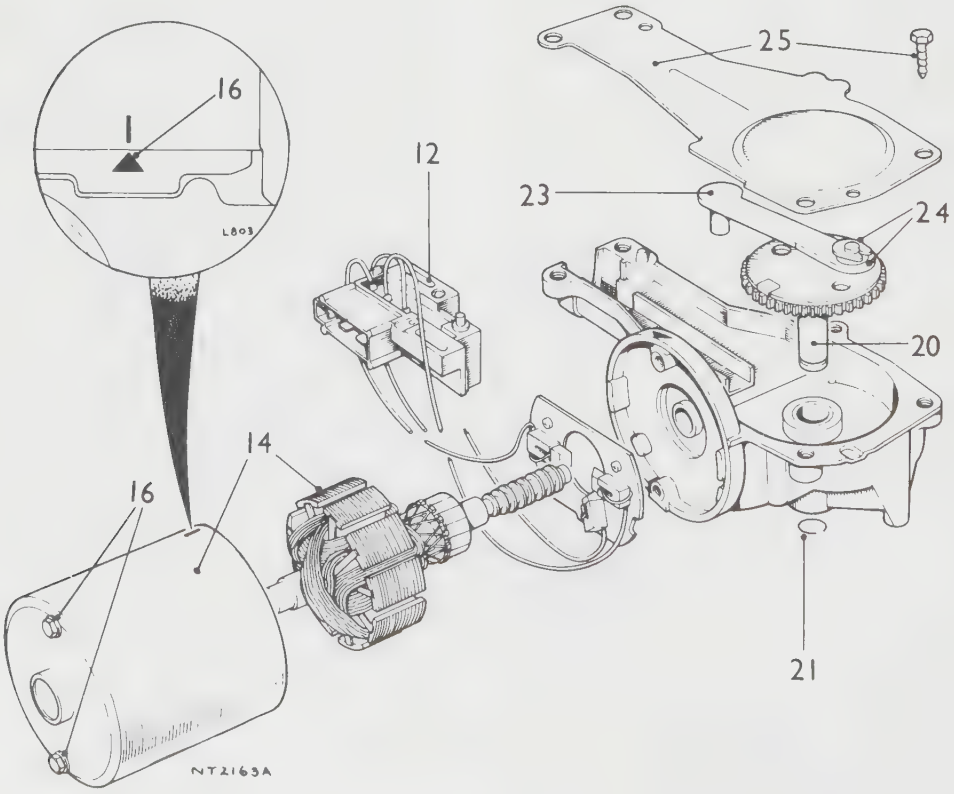

84.15.18 Sheet 3

WINDSCREEN WIPER RACK

– Remove and refit 84.15.24

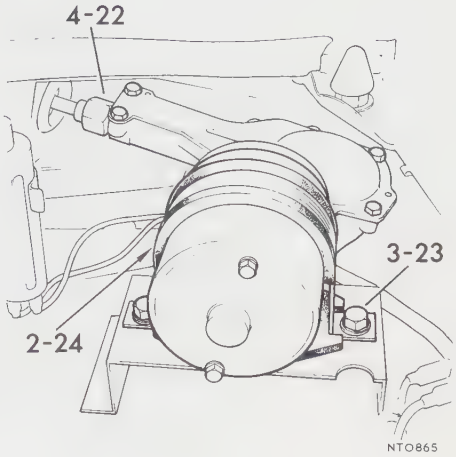

Removing

1. Remove the two wiper arms 84.15.01.
2. Remove the harness plug from the limit switch.
3. Remove the two bolts, spring washers and plain washers. Remove the strap and rubber sleeve. Collect up the rubber pad.
4. Unscrew the tubing nut.
5. Withdraw the motor and rack assembly.
6. Remove four screws. Lift off the gearbox cover.
7. Remove the crankpin spring clip by withdrawing it sideways.
8. Remove the washer.
9. Carefully withdraw the connecting rod.
10. Remove the washer.
11. Remove the crosshead and rack assembly.

Refitting

12. Position the crosshead and rack assembly to the motor.
13. Fit the washer.
14. Lubricate the final gear crankpin with Shell Turbo 41 oil.
15. Lubricate the crosshead end of the connecting rod, including the pin, with Ragosine Listate grease.
16. Carefully insert the connecting rod.
17. Fit the washer.
18. Fit the spring clip by inserting it sideways.
19. Position the gearbox cover. Secure with four screws.
20. Lubricate the rack with Ragosine Listate grease.
21. Insert the motor and rack assembly. It may be necessary to slightly rotate each wheelbox spindle by hand to facilitate the rack engagement.
22. Screw on the tubing nut.
23. Position the rubber pad. Locate the strap and rubber sleeve. Secure with two bolts, spring washers and washers.
24. Fit the harness plug to the limit switch.
25. Fit two wiper arms. 84.15.01.

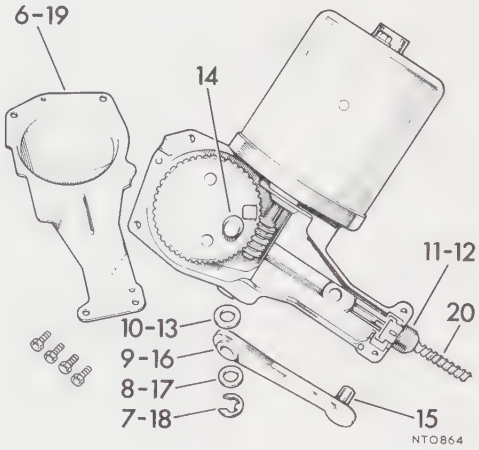

WINDSCREEN WIPER WHEELBOX – LEFT HAND

– Remove and refit **84.15.28**

Removing

1. Remove the rack and motor assembly 84.15.24, instructions 1 to 5.
2. Remove the two nuts securing the wheelbox rear plate.
3. Place the tube ends aside.
4. Remove the spindle nut cover and seal and withdraw the wheelbox and bushes.

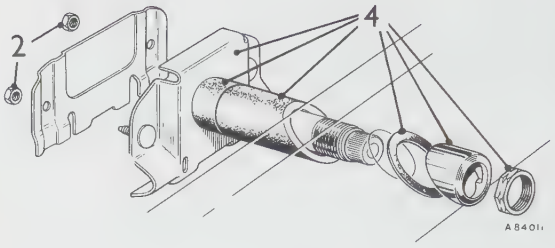

Refitting

Reverse instructions 1 to 4.

WINDSCREEN WIPER WHEELBOX – RIGHT HAND

(L.H. Steer) – 1 to 3, 5 and 6
(R.H. Steer) – 1 and 2, 4 to 6

Remove and refit **84.15.29**

Removing

1. Isolate the battery.
2. Remove the rack and motor assembly 84.15.24, instructions 1 to 5.
3. Remove the passenger's side parcel shelf. 76.67.05.
4. Disconnect the driver's side demister hose at the heater end – 1 clip.
5. Remove the two nuts securing the wheelbox rear plate.
6. Place the tube ends aside.
7. Remove the spindle nut, cover and seal and withdraw the wheelbox and bushes.

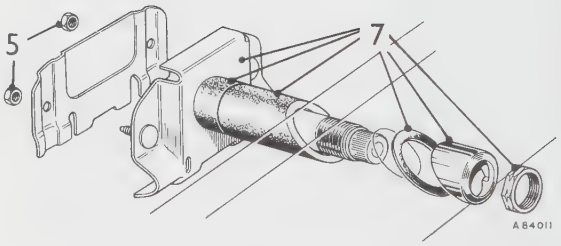

Refitting

Reverse instructions 1 to 7.

ELECTRICAL OPERATIONS

Alternator
- data and description 86.10.00
- drive belt – adjust 86.10.05
- functional check 86.10.01
- overhaul 86.10.08
- remove and refit 86.10.02

Battery – remove and refit 86.15.01

Bulb chart 86.00.01

Cigarette lighter – remove and refit 86.65.60

Emission control system
- anti run-on valve – remove and refit . . . . . refer to 17.40.01
- Catalyst service warning lamp – remove and refit 86.45.60
- E.G.R. service warning lamp – remove and refit 86.45.84
- oil pressure switch – remove and refit 86.65.30

Flasher units
- hazard flasher unit – remove and refit 86.55.12
- turn signal flasher unit – remove and refit 86.55.11

Fuse system
- fuse – remove and refit 86.70.02

Ignition coil and ballast resistor
- data and description 86.35.00
- ignition coil – remove and refit 86.35.32

Ignition distributor – Lucas type 45D4
- contact assembly – remove and refit 86.35.13
- contact gap – adjust 86.35.14
- data and description 86.35.00
- ignition timing – adjust 86.35.15
- lubrication 86.35.18
- overhaul 86.35.26
- remove and refit 86.35.20

Ignition distributor – Lucas type 45DE4 (Electronic)
- data, description, and troubleshooting 86.35.00
- drive resistor – data and description 86.35.00
- drive resistor – remove and refit 86.35.37
- ignition timing – adjust 86.35.15
- lubrication 86.35.18
- overhaul 86.35.26
- pick-up gap – adjust 86.35.31
- remove and refit 86.35.20

Seat belt warning system
- drivers seat belt switch – remove and refit 86.65.31
- fasten belts warning light – remove and refit 86.45.75
- ignition/starter switch – remove and refit 86.65.02
- passengers belt switch – remove and refit 86.65.32
- passengers seat switch – remove and refit 86.65.29
- warning buzzer/timer module – remove and refit 86.57.08

ELECTRICAL OPERATIONS—*continued*

Key warning system
- buzzer – remove and refit 86.58.00
- door switch – remove and refit 86.65.14
- key switch – remove and refit . . . . . refer to 57.40.31

Lamps
- brake failure warning lamp – remove and refit 86.45.77
- front marker lamp – remove and refit 86.40.59
- front parking and flasher lamp – remove and refit 86.40.26
- hazard warning lamp – remove and refit 86.45.76
- headlamp – beam aiming 86.40.17
- key light—remove and refit 86.45.78
- plate illumination lamp – remove and refit 86.40.86
- rear marker lamp – remove and refit 86.40.64
- rear tail/stop/flasher and reverse lamp – remove and refit 86.40.70
- seat belt warning lamp – remove and refit 86.45.75
- wash/wipe lamp – remove and refit 86.45.86

Relays
- horn relay – remove and refit 86.55.09
- overdrive relay – remove and refit 86.55.04
- starter solenoid – remove and refit 86.55.05

Starter motor
- data and description 86.60.00
- inertia drive – remove and refit 86.60.06
- overhaul 86.60.13
- remove and refit 86.60.01

Switches
- brake line failure switch – remove and refit 86.65.47
- column light switch – remove and refit 86.65.17
- data 86.65.00
- door switch – remove and refit 86.65.14
- hazard switch – remove and refit 86.65.50
- horn push – remove and refit 86.65.18
- ignition/starter switch – remove and refit 86.65.02
- interlock – drivers belt switch – remove and refit 86.65.31
- interlock – drivers seat switch – remove and refit 86.65.29
- interlock – interlock gearbox switch – remove and refit 86.65.28
- interlock – passengers belt switch – remove and refit 86.65.32
- interlock – passengers seat switch – remove and refit 86.65.29
- key switch – remove and refit . . . . . refer to 57.40.31
- master light switch – remove and refit 86.65.09
- oil pressure switch – remove and refit 86.65.30
- reverse lamp switch – remove and refit 86.65.20
- stop lamp switch – remove and refit 86.65.51
- turn signal switch – remove and refit 86.65.54
- windscreen wiper switch – remove and refit 86.65.38

Wiring diagram
- —right hand steer 86.00.02
- —left hand steer 86.00.04
- —left hand steer (1975 USA models) 86.00.06
- —left hand steer (1975 USA models) 86.00.08
- —left hand steer (1976 and 1977 USA models) 86.00.10

BULB CHART

	Watts	Lucas Part No.	Unipart No.	Stanpart No.	
Headlamps—L.H. Dip	60/45	54521872	GLU 101	512231	*
R.H. Dip—U.S.A.	50/40	54522231			*
R.H. Dip—France	45/40	411	GLU 411	510219	
R.H. Dip—other markets	60/50	54523079		215735	*
Front parking lamps	5	207	GLB 207	57591	
Front flasher lamps	21	382	GLB 382	502379	
Front marker lamps	4	222		501436	
Rear marker lamps	4	222		501436	
Tail/stop lamps	5/21	380	GLB 380	502287	
Rear flasher lamps	21	382	GLB 382	502379	
Reverse lamp	21	382	GLB 282	502379	
Plate illumination lamp	5	207	GLB 207	57591	
Instrument illumination	2.2	987	GLB 987	59492	
Courtesy light	2.2	987	GLB 987	59492	
Warning lights	2.2	987	GLB 987	59492	
Seat belt warning light	2	281	GLB 281	51300	
E.G.R.	2	281	GLB 281	51300	
Catalytic converter	2	281	GLB 281	51300	
Wipe/wash ident	2	281	GLB 281	51300	
Hazard	2	281	GLB 281	51300	
Brake	2	281	GLB 281	51300	

* Sealed beam unit

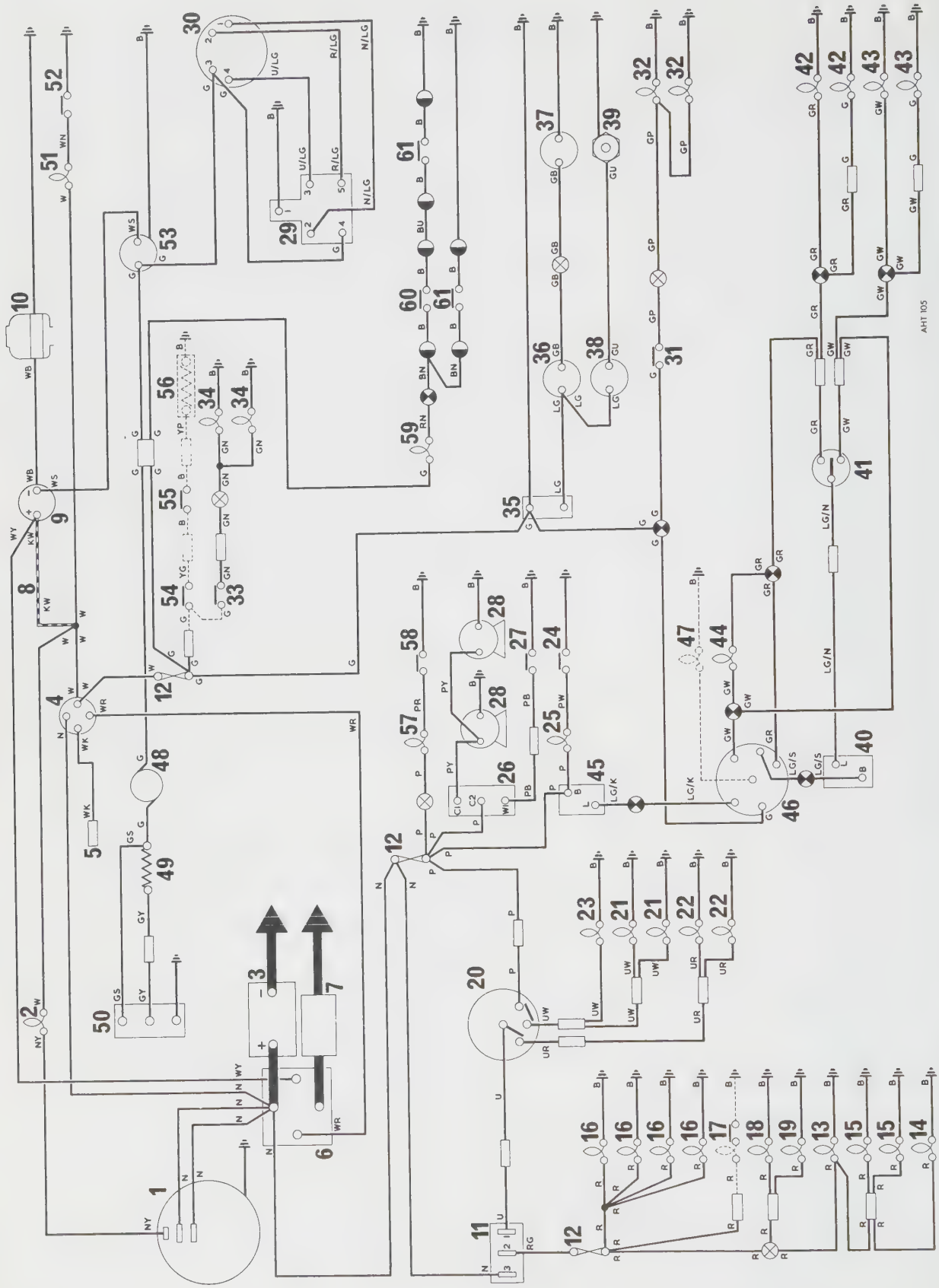

86.00.02

KEY TO WIRING DIAGRAM – RIGHT HAND STEERING

1. Alternator
2. Ignition warning light
3. Battery
4. Ignition/starter switch
5. Windscreen wiper/washer switch
6. Starter solenoid
7. Starter motor
8. Ballast Resistor wire
9. Ignition coil
10. Ignition distributor
11. Master lighting switch
12. Fuse
13. Tail lamp – L.H.
14. Tail lamp – R.H.
15. Plate illumination lamp
16. Panel illumination
17. Map reading light
18. Front parking lamp – L.H.
19. Front parking lamp – R.H.
20. Column light switch
21. Dip beam filament
22. Main beam filament
23. Main beam warning light
24. Door switch
25. Courtesy lamp
26. Horn relay
27. Horn switch
28. Horn
29. Windscreen wiper/washer switch
30. Windscreen wiper motor
31. Stop lamp switch
32. Stop lamp
33. Reverse lamp switch
34. Reverse lamp
35. Voltage stabilizer
36. Fuel indicator
37. Fuel tank unit
38. Temperature indicator
39. Temperature transmitter
40. Direction indicator flasher unit
41. Direction indicator switch
42. Direction indicator repeater lamp – L.H.
43. Direction indicator repeater lamp – R.H.
44. Direction indicator warning light
45. Hazard flasher unit
46. Hazard flasher switch
47. Hazard flasher warning light
48. Heater motor
49. Heater resistor
50. Heater switch
51. Oil pressure warning light
52. Overdrive gearbox switch
53. Tachometer
54. Overdrive gearbox switch
55. Overdrive selector switch
56. Overdrive solenoid
57. Luggage compartment lamp
58. Luggage compartment switch
59. Seat belt warning light
60. Seat belt switch
61. Seat sensor switch

COLOUR CODE

B	Black	N	Brown	S	Slate
G	Green	O	Orange	U	Blue
K	Pink	P	Purple	W	White
LG	Light green	R	Red	Y	Yellow

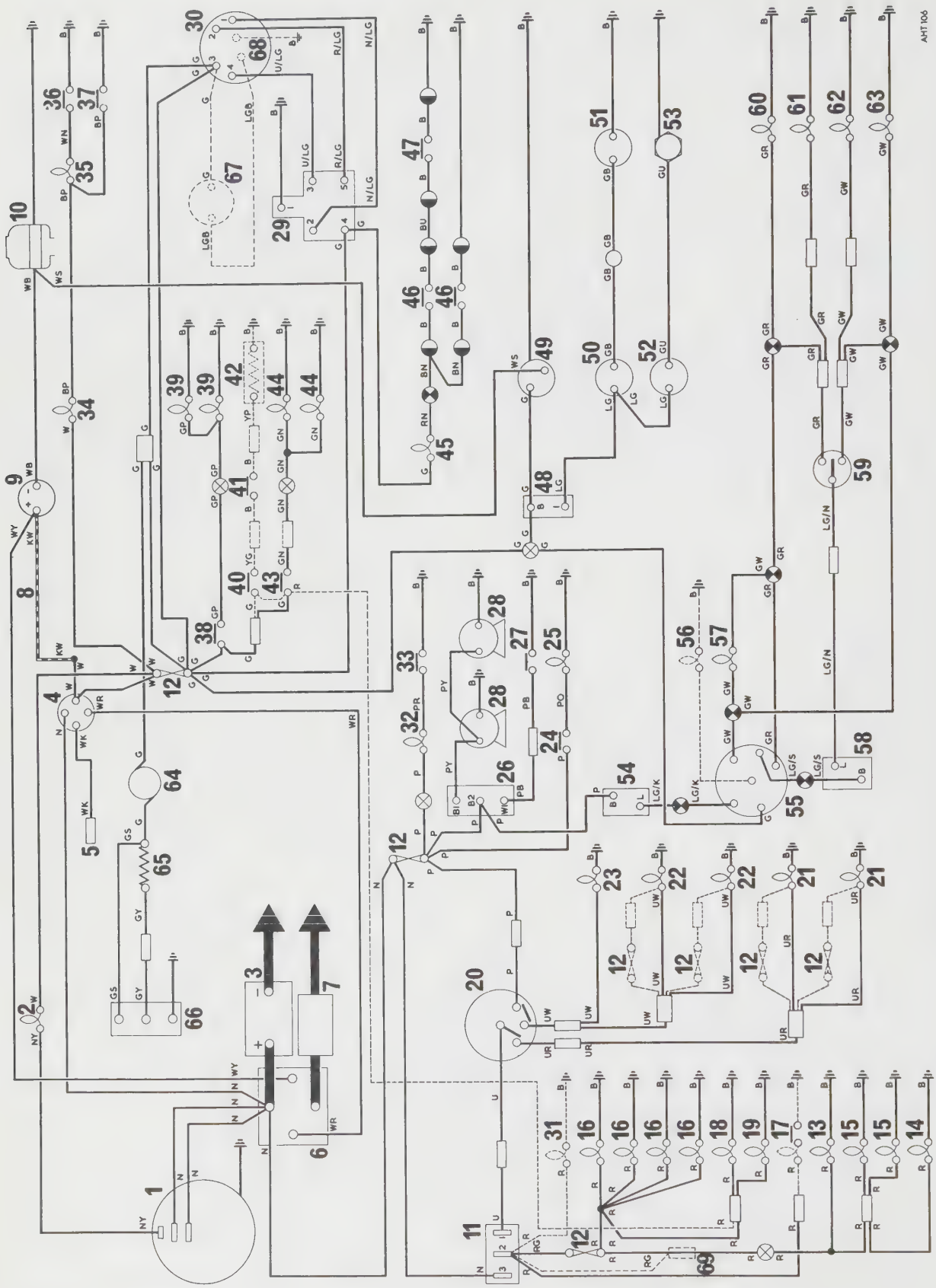

86.00.04

KEY TO WIRING DIAGRAM – LEFT HAND STEERING – NON U.S.A. MARKETS

1. Alternator
2. Ignition warning light
3. Battery
4. Ignition/starter switch
5. Windscreen wiper/washer switch
6. Starter solenoid
7. Starter motor
8. Ballast Resistor wire
9. Ignition coil
10. Ignition distributor
11. Master lighting switch
12. Fuse
13. Tail lamp – L.H.
14. Tail lamp – R.H.
15. Plate illumination lamp
16. Panel illumination
17. Map reading light
18. Front parking lamp – L.H.
19. Front parking lamp – R.H.
20. Column light switch
21. Dip beam filament
22. Main beam filament
23. Main beam warning light
24. Door switch
25. Courtesy lamp
26. Horn relay
27. Horn switch
28. Horn
29. Windscreen wiper/washer switch
30. Windscreen wiper motor
31. Parking lamp warning light (Italy only)
32. Luggage compartment lamp
33. Luggage compartment switch
34. Brake failure warning light
35. Oil pressure warning light
36. Oil pressure switch
37. Brake failure switch
38. Stop lamp switch
39. Stop lamp
40. Overdrive gearbox switch
41. Overdrive selector switch
42. Overdrive solenoid
43. Reverse lamp switch
44. Reverse lamp
45. Seat belt warning light
46. Seat belt switch
47. Seat sensor switch
48. Voltage stabilizer
49. Tachometer
50. Fuel indicator
51. Fuel tank unit
52. Temperature indicator
53. Temperature transmitter
54. Hazard flasher unit
55. Hazard flasher switch
56. Hazard flasher warning light
57. Direction indicator repeater lamp
58. Direction indicator flasher unit
59. Direction indicator switch
60 Rear direction indicator lamp – L.H.
61. Front direction indicator lamp – R.H.
62. Front direction indicator lamp – L.H
63. Rear direction indicator lamp – R.H.
64. Heater motor
65. Heater resistor
66. Heater switch
67*. Windscreen washer pump
68*. Windscreen wiper/washer switch
69*. Fuse by-pass circuit for tail lamps

* Special L.H. Steering markets only

COLOUR CODE

B	Black	N	Brown	S	Slate
G	Green	O	Orange	U	Blue
K	Pink	P	Purple	W	White
LG	Light green	R	Red	Y	Yellow

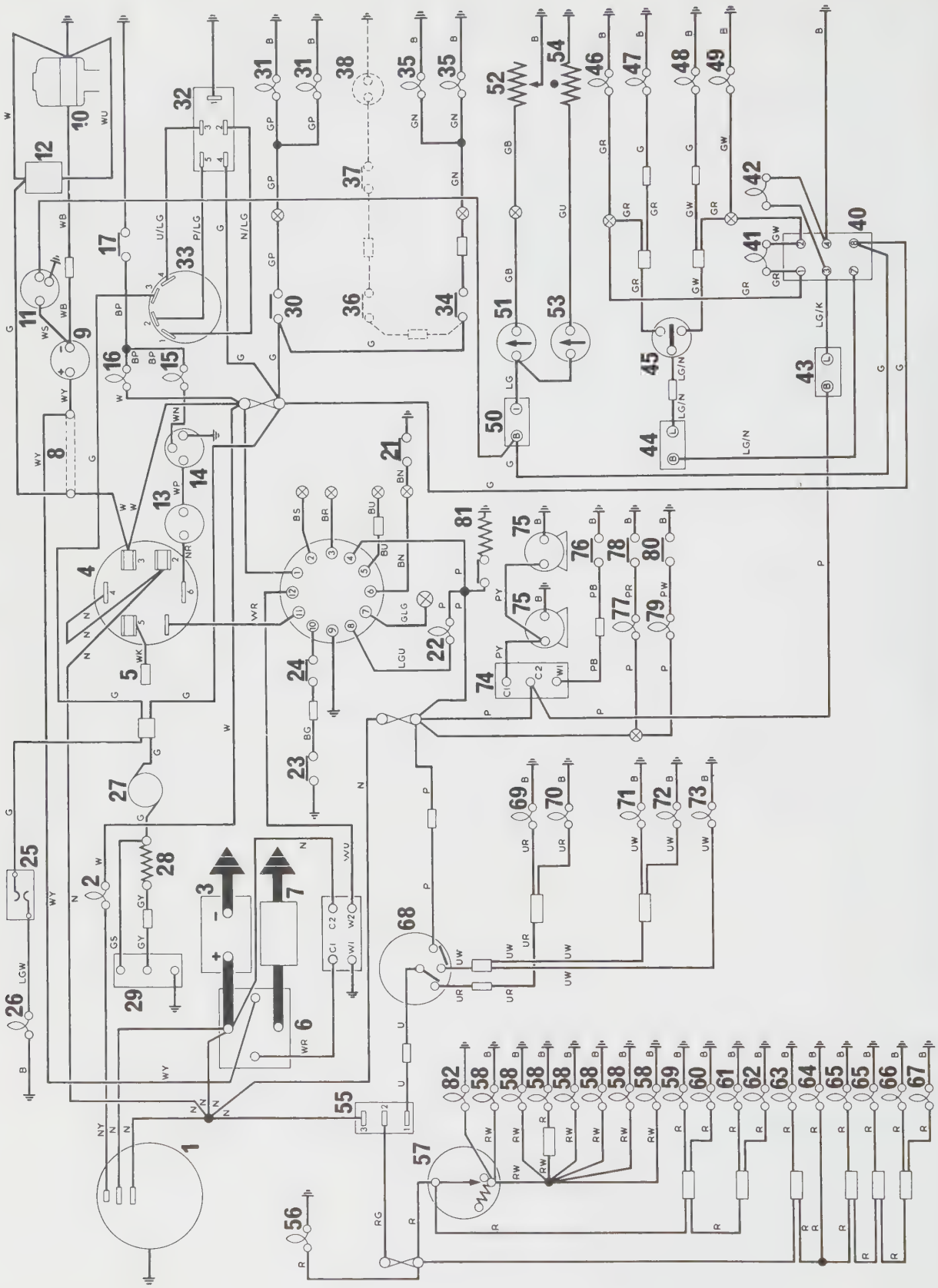

86.00.06

KEY TO WIRING DIAGRAM—LEFT-HAND STEER—1975 USA MARKETS

from Commission No. FM 32410

CAUTION: THIS VEHICLE IS FITTED WITH A NEGATIVE EARTH ELECTRICAL SYSTEM. ENSURE THAT THE BATTERY EARTH LEAD IS ALWAYS CONNECTED TO THE BATTERY NEGATIVE TERMINAL.

THE ALTERNATOR–AND POSSIBLY SOME ACCESSORIES–CONTAIN POLARITY SENSITIVE COMPONENTS THAT MAY BE IRREPARABLY DAMAGED IF SUBJECTED TO INCORRECT POLARITY.

1. Alternator
2. Ignition warning light
3. Battery
4. Ignition starter switch
5. Radio supply
6. Starter solenoid
7. Starter motor
8. Ballast resistor wire
9. Ignition coil – 6 volt
10. Ignition distributor
11. Tachometer
12. Drive resistor
13. Anti run on valve
14. Oil pressure switch
15. Oil pressure warning light
16. Dual brake warning light
17. Dual brake switch
21. L.H. belt switch
22. Seat belt warning light
23. Ignition key contacts
24. L.H. door switch
25. Services interval instrument
26. S.I.I. warning light
27. Two speed heater motor
28. Heater resistor
29. Two speed heater switch
30. Stop lamp switch
31. Stop lamp
32. Two speed wiper switch
33. Two speed wiper motor
34. Reverse lamp switch
35. Reverse lamp
36. Overdrive switch – optional
37. Gearbox switch – optional
38. Overdrive solenoid – optional
40. Hazard switch
41. Direction indicator warning light
42. Hazard warning light
43. Hazard flasher unit
44. Direction indicator flasher unit
45. Direction indicator switch
46. L.H. rear flasher lamp
47. L.H. front flasher lamp
48. R.H. front flasher lamp
49. R.H. rear flasher lamp
50. Voltage stabilisor
51. Fuel gauge
52. Tank unit
53. Temperature gauge
54. Temperature transmitter
55. Master light switch
56. Map light
57. Panel rheostat
58. Panel illumination
59. L.H. front parking lamp
60. R.H. front parking lamp
61. L.H. front side marker
62. R.H. front side marker
63. L.H. rear side marker
64. L.H. tail lamp
65. Plate illumination lamp
66. R.H. tail lamp
67. R.H. rear side marker
68. Headlamp flash/dip switch
69. L.H. dip beam
70. R.H. dip beam
71. L.H. main beam
72. R.H. main beam
73. Main beam warning light
74. Horn relay
75. Horn
76. Horn switch
77. Boot lamp
78. Boot lamp switch
79. Ignition switch illumination
80. L.H. door switch
81. Cigar lighter
82. Cigar lighter illumination

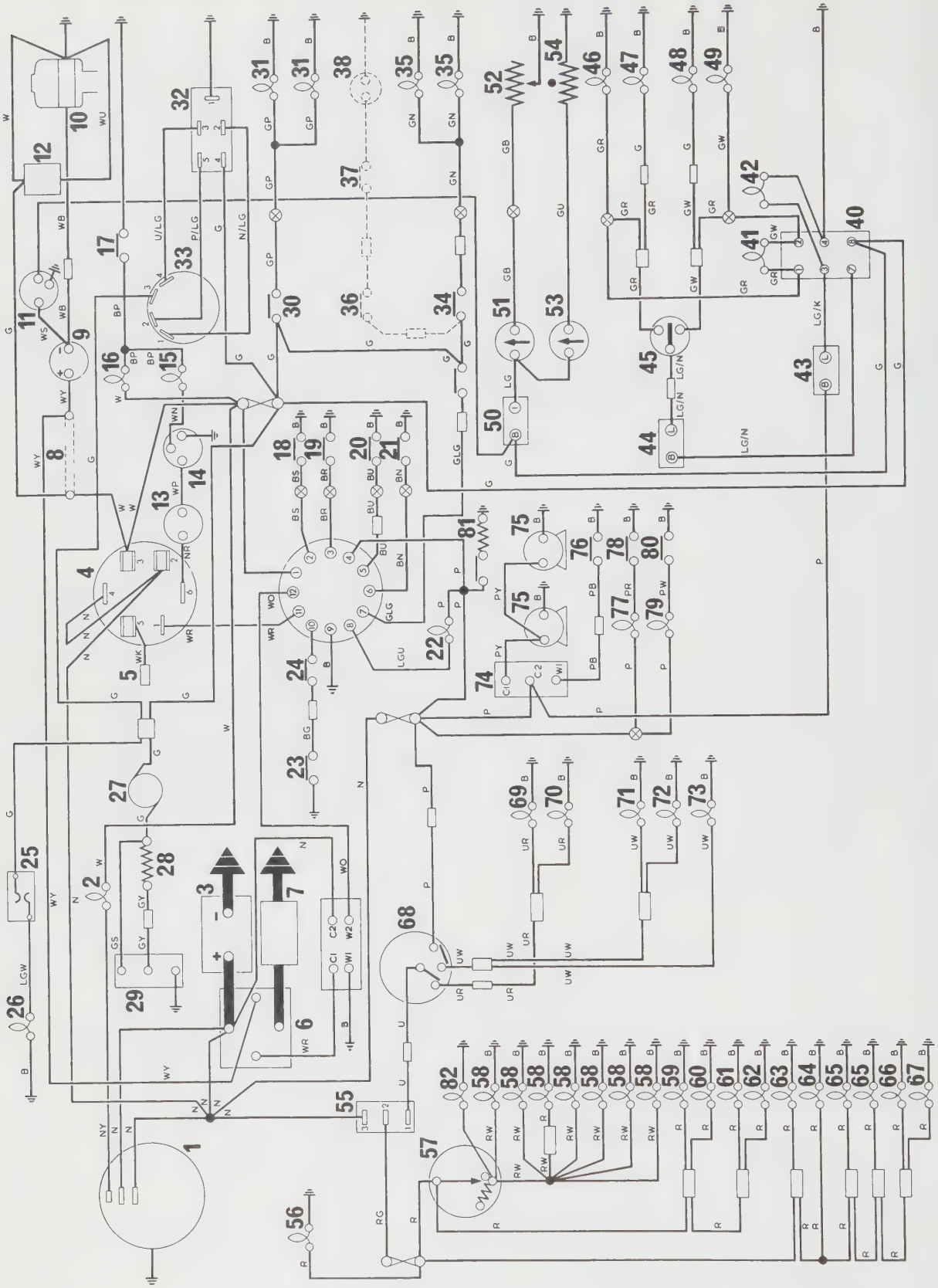

86.00.08

KEY TO WIRING DIAGRAM—LEFT-HAND STEER—1975 USA MARKETS

Up to Commission No. FM 32409

CAUTION: THIS VEHICLE IS FITTED WITH A NEGATIVE EARTH ELECTRICAL SYSTEM. ENSURE THAT THE BATTERY EARTH LEAD IS ALWAYS CONNECTED TO THE BATTERY NEGATIVE TERMINAL.

THE ALTERNATOR–AND POSSIBLY SOME ACCESSORIES–CONTAIN POLARITY SENSITIVE COMPONENTS THAT MAY BE IRREPARABLY DAMAGED IF SUBJECTED TO INCORRECT POLARITY.

1. Alternator
2. Ignition warning light
3. Battery
4. Ignition starter switch
5. Radio supply
6. Starter solenoid
7. Starter motor
8. Ballast resistor wire
9. Ignition coil – 6 volt
10. Ignition distributor
11. Tachometer
12. Drive resistor
13. Anti run on valve
14. Oil pressure switch
15. Oil pressure warning light
16. Dual brake warning light
17. Dual brake switch
18. R.H. seat switch
19 R.H. belt switch
20. L.H. seat switch
21. L.H. belt switch
22. Seat belt warning light
23. Ignition key contacts
24. L.H. door switch
25. Services interval instrument
26. S.I.I. warning light
27. Two speed heater motor
28. Heater resistor
29. Two speed heater switch
30. Stop lamp switch
31. Stop lamp
32. Two speed wiper switch
33. Two speed wiper motor
34. Reverse lamp switch
35. Reverse lamp
36. Overdrive switch – optional
37. Gearbox switch – optional
38. Overdrive solenoid – optional
39. Seat belt neutral switch
40. Hazard switch
41. Direction indicator warning light
42. Hazard warning light
43. Hazard flasher unit
44. Direction indicator flasher unit
45. Direction indicator switch
46. L.H. rear flasher lamp
47. L.H. front flasher lamp
48. R.H. front flasher lamp
49. R.H. rear flasher lamp
50. Voltage stabilisor
51. Fuel gauge
52. Tank unit
53. Temperature gauge
54. Temperature transmitter
55. Master light switch
56. Map light
57. Panel rheostat
58. Panel illumination
59. L.H. front parking lamp
60. R.H. front parking lamp
61. L.H. front side marker
62. R.H. front side marker
63. L.H. rear side marker
64. L.H. tail lamp
65. Plate illumination lamp
66. R.H. tail lamp
67. R.H. rear side marker
68. Headlamp flash/dip switch
69. L.H. dip beam
70. R.H. dip beam
71. L.H. main beam
72. R.H. main beam
73. Main beam warning light
74. Horn relay
75. Horn
76. Horn switch
77. Boot lamp
78. Boot lamp switch
79. Ignition switch illumination
80. L.H. door switch
81. Cigar lighter
82. Cigar lighter illumination

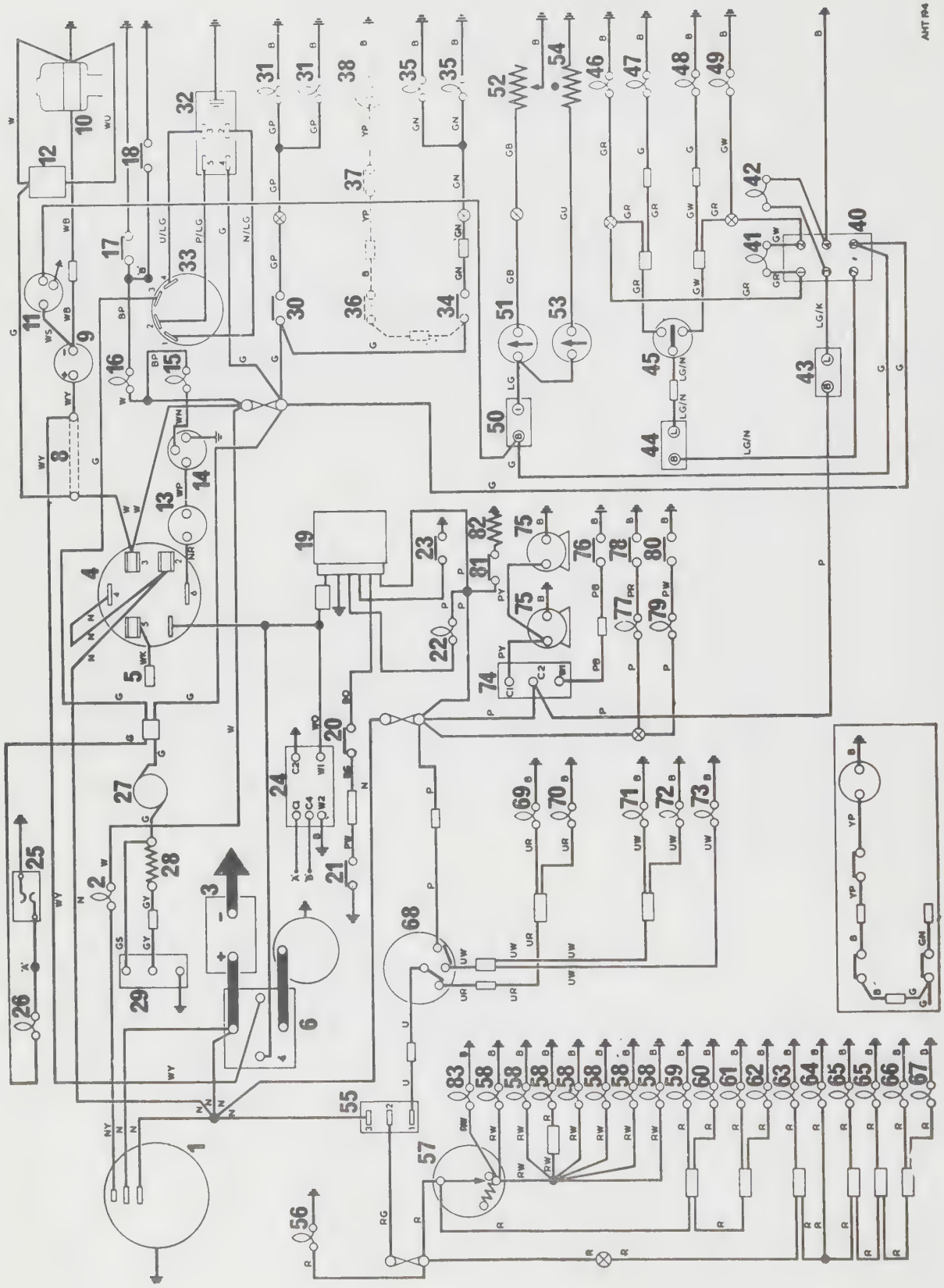

KEY TO WIRING DIAGRAM—1976 AND 1977 USA MARKETS

CAUTION: THIS VEHICLE IS FITTED WITH A NEGATIVE EARTH ELECTRICAL SYSTEM. ENSURE THAT THE BATTERY EARTH LEAD IS ALWAYS CONNECTED TO THE BATTERY NEGATIVE TERMINAL.

THIS ALTERNATOR–AND POSSIBLY SOME ACCESSORIES–CONTAIN POLARITY SENSITIVE COMPONENTS THAT MAY BE IRREPARABLY DAMAGED IF SUBJECTED TO INCORRECT POLARITY.

1. Alternator.
2. Ignition warning light.
3. Battery.
4. Ignition starter switch.
5. Radio supply.
6. Starter solenoid.
7. Starter motor.
8. Ballast resistor wire.
9. Ignition coil – 6 volt.
10. Ignition distributor
11. Tachometer.
12. Drive resistor.
13. Anti run on valve.
14. Oil pressure switch.
15. Oil pressure warning light.
16. Dual brake warning light.
17. Dual brake switch.
18. Hand Brake switch.
19. Seat belt timer.
20. L.H. Door switch.
21. Ignition key contacts.
22. Seat belt warning light.
23. Buckle switch.
24. Starter relay.
25. Services interval instrument.
26. S.I.I. Warning light.
27. Two speed heater motor.
28. Heater resistor.
29. Two speed heater switch.
30. Stop lamp switch.
31. Stop lamp.
32. Two speed wiper switch.
33. Two speed wiper motor.
34. Reverse lamp switch.
35. Reverse lamp.
36. Overdrive switch–optional.
37. Gearbox switch–optional.
38. Overdrive solenoid–optional.
39. Seat belt neutral switch.
40. Hazard switch.
41. Direction indicator warning light.
42. Hazard warning light.
43. Hazard flasher unit.
44. Direction indicator flasher unit.
45. Direction indicator switch.
46. L.H. Rear flasher lamp.
47. L.H. Front flasher lamp.
48. R.H. Front flasher lamp.
49. R.H. Rear flasher lamp.
50. Voltage stabilisor.
51. Fuel gauge.
52. Tank unit.
53. Temperature gauge.
54. Temperature transmitter.
55. Master light switch.
56. Map light.
57. Panel rheostat.
58. Panel illumination.
59. L.H. Front parking lamp.
60. R.H. Front parking lamp.
61. L.H. Front side marker
62. R.H. Front side marker.
63. L.H. Rear side marker.
64. L.H. Tail lamp.
65. Plate illumination lamp.
66. R.H. Tail lamp.
67. R.H. Rear side marker.
68. Headlamp flash/dip switch.
69. L.H. Dip beam.
70. R.H. Dip beam.
71. L.H. Main beam.
72. R.H. Main beam.
73. Main beam warning light.
74. Horn relay.
75. Horn.
76. Horn switch
77. Boot lamp.
78. Boot lamp switch.
79. Ignition switch illumination.
80. L.H. Door switch
81. Cigarette lighter switch
82. Cigarette lighter element
83. Cigarette lighter illumination

ALTERNATOR DATA CHART

Manufacturer	Lucas
Type	16ACR Battery Sensed

Part numbers	Lucas Part No.	Triumph Part No.
assembly		
–comprising–		
Alternator	23795	219267
Fan	54217652	147990
Pulley	54219467	154334

Polarity	Negative earth only
Brush length–new	0.5 in (12.70 mm)
–renew if less than	0.2 in (5.00 mm) protrudes from brush box when free
Brush spring pressure	9–13 oz (255 to 370 g) at face flush with brushbox
Rectifier pack–output rectification	6 diodes (3 liveside, 3 earthside)
–field winding supply rectification	3 diodes
Stator windings	Three-phase, star connected
Field winding rotor–poles	12
–maximum permissible speed	15,000 rev/min
–shaft thread	$\frac{3}{16}$ in–18 U.N.F.
Regulator–type	14 TR dual sensed
Nominal output–condition	Hot
–alternator speed	6,000 rev/min
–engine speed	2609 rev/min
–control voltage	14–14.4 V
–amps	34

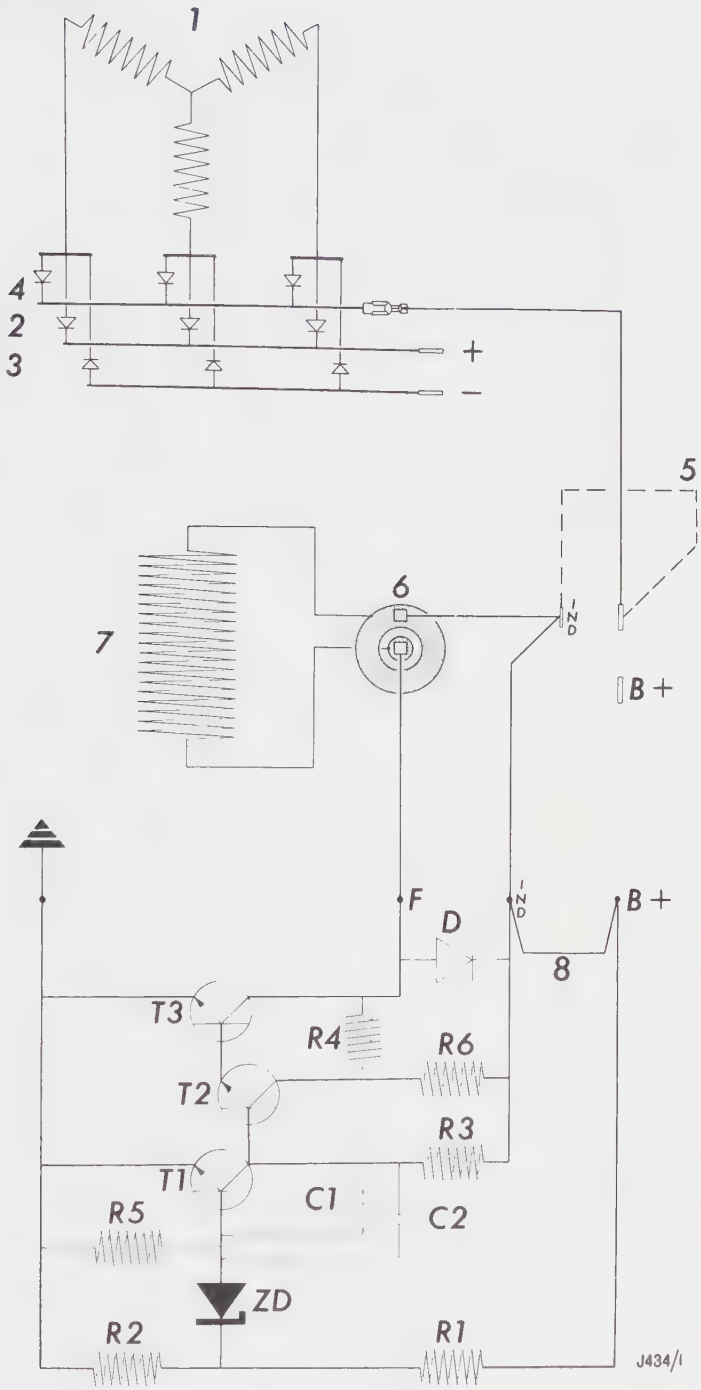
1
4
2
3
+
−
5
6
7
-ND
B +
F
D
-ND
B +
8
T3
R4
R6
T2
R3
T1
C1
C2
R5
ZD
R2
R1
J434/1

KEY TO ALTERNATOR WIRING DIAGRAM

1.	Stator windings	
2.	Live side output diodes	
3.	Earth side output diodes	
4.	Field winding supply diodes	
5.	Harness loop	Circuit is made when multi-socket connector is fitted and broken when connector is removed.
6.	Brushes and slip rings	
7.	Field winding	
8.	Internal B+ connection	
R3.	Resistor	Restricts T2 base current supplied from 'field winding supply' diodes.
T2.	Intermediate transistor	Controls T3 base current direct.
R6.	Resistor	Restricts T3 base current supplied from 'field winding supply' diodes.
T3.	Output transistor	Controls field winding earth return circuit.
R1 and R2.	Potential divider	Senses battery reference voltage.
ZD.	Zener diode	Voltage sensitive component. Opposes passage of current until breakdown voltage – approximately 8 volts – is reached. Controls T1 base current direct.
T1.	Input transistor	Controls T2 base current by diverting current passing through R3 to earth when ZD is conducting.
C1 and R4.	Capacitor and Resistor	Prevents transistor overheating by providing a positive feed back circuit to ensure quick switching of transistors from 'fully on' to 'fully off'.
R5.	Resistor	Path for small leakage current which may pass through ZD at high temperatures.
D.	Surge quench diode	Connected across field winding. Protects T3 from field winding high induced voltage surge and smoothes field winding current.
C2.	Condenser	Radio interference suppression.

ALTERNATOR

– Functional check 86.10.01

This operation must be performed in two parts. The first to prove the alternator's capacity to produce current, while the second is to prove the performance of the integral control unit.

Check capacity to produce current

NOTE: The stated output may be exceeded slightly when the alternator is cold. To avoid misleading results, the check should be performed with the unit as near normal operating temperature as possible.

1. Check drive belt adjustment. 86.10.05.
2. Disconnect the multi-socket connectors.
3. Remove the moulded cover.
4. Provide a test circuit as shown.

CAUTION: The alternator contains polarity-sensitive components that may be irreparably damaged if subjected to incorrect polarity. Observe polarity of alternator and battery terminals.

5. Do not connect the variable resistor across the battery for longer than is necessary to perform the check.
6. Run the engine.
7. Gradually increase the speed. At 1500 alternator rev/min (620 engine rev/min) the light should be extinguished.
8. Hold the speed at approximately 6,000 alternator rev/min (2,480 engine rev/min). Adjust the variable resistor so that the voltmeter reads 14 volts. The ammeter reading should now be approximately 28 amps.
9. If the ammeter reading is not approximately 28 amps, the indication is that the alternator requires overhaul or replacement.

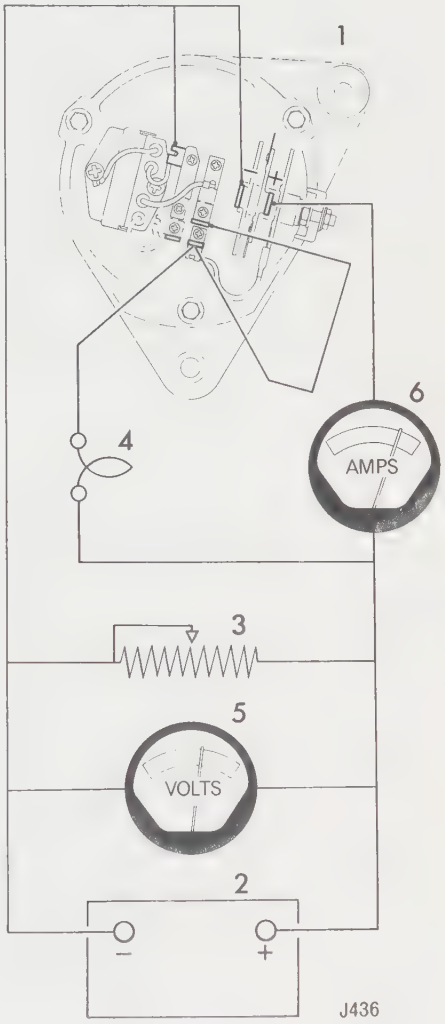

1. Alternator
2. Battery . . . . . .12 volt
3. Variable resistor . . . . . .0–15 ohm – 35 amp
4. Light . . . . . .12 volt – 2.2 watt
5. Voltmeter . . . . . 0–20 volt
6. Ammeter . . . . . 0–40 amp

Sheet 1 86.10.01

Check control unit

NOTE: The stated output may be exceeded slightly when the alternator is cold. To avoid misleading results, the check should be performed with the unit as near to its normal operating temperature as possible.

10. Check drive belt adjustment. 86.10.05.
11. Disconnect multi-socket connectors.
12. Provide test circuit as shown.

CAUTION: The alternator contains polarity-sensitive components that may be irreparably damaged if subjected to incorrect polarity. Observe polarity of alternator and battery terminals.

13. Run the engine.
14. Gradually increase the speed. At 1,500 alternator rev/min (620 engine rev/min) the light should be extinguished.
15. Hold the speed at approximately 6,000 alternator rev/min (2,480 engine rev/min). The voltmeter reading should now be steady at 14.0 to 14.4 volts.
16. If the voltmeter reading is not steady at the above figure – and a satisfactory check of capacity to produce current has been performed – the indication is that the control unit should be replaced.

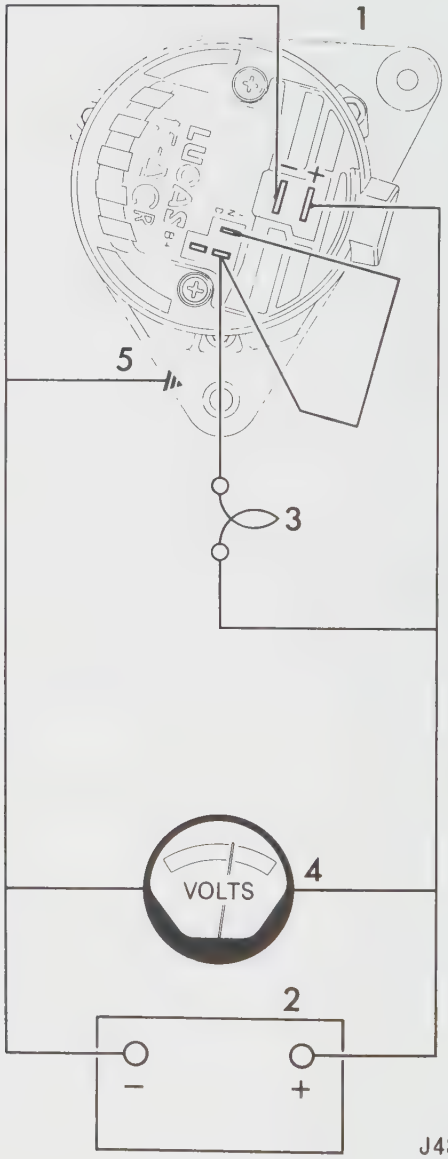

1. Alternator
2. Battery . . . . . .12 volt
3. Light . . . . . .12 volt – 2.2 watt
4. Voltmeter . . . . . 0–20 volt
5. Earth connection to alternator body.

ALTERNATOR

– Remove and refit **86.10.02**

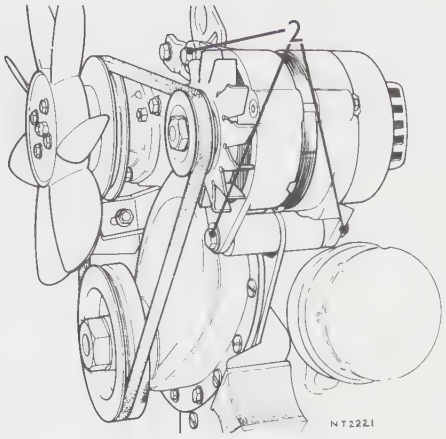

Removing

1. Disconnect the multi-socket connectors.
2. Slacken the main mounting bolt and the two adjustment bracket bolts.
3. Push the alternator towards the engine and remove the drive belt from the pulley.
4. Remove the outer adjustment bracket bolt.
5. Support the weight of the alternator and remove the main mounting bolt and spacer.

Refitting

6. Position the alternator. Fit the main mounting bolt and spacer.
7. Fit the outer adjustment bracket bolt.
8. Push the alternator towards the engine and fit the drive belt to the pulley.
9. Adjust the drive belt. 26.20.01.
10. Connect the multi-socket connectors.

ALTERNATOR

– Drive belt – adjust **86.10.05**

1. Slacken the adjustment bolt.
2. Slacken the support bracket bolt.
3. Slacken the main mounting bolt.
4. Carefully lever the alternator away from the engine to tension the belt. Tighten the adjustment bolt.

CAUTION: To prevent bearing damage when tensioning the belt use a lever of soft material – preferably wood – applied to the alternator drive end bracket. Do not lever on any other part of the alternator.

5. Check the belt tension. Total movement should be 0.75 to 1.00 in (20 to 25 mm) at the mid-point of the longest run.
6. Tighten the support bracket bolt.
7. Tighten the main mounting bolt.

ALTERNATOR

–Overhaul 86.10.08

[CAUTION: Please read the instructions thoroughly before you attempt alternator repairs. If you lack the necessary skills or tools we sugest you leave this work to an Authorized Dealer or other qualified shop. Before taking a removed alternator in for repair, wipe clean its exterior but do not undertake any disassembly.]

Disassemble

1. Remove the moulded cover.
2. Before disturbing any wires note the wire position and colour.
3. Remove the brushbox, regulator and surge protection diode assembly as follows:
   Remove screw to release surge protection diode. Disconnect three Lucar connectors from the rectifier pack. Remove two screws to release the brushbox. Lift away the assembly.
4. If required, the regulator may be detached from the assembly as follows:
   Remove screw to release one wire eyelet. Remove screw to release the regulator. Disengage two lugs and lift away the regulator. Collect up the spacer.
5. Note the position of the three stator wires on the rectifier pack.
6. Unsolder the three stator wire connections. Do not overheat the diodes or bend the diode pins. Solder quickly and provide a heat sink by gripping the diode pin with pliers.
7. Remove screw to release the rectifier pack earth strip. Slacken the nut and withdraw the rectifier pack.
8. Remove the through-bolts.
9. Provide an extractor tool as shown.
10. To remove the slip-ring end bracket, position the extractor tool to engage with the outer journal of the slip-ring end bearing. Employ a second operator to support the slip-ring end bracket by hand. Carefully tap the extractor tool to drive the bearing from the housing.
    NOTE: It may be necessary to carefully file away surplus solder from the two field winding connections on the slip-ring moulding if the exterior tool will not pass over the moulding.
11. The rubber 'O' ring fitted in the slip-ring end bracket bearing housing may remain *in situ* unless replacement is contemplated.
12. Remove the stator windings from the drive end bracket.
13. Prevent the rotor turning by wrapping a scrap fan belt round the pulley and retaining by hand or vice. Remove the nut, spring washer, pulley and fan. If necessary, use a suitable extractor.
14. Remove the key.
15. Using a suitable press, remove the rotor from the drive end bracket.
    CAUTION: Do not attempt to remove the rotor by applying hammer blows to the shaft end. Such action may burr over and damage the thread.
16. Collect up the thick spacer.
17. Remove the thin spacer from the rotor shaft.

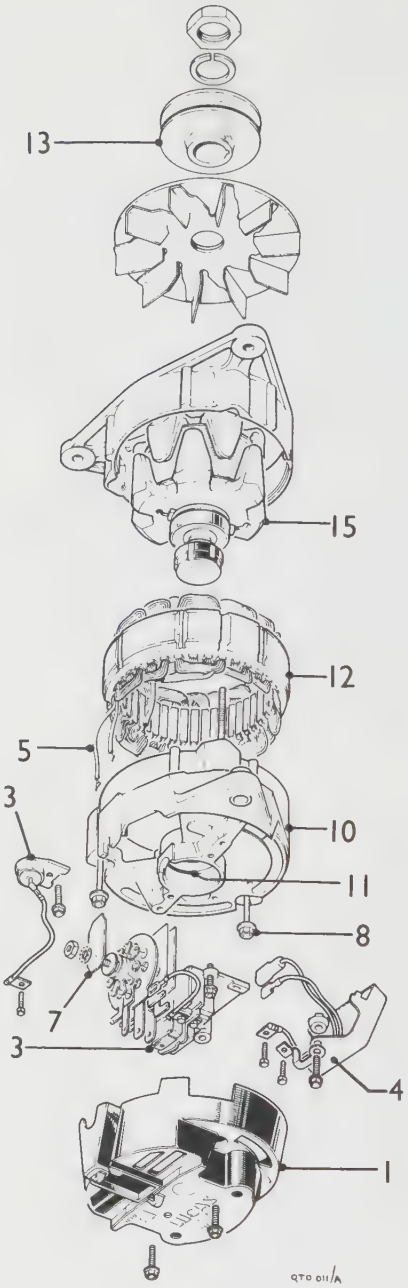

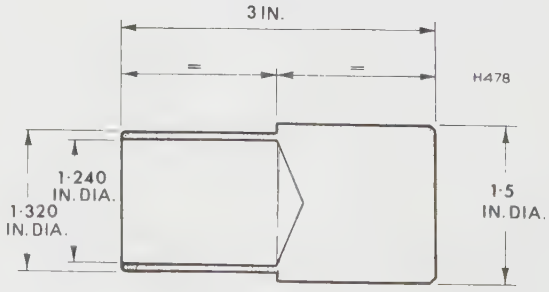

Assemble

18. Fit the thin spacer to the rotor shaft.
19. Using a suitable press, the thick spacer and a suitable tube, fit the rotor to the drive end bracket by applying pressure to the bearing inner journal.

    CAUTION: Do not use the drive-end bracket as a support while fitting the rotor. If the spacer is not employed, the felt ring may be damaged.

20. Fit the key.
21. Fit the pan, pulley, spring washer and nut. Prevent the rotor turning by wrapping a scrap fan belt round the pulley and retaining by hand or vice. Torque load the nut to 25 to 30 lbf ft (3.46 to 4.15 kgf m).
22. Observe the relationship of the stator windings to the drive-end bracket determined by the stator wire connections, the rectifier pack position on the slip-ring end bracket, the alignment of the mounting lugs on the end brackets and the through-bolt clearances on the stator windings.
23. Position the stator windings to the drive-end bracket.
24. Ensure that the rubber 'O' ring is fitted correctly in the slip-ring end bracket bearing housing.
25. Fit the slip-ring end bracket by carefully pushing the bearing into the housing.
26. Fit the through-bolts, tightening evenly.
27. Position the rectifier pack. Fit screw to secure the rectifier pack earth strip. Tighten the nut to secure the rectifier pack.
28. Position three stator wires on the rectifier pack as noted operation 5.
29. Solder three stator wire connections. Note the precautions stated in operation 6 and use 'M' grade 45 – 55 resin core solder.
30. If required, attach the regulator to the brushbox, regulator and surge protection diode assembly as follows:
    Position the spacer. Position the regulator. Fit screw to secure the regulator. Fit screw to secure one wire eyelet.
31. Fit the brushbox, regulator and surge protection diode assembly as follows:
    Position the assembly. Fit two screws to secure the brushbox, include one earth wire eyelet under one screw head. Connect three Lucar connectors to the rectifier pack. Fit screw to secure surge protection diode.
32. Fit the moulded cover.

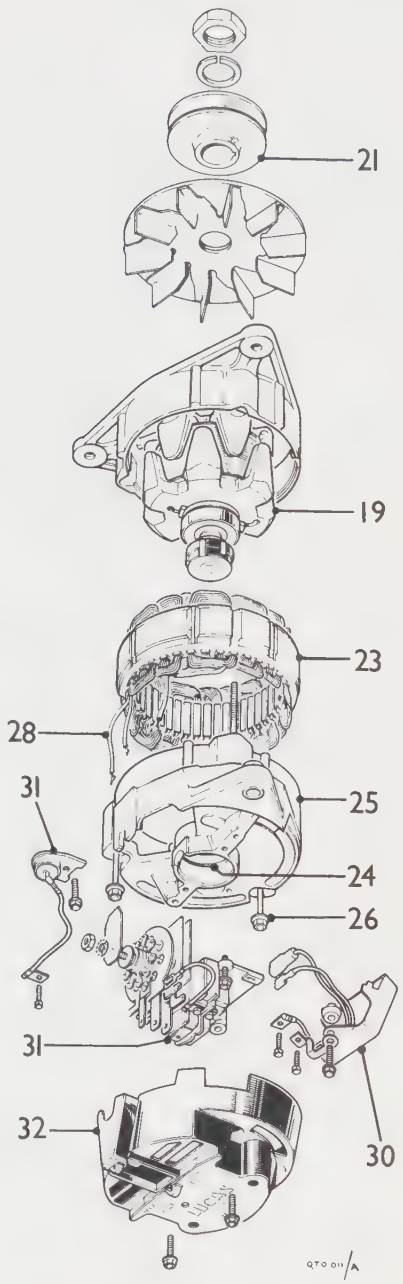

BATTERY

– Remove and refit 86.15.01

[CAUTION: Keep sparks and open flame away from the top of the battery. Hydrogen gas from the battery could explode violently. When you work with battery electrolyte, wear goggles and do not allow the liquid to contact your skin or clothing. Electrolyte is corrosive and can cause severe burns. If it should spill onto your skin, flush the area of contact immediately with large quantities of water. Spilled electrolyte can be neutralized with a strong baking soda solution.]

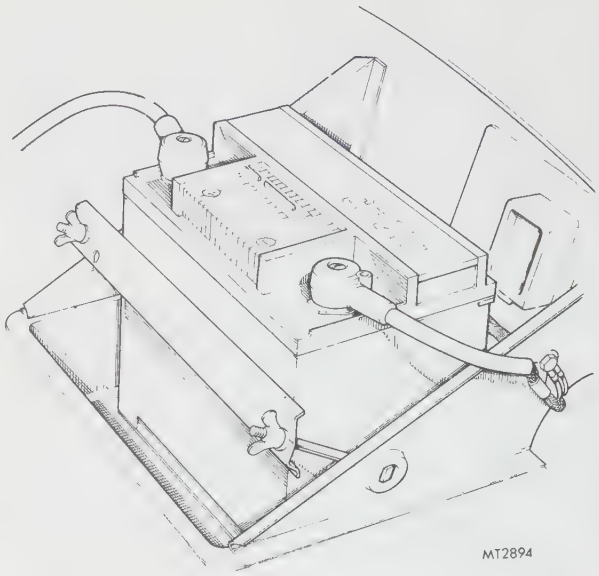

Removing

1. Remove the battery leads.
2. Slacken the nuts and swing down the battery retaining assembly.
3. Lift the battery from the vehicle.

Refitting

4. Lift the battery into the tray.
5. Swing up the battery retaining assembly. Tighten the nuts.
6. Fit the battery leads. Do not hammer the terminals on to the terminal posts.
7. Coat the terminals with petroleum jelly (Vaseline) to prevent corrosion.

IGNITION DISTRIBUTOR

DATA

Manaufacturer	Lucas
Type	45D4
Lucas Part No.	41449
Triumph Part No.	RKC 0638
Contact gap	0.015±0.001 (0.35–0.40 mm)
Rotation – viewed on rotor	Anti clockwise
Firing angles	90±1 degree
Dwell angle	51±5 degrees
Open angle	39±5 degrees
Moving contact spring tension	18 to 24 oz f (510 to 680 g)
Capacitor/condenser capacity	0.18–0.25 microfarad
Engine firing order	1–3–4–2

Centrifugal Advance

Check at increasing speeds

Distributor r.p.m.	Degrees distributor advance		Crankshaft r.p.m.	Degrees crankshaft advance	
	Minimum	Maximum		Minimum	Maximum
300	No advance to occur		600	No advance to occur	
550	1	3	1100	2	6
700	3	5	1400	6	10
1000	4	6	2000	8	12
1600	6	8	3200	12	16

Vacuum Advance

Inches of mercury vacuum	Degrees distributor advance		Degrees crankshaft advance	
	Minimum	Maximum	Minimum	Maximum
2.0	No advance to occur		No advance to occur	
3.0	0.0	0.5	0.0	1.0
6.5	0.5	3.0	1.0	6.0
8.5	2.5	4.5	5.0	9.0
11.0	4.5	6.5	9.0	13.0
18.0	5.0	7.0	10.0	14.0

IGNITION COIL AND BALLAST RESISTOR

Data and description

Ignition coil	
Manufacturer	Lucas
Type	15C6
Lucas Part No.	45266A
Primary winding resistance	1.30 to 1.45 ohm
Ballast resistor wire	
Resistance	1.3 to 1.5 ohms
Wire length	63 in (160 cm)

This system is designed to assist engine starting under adverse conditions. A ballast resistor wire built into the harness is electrically positioned in series in the normal supply to the ignition coil. This wire causes a voltage drop in the circuit so that the 12 volt supply from the ignition switch may be employed to power the nominally rated 6 volt ignition coil.

During engine start the resistor is by-passed and the battery voltage (reduced from 12 volts by the starter motor load) is applied to the coil direct from the starter solenoid. This slight voltage overload provides an increased high voltage at the spark plugs.

IGNITION DISTRIBUTOR – TYPE LUCAS 45D4

– Contact assembly – remove and refit 86.35.13

Removing

1. Remove the distributor cover and rotor.
2. Remove the lock screw, spring washer and washer.
3. Lift out the 'Quikafit' contact assembly.
4. Disengage the contact spring from the insulation pad.
5. Unclip the terminal plate from the contact spring.

Refitting

6. Wipe preservative from the new contact faces.
7. Clip the terminal plate to the contact spring.
8. Engage the contact spring to the insulation pad.
9. Position the 'Quikafit' contact assembly.
10. Fit the lock screw, spring washer and washer.
11. Adjust the contact gap. 86.35.14.

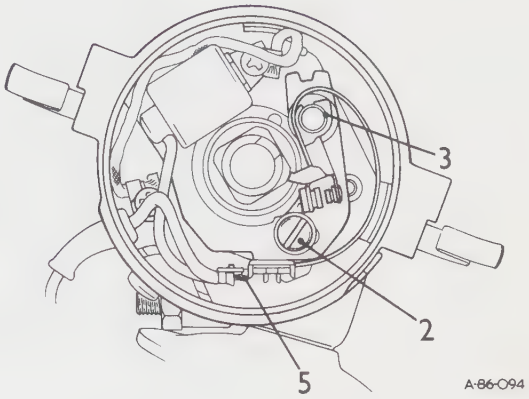

IGNITION DISTRIBUTOR – TYPE LUCAS 45D4

– Contact gap – adjust 86.35.14

1. Remove the cover and rotor.
2. Rotate the crankshaft to position the contact heel on a cam peak.
3. If the contact gap is correct a 0.014 to 0.016 in (0.36 to 0.41 mm) feeler gauge will just slide between the contacts.
4. When the contact gap is correct operations 6 to 9 may be ignored.
5. If a correction is required slacken the lock screw.
6. Move the fixed contact about the pivot to adjust the gap. This may be facilitated by inserting a screwdriver between the slot and the peg as shown and twisting to position the fixed contact.
7. Tighten the lock screw.
8. Check that the correct gap has been maintained.

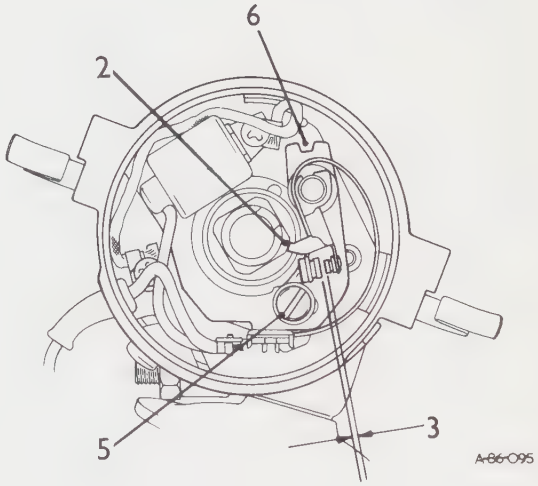

IGNITION DISTRIBUTOR – TYPE LUCAS 45D4

– Ignition timing – adjust **86.35.15**

Static

1. Adjust the contact gap. 86.35.14.
2. Disconnect the distributor low tension lead from the coil.
3. Provide a test lamp circuit as shown.
4. Rotate the crankshaft in the engine run direction to align the pulley notch with the 24 degree BEFORE on the scale. The test lamp should now be illuminated.
5. Carefully rotate the crankshaft further until the lamp just goes out.
6. If the timing is correct the pulley notch will be aligned with the scale at the static figure given in the chart. 86.35.00.
7. If correct operation 8 and 9 may be ignored.
8. Slacken the clamp bolt. Align the pulley notch with the scale at the static figure given in the chart. 86.35.00. Rotate the distributor body anti-clockwise past the test lamp illumination position. Carefully rotate clockwise until the lamp just goes out. Tighten the clamp bolt with the unit in this position.
9. Repeat operation 4 onwards.

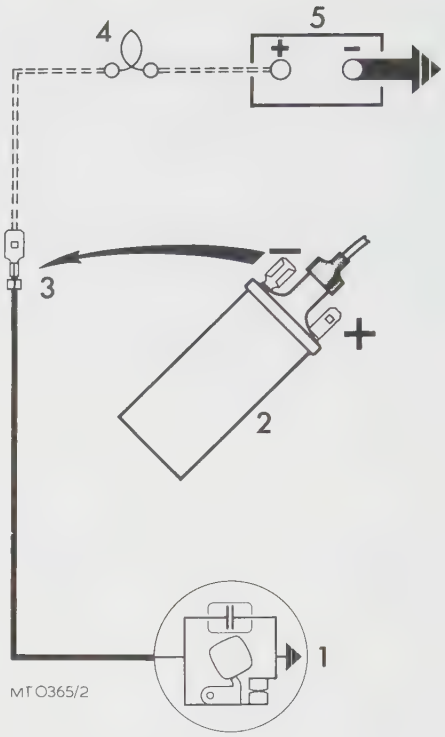

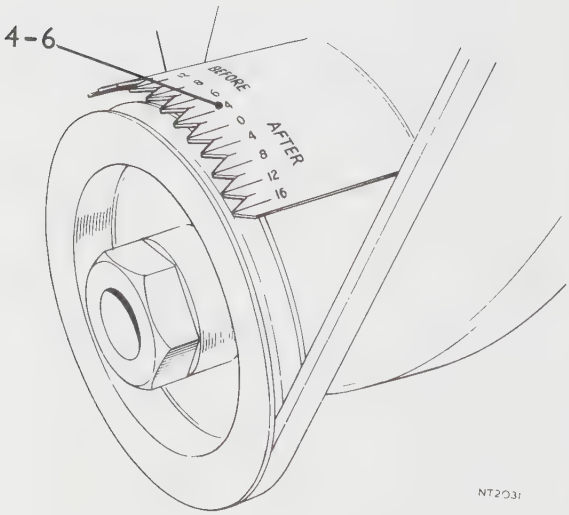

IGNITION DISTRIBUTOR – TYPE LUCAS 45D4

– Lubrication 86.35.18

1. Remove the cover and rotor.
2. Apply a few drops of engine oil to the felt pad to lubricate the cam spindle bearing.
3. Inject a few drops of engine oil through the apertures to lubricate the centrifugal timing control.
4. Apply one drop of engine oil to each of the two lubrication apertures of the contact plate bearing.
5. Lightly grease the cam with Shell Retinax A or equivalent.
6. If the moving contact is removed from the post lightly grease the post with Shell Retinax A or equivalent.

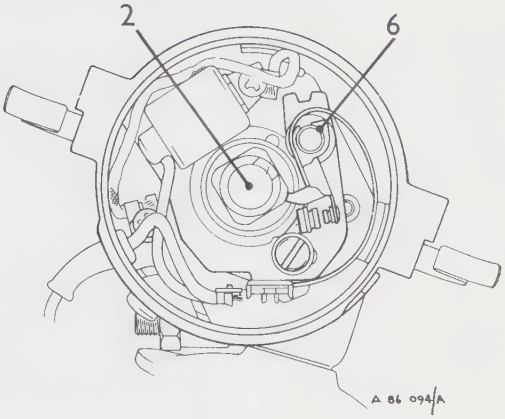

IGNITION DISTRIBUTOR – TYPE LUCAS 45D4

– Remove and refit 86.35.20

Removing

1. Remove the distributor cover.
2. Remove the distributor low tension lead from the coil.
3. Remove the vacuum control pipe.
4. Remove one bolt and spring washer securing the clamp bracket to the pedestal.
5. Withdraw the distributor.

NOTE: To facilitate re-timing do not slacken the clamp bolt.

Refitting

6. Rotate the crankshaft until No. 1 piston is at T.D.C. and the offset distributor drive gear slot is in the position shown.
7. Reverse instructions 1 to 5.
8. Adjust ignition timing if necessary. 86.35.16.

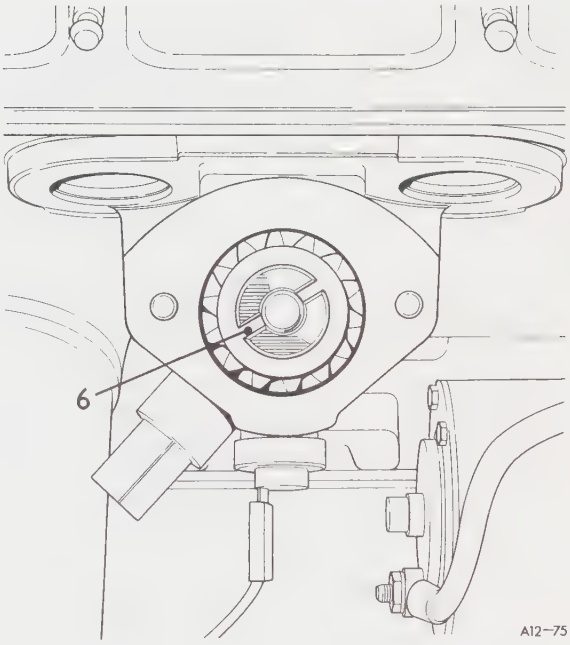

IGNITION DISTRIBUTOR – TYPE LUCAS 45D4

– Overhaul 86.35.26

Dismantling

1. Remove the distributor from the car. 86.35.20.
2. Remove the contact assembly. 86.35.13.
3. Withdraw the felt pad.
4. Remove the capacitor screw. Manoeuvre the low tension lead grommet inwards towards the centre of the unit. Remove the capacitor and low tension lead connected together.
5. Remove two screws and anti-vibration washers. Withdraw the vacuum advance unit.
6. Remove the screw to release the expandable limb. Lift out the moving plate earth lead.
7. Using a small screwdriver push the expanded limb of the base plate inwards to release it from the body chamfered undercut. Lift out the plate assembly.
8. Tap out the drive gear pin. Remove the drive gear and thrust washer. Ensure that the shaft is burr-free and withdraw it.
9. Remove the distance collar.
10. Remove the control springs, exercising care not to distort the springs.

Assemble

11. Lubricate the action plate, weight and cam assembly working surfaces with Rocol 'Moly pad'.
12. Fit the control springs, exercising care not to distort the springs.
13. Fit the distance collar.
14. Lubricate the shaft with Rocol 'Moly pad' and insert it into the body. Fit the thrust washer and drive gear. Secure with the drive gear pin.
15. Temporarily fit one screw and anti vibration washer adjacent to one clip as shown. This is to facilitate operation 16 below.
16. Lubricate the moving plate pin with Rocol 'Moly pad'. Position the plate assembly so that the two downward facing prongs straddle the screw fitted at operation 15 above. Push the plate assembly downwards until it 'clicks' into the body chamfered undercut.
17. Position the moving plate earth lead tag. Fit the screw to expand the expandable limb.
18. Temporarily remove the screw and anti vibration washer fitted at operation 15 above.
19. Lubricate the vacuum advance unit link hole with Rocol 'Moly pad'. Insert the vacuum advance unit so that the moving plate pin engages correctly in the link hole. Secure first with one screw and anti-vibration washer in the round hole. Secure secondly with one screw and anti-vibration washer in the elongated hole.

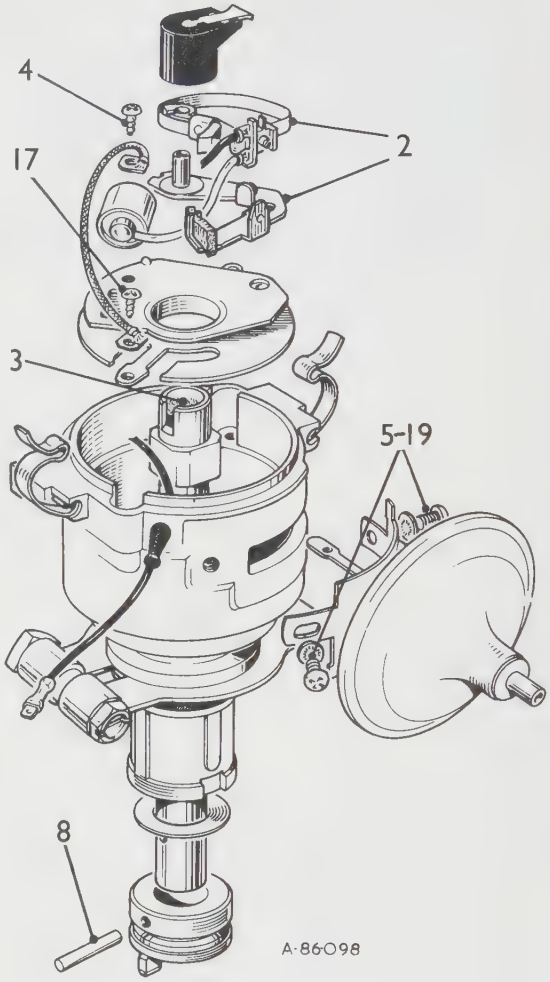

IGNITION DISTRIBUTOR

86.35.00E

DATA

Manufacturer	Lucas
Type	45DE4
Lucas Part No.	41593
Triumph Part No.	TKC 1224
System	Opus electronic in built
Polarity	Negative earth only
Pick up air gap	0.014 to 0.016 in (0.35 to 0.40 mm)
Rotation – viewed on rotor	Anti clockwise
Firing angle	90±1 degree
Engine firing order	1–3–4–2
To be used in conjunction with an external drive resistor of	9.5±5% ohm

Centrifugal Advance

Check at increasing speeds

Distributor r.p.m.	Degrees distributor advance		Crankshaft r.p.m.	Degrees crankshaft advance	
	Minimum	Maximum		Minimum	Maximum
425	No advance to occur		850	No advance to occur	
600	0.0	3.5	1200	0.0	7.0
800	4.0	6.0	1600	8.0	12.0
1300	5.5	7.5	2600	11.0	15.0
1600	6.0	8.0	3200	12.0	16.0
2500	6.0	8.0	5000	12.0	16.0

Retard Unit

Check at 15 in Hg Increase to 20 in Hg Decrease to 1 in Hg

Inches of mercury vacuum	Degrees distributor retard		Degrees crankshaft retard	
	Minimum	Maximum	Minimum	Maximum
1.0	No advance to occur		No advance to occur	
15.0	5.0	7.0	10.0	14.0
20.0	5.0	7.0	10.0	14.0

'OPUS ELECTRONIC IN BUILT' SYSTEM

– Description 86.35.00E

The 'Opus electronic in built' system consists of a conventional ignition coil and high tension circuit. The distributor contains a power transistor which controls the flow of current through the ignition coil primary winding.

Distributor – the conventional cam contacts and capacitor are replaced by an oscillator, timing rotor, pick up and amplifier. A conventional Lucas body, mechanical centrifugal advance and vacuum retard unit are retained.

Electronic circuit – the encapsulated oscillator supplies pulses to the pick up. The majority of these pulses are 'lost'.

The timing rotor is carried on the rotating shaft and contains four ferrite rods. When one of the ferrite rods aligns with the pick up, a pulse is 'caught' by the pick up and applied to the input of the encapsulated amplifier. The result is that the amplifier output switches the power transistor to the 'off' condition.

Ignition coil and high tension circuit – the off' condition of the power transistor collapses the ignition coil primary winding current. A spark occurs at the appropriate spark plug in the conventional manner.

Retard unit – the pick up is mounted on the moving plate. This assembly may be rotated through a limited angle by the vacuum retard unit. The ignition timing is thus modified by the vacuum retard unit by amending the relationship between the timing rotor and the pick up.

Drive resistor – this unit may be considered as a detached component of the amplifier. Its function is associated with the transistors in the amplifier. It is independently mounted due to its size and heat dissipating requirements.

[—Troubleshooting

CAUTION: Never, during troubleshooting or repair, should you connect the white leads of the amplifier module or the pickup module with a blue or black wire or to a source of positive (+) current supply. (This can easily occur accidentally at the pickup module if caution is not exercised.) Always ensure that the ignition is turned off when you are setting the air gap between the pickup module core and the timing wheel. These precautions are necessary in order to avoid damage to the solid-state components of the ignition system.

Testing to locate cause of misfire

1. Check all electrical connections, both primary (low tension) and secondary (high tension) to ascertain that they are clean and tight-fitting.
2. Test the spark plugs and check their gaps, which should be set at 0.025 in. (0.63 mm).
3. Test the plug cables and the high tension cable for excessive resistance and faulty insulation. Examine the distributor rotor, the distributor cap, and the coil tower for carbon tracking. Replace damaged components.
4. Clean and examine the distributor cap brush and spring and the electrodes.
5. Check the pickup module/timing wheel air gap as described in 86.35.31, making sure that the ignition is turned off.
6. If the misfire persists after carrying out the preceding checks and tests, substitute a new ignition coil. If the misfire is still present, substitute a new amplifier module.]

DRIVE RESISTOR

86.35.00E

DATA

Manufacturer	Lucas
Lucas Part No.	54427556
Triumph Part No.	UKC 3908
Resistance	9.5±5% ohm

– Description

This unit may be considered as a detached component of the ignition distributor amplifier. Its function is associated with the transistors in the amplifier. It is independently mounted due to its size and heat dissipating requirements.

TEST CHART FOR COMPLETE FAILURE

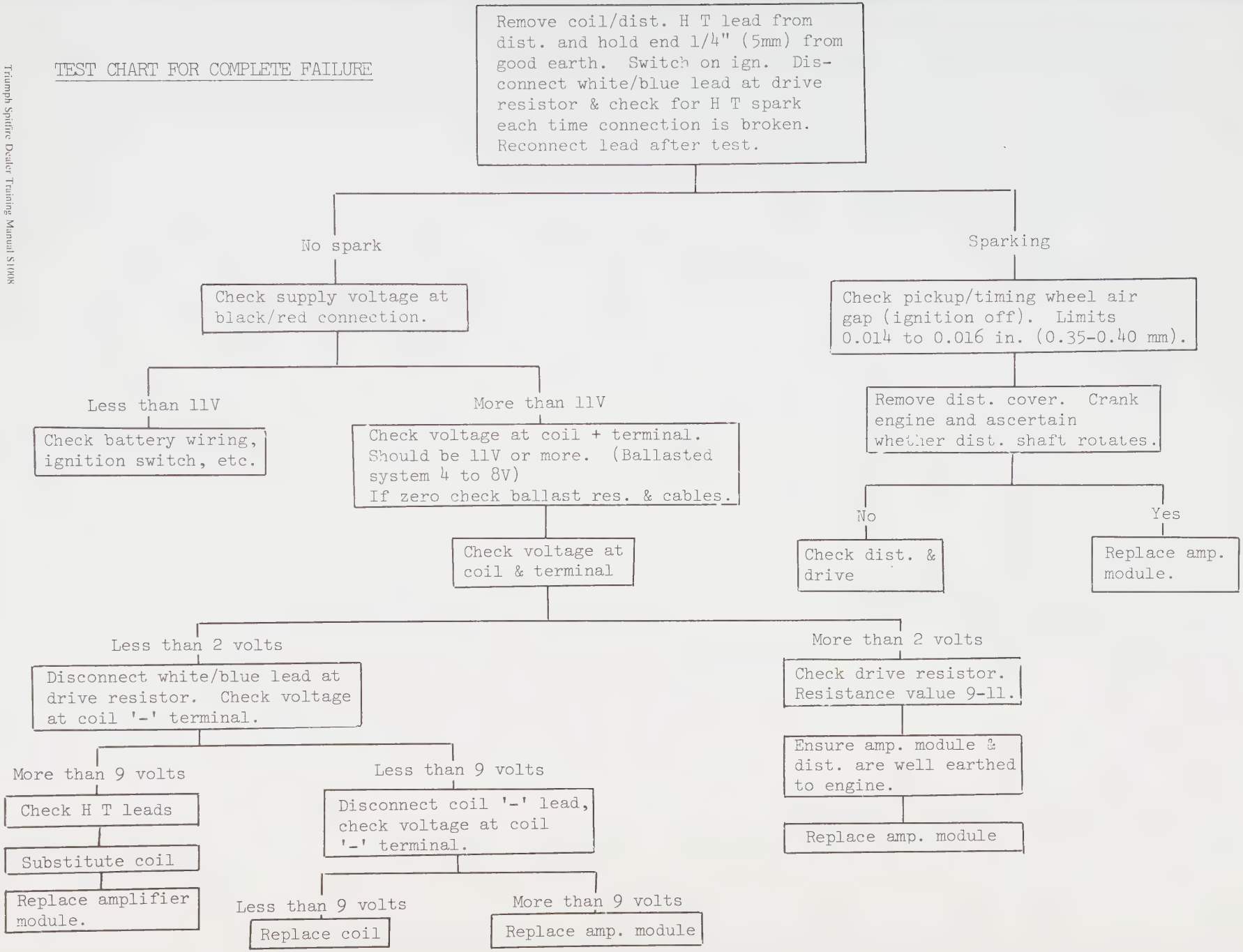

IGNITION DISTRIBUTOR – LUCAS TYPE 45DE4

– Ignition timing – adjust 86.35.15

The 'Opus electronic in built' ignition system provides a beneficial long dwell period with a short open period. For this reason a static adjustment using a test lamp is not practical. The test lamp would only flicker and would not provide an exact firing position.

If the engine can be run adjust dynamically as follows. If the engine cannot be run adjust statically as follows.

Dynamic

1. Connect a tachometer to the engine as instructed by the manufacturer.

   NOTE: The vehicle instrument panel tachometer may be used if no other instrument is available.
2. Connect a stroboscopic timing light as instructed by the manufacturer. The engine is timed on number one cylinder which is at the front of the engine.
3. Ensure that the retard unit pipe is connected.
4. Run the engine.
5. Position the timing light to illuminate the crankshaft pulley and timing cover scale.
6. Hold the speed at 700 to 900 r.p.m. Nominal 800 r.p.m.
7. The ignition timing should now be 2 degrees A.T.D.C.
8. If a correction is required perform operations 9 to 13.
9. Stop the engine.
10. Slacken the clamp bolt.
11. Rotate the distributor body slightly clockwise to advance the timing or anti-clockwise to retard the timing.
12. Tighten the distributor clamp bolt.
13. Repeat operation 4 onwards.

Static

14. Isolate the battery.
15. Rotate the crankshaft in the engine run direction to align the mark on the pulley with the 10 degree B.T.D.C. on the timing cover scale.
16. Remove the distributor cover.
17. Pull off the rotor.
18. Remove the plastic anti-flash cover.
19. Inspect the relationship of the pick-up to the nearest ferrite rod on the timing rotor. This should be positioned as shown.
20. If a correction is required perform operations 21 to 23.
21. Slacken the clamp bolt.
22. Rotate the distributor body as required to achieve the position shown.
23. Tighten the clamp bolt.
24. Fit the plastic anti-flash cover.
25. Push on the rotor.
26. Fit the cover.
27. Connect the battery.
28. When the engine can be run adjust the ignition timing dynamically as detailed previously.

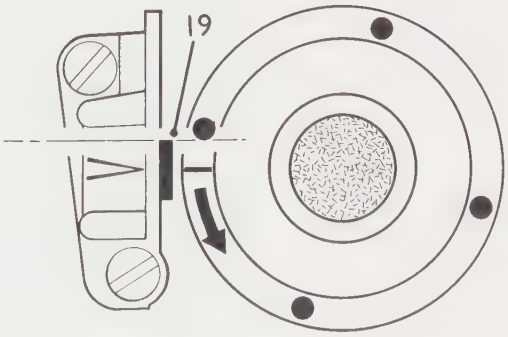

A86 O63 A

86.35.15

IGNITION DISTRIBUTOR – LUCAS TYPE 45DE4

– Lubrication 86.35.18

1. Remove the cover.
2. Pull off the rotor.
3. Remove the plastic anti-flash cover.
4. Apply a few drops of engine oil to the felt pad to lubricate the rotor carrier bearing.
5. Inject a few drops of engine oil through the apertures to lubricate the centrifugal timing control.
6. Apply one drop of engine oil to each of the two lubrication apertures of the moving plate bearing.

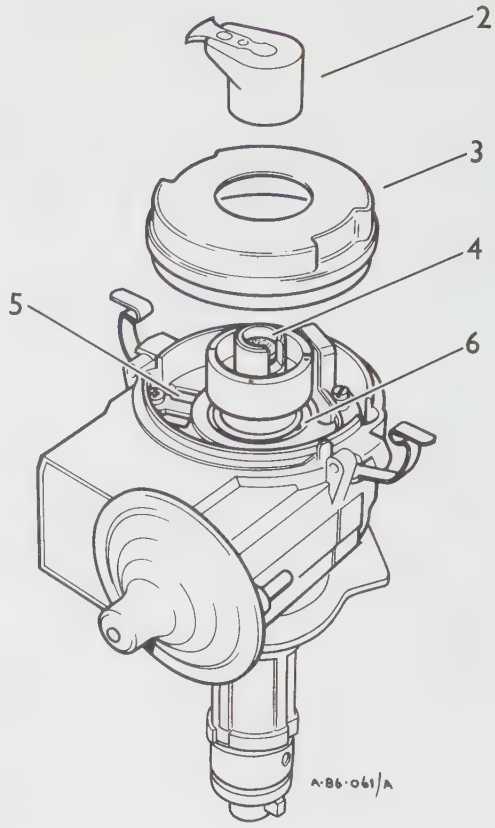

IGNITION DISTRIBUTOR – LUCAS TYPE 45DE4

– Remove and refit 86.35.20

CAUTION: Do not connect the ignition distributor wires listed below direct to the battery positive supply:
White wire with blue indent.
White wire with black indent.

Remove

1. Isolate the battery.
2. Remove the distributor cover.
3. Disconnect the retard unit pipe.
4. Disconnect three wire connectors.
5. Remove the nut, bolt and spring washer securing the distributor clamp bracket to the pedestal.
6. Carefully withdraw the distributor from the block.

Refit

7. Rotate the crankshaft until No. 1 piston is at T.D.C. and the offset distributor drive gear is in the position shown.
8. Reverse instruction 1 to 6.
9. Adjust the ignition timing as necessary. 86.35.15.

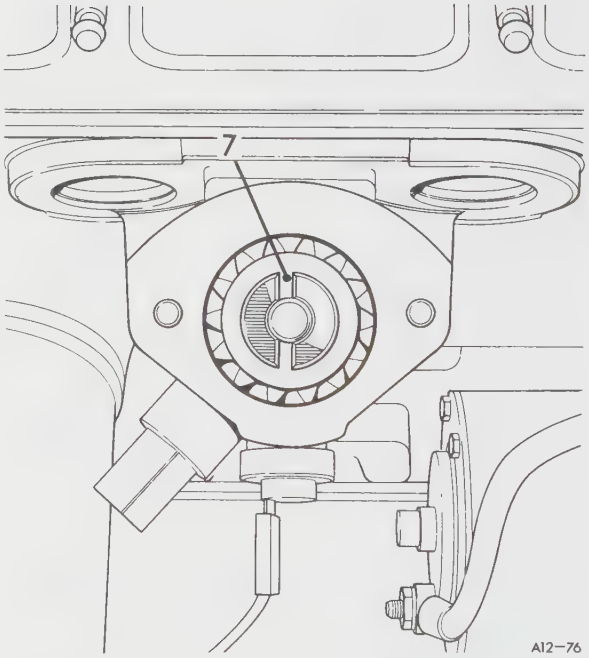

IGNITION DISTRIBUTOR – LUCAS TYPE 45DE4

– Overhaul 86.35.26

Dismantling

1. Remove the cover.
2. Pull off the rotor.
3. Remove the plastic anti-flash cover.
4. Withdraw the felt pad.
5. Carefully remove two screws, lock washers and washers to release the pick up.
6. Remove two long screws and lock washers.
7. Holding the amplifier module in position, remove one short screw, lock washer and washer.
8. Hold the distributor body in one hand and the amplifier module in the other hand. Carefully manoeuvre to unhook the retard unit link from the moving plate pin. This operation will not be visible.
9. Hold the distributor and amplifier bodies slightly apart and withdraw the two cover clips.
10. Pull out the wire grommet. Remove the amplifier module and pick up which are joined together by the wires.
11. Tap out the retard unit pin and withdraw the retard unit.
12. Using a suitable pair of small circlip pliers remove the circlip.
13. Remove the plain washer.
14. Remove the rubber 'O' ring.
15. Carefully withdraw the timing rotor.
16. Remove two screws securing the base plate and lift out the base plate.
17. Tap out the drive gear pin and remove the drive gear and thrust washer.
18. Ensure that the shaft is burr free and withdraw it.
19. Remove the distance collar.
20. Remove the control springs exercising care not to distort the springs.

NOTE: Do not attempt to dismantle the 'shaft and mechanism' any further.

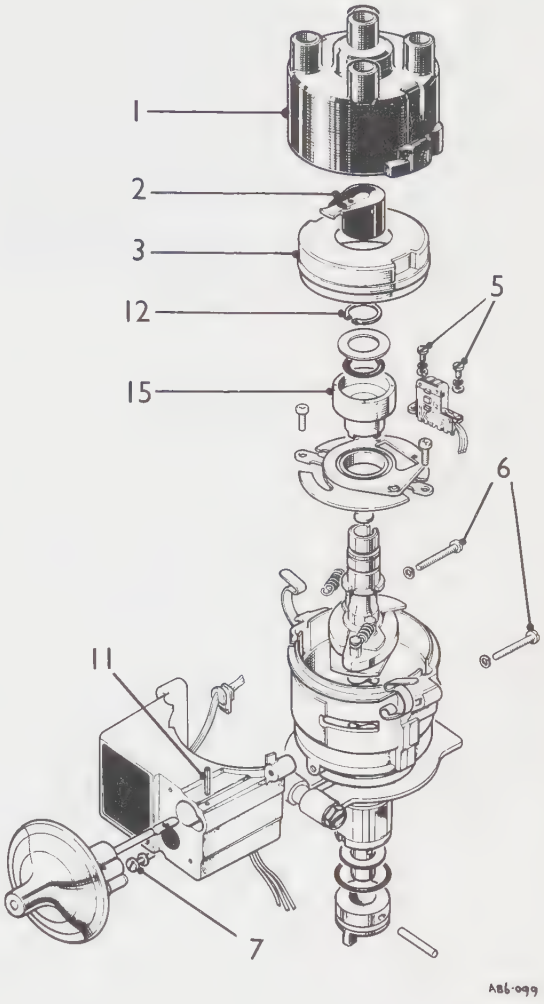

Assembling

21. Lubricate the weight assembly working surfaces with Rocol 'Moly pad'.
22. Fit the control springs, exercising care not to distort them.
23. Fit the metal distance collar.
24. Lubricate the shaft with Rocol 'Moly pad' and insert it into the body. Fit the thrust washer and the drive gear pin.
25. Lubricate the moving plate pin with Rocol 'Moly pad'. Position the base plate so that the moving plate pin is correctly positioned for the retard unit link and secure with the two screws.
26. Carefully insert the timing rotor, ensuring that the master projection locates correctly in the master slot.
27. Fit the rubber 'O' ring.
28. Fit the plain washer.
29. Fit the circlip.
30. Insert the retard unit and secure with the retard unit pin.
31. Holding the distributor body and the amplifier module slightly apart, push in the wire grommet.
32. Insert the two clips.
33. Hold the distributor body in one hand and the amplifier module in the other hand and carefully manoeuvre the moving plate, rotating slightly to hook onto the retard unit link. This operation will not be visible.
34. Holding the amplifier module in position fit one short screw, lock washer and washer, tightening finger tight.
35. Fit the two long screws and lockwashers, tightening finger tight.
36. Ensure that the amplifier module and the two wire grommets are correctly seated. Evenly tighten the three screws.
37. Position the pick up, securing with the two screws, and tighten finger tight.
38. Adjust the pick up air gap. 86.35.31.
39. Insert the felt pad.
40. Lubricate. 86.35.18.
41. Fit the plastic anti flash cover locating the two recesses adjacent to the clips.
42. Push on the rotor.
43. Fit the cover.

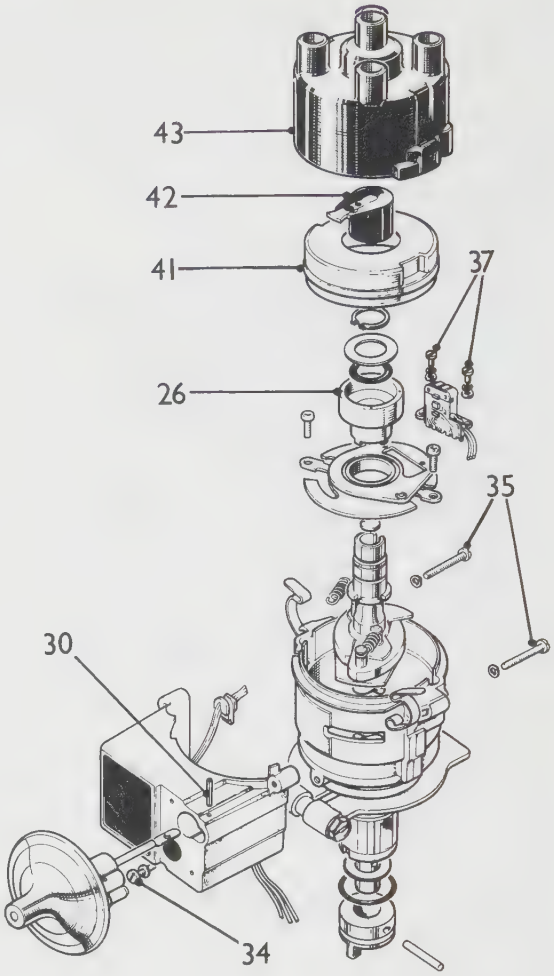

AB6 065

IGNITION DISTRIBUTOR – LUCAS TYPE 45DE4

– Pick up air gap – adjust 86.35.31

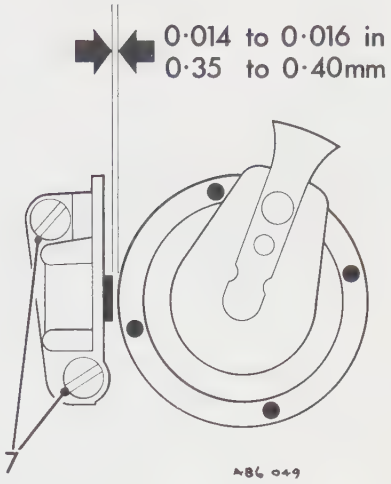

CAUTION: Do not insert a feeler gauge into the pick up air gap when the circuit is energised.

1. Isolate the battery.
2. Remove the cover.
3. Pull off the rotor.
4. Remove the plastic anti-flash cover.
5. If the pick up gap is correct a 0.014 to 0.016 in (0.35 to 0.40 mm) feeler gauge will just slide in between the contacts.
6. When the pick up air gap is correct operations 7 to 10 may be ignored.
7. If a correction is required slacken the two screws.
8. Move the pick up about the pivot screw to adjust the gap.
9. Tighten the two screws.
10. Check that the correct gap has been maintained.

CAUTION: Ensure that this operation is performed as the gap may change substantially when tightening the screws.

11. Connect the battery.

IGNITION COIL AND BALLAST RESISTOR

– Ignition coil – remove and refit 86.35.32

Removing

1. Disconnect the two low tension Lucar connectors.
2. Pull off the high tension lead.
3. Remove the two screws, spring washers and washers, and lift out the coil.

Refitting

4. Position the coil and secure it with two washers, spring washers and screws. Include in the left hand screw assembly the ballast resistor lug.
5. Push on the high tension lead.
6. Connect the two low tension Lucar connectors as follows:
   White/yellow wire to positive terminal.
   White/black wire to negative terminal.

DRIVE RESISTOR

– Remove and refit 86.35.37

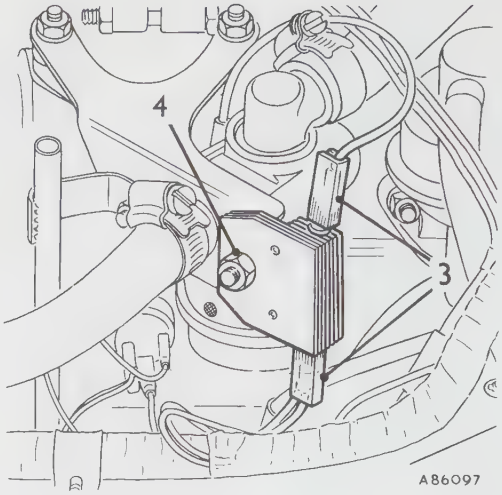

Removing

1. Open the bonnet.
2. Locate the drive resistor, which is mounted to the diverter and relief valve bracket.
3. Disconnect the two Lucar connectors.
4. Remove the nut, spring washer and bolt securing the drive resistor to the bracket.

Refitting

5. Reverse instructions 1 to 4. The Lucar connectors can be fitted either way round.

LAMPS

– Headlamp – remove and refit 86.40.02

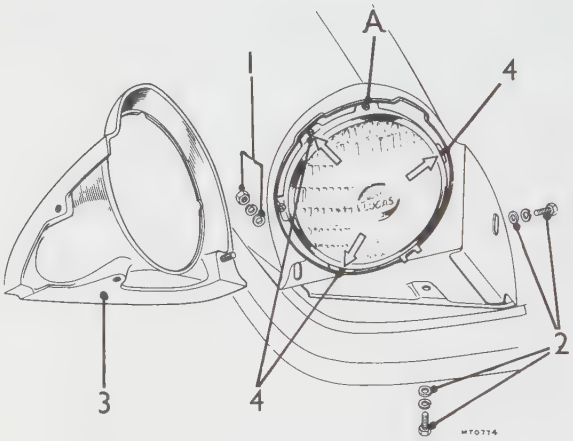

Removing

1. Remove the nut, spring washer and plain washer.
2. Remove the two bolts, spring washers and plain washers.
3. Lift off the headlamp surround.
4. Remove three screws and lift off the light unit retaining rim.

   NOTE: Do not disturb the two screws 'A' unless beam alignment is intended.
5. Pull the connector from the light unit.

Refitting

6. Reverse instructions 1 to 5.

LAMPS

– Headlamp beam alignment 86.40.17

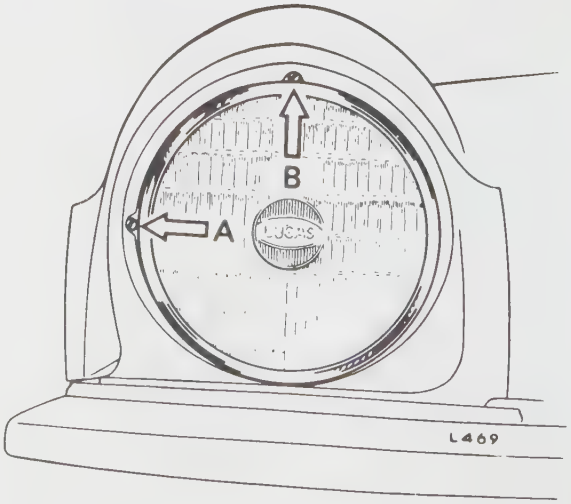

Screw 'A' positions the beam in the horizontal plane. Screw 'B' controls beam height.

Beam aiming can best be accomplished using equipment such as Lucas 'Beam-setter' or 'Lev-L-Lite'. This service is available at Triumph distributors or dealers and will ensure maximum road illumination with minimum discomfort to other road users.

LAMPS

– Front parking and flasher lamp – remove and refit 86.40.26

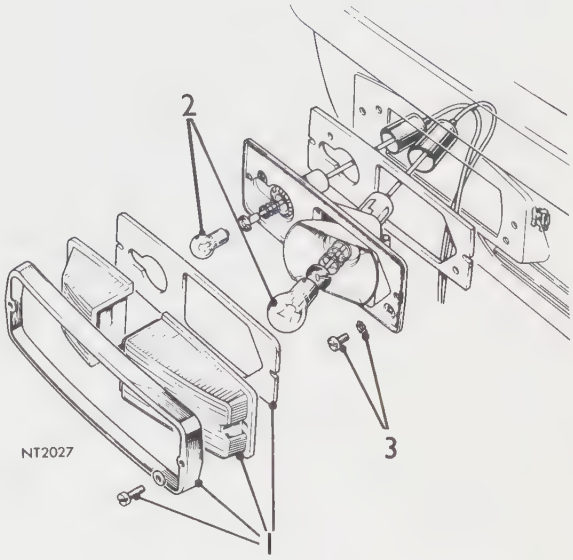

Removing

1. Remove the two screws and withdraw the rim, two lenses and gasket.
2. Remove the two bulbs from the bayonet fittings.
3. Remove the two screws and withdraw the lamp base and gasket.
4. Disconnect the earth wire from the lamp base.
5. Disconnect the two wires from the snap connectors.

Refitting

7. Reverse instructions 1 to 5.

LAMPS

– Front parking and flasher lamp (U.S.A. only) – remove and refit 86.40.26

Removing

1. Remove the two screws and withdraw the rim and lens.
2. Remove the bulb from the bayonet fitting.
3. Remove the two screws and withdraw the lamp base and gasket.
4. Disconnect the earth wire from the lamp base.
5. Disconnect the two wires from the snap connectors.

Refitting

6. Reverse instructions 1 to 5.

LAMPS

– Front marker lamp (U.S.A. only)
– remove and refit 86.40.59

Removing

1. Using a screwdriver, carefully prise the rim out of the lamp base.
2. Carefully pull out the lamp lens.
3. Remove the bulb from the bayonet fitting.
4. Carefully pull out the reflector lens.
5. Raise the bonnet.
6. Disconnect the red wire from the snap connector centrally located at the front of the bonnet.
7. Disconnect the black wire from the lamp.
8. Remove the three nuts, plain and rubber washers.
9. Withdraw the lamp base together with the bulb holder, wire and reflector base.
10. Remove the reflector base.
11. Remove the bulb holder and wire.

Refitting

12. Reverse instructions 1 to 11.

LAMPS

– Rear marker lamp (U.S.A. only)

– Remove and refit 86.40.64

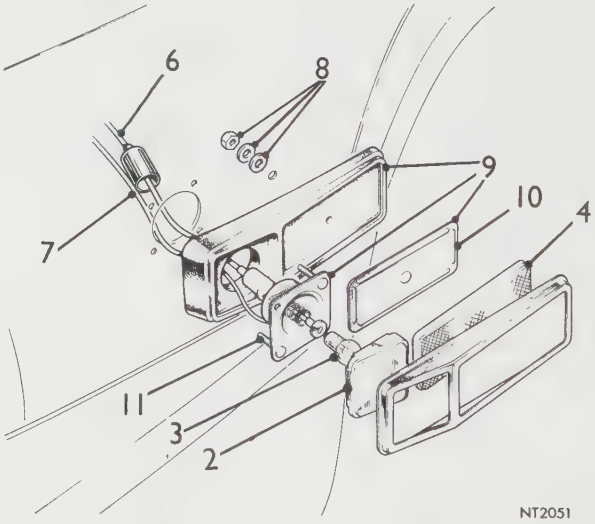

Removing

1. Using a screwdriver, carefully prise the rim out of the lamp base.
2. Carefully pull out the lamp lens.
3. Remove the bulb from the bayonet fitting.
4. Carefully pull out the reflector lens.
5. Open the luggage compartment lid.
6. Disconnect the red wire from the snap connector.
7. Disconnect the black wire from the lamp.
8. Remove the three nuts, plain washers and rubber washers.
9. Withdraw the lamp base together with the bulb holder, wire and reflector base.
10. Remove the reflector base.
11. Remove the bulb holder and wire.

Refitting

12. Reverse instructions 1 to 11.

LAMPS

– Rear tail/stop, flasher and reverse lamp
– remove and refit 86.40.70

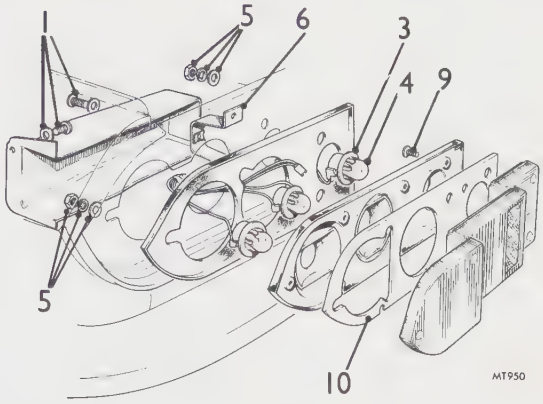

Removing

1. Remove the two screws and plain washers securing the lamp cover.
2. Disconnect the Lucar connector.
3. Pull out the three bulbholders.
4. Remove the three bulbs from the bayonet fittings.
5. Remove the five nuts, spring washers and plain washers securing the lamp to the body.
6. Detach the cover mounting bracket and withdraw the lamp.
7. Remove the flasher lamp lens – three screws.
8. Remove the tail/stop lamp lens – two screws.
9. Remove the reverse lamp lens – two screws.
10. Remove the lens seating gasket.

Refitting

11. Reverse instructions 1 to 10.

REAR NUMBER PLATE LAMP

– Remove and refit 86.40.86

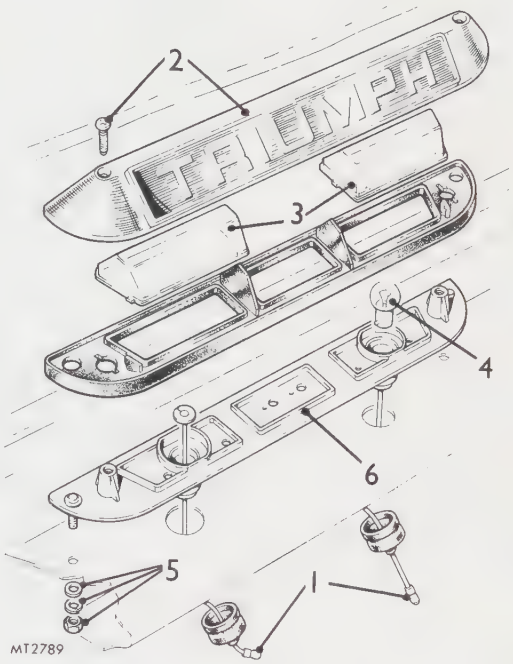

Removing *(Home market condition only)*

1. Disconnect the two leads from inside the luggage compartment and pull them through the panel grommet.
2. Remove two screws and lift off the cover.
3. Remove the lenses.
4. Remove the bulbs.
5. Remove the two nuts, spring washers and plain washers.
6. Remove the lamp base from the bumpers.

Refitting

7. Reverse instructions 1 to 6.

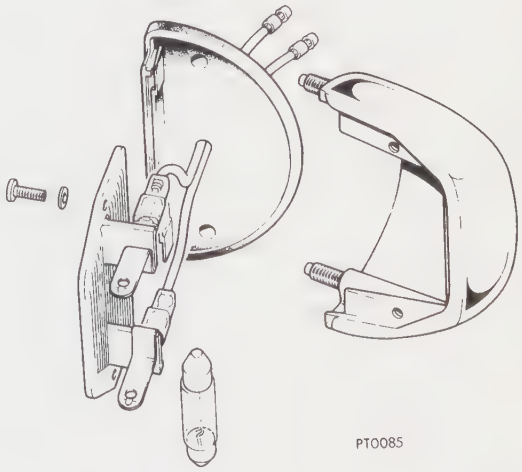

Removing *(U.S.A. market condition only)*

1. Remove two screws and washers and withdraw the lens assembly.
2. If required – carefully remove the festoon bulb.
3. Disconnect two leads behind the lamp in the luggage compartment.
4. Remove two nuts and plain washers and withdraw the lamp from the car.

Refitting *(U.S.A. market condition only)*

5. Reverse instructions 1 to 4 ensuring a good weather resistant seal.

EMISSION CONTROL SYSTEM

– Catalyst service warning lamp

– Remove and refit **86.45.60**

Removing

1. Lower the centre fascia to the service position. 76.46.02.
2. Pull out the bulb holder from the projection of the 'CATALYST SERVICE' unit.
3. If required remove the bulb from the bayonet fitting.
4. Push out the 'CATALYST SERVICE' unit from the fascia.

Refitting

5. Reverse instructions 1 to 4.

LAMPS

– Seat belt – warning light

– Remove and refit **86.45.75**

Removing

1. Lower the centre fascia to the service position. 76.46.02.
2. Pull out the bulb holder from the projection of the 'FASTEN BELTS' unit.
3. If required remove the bulb from the bayonet fitting.
4. Push out the 'FASTEN BELTS' unit from the fascia.

Refitting

5. Reverse instructions 1 to 4.

LAMPS

– Hazard warning lamp

– Remove and refit 86.45.76

Removing

1. Isolate the battery.
2. To gain access remove either the speedometer 88.30.01 or the tachometer 88.30.21. The choice depends entirely on which operation is preferred by the individual fitter.
3. Pull out the bulb holder from the projection of the 'HAZARD' unit.
4. If required remove the bulb from the bayonet fitting.
5. Push out the 'HAZARD' unit from the fascia.

Refitting

6. Reverse instructions 1 to 5.

LAMPS

– Brake failure warning lamp

– Remove and refit 86.45.77

Removing

1. Lower the centre fascia to the service position. 76.46.02.
2. Pull out the bulb holder from the projection of the 'BRAKE' unit.
3. If required remove the bulb from the bayonet fitting.
4. Push out the 'BRAKE' unit from the fascia.

Refitting

5. Reverse instructions 1 to 4.

LAMPS

– Key light – remove and refit 86.45.78

Removing

1. Locate the key light adjacent to the steering column lock assembly.
2. Pull out the bulb holder from the bracket.
3. If required unscrew the bulb from the holder.

Refitting

4. Reverse instructions 2 to 3.

EMISSION CONTROL SYSTEM

E.G.R. service warning lamp

– Remove and refit 86.45.84

Removing

1. Lower the centre fascia to the service position. 76.46.02.
2. Pull out the bulb holder from the projection of the 'E.G.R. SERVICE' unit.
3. If required remove the bulb from the bayonet fitting.
4. Push out the 'E.G.R. SERVICE' unit from the fascia.

Refitting

5. Reverse instructions 1 to 4.

LAMPS

– Wash/wipe lamp – remove and refit 86.45.86

Removing

1. Working behind the fascia, pull out the bulb holder from the projection of the 'WASH WIPE' unit.
2. If required remove the bulb from the bayonet fitting.
3. Push out the 'WASH WIPE' unit from the fascia.

Refitting

4. Reverse instructions 1 to 3.

RELAYS

– Overdrive relay – remove and refit 86.55.04

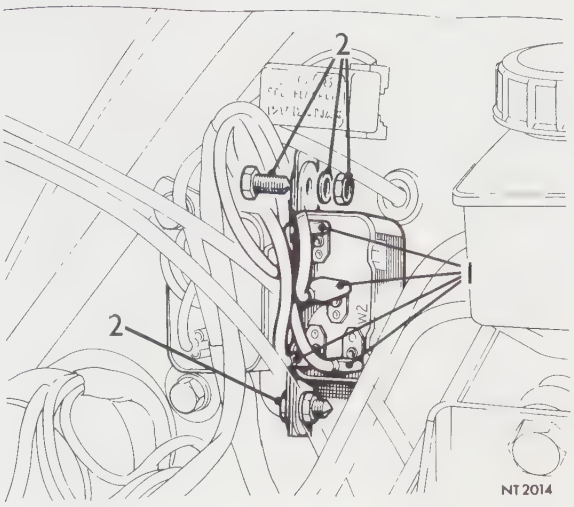

Removing

1. Disconnect the four Lucar connectors.
2. Remove the two nuts, bolts and plain washers securing the horn and overdrive relays to the bulkhead.

Refitting

3. Reverse instructions 1 and 2. Connect the Lucar connectors as follows:
   Brown wire to terminal C1.
   Yellow/purple wire to terminal C2.
   White wire to terminal W1.
   Yellow/green wire to terminal W2.

RELAYS

– Starter solenoid – remove and refit 86.55.05

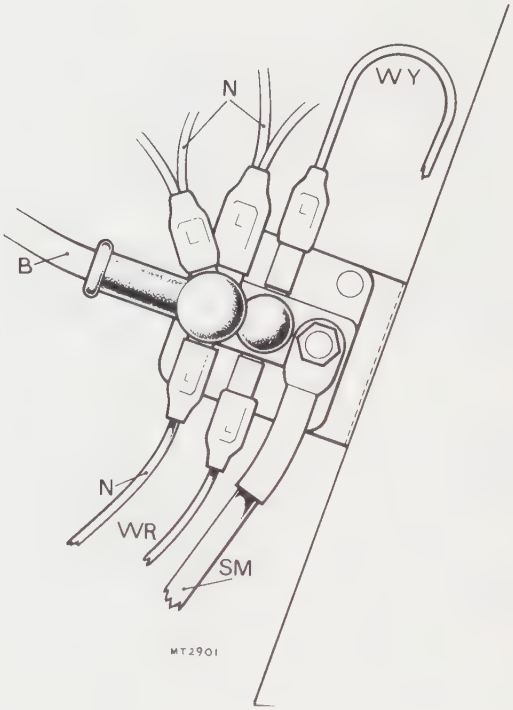

Removing

1. Isolate the battery.
2. Note the four wire colour codes and positions.
3. Disconnect the four Lucar connectors.
4. Note the position of the battery lead and starter motor lead. This is important to ensure correct operation of the ballast resistor starter system.
5. Pull back the rubber protector.
6. Remove the two nuts and spring washers. Disconnect the battery lead and starter motor lead.
7. Note the position of the solenoid.
8. Remove the two screws, washers and spring washers, and lift the solenoid from the vehicle.

Refitting

9. Reverse instructions 1 to 8. Ensure that the battery lead, starter motor lead and four Lucar connectors are positioned as shown. Ensure good electrical contact between the solenoid and the vehicle body.

B	Battery lead
N	Brown wire
WY	White/Yellow wire
N	Brown wire
WR	White/Red wire
SM	Starter motor lead

RELAYS

– Horn relay – remove and refit **86.55.09**

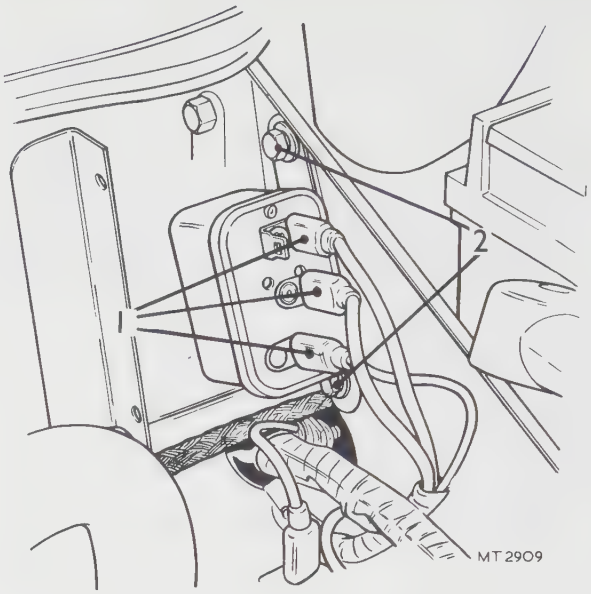

Removing

1. Disconnect the three Lucar connectors.
2. Remove the two bolts, spring washers and plain washer securing the relay to the bulkhead.

Refitting

3. Reverse instructions 1 and 2. Connect the Lucar connectors as follows:
   Purple/yellow wire to terminal C1
   Purple wires to terminal C2
   Purple/black wires to terminal W1

FLASHER UNIT

– Turn signal flasher unit – remove and refit **86.55.11**

Removing

1. Locate the flasher unit mounted in clip on the forward face of the fascia panel beneath the speedometer on right hand steer cars.
2. Pull the flasher unit from the clip.
3. Disconnect the two Lucar connectors.

Refitting

4. Connect the Lucar connectors: Green wire to terminal 'B'. Light green/brown wire to terminal 'L'.
5. Fit the flasher unit to the clip.

FLASHER UNITS

– Hazard flasher unit – remove and refit **86.55.12**

The hazard flasher unit (if fitted) is located on the left hand side of the bulkhead.

SEAT BELT WARNING SYSTEM

– Description 86.57.00

This system is designed to encourage people to make use of the seat belts.

European and U.K. markets

When the ignition is switched on the 'FASTEN BELTS' warning light on the fascia remains illuminated until the seat belts are fastened.

With the driver only in the vehicle the light is extinguished when the drivers seat belt is fastened.

With the driver and a passenger in the vehicle a switch in the passengers seat is actuated. The light is now extinguished when both the drivers and the passengers seat belts are fastened.

U.S.A. market – from Commission No. FM 32410.

When the ignition is switched on a 'FASTEN BELTS' warning light on the fascia illuminates and a buzzer provides an audible warning.

The light remains illuminated for 8 seconds irrespective of whether the seat belts are fastened or not.

The buzzer will sound for 8 seconds or until the seat belts are fastened, whichever is the sooner.

SEAT BELT WARNING

U.S.A. market – up to Commission No. FM 32409.

Earlier models where fitted with a SEAT BELT/ STARTER INTERLOCK system as required by the U.S. Federal Motor Vehicle Safety Standard No. 208.

The following sequence MUST be carried out in order to start the engine.

1. Sit on the seat.
2. Fasten the seat belt.
3. Start the engine.

When a front seat passenger is carried, operations 1 and 2 must also be carried out for the passengers seat before the engine will start.

If the above sequence is not carried out the starter motor will not crank over the engine.

SEAT BELT WARNING BUZZER/TIMER MODULE

– Remove and refit **86.57.08**

Removing

1. Locate the warning buzzer/timer module which is fitted in the car to the upper right hand side of the bulkhead.
2. Remove the multi-pin connector.
3. Remove the Posidriv screws and plain washers.
4. Remove the unit from the car.

Refitting

5. Reverse instructions 1 to 4.

KEY WARNING SYSTEM

– Description **86.58.00**

U.S.A. market

This system is designed to discourage leaving the ignition key in the lock with the vehicle unattended. While it should discourage theft it is not a comprehensive anti-theft device.

The system is actuated by opening the drivers door when the ignition key is still in the lock, when the system is actuated a buzzer provides an audible warning.

The system is cancelled when the ignition key is removed from the steering lock or when the drivers door is closed.

The drivers door switch in the circuit controls the electrical supply to the key warning circuit and the key light circuit.

The key switch is built into the steering column lock unit. Failure of the switch would necessitate the replacement of the steering column lock.

The same buzzer is used for the seat belt warning system and is an integral part of the timer module.

STARTER MOTOR

– Data and description

86.60.00

Manufacturer	Lucas
Type	M35J
Lucas Part No.	25149
Triumph Part No.	200535
Yoke diameter	3.5 in (88.90 mm)
Light running – current	65 amp
– speed	8,000 to 10,000 rev/min
Running torque – force	4.4 lbf ft (0.60 kgf m)
– current	260 to 275 amp
– speed	1,000 rev/min
Lock torque – force	7.0 lbf ft (0.95 kgf m)
– current	350 to 375 amp
Commutator minimum skimming thickness	0.080 in (2.03 mm)
Brush length – new	0.500 in (12.70 mm)
– renew if less than	0.375 in (9.53 mm)
Brush spring pressure	28 oz (800 g)

A series-wound, four-pole, four-brush motor with an extended shaft which carries a conventional inertia drive.

The armature shaft rotates in two porous bronze bushes. A squared extension of the shaft protrudes to enable the shaft to be rotated to clear any jamming between the inertia drive and engine flywheel ring gear. The armature features a face-type moulded commutator.

A plastic brush box is riveted to the commutator end bracket. It holds four wedge-shaped brushes and captive coil springs. The brushes are keyed to ensure correct fitting.

The field winding is a continuously wound strip with no joints. One end is attached to two brush flexibles, while the other is attached to a single flexible which is earthed to the yoke.

The yoke is windowless and has no through-bolts. The commutator end bracket is secured by four screws which align with tappings in the yoke. The drive end bracket is attached by two slot-headed bolts which screw into tappings provided in the end faces of two of the pole-shoes.

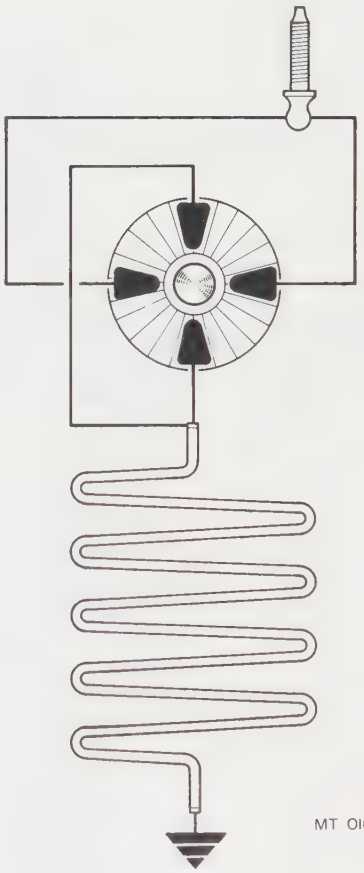

MT 0166

STARTER MOTOR

– Remove and refit **86.60.01**

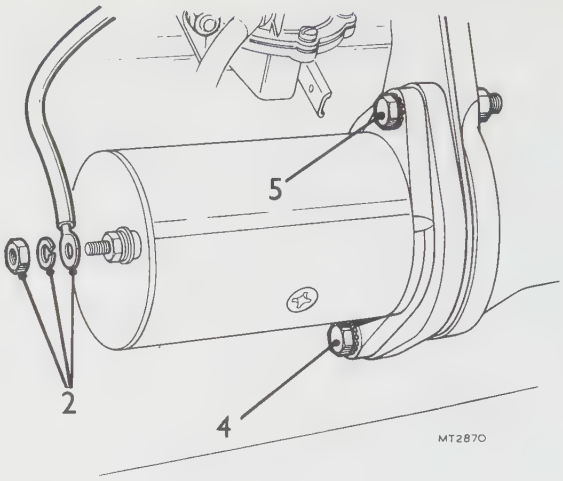

Removing

1. Isolate the battery.
2. Remove the nut and spring washer. Disconnect the lead from the terminal post.
3. Note the relationship between the starter motor, shims if fitted, packing and clutch housing.
4. Working from below the engine, remove the lower mounting bolt.
5. Working from above the engine, remove the upper mounting bolt.
6. Working from below the engine, withdraw the starter motor downwards from the vehicle complete with the packing and shims if fitted.

Refitting

7. Reverse instructions 1 to 6.

STARTER MOTOR

– Inertia drive – remove and refit **86.60.06**

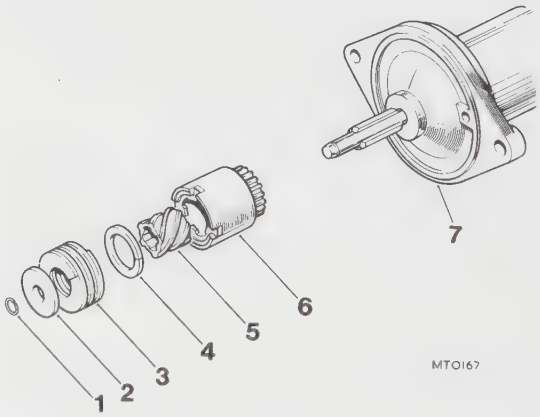

1. Jump ring
2. Shaft collar
3. Main spring
4. Buffer washer
5. Screwed sleeve
6. Pinion and barrel
7. Drive end bracket

Removing

1. Dismantle the starter motor 86.60.13 operations 1 to 5.
2. Using a suitable press, compress the main spring and ease the jump ring from the shaft. Churchill hand press S4221A and adaptor S4221A-14 may be employed to perform this operation.
3. Withdraw the inertia drive components from the shaft.

Refitting

4. Lightly lubricate the drive end bracket bush with thin engine oil. Position the drive end bracket.
5. Fit the inertia drive components to the shaft as shown. The screwed sleeve may be fitted either way round.
6. Using a suitable press, compress the main spring and fit the jump ring to the shaft.
7. Reassemble the starter motor. 86.60.13 operations 22 to 26.

STARTER MOTOR

– Overhaul 86.60.13

[CAUTION: Please read the instructions thoroughly before you attempt starter repairs. If you lack the necessary skills or tools we sugest you leave this work to an Authorized Dealer or other qualified shop. Before taking a removed starter in for repair, wipe clean its exterior but do not undertake any disassembly.]

Dismantling

1. Remove the two drive end bracket bolts and spring washers.
2. Withdráw the drive end bracket, armature and inertia drive assembly complete from the yoke.
3. Remove the thrust washer.
4. Remove the four 4B.A. bolts and lift aside the commutator end bracket.
5. Lift out the two field winding brushes from the brush box to separate the commutator end bracket from the yoke.

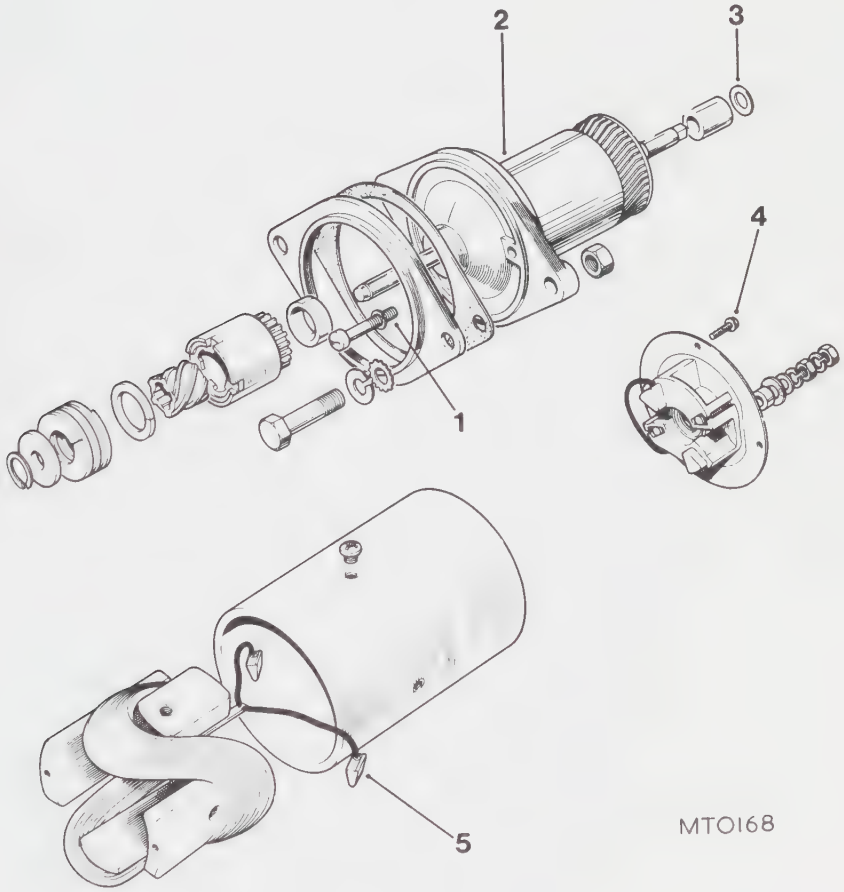

Armature

6. To separate the armature from the drive end bracket and inertia drive, perform the following: Remove the inertia drive, 86.60.06 and slide the drive end bracket from the shaft.
7. Inspect the laminations for score marks. These may indicate a bent shaft, worn bearings or a loose pole-shoe.
8. Clean the commutator with a petrol-moistened cloth. If the commutator is in good condition it will be smooth and free from pits or burned spots.
9. If necessary, polish the commutator with fine glass-paper.
10. If necessary, skim the commutator. Mount the armature in a lathe and rotate at high speed. Using a very sharp tool, take a light cut. Polish with fine glass-paper. Do not cut below the minimum skimming thickness given in Data. Do not undercut insulators between segments.

Bearings

11. Inspect the porous bronze bearing bushes for wear.
12. If necessary, renew the commutator end bracket bush. Drill out the two rivets and discard the plate and felt seal. Screw a ½ in tap squarely into the bush and withdraw. Prepare the porous bronze bush by immersing it in thin engine oil for 24 hours. Using a highly polished, shouldered mandrel suitably dimensioned and a suitable press, fit the bush. Do not ream the bush after fitting or its porosity may be impaired. Assemble the brush box, commutator end bracket, felt seal and plate. Secure with two rivets.
13. If necessary, renew the drive end bracket bush. Remove the inertia drive, 86.60.06, and slide the drive end bracket from the shaft. Support the bracket and press out the bush. Prepare the porous bronze bush by immersing it in thin engine oil for 24 hours. Using a highly polished, shouldered mandrel suitably dimensioned and a suitable press, fit the bush. Do not ream the bush after fitting or its porosity may be impaired.

Brushes

14. Clean the brushes and brush box with a petrol-moistened cloth.
15. Check that the brushes move freely in the brush box.
16. Check the brush spring pressure as shown. Position a new brush so that the top protrudes 0.060 in (1.50 mm) above the brush box. Brush spring pressure should be as given in Data. Repeat for the remaining three springs. If the pressure is low, renew the commutator end bracket assembly.
17. Check the brush length. Renew the brushes if less than the length given in Data.
18. If necessary, renew the commutator end bracket brushes. Brushes are supplied attached to a new terminal post. Withdraw the two brushes from the brush box. Remove the terminal post outer attachments. Withdraw the terminal post and remove the insulation piece. Reverse to assemble. Retain the longer flexible under the clip.
19. If necessary, renew the field winding brushes. Brushes are supplied attached to a common flexible. Cut the old flexibles 0.250 in (6 mm) from the joint. Solder the new flexible to the ends of the old flexible. Do not attempt to solder direct to the field winding strip as the strip may be produced from aluminium.

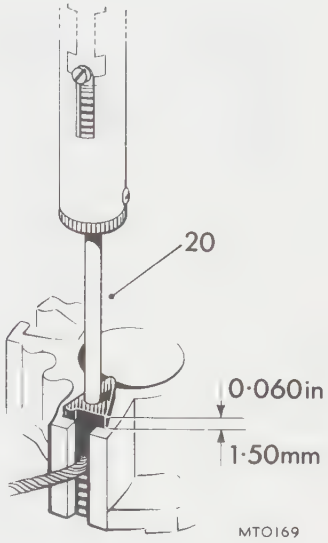

Field winding

20. If necessary, check the fields winding insulation from the yoke as follows: Drill out the rivet at the earth connection. Apply the normal 110 volt a.c. test lamp circuit to the field winding and yoke.
    Do not attempt to disconnect the flexible from the field winding strip as the strip may be produced from aluminium.
21. If necessary, renew the field winding. Drill out the rivet at the earth connection. Using a pole-shoe screwdriver, slacken the four pole-shoe screws. Remove the two diametrically opposite screws and pole-shoes. Slacken the remaining two screws sufficient to allow the field winding to be withdrawn from the yoke. Reverse to assemble.

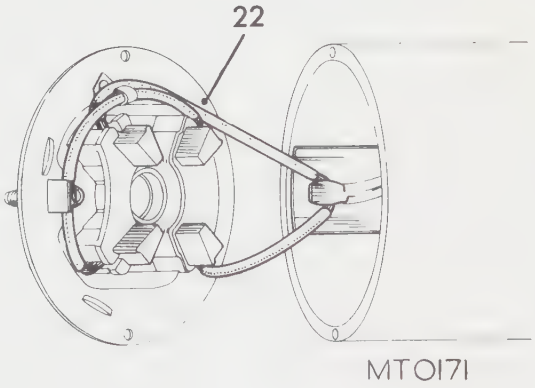

Reassembling

22. Insert the two field winding brushes into the brush box with the flexibles positioned as shown.
23. Position the commutator end bracket and secure it with four 4B.A. bolts.
24. Fit the thrust washer.
25. Insert the drive end bracket, armature and inertia drive assembly complete into the yoke.
26. Fit the two drive end bracket bolts and spring washers.

SWITCHES

Data 86.65.00

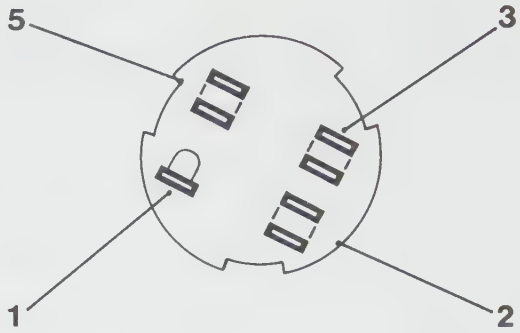

Ignition/starter switch

Position 0	Off	No connections
Position 1	Auxiliary	2 to 5
Position 2	Ignition	2 to 5 to 3
Position 3	Start	2 to 3 to 1

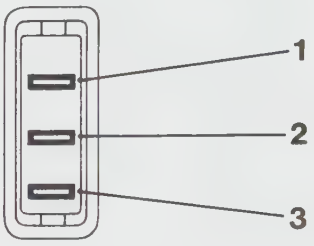

Master light switch

Position	Off	No connections
Position	Side	3 to 2
Position	Head	3 to 2 to 1

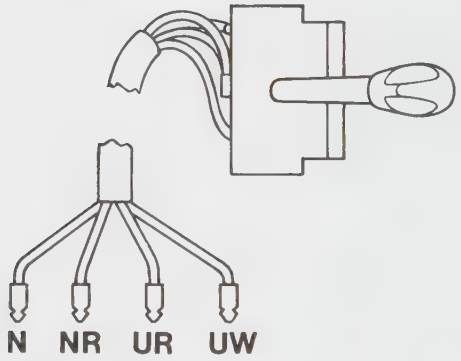

Column light switch

Position	Head main	U to UW
Position	Head dip	U to UR
Position	Head flash	P to UW

Windscreen wiper switch

Used when manual windscreen washer system is fitted to vehicle.

Position	Park	1 to 2
Position	Normal speed	3 to 2
Position	High speed	3 to 4

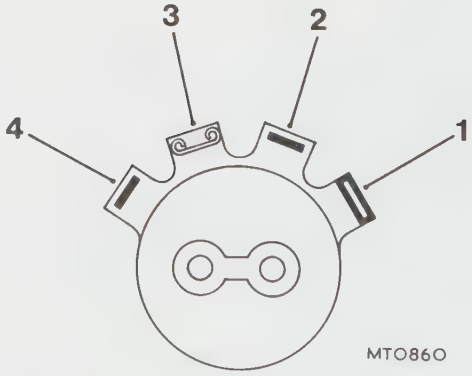

Heater switch

Position	Off	No connections
Position	Low speed	GY to earth
Position	High speed	GS to earth

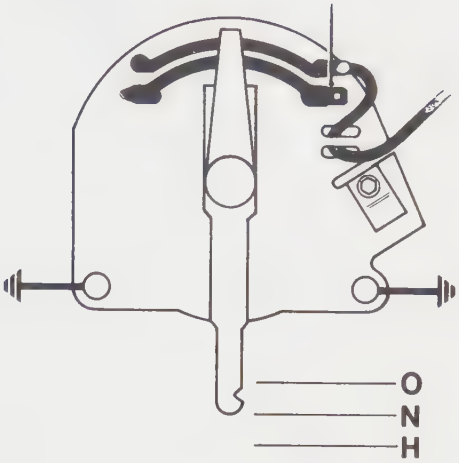

Turn signal switch

Position	Central	No connections
Position	L.H. turn signal	LG/N to GR
Position	R.H. turn signal	LG/N to GW

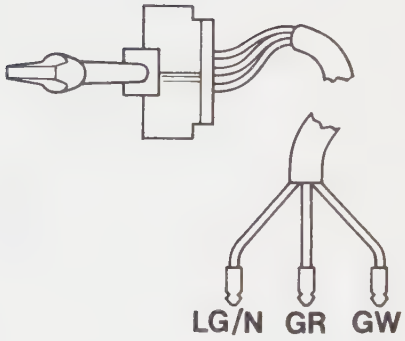

Door switch

Used when key warning system is not fitted to vehicle.

Position	Door closed	No connections
Position	Door open	Terminal to earth

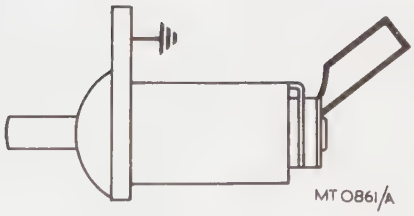

Door switch

Used when key warning system is fitted to vehicle.

Position	Door closed	No connections
Position	Door open	Two Lucar blades connected

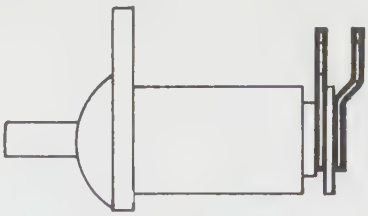

Windscreen washer/wiper switch

Used when electric washer pump is fitted to vehicle.

Position	Park	1 to 2
Position	Normal speed	3 to 2
Position	High speed	3 to 4
Position	Wash	Two centre terminals connected

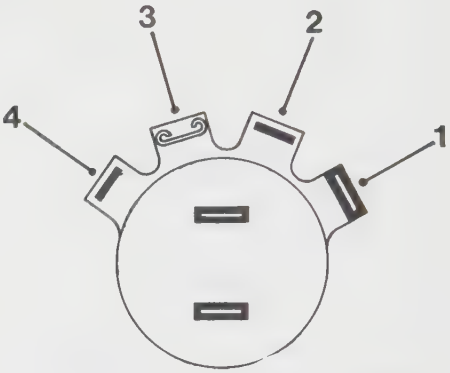

MT 0897

SWITCHES

– Ignition/Starter switch – remove and refit **86.65.02**

Removing

1. Isolate the battery.
2. Pull back the switch cover.
3. Withdraw the switch.
4. Disconnect the five Lucar connectors.

Refitting

5. Reverse instructions 1 to 3. When inserting the switch into the steering column lock assembly, note the keyway and ensure that the lock shaft and switch are aligned for correct engagement.
6. Connect the wires as follows:
   White/red to terminal 1.
   Brown to terminal 2
   White to terminal 3
   White/pink to terminal 5

SWITCHES

– Master light switch – remove and refit **86.65.09**

Removing

1. Lower the centre fascia to the service position 76.46.02 operations 1 to 4.
2. Disconnect the three Lucar connectors.
3. Compress the springs and push out the switch.

Refitting

4. Reverse instructions 1 to 3.

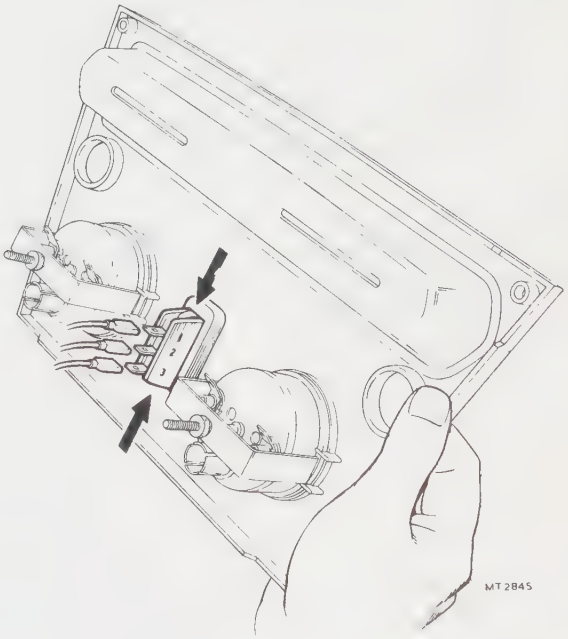

SWITCHES

– Door switch – remove and refit **86.65.14**

Removing

1. Isolate the battery.
2. Remove the screw.
3. Remove the switch.
4. Disconnect the terminal(s).

Refitting

5. Reverse instructions 1 to 4.

SWITCHES

– Column light switch – remove and refit **86.65.17**

Removing

1. Isolate the battery.
2. Remove the switch fairings – two screws.
3. Remove the two Allen screws and spring washers securing the steering column clamp. Remove the clamp and the harness cover.
4. Disconnect the four snap connectors.
5. Remove the two screws and spring washers.
6. Carefully withdraw the switch and leads.

Refitting

7. Reverse instructions 1 to 6. Ensure that the wires are connected as follows:
   Blue/Red to Blue/red
   Blue/White to Blue/White
   Brown/Red to Blue
   Brown to Purple
   The inconsistencies enable a common switch to be used on different circuits.

SWITCHES

– Horn push – remove and refit 86.65.18

Removing

1. Pull off the steering wheel centre pad.
2. Prise out the horn push.
3. Withdraw the horn brush.

Refitting

4. Reverse instructions 1 to 3, ensuring that the horn push contact strip is positioned over the horn brush.

SWITCHES

– Reverse lamp switch – remove and refit 86.65.20

Removing

1. Remove the gearbox tunnel cover. 76.25.07.
2. Disconnect the two snap connectors.
3. Unscrew the reverse lamp switch.

Refitting

4. Reverse instructions 1 to 3.

SWITCHES

– Seat belt – gearbox switch – remove and refit 86.65.28

Early U.S.A. market vehicles only up to Commission No. FM 32409

Removing

1. Remove the gearbox tunnel cover. 76.25.07.
2. Locate the required switch.
3. Disconnect two Lucar connectors.
4. Using a spanner on the hexagon, unscrew the switch.

Refitting

5. Fit the switch to the gearbox.
6. Connect two Lucar connectors. The connectors may be fitted either way round.
7. Perform a functional check of the seat belt warning circuit.
8. Refit the gearbox tunnel cover. 76.25.07.

SWITCHES

– Seat belt – drivers seat switch

Early U.S.A. market only.
– Remove and refit **86.65.29**

– Seat belt – passengers seat switch
Early U.S.A. market vehicles and Home market and European

Removing

1. Remove the passengers seat from the vehicle. 76.70.05.

   NOTE: To assist refitting, note the wire run through the seat.

2. Release the fabricated rivets and withdraw the switch and leads.

Refitting

3. Reverse instructions 1 and 2.

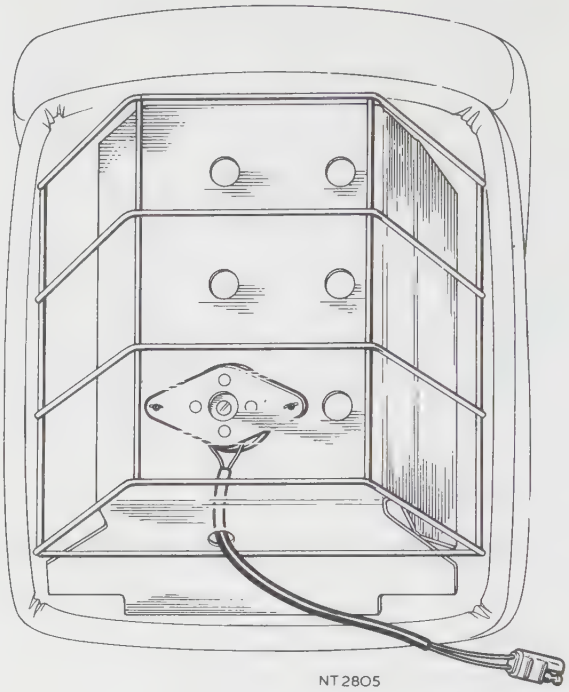

SWITCHES

– Oil pressure switch – remove and refit **86.65.30**

Removing

1. Disconnect Lucar connector.

   NOTE: On later U.S.A. market cars there are three Lucar connectors to the oil pressure switch. Note the relative positions of these connectors before withdrawing them from the switch.

Refitting

3. Screw switch into block and tighten to 11 to 14 lbf ft (1.5 to 2.0 kg m). Thread is tapered. Do not attempt to seat switch shoulder.
4. Connect Lucar connector.

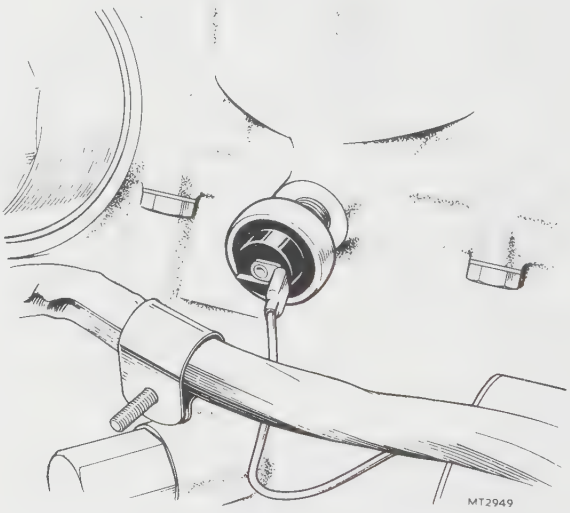

SWITCHES

– Seat belt – drivers belt switch – remove and refit 86.65.31

– Seat belt – passengers belt switch – remove and refit 86.65.32

Early U.S.A. market vehicles, Home market and European.

Removing

1. Lift the carpet at the rear of the seatwell and disconnect the electrical harness plug.
2. Remove single bolt and spring washer. Lift out the buckle and switch unit.

Refitting

3. Reverse instructions 1 to 3. If the sealing has been disturbed seal the large plain washer to the floor panel with an approved sealer to ensure a waterproof joint.

SWITCHES

– Overdrive gearbox switch – remove and refit 86.65.33

Removing

1. Remove the gearbox tunnel cover. 76.25.07.
2. Disconnect the two Lucar connectors.
3. Unscrew the switch.

Refitting

4. Reverse instructions 1 to 3.

SWITCHES

– Overdrive gear lever switch – remove and refit 86.65.34

Removing

1. Prise the switch from the gear lever knob (a slot at the rear of the knob enables a blade to be inserted).
2. Disconnect the two wires from the switch.

Refitting

3. Connect the two wires.
4. Clip the switch onto the gear lever knob.

SWITCHES

– Windscreen wiper switch – remove and refit 86.65.38

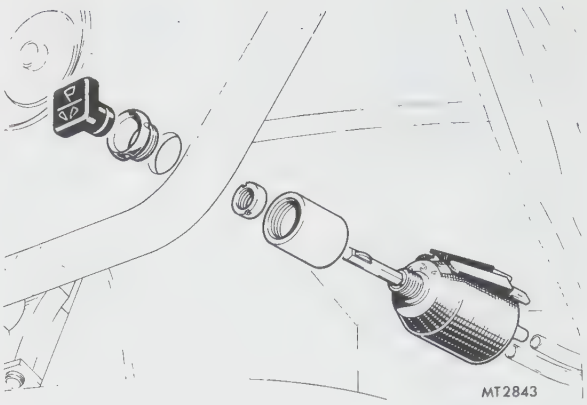

Removing

1. Isolate the battery.
2. Depress the retainer by inserting a suitable probe into the hole in the underside of the knob and pull the knob from the shaft.
3. Slacken the bezel using a suitable tool. Support the switch behind the fascia and unscrew the bezel.
4. Withdraw the switch and lower it into a visible position.
5. Disconnect the four Lucar connectors noting colour codes and positions for reconnection.
6. Pull off the two pipes, noting positions for reconnection.

Refitting

7. Ensure that the switch is securely attached to the spacer. If not tighten the slotted ring.
8. Reverse instruction 1 to 6.

SWITCHES

– Brake line failure switch – remove and refit 86.65.47

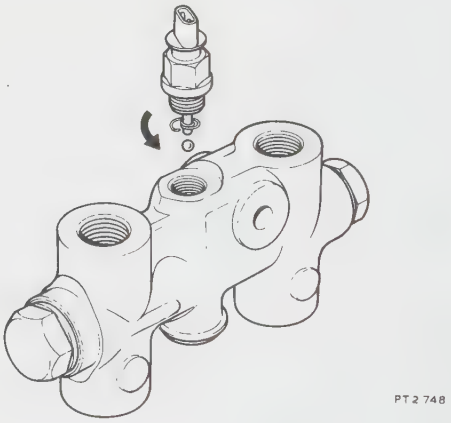

Removing

1. Pull back the retaining clips and withdraw the socket from the switch.
2. Unscrew the switch.

Refitting

3. Reverse instructions 1 and 2. Ensure that the earth connection spring is correctly located with the outer end pointing in an anti-clockwise direction as shown.

SWITCHES

– Hazard switch – remove and refit **86.65.50**

Left hand steer vehicles only

Removing

1. Isolate the battery.
2. To gain access remove either the speedometer 88.30.01 or the tachometer 88.30.21. The choice depends entirely on which operation is preferred by the individual operator.
3. Unscrew the knob from the switch and remove the bulb.
4. Unscrew the locking ring and withdraw the switch from the dash panel.
5. Disconnect the snap in block connector.

Refitting

6. Reverse instructions 1 to 5.

SWITCHES

– Stop lamp switch – remove and refit **86.65.51**

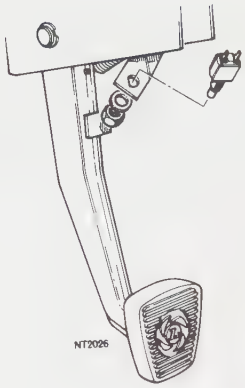

Removing

1. Disconnect the two Lucar connectors.
2. Remove the nut and plain washer.
3. Withdraw the switch from the mounting bracket.

Refitting

4. Reverse instructions 1 to 3.

SWITCHES

– Turn signal switch – remove and refit **86.65.54**

Removing

1. Remove the switch fairings – two screws.
2. Remove the two Allen screws and spring washers securing the steering column clamp. Remove the clamp and the harness cover.
3. Disconnect the three snap connectors.
4. Remove the two screws and spring washers.
5. Carefully withdraw the switch and leads.

Refitting

6. Reverse instructions 1 to 5.

CIGARETTE LIGHTER

– Remove and refit 86.65.60

Removing

1. Isolate the battery.
2. Withdraw the cigarette lighter heating unit.
3. Disconnect two 3 mm connectors and one Lucar connector.
4. Squeeze the sides of the bulb holder and withdraw.
5. If necessary, renew the bulb as follows: Unclip the bulb cowl from the bulb holder. Remove the bulb from the bayonet fitting.
6. Carefully insert a pair of long nosed pliers into the inner well to locate on the cross piece. Holding the outer well, unscrew the inner well from the outer well. Remove the illumination ring.

Refitting

7. Reverse 1 to 6. Fit the cigarette lighter so that the slots for the bulb cowl are uppermost. Connect the connectors.

   Purple wire to centre terminal
   Red/blue wire the bulb red/white wire
   Black wire to body earth terminal

FUSE SYSTEM

– Fuse – remove and refit 86.70.02

Removing

1. Lift the bonnet and locate the fusebox on the left hand side of the bulkhead.
2. Pull off the plastic cover.
3. Identify the defective fuse.
4. Carefully lever the fuse from the contacts.

Refitting

5. Reverse instructions 1 to 4.

INSTRUMENTS OPERATIONS

Fuel indicator – remove and refit 88.25.26

Fuel tank unit remove and refit 88.25.32

Service interval indicator – Catalyst – remove and refit 88.30.26

Service interval indicator – E.G.R. – remove and refit 88.30.25

Speedometer – remove and refit 88.30.01

Speedometer cable – complete – remove and refit 88.30.06

Speedometer cable – complete (upper) – U.S.A. only – remove and refit 88.30.08

Speedometer cable – complete (lower) – U.S.A. only – remove and refit 88.30.09

Speedometer cable inner – remove and refit 88.30.07

Tachometer – remove and refit 88.30.21

Temperature indicator – remove and refit 88.25.14

Temperature transmitter – remove and refit 88.25.20

Voltage stabilizer – remove and refit 88.20.26

VOLTAGE STABILISER

– Remove and refit 88.20.26

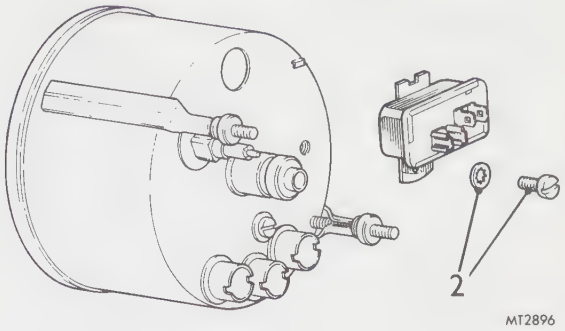

Removing

1. Remove the speedometer. 88.30.01.
2. Remove one screw and lift off the voltage stabiliser.

Refitting

3. Reverse instructions 1 and 2. Connect the Lucar connectors as follows:
   Green wire to terminal B. Light green wire to terminal I.

TEMPERATURE INDICATOR

– Remove and refit 88.25.14

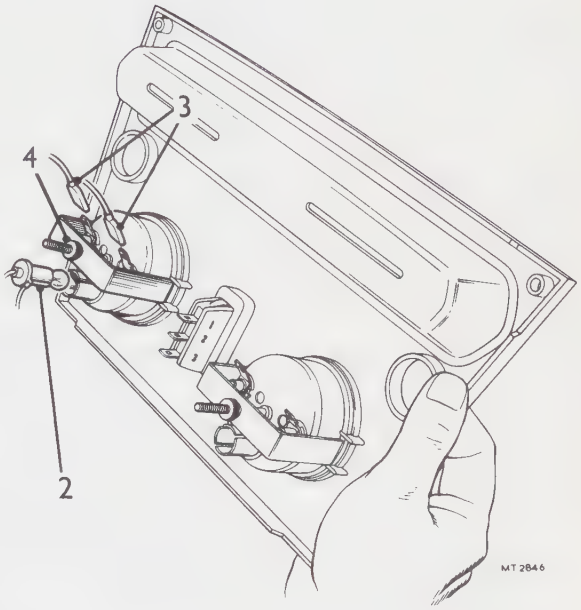

Removing

1. Lower the centre fascia to the service position. 76.46.02, instructions 1 to 4.
2. Pull out the panel light bulb holder.
3. Disconnect the two Lucar connectors.
4. Remove the knurled nut and spring washer.
5. Withdraw the indicator from the fascia centre.

Refitting

6. Reverse instructions 1 to 5.

TEMPERATURE TRANSMITTER

– Remove and refit 88.25.20

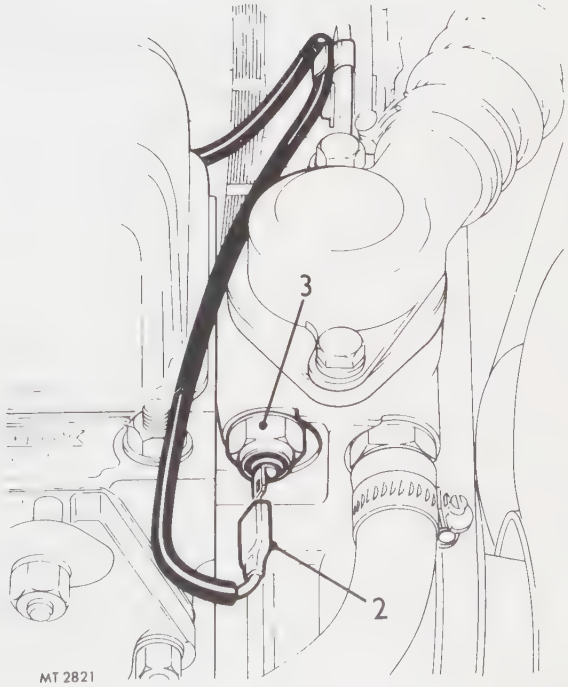

Removing

1. Drain part of the coolant. 26.10.01.
2. Disconnect the Lucar connector.
3. Unscrew the transmitter.

Refitting

4. Reverse instructions 1 to 3.

FUEL INDICATOR

Remove and refit 88.25.26

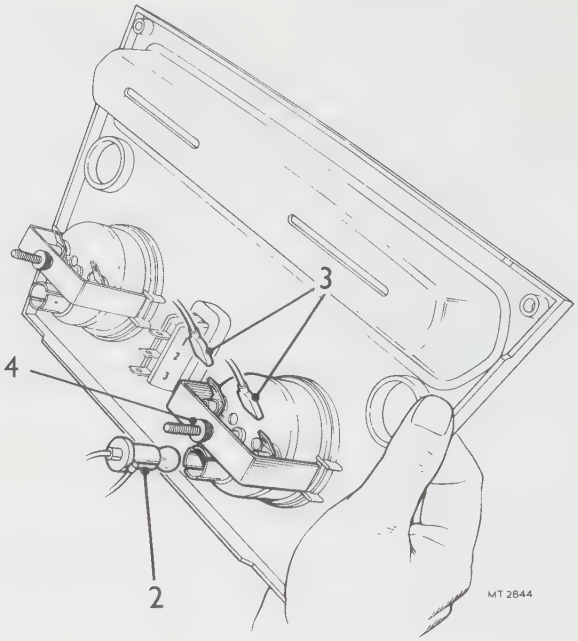

Removing

1. Lower the centre fascia to the service position. 76.46.02, instructions 1 to 4.
2. Pull out the panel light bulb holder.
3. Disconnect the two Lucar connectors.
4. Remove the knurled nut and spring washer.
5. Withdraw the indicator from the fascia centre.

Refitting

6. Reverse instructions 1 to 5.

FUEL TANK UNIT

– Remove and refit 88.25.32

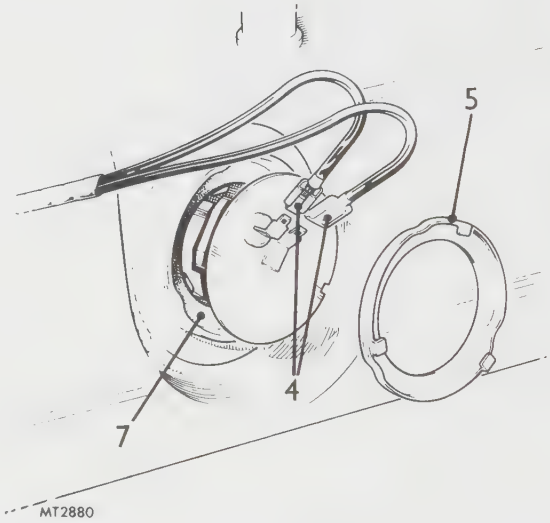

Removing

1. Isolate the battery and extinguish all naked lights.
2. Siphon the fuel out of the tank.
3. Remove the petrol tank rear casing board – seven screws, spring washers and plain washers.
4. Disconnect the two Lucar connectors noting positions for reconnection.
5. Release the locking ring by tapping anti-clockwise. Remove the locking ring.
6. Carefully withdraw the tank unit.
7. Remove the sealing washer.

Refitting

8. Reverse instructions 1 to 7.

SPEEDOMETER

– Remove and refit 88.30.01

Removing

1. Lower the centre fascia for access to the rear of the speedometer. 76.46.02, instructions 1 to 4.
2. Remove the tachometer for access to the rear of the speedometer. 88.30.21.
3. Depress the lever to release the catch from the annular groove in the boss. Detach the speedometer cable from the instrument.
4. Unscrew the trip reset knurled nut.
5. Remove the two knurled nuts, spring washers and clamp legs. Detach the earth wire.
6. Disconnect the two Lucar connectors from the voltage stabiliser.
7. Pull out the three warning light bulb holders.
8. Pull out the panel light bulb holder.

Refitting

9. Reverse instructions 4 to 8.
10. Using long nosed pliers, withdraw the inner cable about 1 in (25 mm).
11. Engage the inner cable to the instrument.
12. Push the outer cable over the boss, ensuring that the catch engages in the annular groove.
13. Refit the tachometer. 88.30.21.
14. Refit the centre fascia.

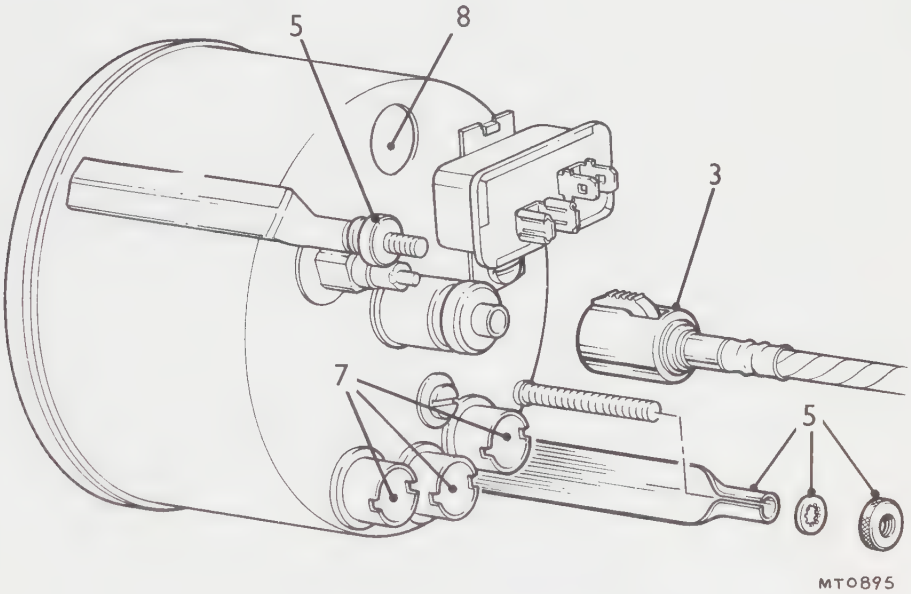

SPEEDOMETER CABLE – COMPLETE

– Remove and refit (non-overdrive models – except U.S.A.) **88.30.06**

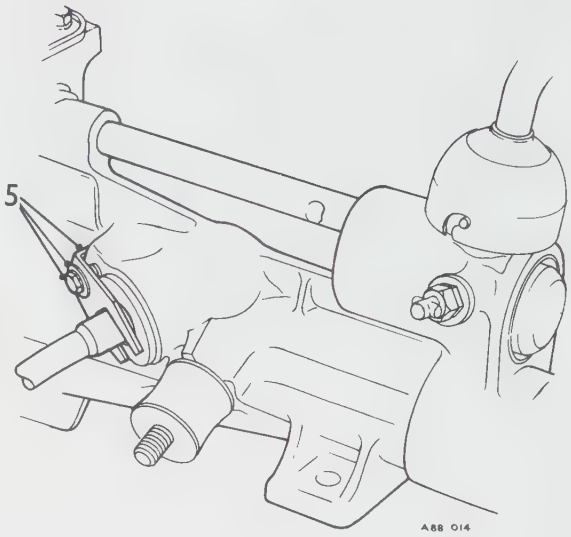

Removing

1. Place the vehicle on a ramp.
2. Remove the centre fascia for access to the rear of the speedometer. 76.46.02, instructions 1 to 4.
3. Remove the tachometer for access to the rear of the speedometer. 88.30.21.
4. Depress the lever to release the catch from the annular groove in the boss. Pull the speedometer cable from the instrument.
5. Working from below the vehicle, remove the bolt, spring washer, and clamping plate – detach the cable from the gearbox.
6. To assist refitting, carefully note the cable position relative to other components.
7. Manoeuvre the cable downwards through the grommet aperture and detach it from the vehicle.

Refitting

8. Reverse instructions 5 to 7. Seal the grommet to the bulkhead with Seelastik SR51.
9. Withdraw the inner cable about 1 in (25 mm).
10. Engage the inner cable to the instrument.
11. Push the outer cable over the boss, ensuring that the catch engages in the annular groove.
12. Refit the tachometer. 88.30.21.
13. Refit the centre fascia. 76.46.02.

SPEEDOMETER CABLE – COMPLETE

–Remove and refit (overdrive models only –except U.S.A.) **88.30.06**

Removing

1. Remove the centre fascia for access to the rear of the speedometer. 76.46.02, instructions 1 to 4.
2. Remove the tachometer for access to the rear of the speedometer. 88.30.21.
3. Depress the lever to release the catch from the annular groove in the boss. Pull the speedometer cable from the instrument.
4. Remove the gearbox tunnel cover. 76.25.07.
5. Unscrew the speedometer cable knurled nut from the gearbox extension.
6. To assist refitting, carefully note the cable position relative to the other components.
7. Manoeuvre the cable downwards through the grommet aperture and detach it from the vehicle.

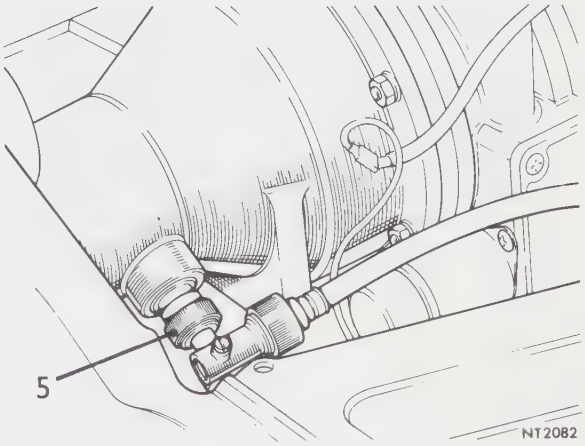

Refitting

8. Reverse instructions 4 to 7. Seal the grommet to the bulkhead with Seelastik SR51.
9. Withdraw the inner cable about 1 in (25 mm).
10. Engage the inner cable to the instrument.
11. Push the outer cable over the boss, ensuring that the catch engages in the annular groove.
12. Refit the tachometer. 88.30.21.
13. Refit the centre fascia. 76.46.02.

SPEEDOMETER CABLE – INNER

– Remove and refit **88.30.07**

Removing

1. Lower the centre fascia for access to the rear of the speedometer. 76.46.02, instructions 1 to 4.
2. Remove the tachometer for access to the rear of the speedometer. 88.30.21.
3. Depress the lever to release the catch from the annular groove in the boss. Pull the speedometer cable from the instrument.
4. Using long nosed pliers, withdraw the inner cable. Take care not to contaminate the upholstery or fittings with grease.

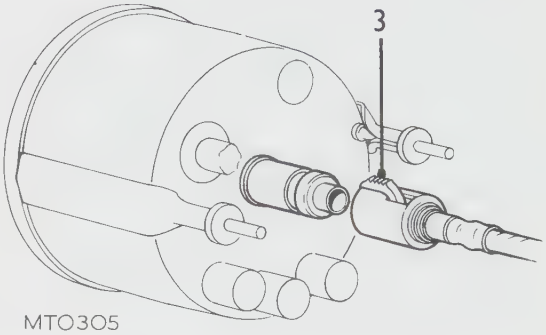

Refitting

5. Sparingly grease the inner cable. Do not use oil.
6. Feed the inner cable into the outer cable, rotating it slightly to assist operation.
7. Withdraw the inner cable about 8 in (200 mm) and wipe off surplus grease. Re-insert the inner cable, rotating it slightly to assist engagement of the squared end to the drive gear.
8. Withdraw the inner cable about 1 in (25 mm).
9. Engage the inner cable to the instrument.
10. Push the outer cable over the boss, ensuring that the catch engages in the annular groove.
11. Refit the tachometer. 88.30.21.
12. Refit the centre fascia. 76.46.02.

SPEEDOMETER CABLE – COMPLETE (UPPER) – USA models

– Remove and refit 88.30.08

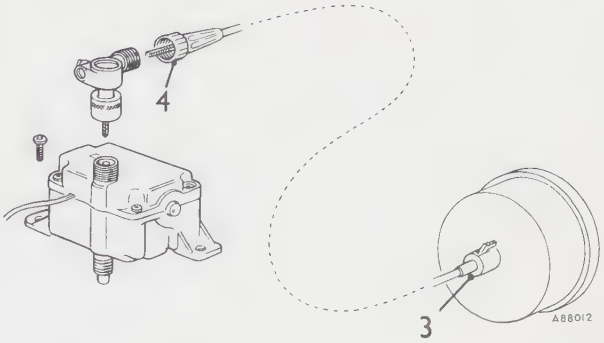

Removing

1. Remove the centre fascia for access to the rear of the speedometer. 76.46.02, instructions 1 to 4.
2. Remove the tachometer for access to the rear of the speedometer. 88.30.21.
3. Depress the lever to release the catch from the annular groove in the boss. Pull the speedometer cable from the instrument.
4. Unscrew the speedometer cable knurled nut from the extension above the E.G.R. service interval indicator.

Refitting

5. Reverse instructions 1 to 4

SPEEDOMETER CABLE – COMPLETE (LOWER) – USA models

– Remove and refit 88.30.09

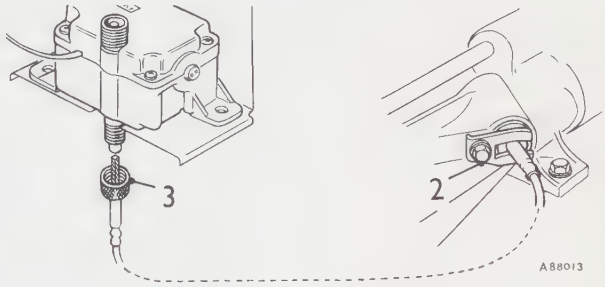

Removing

1. Place the vehicle on a ramp.
2. Working from below the vehicle, remove the bolt, spring washer and clamping plate – detach the cable from the gearbox.
3. Unscrew the knurled nut from beneath the service interval indicator and remove the cable from the vehicle.

Refitting

4. Reverse instructions 1 to 3.

TACHOMETER

– Remove and refit 88.30.21

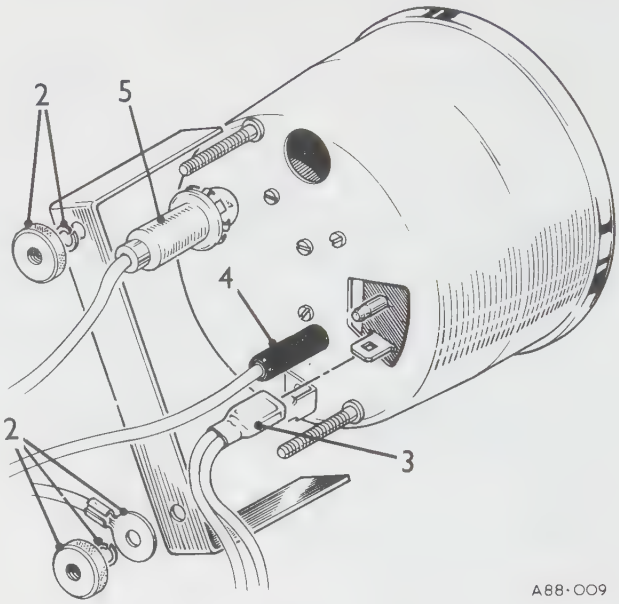

Removing

1. Lower the centre fascia to the service position. 76.46.02, instructions 1 to 4.
2. Remove the two knurled nuts and spring washers. Detach the earth lead from the clamp leg, remove the clamp and withdraw the tachometer.
3. Disconnect the twin green wire Lucar connector.
4. Disconnect the snap connector.
5. Pull out the panel light bulb holder.

Refitting

6. Reverse instructions 1 to 5.

SERVICE INTERVAL INDICATOR – E.G.R.

– Remove and refit 88.30.25

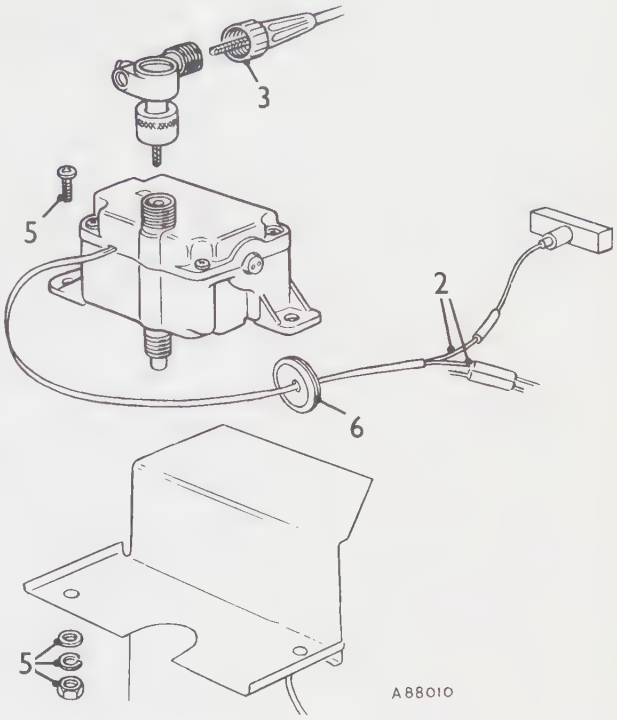

Removing

1. Lower the centre fascia to the service position. 76.46.02, instructions 1 to 4.
2. Disconnect the two snap connectors (1 green and 1 light green/white wire in plastic sleeve).
3. Unscrew the speedometer cable knurled nut from the extension above the indicator.
4. Unscrew the speedometer cable knurled nut from the extension beneath the indicator (except vehicles fitted with a catalyst service interval indicator).
5. Remove the two screws, nuts and washers securing the indicator to the bulkhead bracket.
6. Carefully pull the sleeved wires through the bulkhead grommet (and clip, if fitted) and remove the indicator from the vehicle.

Refitting

7. Reverse instructions 1 to 6.

   NOTE: On vehicles fitted with a catalyst service interval indicator, ensure that the drive shaft (lower end oval) and rubber sleeve are correctly positioned when refitting the E.G.R. service interval indicator.

SERVICE INTERVAL INDICATOR – CATALYST

– Remove and refit **88.30.26**

Removing

1. Lower the centre fascia to the service position. 76.46.02, instructions 1 to 4.
2. Disconnect the two snap connectors (1 green and 1 light green/white wire in plastic sleeve).
3. Remove the two screws, nuts and washers, securing the E.G.R. service interval indicator to the bulkhead bracket.
4. Carefully raise the E.G.R. service interval indicator and remove the drive shaft and rubber sleeve connecting it to the catalyst service interval indicator.
5. Unscrew the speedometer cable knurled nut from the extension beneath the catalyst service interval indicator.
6. Remove the two screws, nuts and washers securing the catalyst service interval indicator to the bulkhead bracket.
7. Carefully pull the sleeved wires through the bulkhead grommet (and clip, if fitted) and remove the indicator from the vehicle.

Refitting

8. Reverse instructions 1 to 7.

   NOTE: Ensure that the drive shaft (lower end oval) and rubber sleeve are correctly positioned.

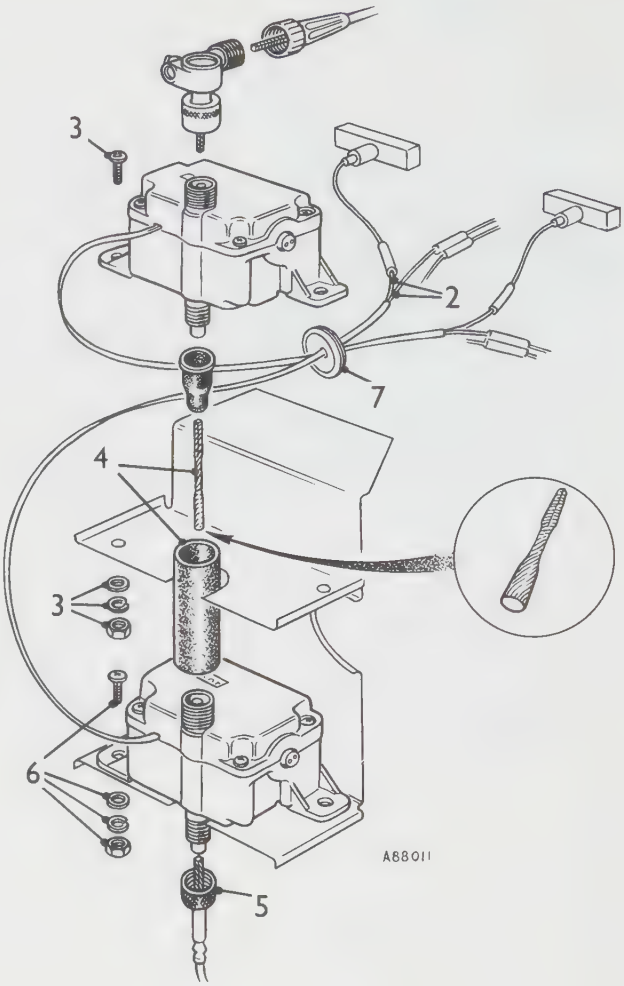

SERVICE TOOLS

Tool No.	Description
47 (S4221A)	Hand Press
18G 2	Two Legged Puller
18G 47BD	Differential Bearing Carrier Remover
18G 47BP	Mainshaft Bearing Remover/Replacer
18G 106	Valve Spring Compressor
18G 134(550)	Differential Bearing and Oil Seal Replacer
18G 134DH	Differential Bearing Replacer Adaptor
18G 191	Pinion Height Gauge
18G 191M	Dummy Pinion
18G 1197	Mainshaft Bearing and Speedo Drive Replacer
18G 1198 (S145C)	Gearbox Mainshaft Circlip Replacer
18G 1198A	Gearbox Mainshaft Circlip Replacer—Adaptor Sleeve
18G 1199 (S144A)	Mainshaft Circlip Remover
18G 1208	Dummy Layshaft
RG 421	Adjustable Flange Holding Wrench
60A	Valve Guide Remover/Replacer
S60A-2A	Valve Guide Remover/Replacer Adaptor
S101	Differential Case Spreader
S101-1	Differential Case Spreader Adaptor
S160	Ball Joint Separator
S300A	Rear Hub Needle Bearing Remover/Replacer
S304	Rear Hub Bearing Replacer
S314	Mainshaft Ball Bearing Replacer
335	Con Rod Aligning Jig
S336-4	Con Rod Arbor Adaptor
S337	Flange Holder
S341	Rack Mounting Compressor
S353	Carburetter Adjusting Tool
S356A (S109)	Rear Hub Remover
S4221A-5A	I.F.S. Coil Spring Remover/Replacer Adaptor
S4221A-7B	Inner Axle Shaft Bearing Remover/Replacer Adaptor
S4221A-14	Rear Hub Bearing Remover Adaptor
S4221A-17	Pinion Head Bearing Remover/Replacer Adaptor
S4235A-2	Constant Pinion Remover Adaptor
3072	Slide Hammer

'J'-TYPE OVERDRIVE TOOLS

L178A	Free Wheel Assembly Ring
L188A	Hydraulic Test Equipment
L188A-2	Pressure Take-off Adaptor
L354A	Oil Pump Plug Spanner
L401A	Relief Valve Body and Dashpot Sleeve Remover/Replacer
L402	Pressure Adaptor Spline Release

All Service Tools mentioned in this Manual must be obtained direct from the manufacturers:
Messrs. V. L. Churchill & Co. Ltd.
P.O. Box No. 3
London Road,
Daventry, Northants

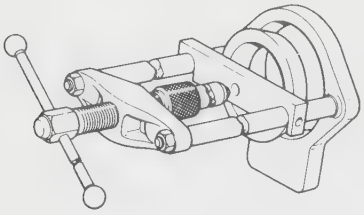

47

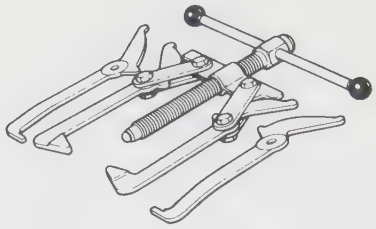

18G.2
(6312A)

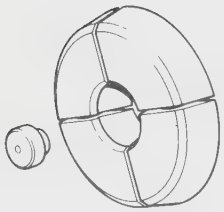

18G.47BD

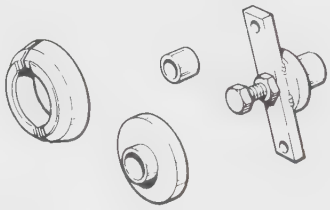

18G.47BP

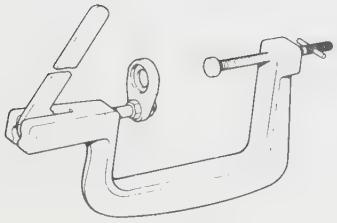

18G.106

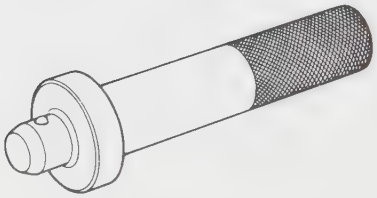

18G.134
(550)

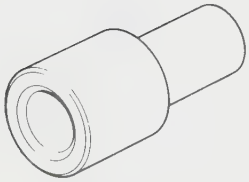

18G.134DH

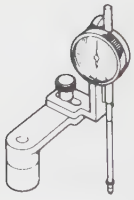

18G.191

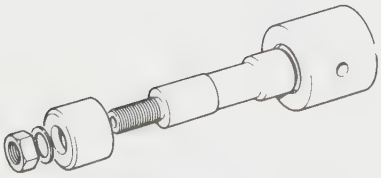

18G.191M

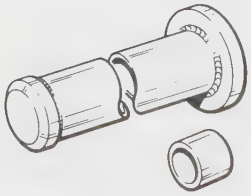

18G.1197

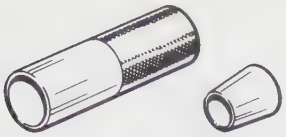

18G.1198

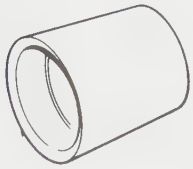

18G.1198A

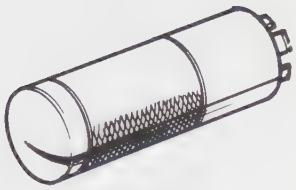

18G.1199
(S.144A)

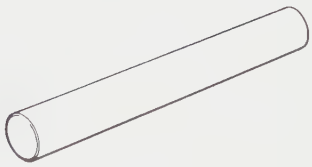

18G.1208

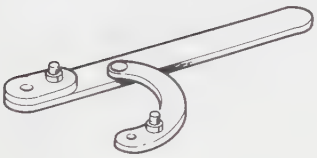

RG.421

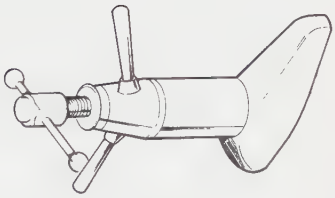

60A

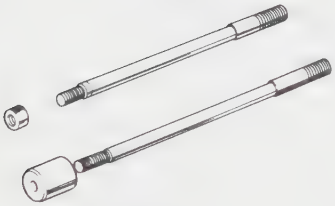

S60A–2A

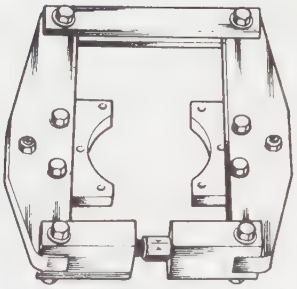

S.101

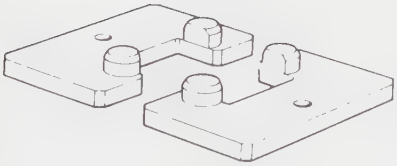

S.101–1

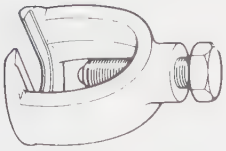

S.160

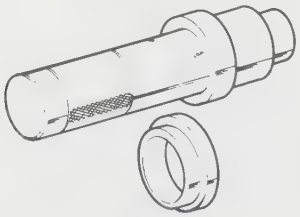

S.300A

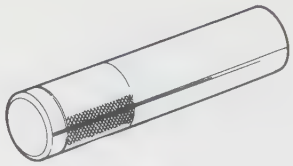

S.304

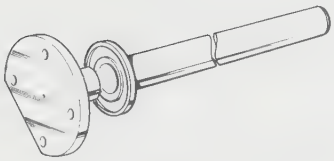

S.314

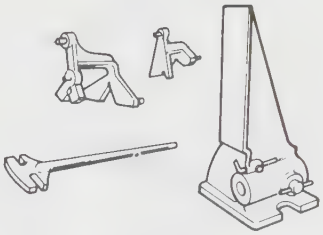

335

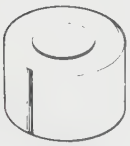

S.336–4

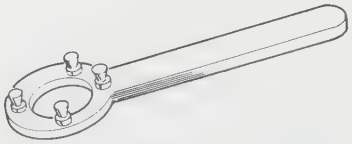

S.337

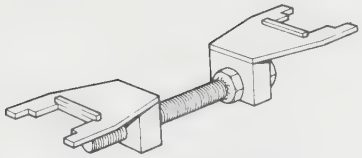

S.341

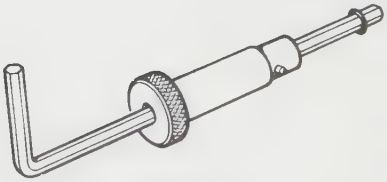

S.353

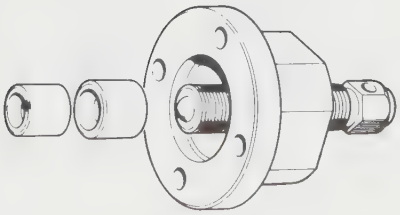

S.356A

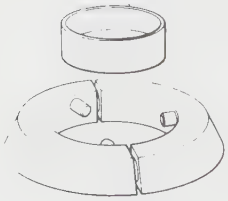

S.4221A–5A

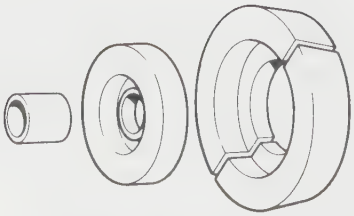

S.4221A–7B

S.4221A–14

S.4221A–17

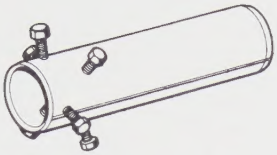

S.4235A–2

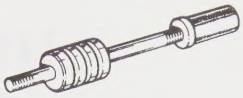

3072

OVERDRIVE TOOLS – 'J' TYPE

L.178A

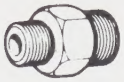

L.188A–2

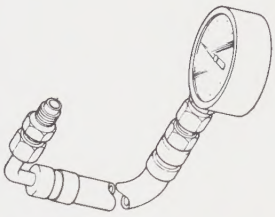

L.188A

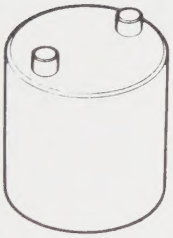

L.354A

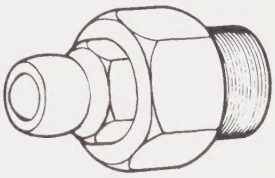

L.402

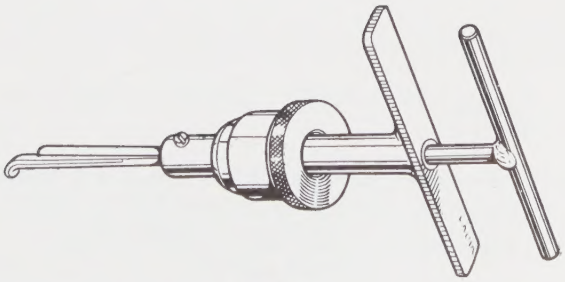

L.401A

EAST ORANGE PUBLIC LIBRARY
The Complete official Triumph Spitfire
629 C7387
3 2665 0020 5162 3
DISCARD

6-78
17.50
629 - C7387 1975-1977 cop.1
The complete official Triumph
Spitfire 1500.

TWO WEEK BOOK

629 - C7387 1975-1977 cop.1

There is a penalty for removing either the book
card or the control card from this pocket.
EAST ORANGE PUBLIC LIBRARY
21 So. Arlington
Branches—Ampere, 89 Ampere Plaza—Franklin, 192 Dodd Street
Elmwood, 317 South Clinton Street
EAST ORANGE, NEW JERSEY

Complete Service Manuals published by Robert Bentley, Inc.

Volkswagen Beetle and Karmann Ghia Official Service Manual Type 1, Model Years 1966-1969. Volkswagen of America, Inc.

Volkswagen Super Beetle, Beetle and Karmann Ghia Official Service Manual Type 1, Model Years 1970-1978. Volkswagen of America, Inc.

Volkswagen Station Wagon/Bus Official Service Manual Type 2, Model Years 1968-1978. Volkswagen of America, Inc.

Volkswagen Fastback and Squareback Official Service Manual Type 3, Model Years 1968-1973. Volkswagen of America, Inc.

Volkswagen Dasher Service Manual, Model Years 1974-1977. Robert Bentley, Inc.

Volkswagen Rabbit/Scirocco Service Manual, Model Years 1975-1977. Robert Bentley, Inc.

Audi Fox Service Manual, Model Years 1973-1977. Robert Bentley, Inc.

Capri Complete Service Manual, Model Years 1970-1975. Robert Bentley, Inc.

Complete Official Triumph TR2 & TR3, 1953-1961 — includes Driver's Instruction Book and Service Instruction Manual. British Leyland Motors

Complete Official Triumph TR4 & TR4A, 1961-1968 — includes Driver's Handbook, Workshop Manual, Competition Preparation Manual. British Leyland Motors

Complete Official Triumph GT6, GT6+ & GT6 Mk III, 1967-1973 — includes Driver's Handbook and Workshop Manual. British Leyland Motors

Complete Official Triumph TR6 & TR250, 1967-1976 — includes Driver's Handbook and Workshop Manual. British Leyland Motors

Complete Official Triumph Spitfire Mk III, Mk IV & 1500, 1968-1974 — includes Driver's Handbook and Workshop Manual. British Leyland Motors

Complete Official Triumph Spitfire 1500, 1975-1977 — includes Driver's Handbook and Workshop Manual. British Leyland Motors

Complete Official Triumph TR7, 1975-1977 — includes Driver's Handbook and Workshop Manual. British Leyland Motors

Complete Official Austin-Healey 100-Six and 3000, 1956-1968. British Leyland Motors

MG Workshop Manual: Complete Tuning and Maintenance for All Models from "M"-Type to TF 1500. W. E. Blower

Complete Official MGB, 1962-1974 — includes Driver's Handbook, Workshop Manual, Special Tuning Manual. British Leyland Motors

Complete Official MGB, 1975-1977 — includes Driver's Handbook and Workshop Manual. British Leyland Motors

Complete Official Jaguar "E" — includes Driver's Handbook, Workshop Manual, Special Tuning Manual. British Leyland Motors

Complete Official 948cc & 1098cc Sprite/Midget — includes Driver's Handbook, Workshop Manual, Special Tuning Manual. British Leyland Motors

Complete Official 1275cc Sprite/Midget, 1967-1974 — includes Driver's Handbook, Workshop Manual, Emission Control Supplement. British Leyland Motors

Complete Official MG Midget 1500, 1975-1977 — includes Driver's Handbook and Workshop Manual. British Leyland Motors

ISBN 0-8376-0124-X
Bentley Stock No. X124