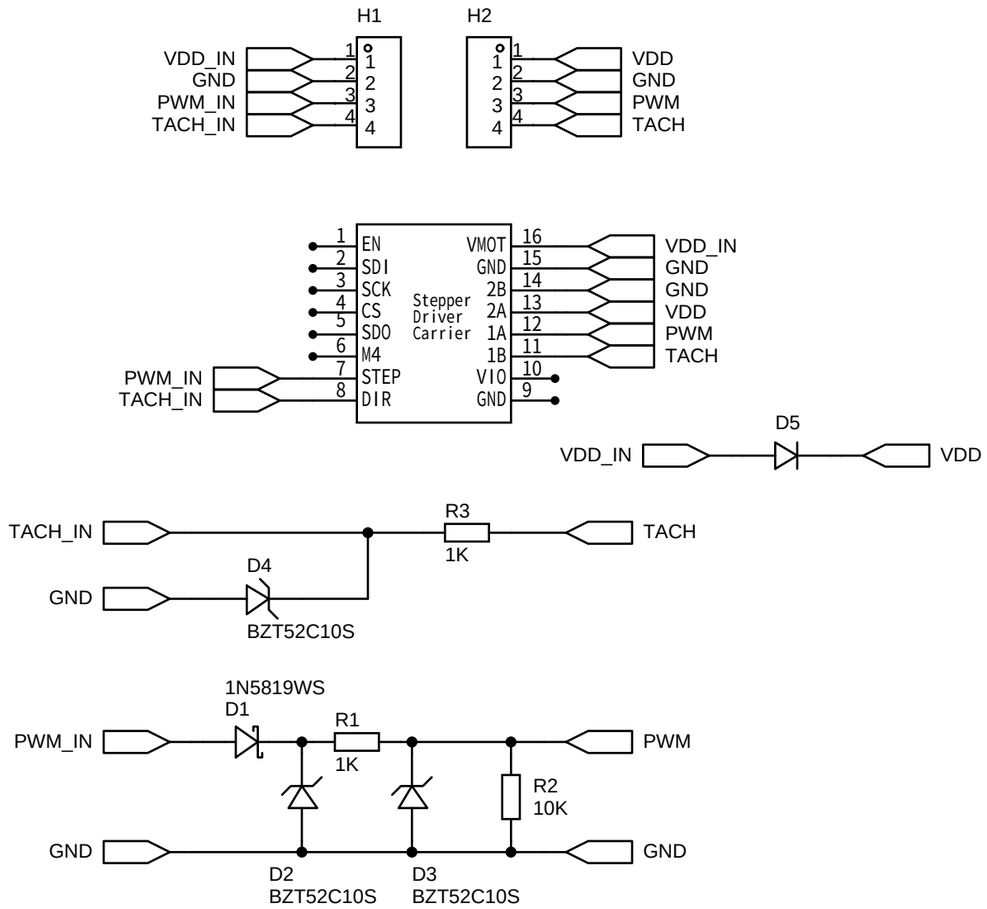

Schematic			2023-03-16	
			2023-03-16	
Page	P1			
Drawed	Ripinteer	polulu_roborock		
Reviewed				
		VER	SIZE	PAGE 1 OF 1
EasyEDA		V1.0	A4	