IR sensor

An Infrared light-emitting diode (IR LED) is a special-purpose LED that emits infrared rays ranging from 700 nm to 1 mm wavelength. Different IR LEDs may produce infrared light of differing wavelengths, just like other LEDs produce light of different colors.

IR sensor is a device that uses infrared technology to detect objects or changes in the environment. IR sensors can detect a wide range of physical properties such as temperature, motion, and proximity.

IR LEDs are usually made of gallium arsenide or aluminum gallium arsenide. In complement with IR receivers, these are commonly used as sensors.

The appearance of an IR LED is the same as a common LED. Since the human eye cannot see infrared radiation, it is not possible for a person to identify if an IR LED is working. A camera on a cell phone camera solves this problem. The IR rays from the IR LED in the circuit are shown in the camera.

Pin Diagram of IR LED

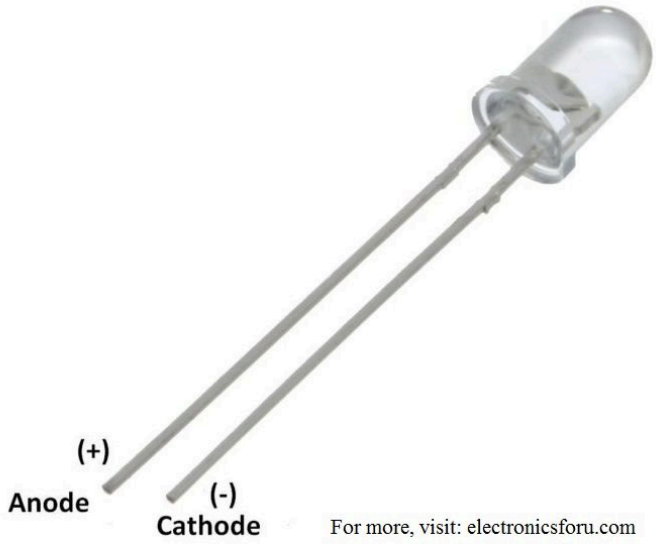

An IR LED is a type of diode or simple semiconductor. Electric current is allowed to flow in only one direction in diodes. As the current flows, electrons fall from one part of the diode into holes on another part.

In order to fall into these holes, the electrons must shed energy in the form of photons, which produce light.

It is necessary to modulate the emission from the IR diode to use it in the electronic application to prevent spurious triggering. Modulation makes the signal from IR LED stand out above the noise.

Infrared diodes have a package that is opaque to visible light but transparent to infrared. The massive use of IR LEDs in remote controls and safety alarm systems has drastically reduced the pricing of IR diodes in the market.

IR Sensor

An IR sensor is an electronic device that detects IR radiation falling on it. Proximity sensors (used in touchscreen phones and edge-avoiding robots), contrast sensors (used in line following robots), and obstruction counters/sensors (used for counting goods and in burglar alarms) are some applications involving IR sensors.

IR Sensor Working Principle

An IR sensor consists of two parts, the emitter circuit, and the receiver circuit. This is collectively known as a photo-coupler or an optocoupler.

The emitter is an IR LED and the detector is an IR photodiode. The IR photodiode is sensitive to the IR light emitted by an IR LED. The photodiode's resistance and output voltage change in proportion to the IR light received. This is the underlying working principle of the IR sensor.

The type of incidence can be direct incidence or indirect incidence. In direct incidence, the IR LED is placed in front of a photodiode with no obstacle.

In indirect incidence, both the diodes are placed side by side with an opaque object in front of the sensor. The light from the IR LED hits the opaque surface and reflects back to the photodiode.

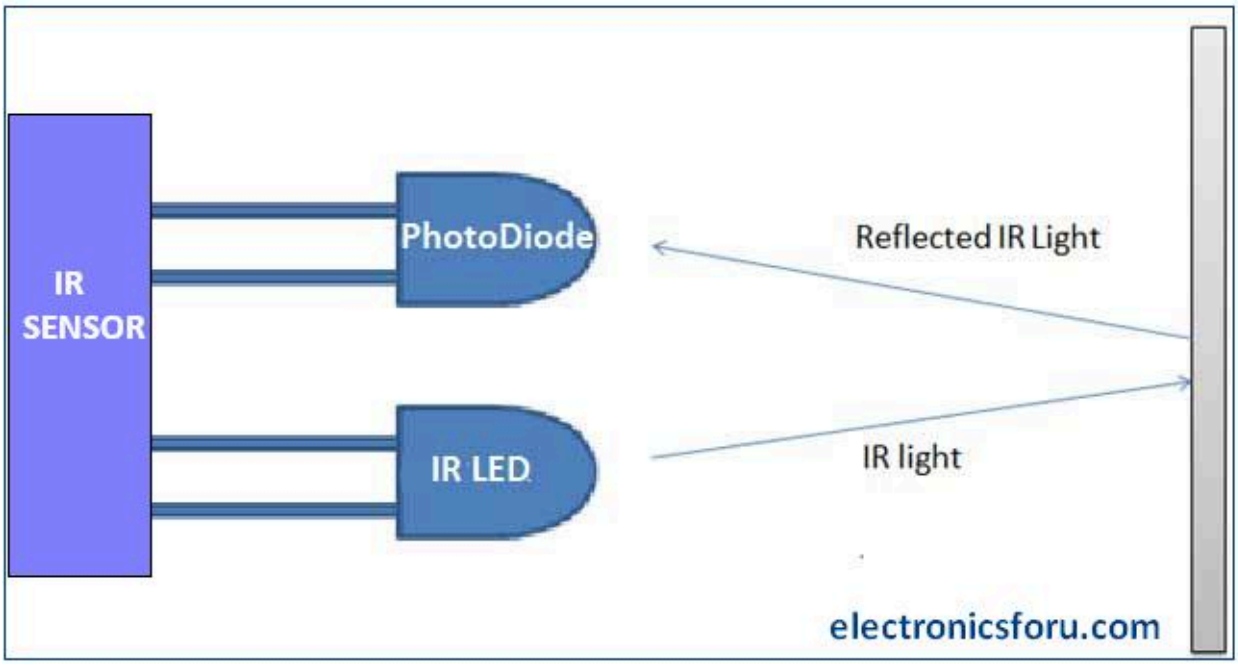

IR Receiver LED and IR Transmitter LED

An IR receiver LED and an IR transmitter LED are both types of light-emitting diodes (LEDs) that are used in infrared (IR) communication.

An IR receiver LED is a device that detects infrared signals from remote controls and other IR sources. It is typically a small, clear, or translucent device that is sensitive to IR light in a specific frequency range.

When an IR signal is detected, the IR receiver LED will emit a small amount of visible light, which can be used to confirm that a signal has been received.

An IR transmitter LED, on the other hand, is a device that emits infrared light in order to send signals to other devices. It is typically a small, clear, or translucent device that emits IR light in a specific frequency range. IR transmitter LEDs are commonly used in remote controls and other IR signaling devices.

In summary, the IR receiver LED detects the IR signal from the remote, and the IR transmitter LED emits the IR signal from the remote.

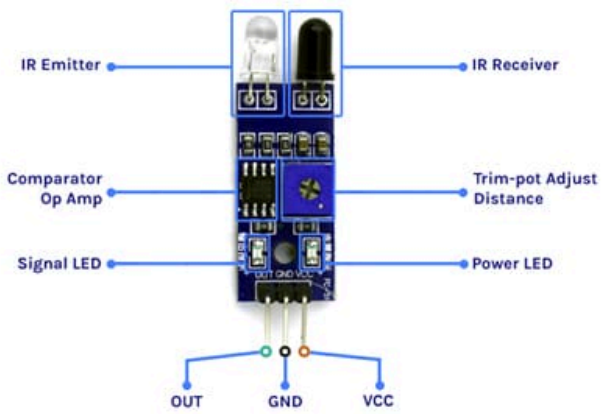

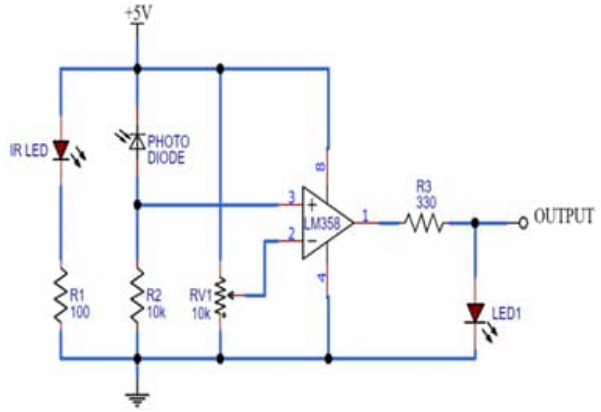

An IR sensor module is a device that contains an IR receiver LED and other components that are used to detect and process IR signals. It typically includes an IR receiver LED, a signal amplifier, and a demodulator circuit.

The IR receiver LED is used to detect IR signals, while the signal amplifier and demodulator circuit are used to amplify and process the received signal, respectively.

IR sensor modules are widely used in various electronic applications such as remote control, motion detection, proximity sensing, and more. They are commonly used in consumer electronics, robotics, and automation systems.

IR sensor modules come in various forms such as simple IR receiver modules and complex IR sensor modules with additional features such as signal processing and signal filtering. Some IR sensor modules also provide an output in a digital format that can be read by a microcontroller or microprocessor.

IR sensors find a wide variety of applications in various fields. Let's take a look at a few of them.

IR Sensor Types

There are several types of IR sensors, each with different characteristics and applications. Some common types include:

1. Passive Infrared (PIR) Sensor: PIR sensors are used to detect motion by sensing changes in infrared radiation. They are commonly used in security systems, lighting control, and automatic doors.

2. Reflective IR Sensor: Reflective IR sensors use infrared LED to emit infrared light and a phototransistor to detect the reflected light from an object. They are used to measure distance and detect proximity.
3. Transmissive IR Sensor: Transmissive IR sensors use infrared LED to emit infrared light and a phototransistor to detect the light that passes through an object. They are used to measure distance and detect proximity.
4. IR proximity Sensor: IR proximity sensors are used to detect the presence of an object without making physical contact. They are commonly used in mobile devices, robotics, and automation systems.
5. IR temperature Sensor: These can measure the temperature of an object by detecting the infrared radiation emitted by it. They are used in industrial, HVAC, and medical applications.
6. IR spectroscopy Sensor: These can use infrared radiation to analyze the properties of a substance. They are used in chemical analysis, medical diagnosis, and environmental monitoring.
7. IR Imaging sensor: These sensors use infrared radiation to create images, they are used in thermal imaging, night vision, and surveillance cameras.

Technical data of TSSP940

PARTS TABLE		
Carrier frequency	38 kHz	TSSP94038
	56 kHz	TSSP94056
Package		Mold
Pinning		1 = OUT, 2 = GND, 3 = V_S
Dimensions (mm)		6.0 W x 6.95 H x 5.6 D
Mounting		Leaded
Application		Presence sensors, fast proximity sensors
Special options		• Narrow optical filter: www.vishay.com/doc?81590 • Wide optical filter: www.vishay.com/doc?82726

ABSOLUTE MAXIMUM RATINGS				
PARAMETER	**TEST CONDITION**	**SYMBOL**	**VALUE**	**UNIT**
Supply voltage (pin 3)		V_S	-0.3 to +3.6	V
Supply current (pin 3)		I_S	5	mA
Output voltage (pin 1)		V_O	-0.3 to +3.6	V
Voltage at output to supply		$V_S - V_O$	-0.3 to (V_S + 0.3)	V
Output current (pin 1)		I_O	5	mA
Junction temperature		T_j	100	°C
Storage temperature range		T_{stg}	-25 to +85	°C
Operating temperature range		T_{amb}	-25 to +85	°C
Power consumption	$T_{amb} \leq 85$ °C	P_{tot}	10	mW

ELECTRICAL AND OPTICAL CHARACTERISTICS (T_{amb} = 25 °C, unless otherwise specified)							
PARAMETER	TEST CONDITION	PART [1]	SYMBOL	MIN.	TYP.	MAX.	UNIT
Supply current (pin 3)	E_v = 0, V_S = 3.3 V		I_{SD}	0.25	0.37	0.45	mA
	E_v = 40 klx, sunlight		I_{SH}	-	0.5	-	mA
Supply voltage			V_S	2.0	-	3.6	V
Transmission distance	E_v = 0, IR diode TSAL6200, I_F = 50 mA, test signal see Fig. 1		d	-	12	-	m
Output voltage low (pin 1)	I_{OSL} = 0.5 mA, E_e = 2 mW/m², test signal see Fig. 1		V_{OSL}	-	-	100	mV
Minimum irradiance	Pulse width tolerance: $t_{pi} - 5/f_0 < t_{po} < t_{pi} + 6/f_0$, test signal see Fig. 1	TSSP940xxZ3	$E_{e\ min.}$	-	0.1	0.2	mW/m²
		TSSP940xx		0.32	0.4	0.5	
Maximum irradiance	$t_{pi} - 5/f_0 < t_{po} < t_{pi} + 6/f_0$, test signal see Fig. 1		$E_{e\ max.}$	30	-	-	W/m²
Directivity	Angle of half transmission distance		$\varphi_{1/2}$	-	± 45	-	°

References:

https://www.vishay.com/docs/82843/tssp940.pdf

https://www.electronicsforu.com/technology-trends/learn-electronics/ir-led-infrared-sensor-basics

GPS Sensor

★ What is a GPS sensor ?

GPS stands for Global Positioning System. The system contains satellites and ground based control installations. GPS sensor consists of surface mount chip which processes signals from GPS satellites using a small rectangular antenna, often mounted on the top of the GPS chip.

• GPS module is usually small board on which GPS sensor is mounted with additional components.

• GPS receiver is a device which includes data display and other components such as memory for data storage in addition to GPS module.

★ Working of a gps sensor

GPS receiver uses a constellation of satellites and ground stations to calculate accurate location wherever it is located.

These GPS satellites transmit information signal over radio frequency (1.1 to 1.5 GHz) to the receiver. With the help of this received information, a ground station or GPS module can compute its position and time.To determine distance, both the satellite and GPS receiver generate the same pseudocode signal at the same time. The satellite transmits the pseudocode; which is received by the GPS receiver. These two signals are compared and the difference between the signals is the travel time.

NEO-M8N GPS Module

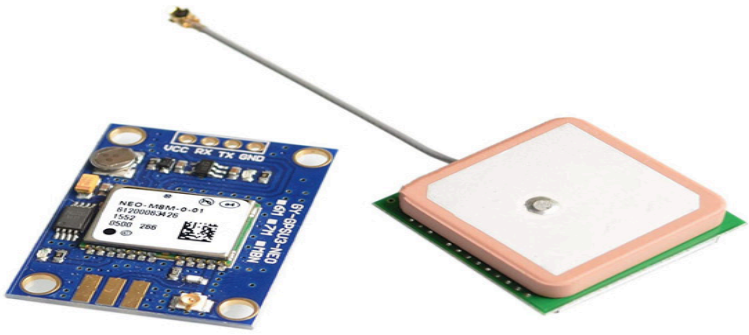

Pin Description

VCC: Power Supply 3.3 – 6 V

GND: Ground

TX: Transmit data serially which gives information about location, time etc.**RX:** Receive Data serially. It is required when we want to configure a GPS module.

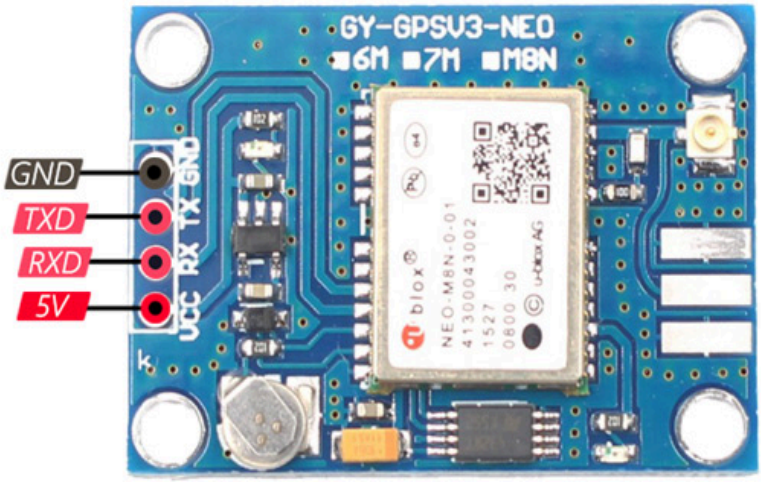

Features of NEO-M8N

The NEO-M8N module is a high-performance GNSS receiver designed by u-blox. Here are some key features:

1. **Multi-GNSS Support**: Supports GPS, GLONASS, Galileo, and BeiDou systems for improved accuracy and coverage.
2. **Concurrent GNSS Reception**: Capable of receiving and processing multiple GNSS signals simultaneously.
3. **High Sensitivity**: Offers superior acquisition and tracking sensitivity, allowing operation in challenging environments.
4. **Fast Time to First Fix (TTFF)**: Rapid startup and reacquisition times.
5. **Dynamic Model**: Supports different dynamic modes (e.g., pedestrian, automotive) for optimal performance.
6. **Accuracy**: Provides position accuracy within 2.5 meters.
7. **Power Consumption**: Low power consumption, suitable for battery-operated applications.
8. **Interfaces**: Supports UART, SPI, I2C, and USB interfaces for versatile connectivity.
9. **Update Rate**: Up to 10 Hz position update rate for real-time applications.
10. **AssistNow**: Supports u-blox AssistNow online and offline A-GPS services for faster positioning.

Specification of the Module

Parameter	Symbol	Condition	Min	Max	Units
Power supply voltage	VCC		–0.5	3.6	V
Backup battery voltage	V_BCKP		–0.5	3.6	V
USB supply voltage	VDD_USB		–0.5	3.6	V
Input pin voltage	V_{IN}	If VCC < 3.1 V If VCC > 3.1 V	–0.5 -0.5	VCC+0.5 3.6	V V
	V_{IN_USB}		–0.5	VDD_USB	V
DC current through any digital I/O pin (except supplies)	I_{PIN}			10	mA
VCC_RF output current	ICC_RF			100	mA
Input power at RF_IN	P_{RFIN}	source impedance = 50 Ω, continuous wave		15	dBm
Storage temperature	T_{STG}		–40	85	°C

Interfacing NEO-M8N (GPS Module) with Arduino Uno

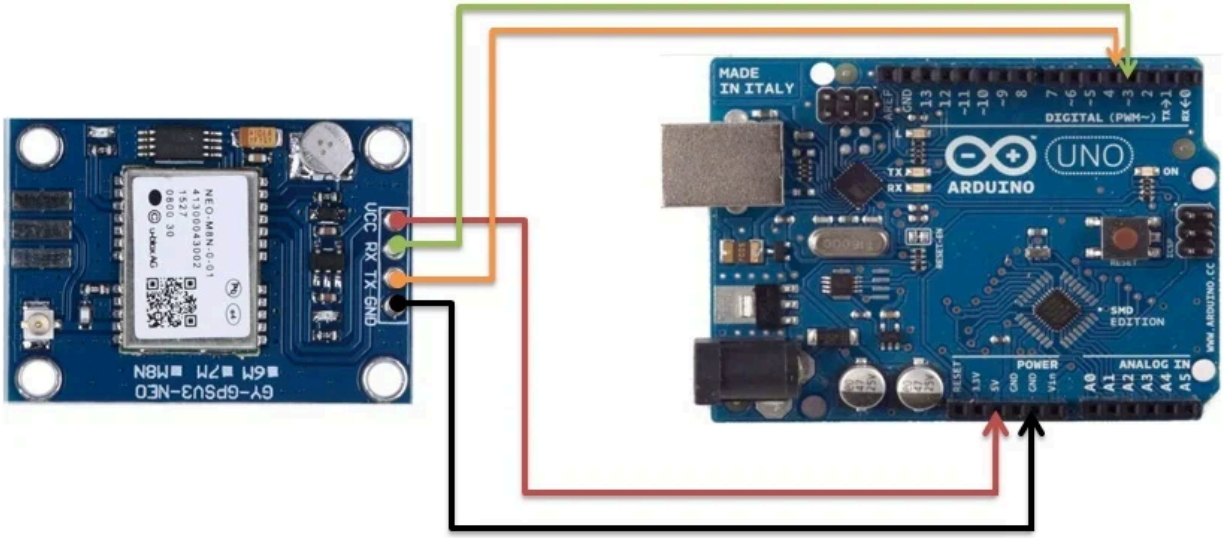

1. Connect the Vcc of the GPS module to Power Supply Pin (5V) of Arduino Uno.
2. Connect Rx (Receiver Pin) of GPS module to D3 Pin of Uno.
3. Connect the Tx (Transmitter Pin) of the GPS module to D4 Pin of Uno.
4. Connect GND (Ground Pin) of the GPS module to the GND of Uno.

CODE

Install the TinyGPS Library for Arduino and save it in your libraries folder of arduino ide in your file explorer .

Open the example code in Arduino Software (IDE). Under the File tab, hover the cursor over **Examples**, select **TinyGPSPlus-master**, and then click on **DeviceExample**.

OUTPUT

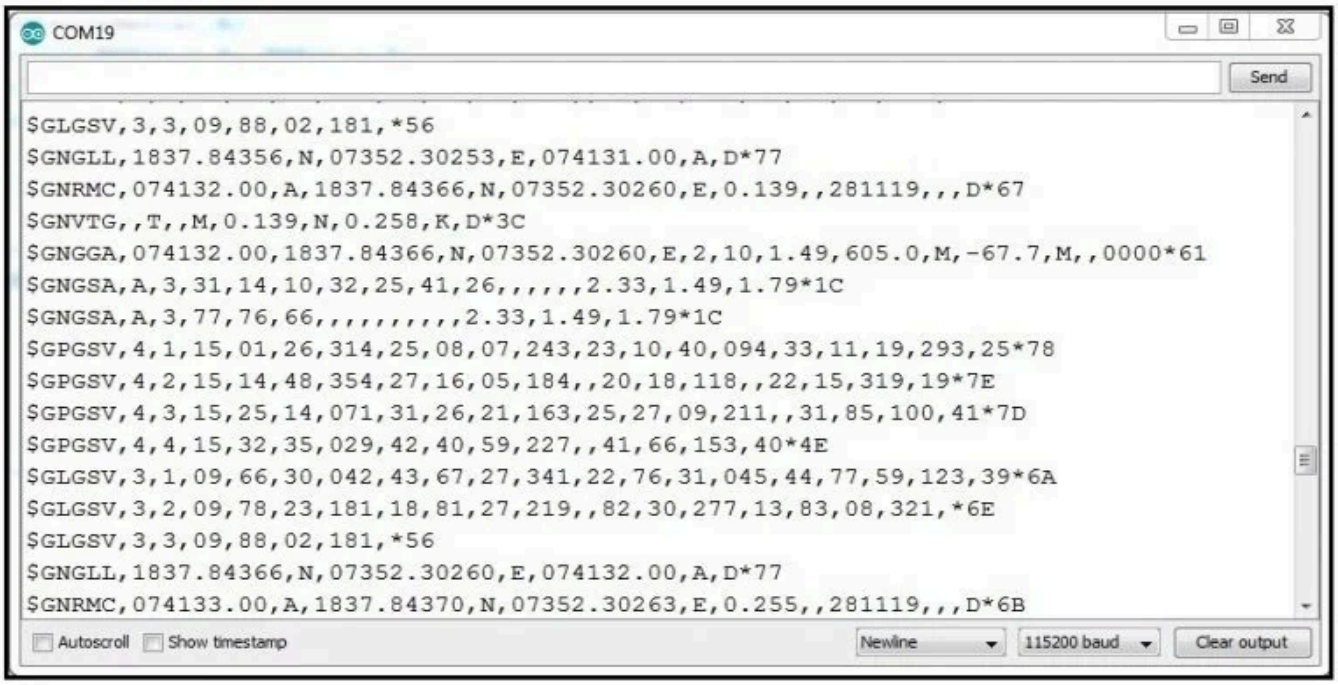

The **GN** after **$** indicates GPS position. **GGA** is for Global Positioning System Fix Data. The characters before the first comma indicate the type of message.

Pressure Sensor

Introduction:

A pressure sensor is a transducer or instrument that converts an input mechanical pressure in gasses or liquids into an electrical output signal. A pressure transducer consists of a pressure-sensitive element that can measure, detect or monitor the pressure being applied and electronic components to convert the information into an electrical output signal.Pressure is defined as the amount of force (exerted by a liquid or gas) applied to a unit of “area” (P=F/A), and the common units of pressure are Pascal (Pa), Bar (bar), N/mm2 or psi (pounds per square inch). Pressure sensors often utilize piezoresistive technology, as the piezoresistive element changes its electrical resistance proportional to the strain (pressure) experienced.

Working:

An industrial pressure sensor works on the piezoresistive effect using strain gauges. Strain gauges, electrical conductors attached to a film in a zigzag shape, change resistance when stretched or compressed. This change in resistance is measured to determine the applied force.The sensor consists of a metal body (flexure) with strain gauges bonded to it. When pressure is applied, the diaphragm deforms, altering the resistance in the strain gauges. This change is measured as an electrical signal proportional to the pressure.The strain gauges are configured in a Wheatstone Bridge circuit, which enhances signal measurement. Some sensors have built-in amplifiers to convert the low-strength millivolt signal into a more useful form, like varying voltage (±10V) or current (4-20 mA). Signal conditioners may also regulate excitation voltage, filter noise, amplify signals, and convert output signals for compatibility with other system components.

Types:

Gauge Pressure: Measures pressure relative to ambient atmospheric pressure, useful for applications like liquid level measurement in vented tanks.

Absolute Pressure: Measures pressure relative to a perfect vacuum (zero), ideal for applications like altitude determination and tyre pressure monitoring.

Differential Pressure: Measures the difference between two specific points in a system, commonly used in HVAC applications to monitor airflow.

This report specifically focuses on the BMP-280 sensor, which utilizes the piezoresistive effect and strain gauge technology to measure pressure accurately. The BMP-280 sensor's design involves a diaphragm and strain gauges arranged in a Wheatstone Bridge configuration to convert pressure changes into precise electrical signals. This ensures reliable pressure measurements suitable for various applications.

BMP-280:

The Bosch BMP280 is a high-precision, low-power digital barometer for measuring temperature (-40°C to +85°C) and pressure (300-1100 hPa), allowing for altitude approximation. It connects via I2C or SPI and includes a user-friendly library. Compared to the BMP180, it offers lower power consumption, reduced noise, higher resolution, more measurement modes, and an environmental interference filter.

Features:

- Digital two wire (I2C) interface
- Wide barometric pressure range
- Flexible supply voltage range
- Ultra-low power consumption
- Low noise measurement
- Fully calibrated
- Temperature measurement included

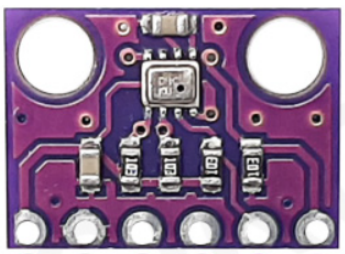

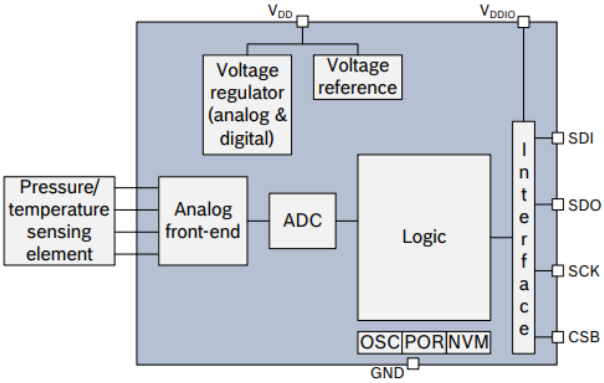

Figure 1: Block diagram of BMP280

Pin Configuration:

PIN NAME	DESCRIPTION
VCC	3.3V supply pin.
GND	Ground.
SCL	Serial Clock Pin for I2C and SPI communication.
SDA	Serial Data Pin for I2C and SPI communication.
CSB	Chip Select. Also used for SPI communication.
SDO	Used to set device address and for SPI communication.

Table: BMP280 Pinout Description

Arduino UNO Interface with BMP-280

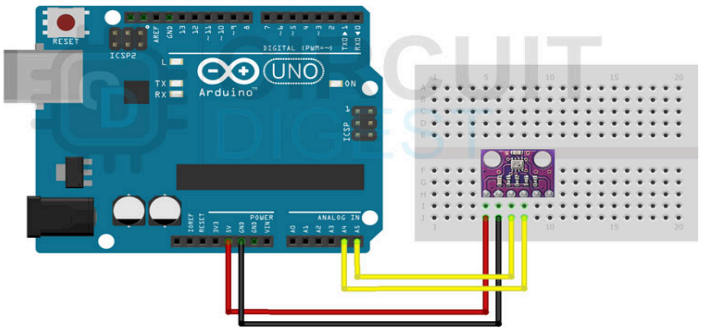

Pin Connections with Arduino UNO

BMP280	ARDUINO UNO
Vin	3.3V
GND	GND
SCL	A5
SDA	A4

Library Inclusions and Initializations

To begin, we need to include the appropriate libraries for I2C communication and the BMP280 sensor. The necessary libraries are Wire.h, SPI.h, and Adafruit_BMP280.h. Additionally, we define the I2C address of the BMP280 sensor and create an instance of the sensor. Below is the code snippet that accomplishes this:

```
#include <Wire.h>

#include <SPI.h>

#include <Adafruit_BMP280.h>

#define BMP280_ADDRESS 0x76

Adafruit_BMP280 bmp; // I2C
```

ULTRA-SONIC SENSOR (HC-SR04):

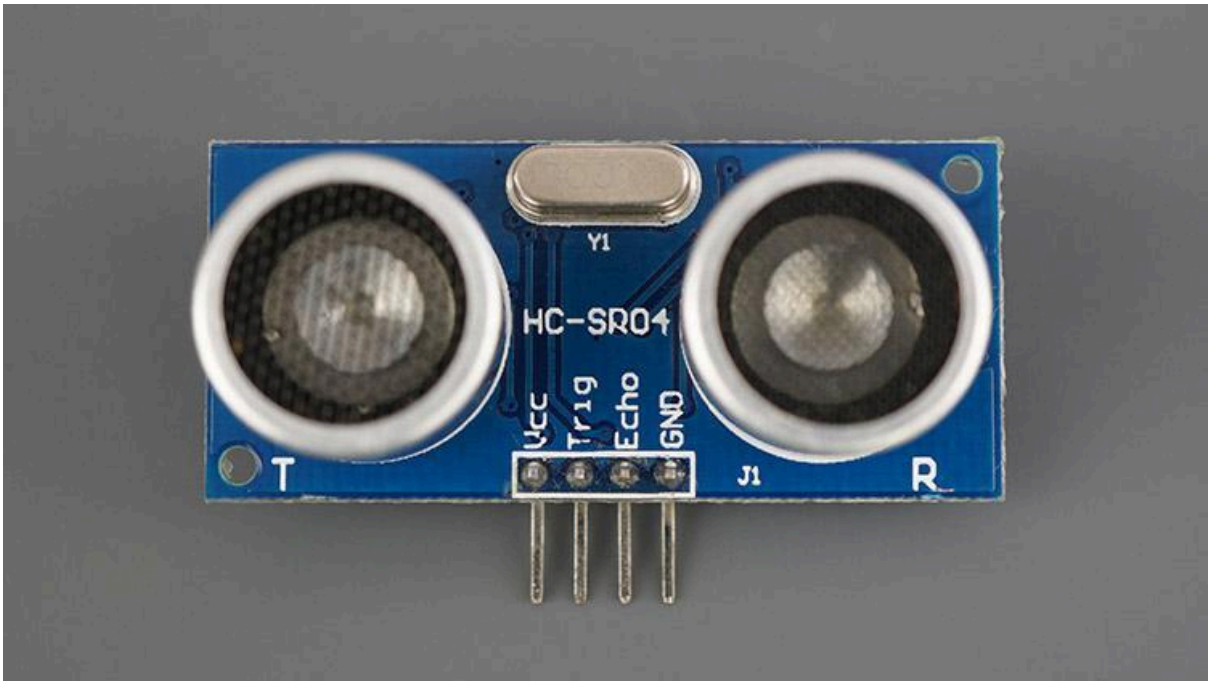

Specifications of HC-SR04:

- **Power Supply**: 5V DC
- **Quiescent Current**: < 2mA
- **Working Current**: 15mA
- **Frequency**: 40kHz
- **Max Range**: 4 meters
- **Min Range**: 2 centimeters
- **Ranging Accuracy**: ±3mm
- **Measuring Angle**: 15 degrees
- **Trigger Input Pulse width**: 10µs
- **Dimension**: 45mm x 20mm x 15mm

PIN CONFIGURATIONS :

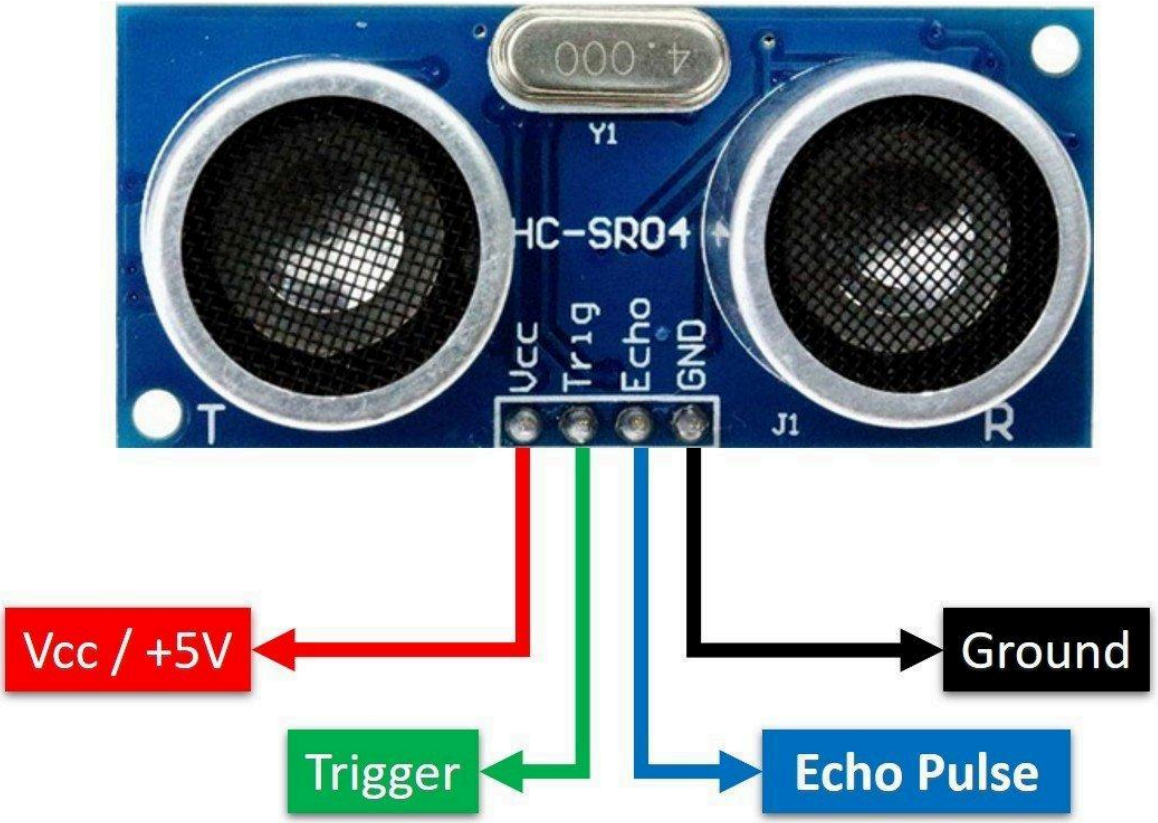

- **VCC**: 5V DC power supply
- **Trig**: Trigger input (a 10µs high pulse required to trigger the sensor)
- **Echo**: Echo output (pulse width proportional to the distance to the target)
- **GND**: Ground

WORKING PRINCIPLE:

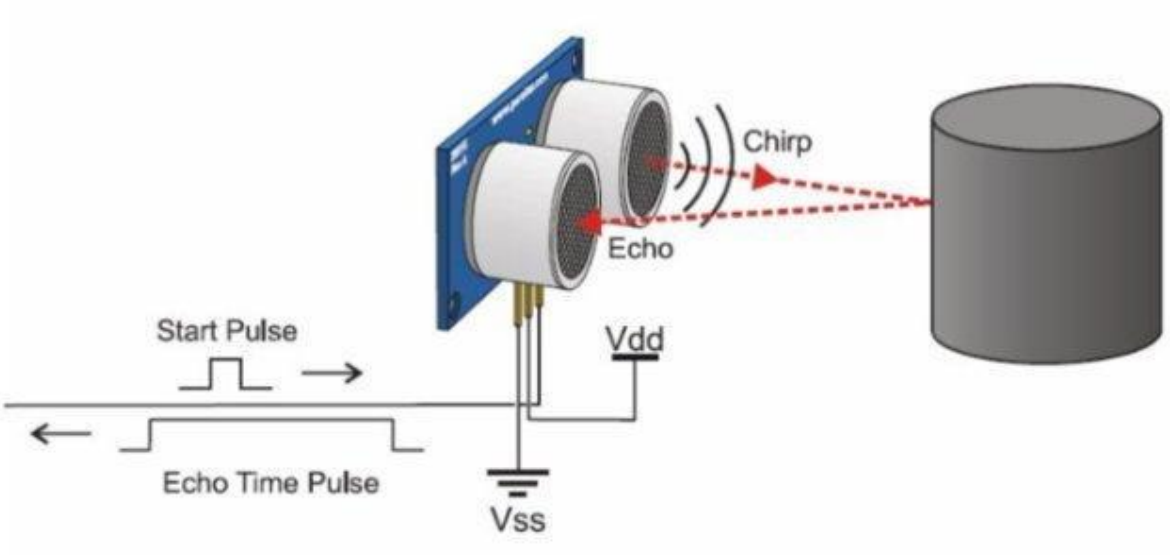

1. The sensor emits a 40kHz ultrasonic pulse when the Trigger pin is set high for at least 10 microseconds.
2. This pulse travels through the air and bounces back when it hits an obstacle.
3. The Echo pin outputs a high pulse, the duration of which is the time taken for the pulse to travel to the object and back.
4. The distance to the object can be calculated using the formula:

Distance =($\frac{TIme \times Speed}{2}$)

Where the speed of sound is approximately 343 meters per second.

APPLICATIONS:

- Obstacle avoidance in robots
- Distance measurement
- Level detection
- Object detection

INTERFACING WITH VARIOUS MICROCONTROLLERS

ARDUINO :

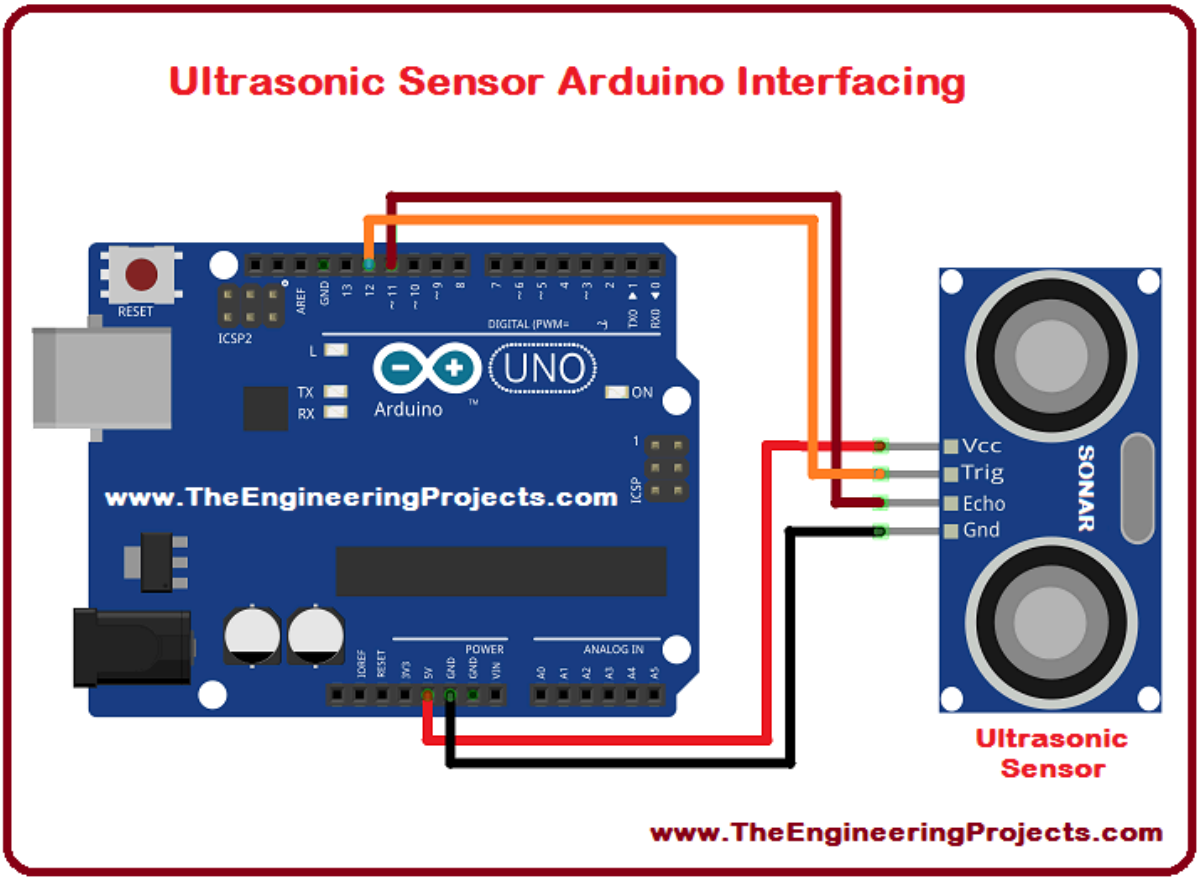

INTERFACING WITH RASPBERRY PICO:

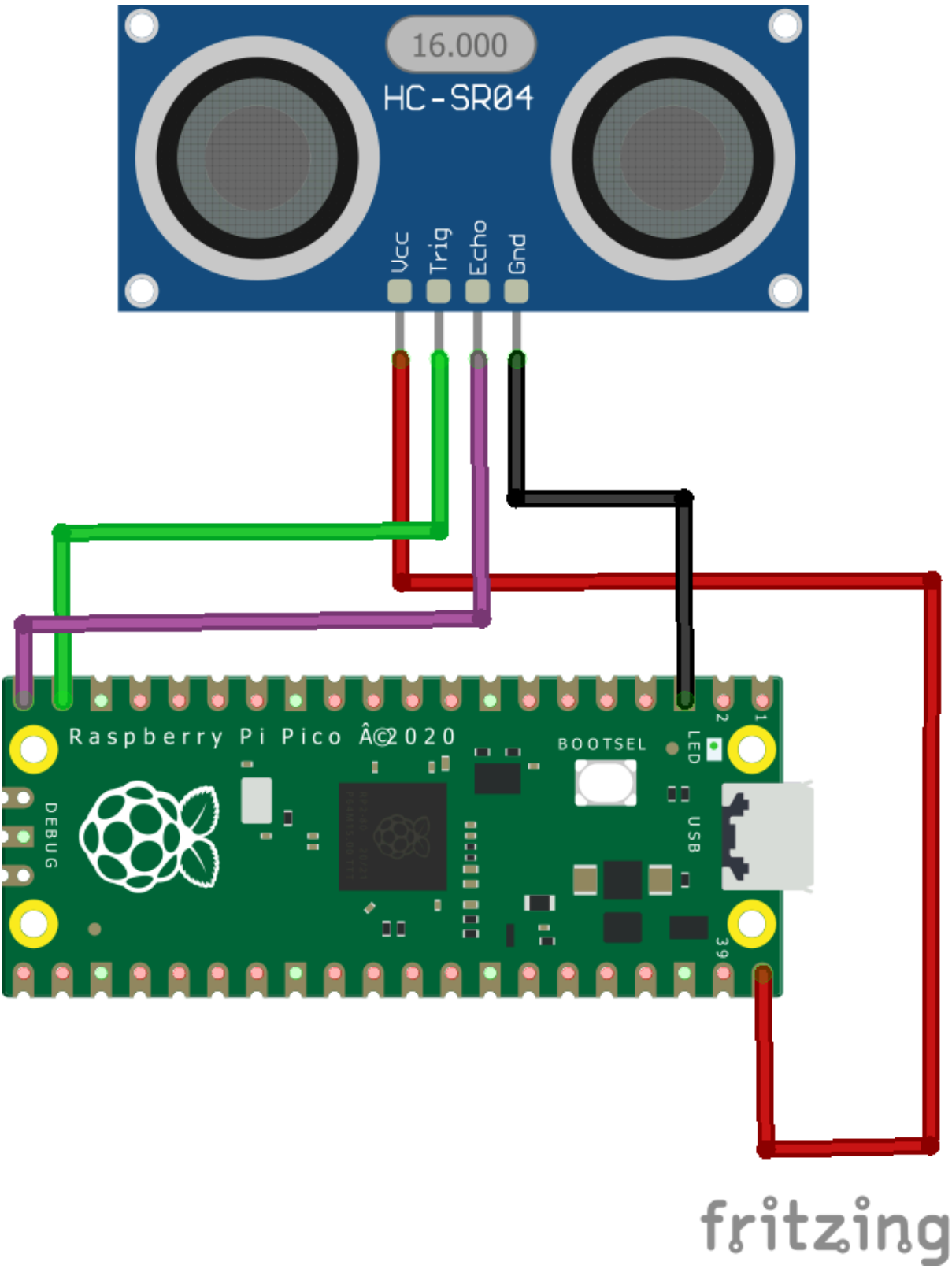
16.000
HC-SR04
Vcc
Trig
Echo
Gnd
Raspberry Pi Pico Â©2020
BOOTSEL
LED
USB
DEBUG
1
2
39
fritzing