I2C Protocol

UART

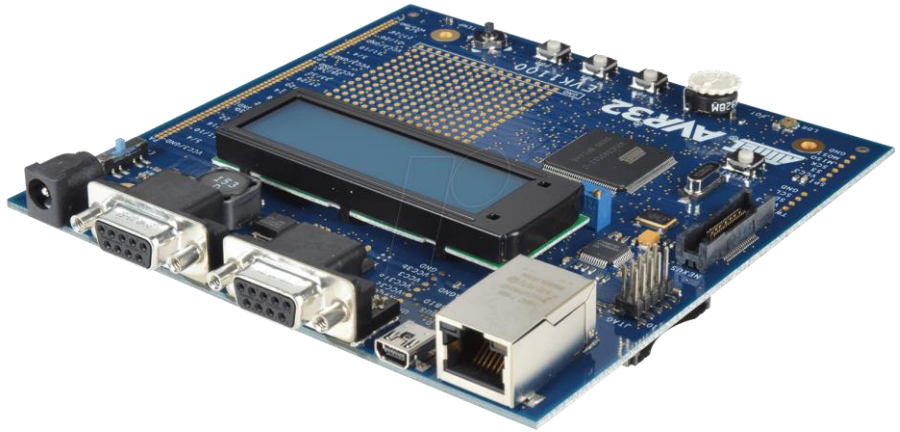

Disadvantages.

- Speed
- No Network based on more than two devices.
- Limited Number of UART ports.

I2C Protocol

- NXP (now part of Philips) is the inventor and
  World leader of I2C or Inter-Integrated Circuit Technology.

- I2C is now a days used in electronics devices based on Microcontroller or Microprocessors. Because It is very simple to integrate in most complex design.

I2c Protocol

- This bus enable the Designer to change the existing design without having to change the Microcontroller by using the bidirectional Lines.
  - **SDA** Serial Data
  - **SCL** Serial Clock Line.

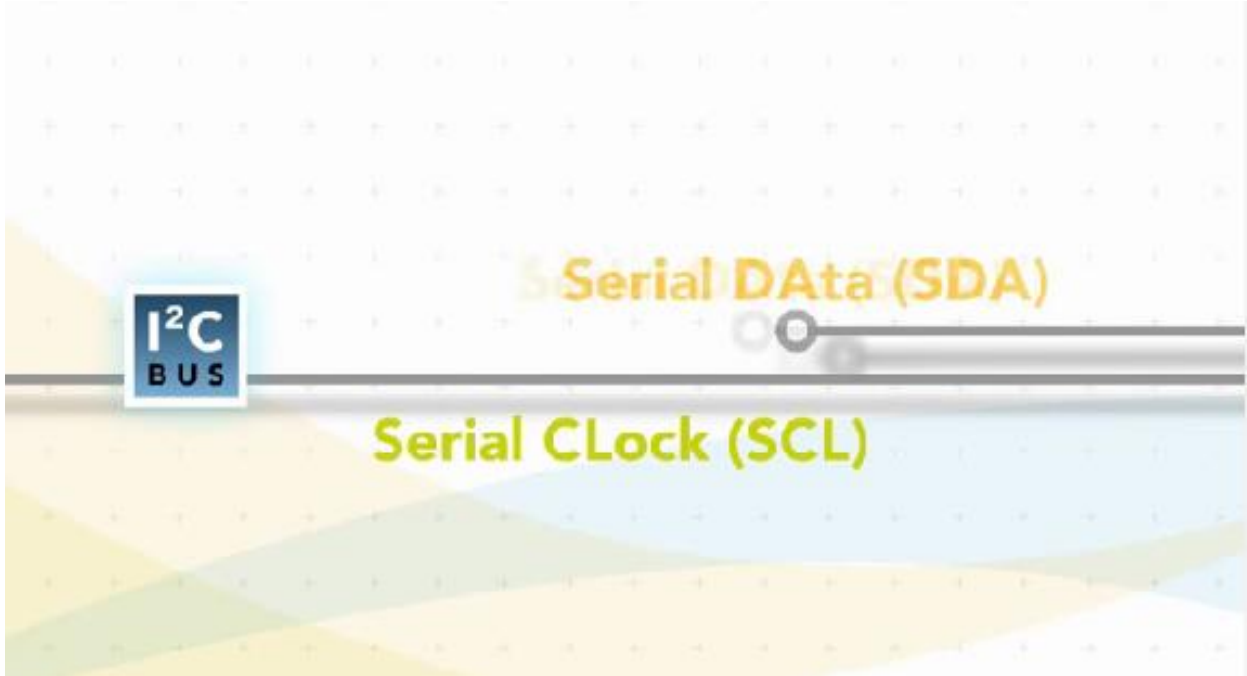

I2c Protocol

- I2C technology is specially useful in application where weight and space are serious issues. like :
  - Cell Phones
  - Laptops.

I2c Protocol

- Additionally I2c able the deisgners to add more GPIOs to Microcontrollers providing greater verstaility as components may be introduced on different locations on the board as more features and process added to the applications.

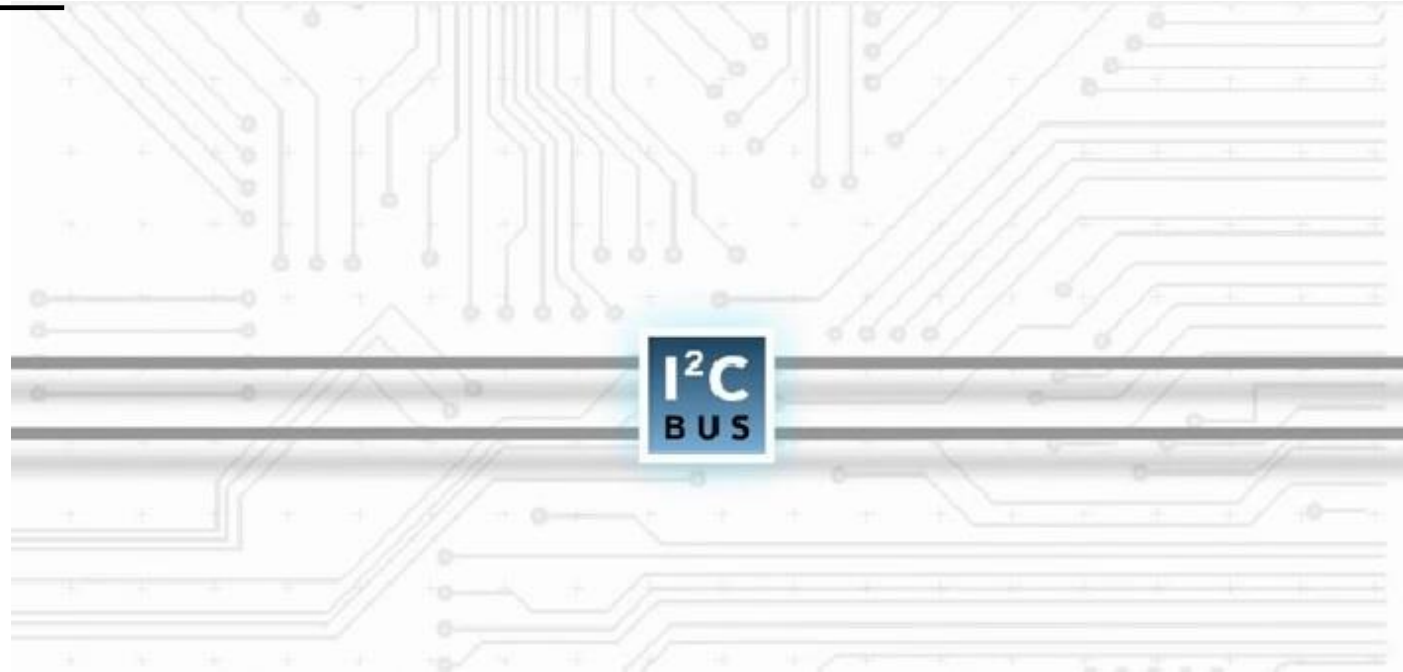

I2c Protocol

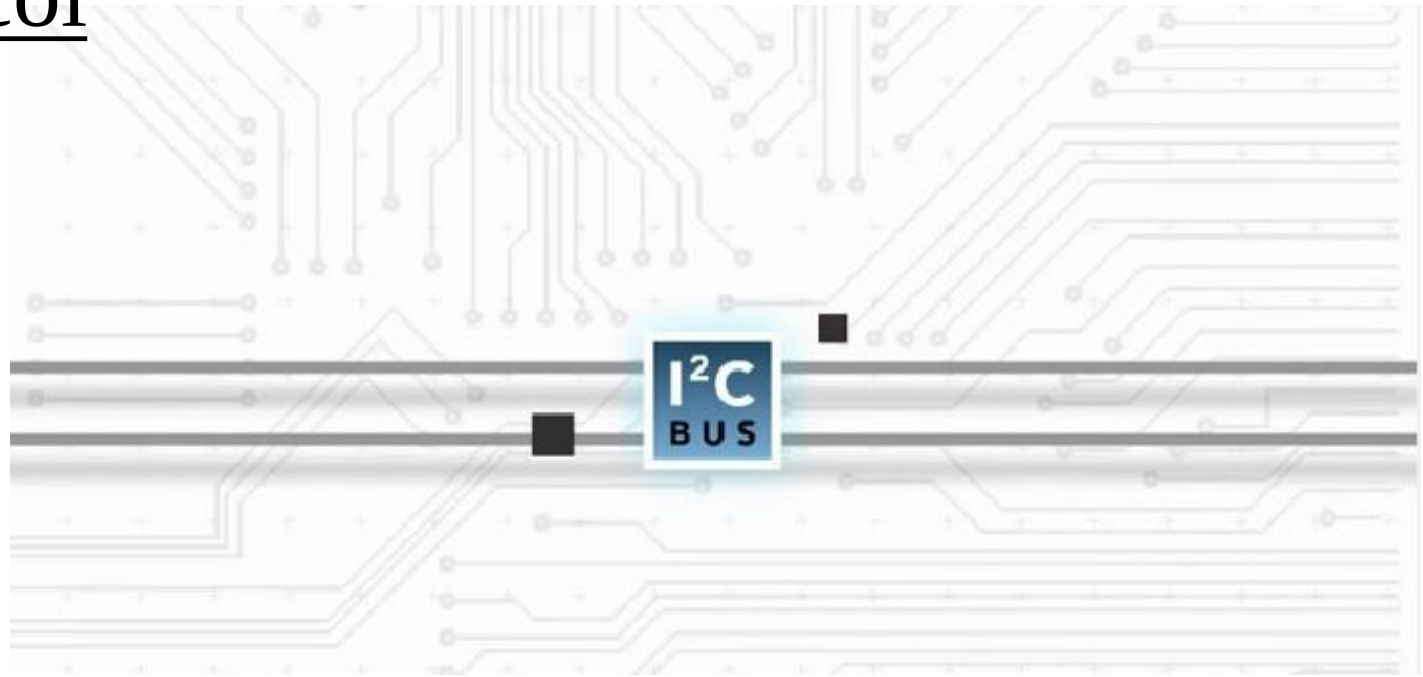

- Limited GPIOs are becoming increasingly valuable.
- Deigner can shorten time to market the product by using I2c Bus to avoid redesingning when the existing GPIOS are already used upto the bottleneck.

I2c Protocol

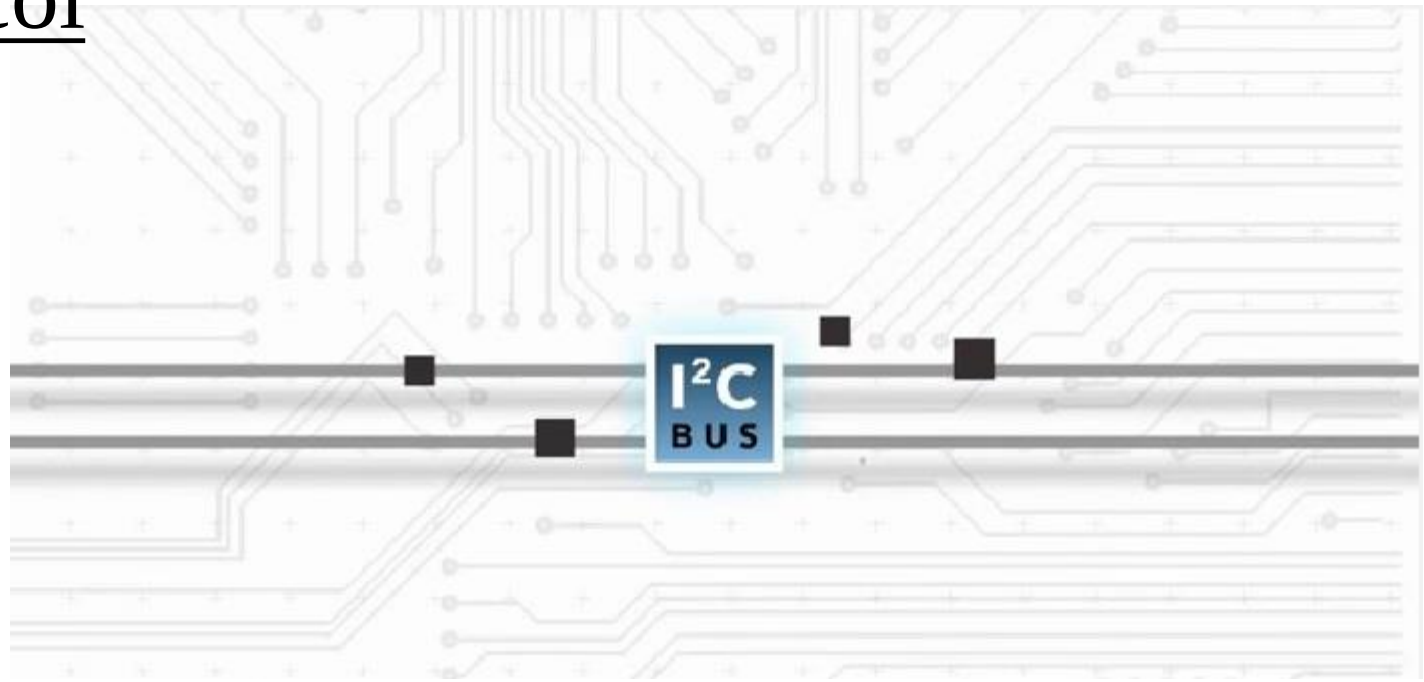

I2c Protocol

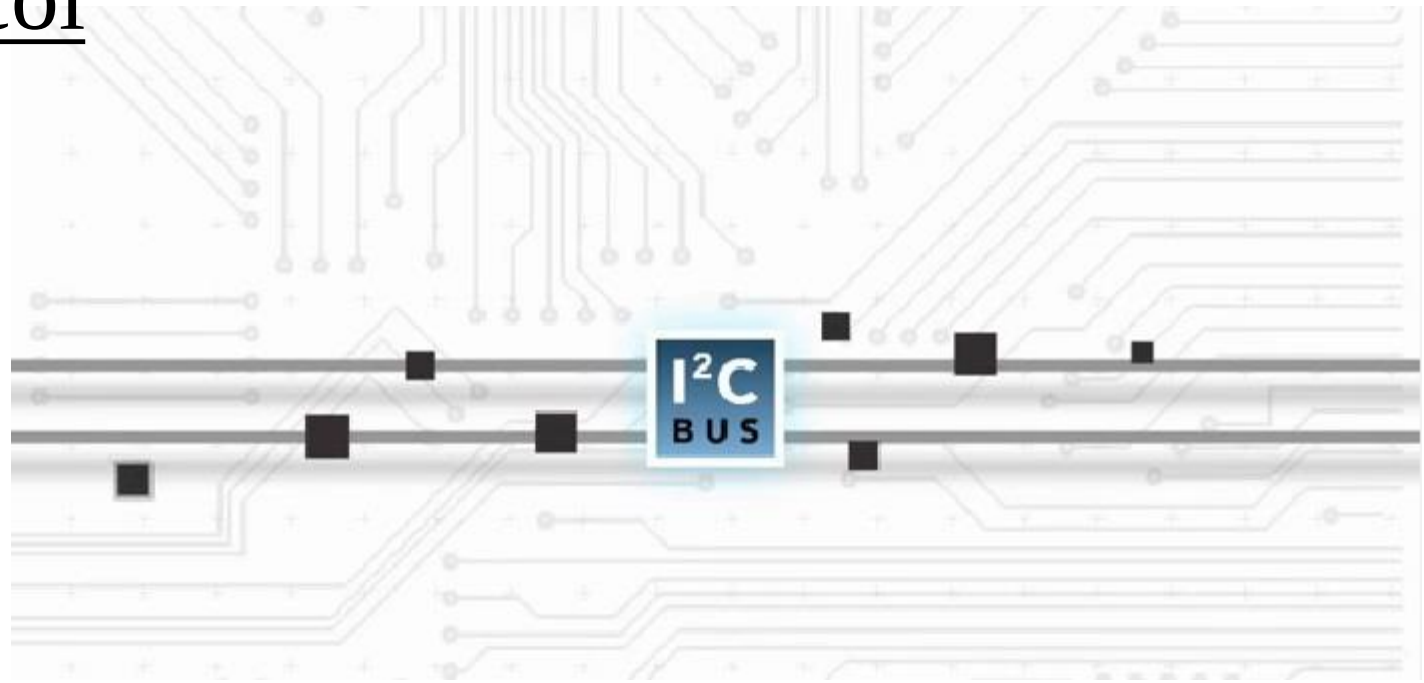

I2c Protocol

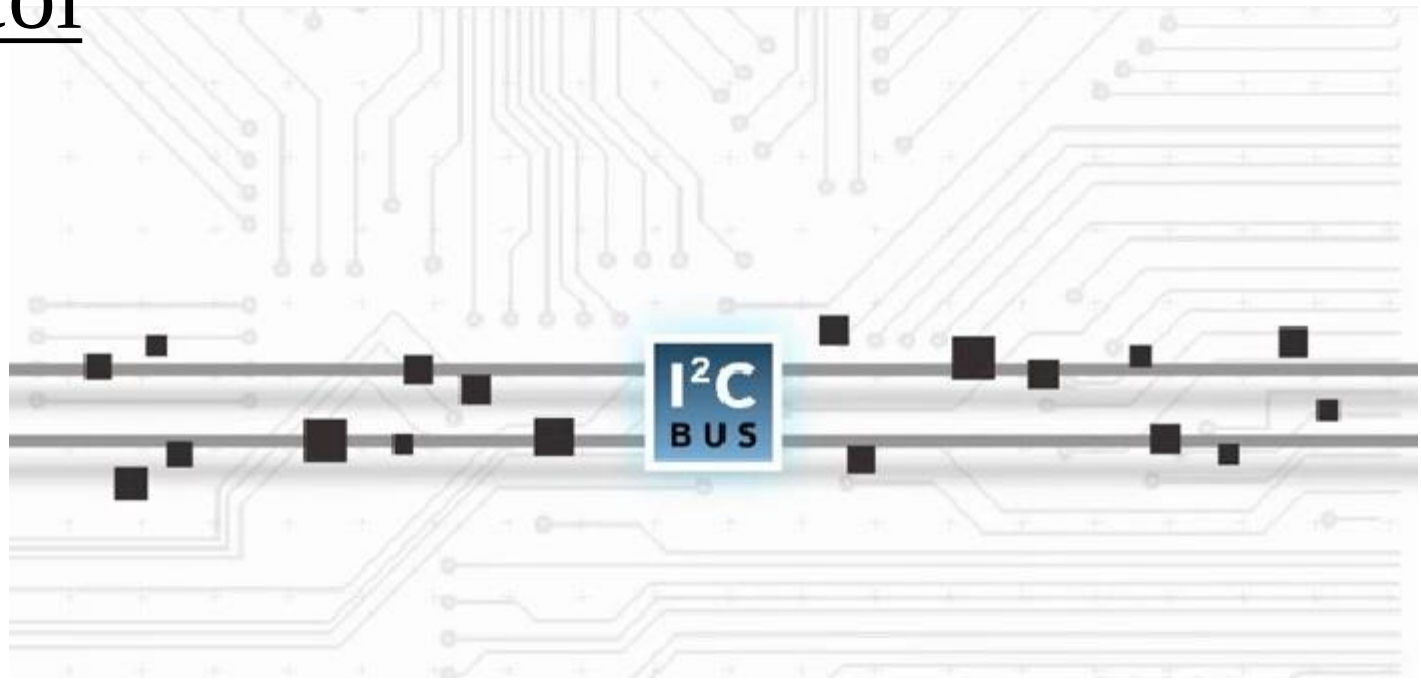

I2c Protocol

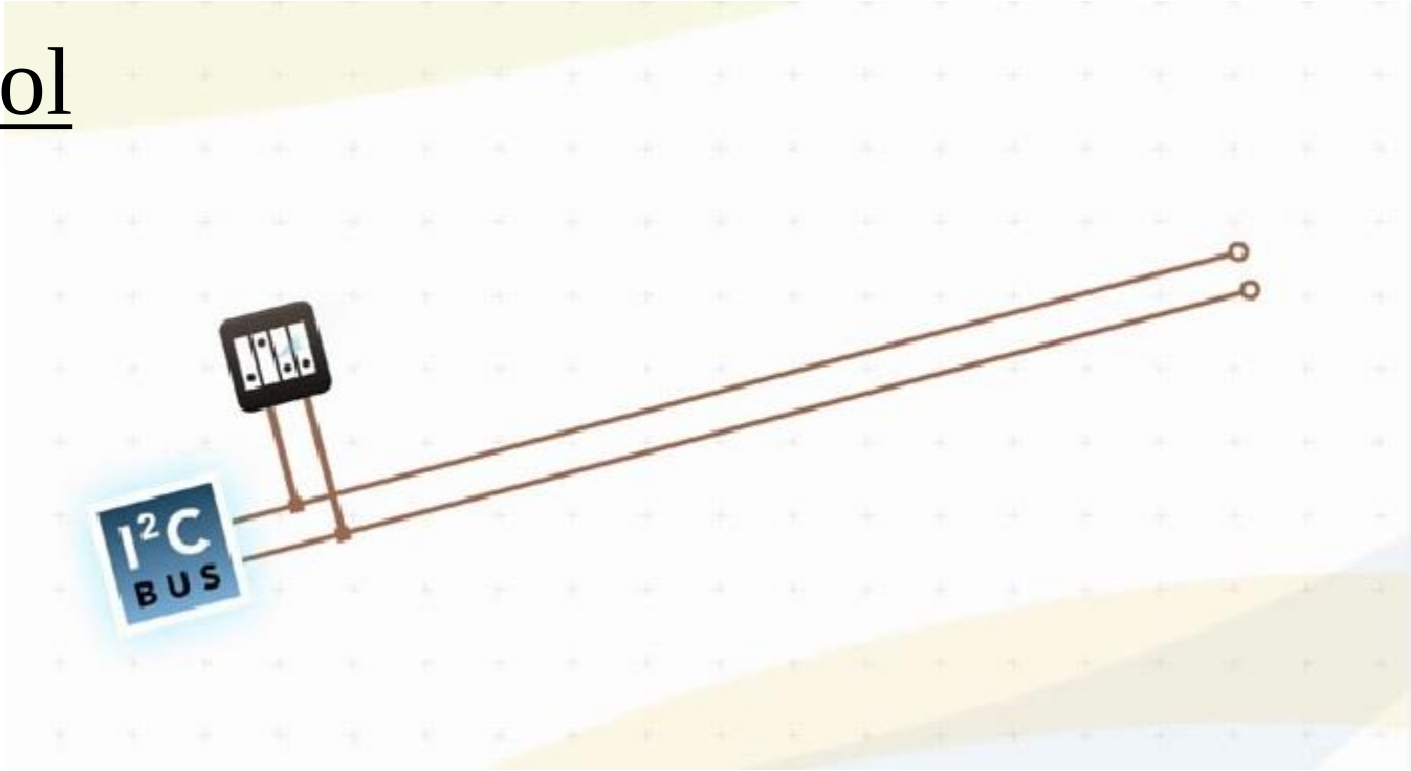

I2c Protocol

I2c Protocol

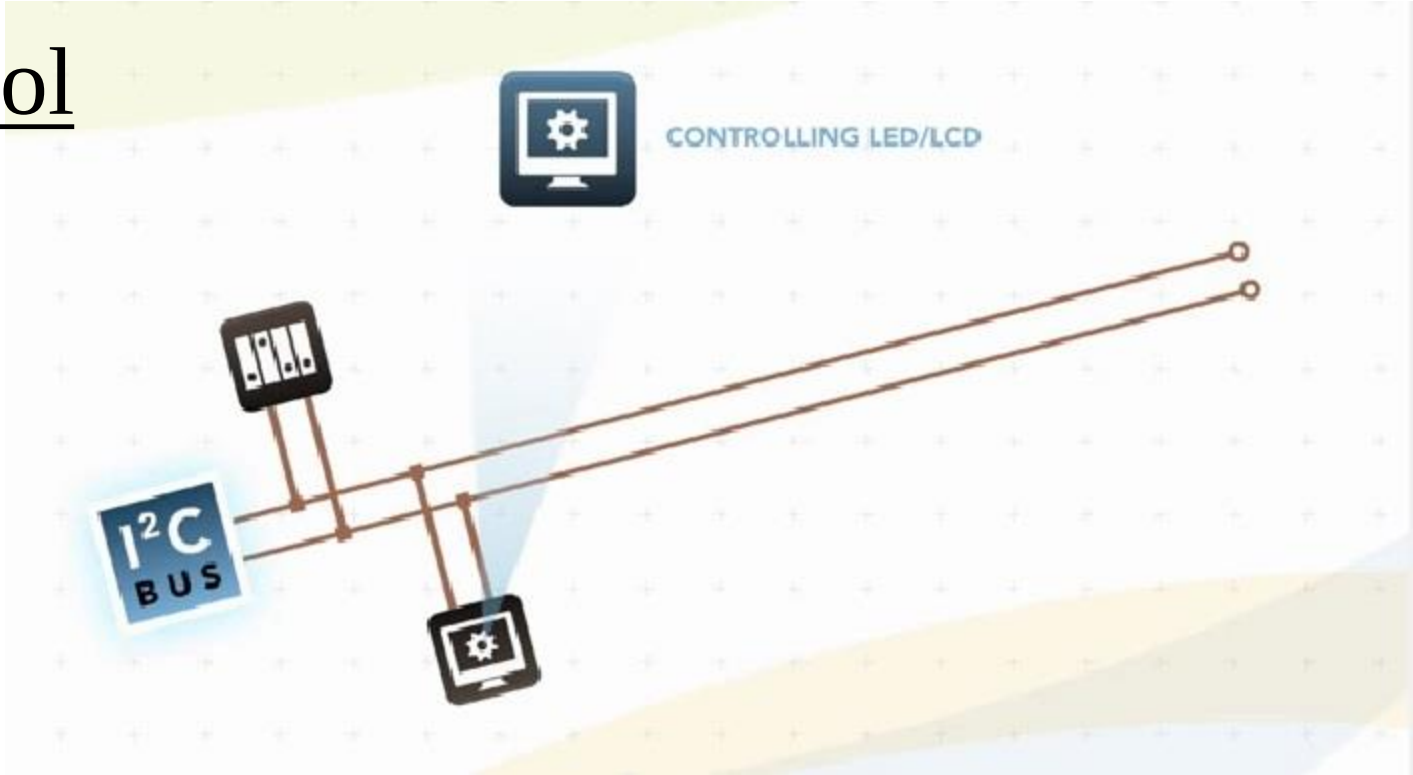

I2c Protocol

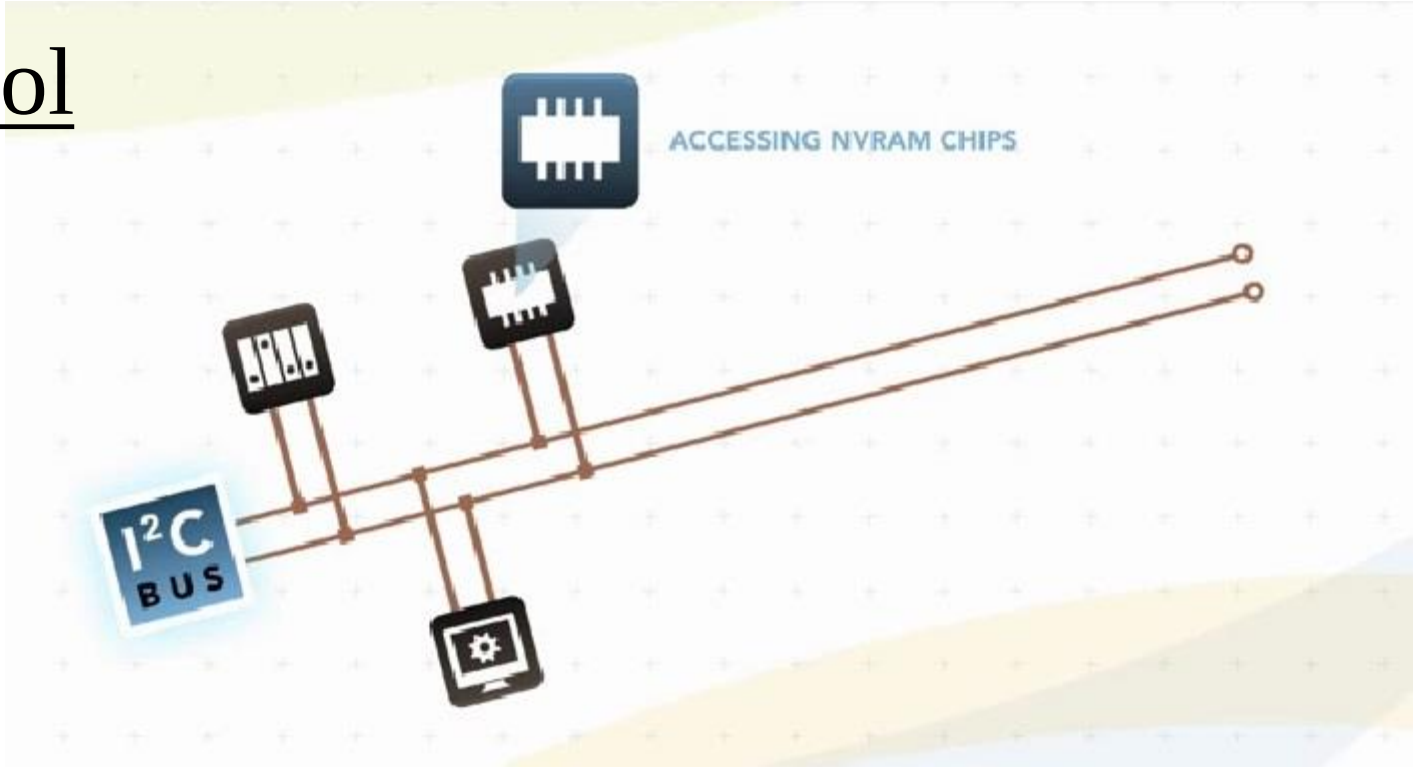

I2c Protocol

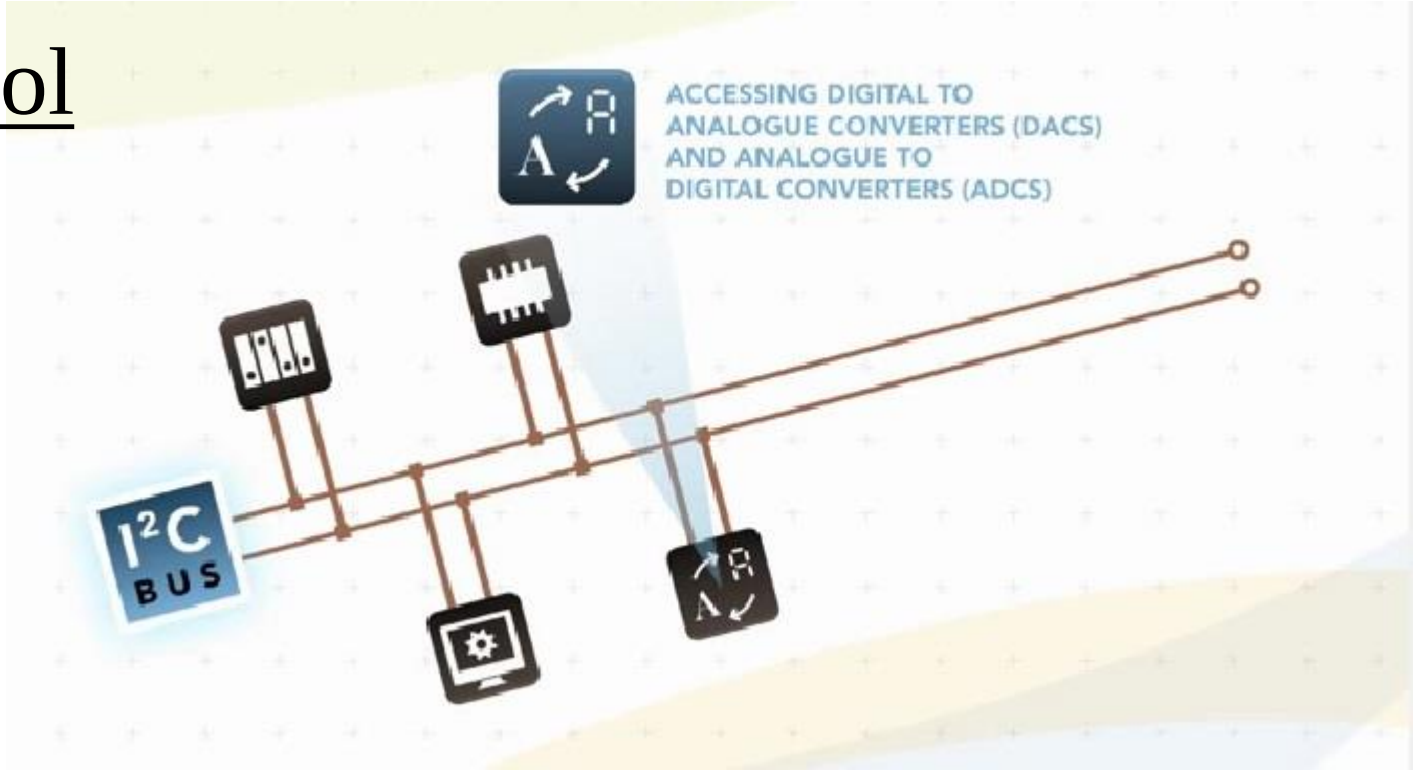

I2c Protocol

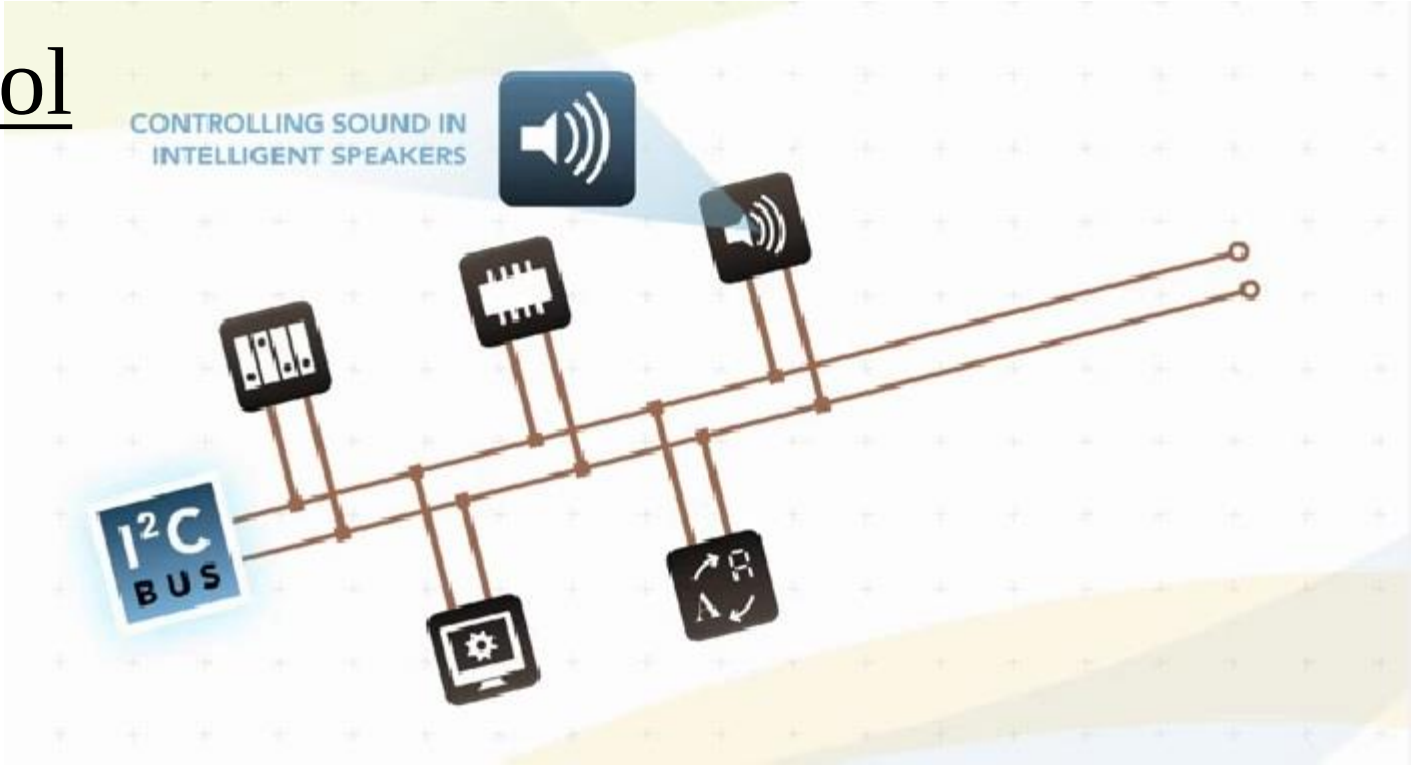

I2c Protocol

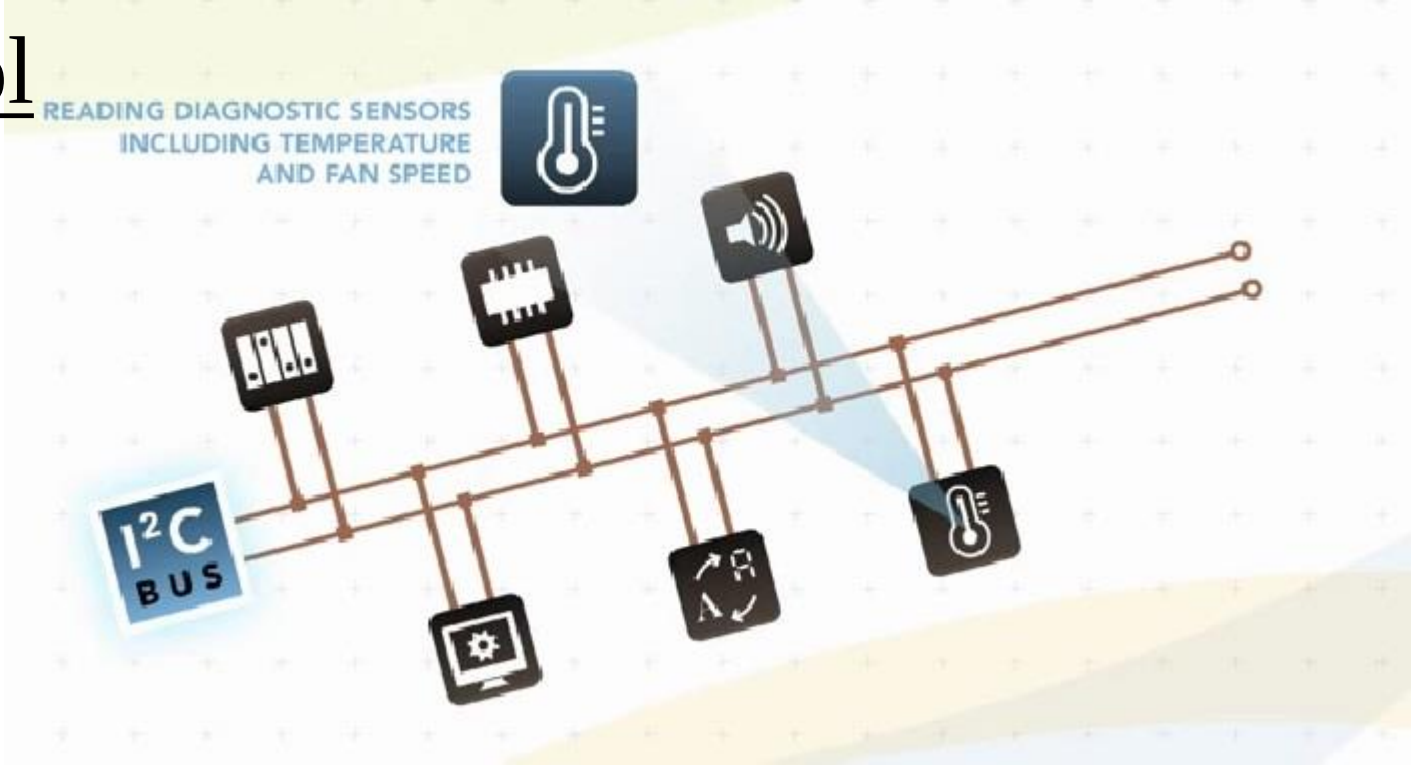

I2c Protocol

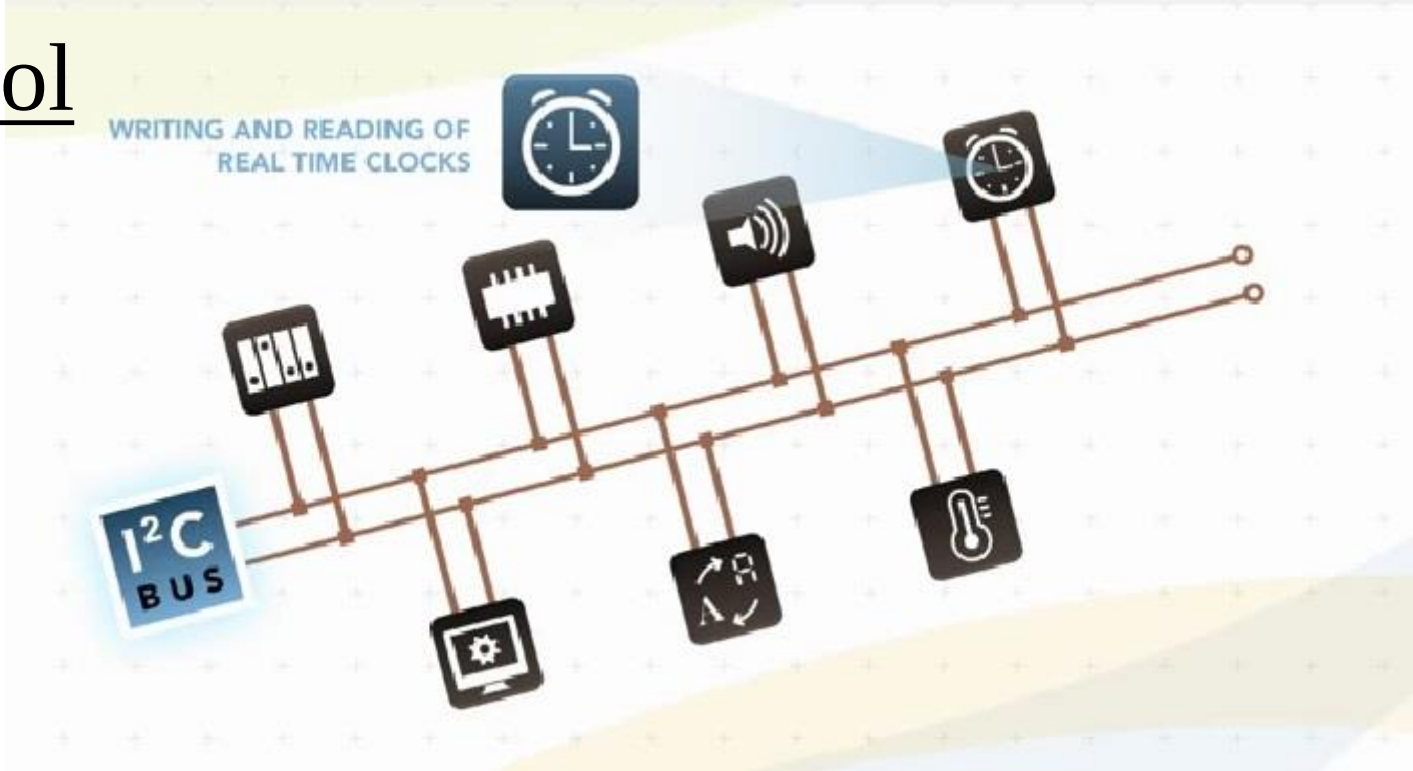

I2c Protocol

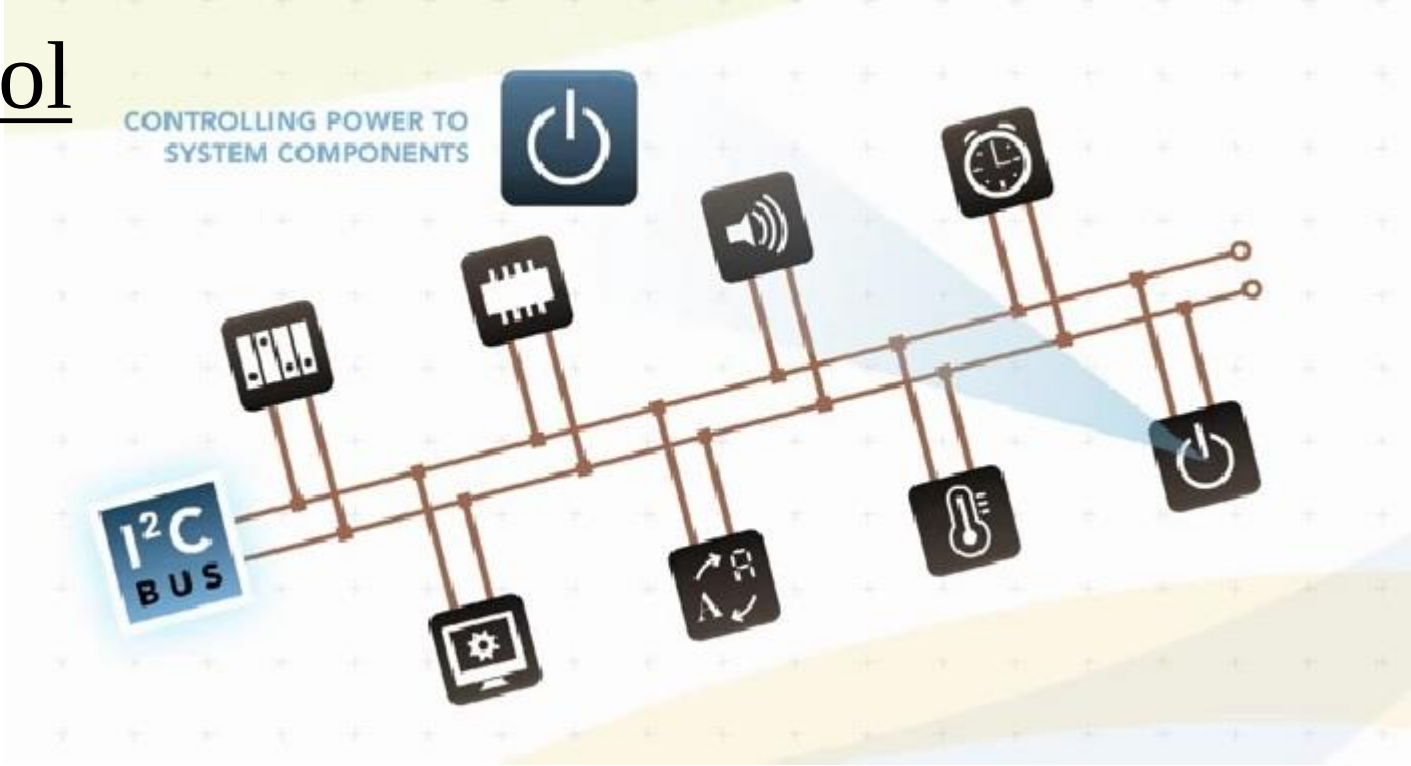

I2c Protocol

- A simple I2c bus can accomodate more Than 100 node and require just two Electrical signals freeing the valuable GPIOs pins for other functionalities.

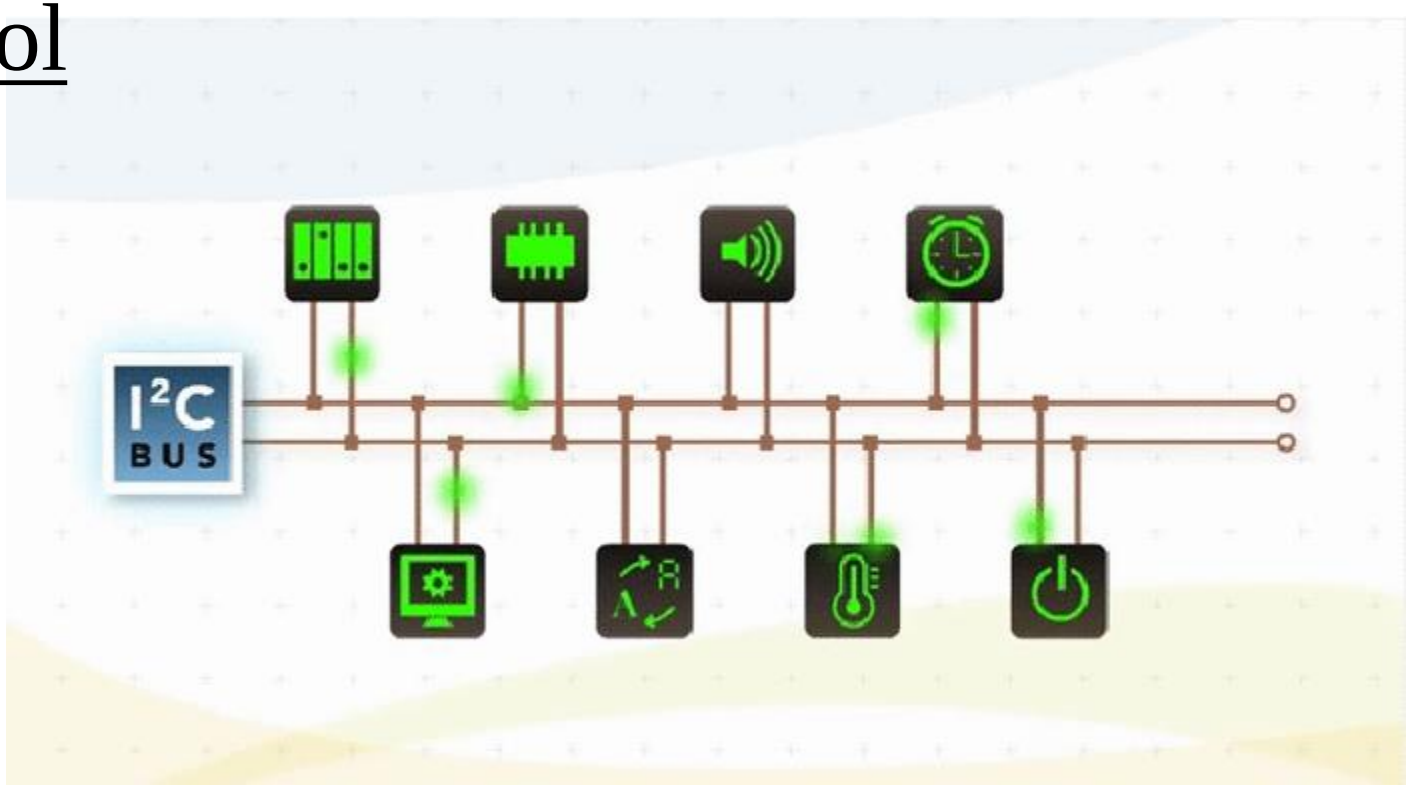

I2c Protocol

- With its effeciency and simplicity I2C protocol is very much powerful as all kinds of sensor provider now a days ship their product with I2C interface.

SparkFun Triple-Axis Digital-Output Gyro Breakout - ITG-3200

SEN-11977 ROHS SHARE

Description: This is a breakout board for InvenSense's ITG-3200, a groundbreaking triple-axis, digital output MEMS gyroscope. The ITG-3200 features three 16-bit analog-to-digital converters (ADCs) for digitizing the gyro outputs, a user-selectable internal low-pass filter bandwidth, and a Fast-Mode I²C (400kHz) interface. Additional features include an embedded temperature sensor and a 2% accurate internal oscillator.

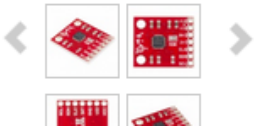

TEXAS INSTRUMENTS

INA219

www.ti.com SBOS448F – AUGUST 2008 – REVISED SEPTEMBER 2011

Zerø-Drift, Bi-Directional CURRENT/POWER MONITOR with I²C™ Interface

Check for Samples: INA219

FEATURES

- SENSES BUS VOLTAGES FROM 0V TO +26V
- REPORTS CURRENT, VOLTAGE, AND POWER
- 16 PROGRAMMABLE ADDRESSES
- HIGH ACCURACY: 0.5% (Max) OVER TEMPERATURE (INA219B)
- FILTERING OPTIONS
- CALIBRATION REGISTERS

DESCRIPTION

The INA219 is a high-side current shunt and power monitor with an I²C interface. The INA219 monitors both shunt drop and supply voltage, with programmable conversion times and filtering. A programmable calibration value, combined with an internal multiplier, enables direct readouts in amperes. An additional multiplying register calculates power in watts. The I²C interface features 16 programmable addresses.

APDS-9300

Digital Ambient Light Photo Sensor with I2C output

All Detail | Description | Features | Documents

The APDS-9300 is a low-voltage Digital Ambient Light Photo Sensor that converts light intensity to digital signal output capable of direct I2C interface. Each device consists of one broadband photodiode (visible plus infrared) and one infrared photodiode. Two integrating ADCs convert the photodiode currents to a digital output that represents the irradiance measured on each channel. This digital output can be input to a microprocessor where illuminance (ambient light level) in lux is derived using an empirical formula to

I2c Protocol

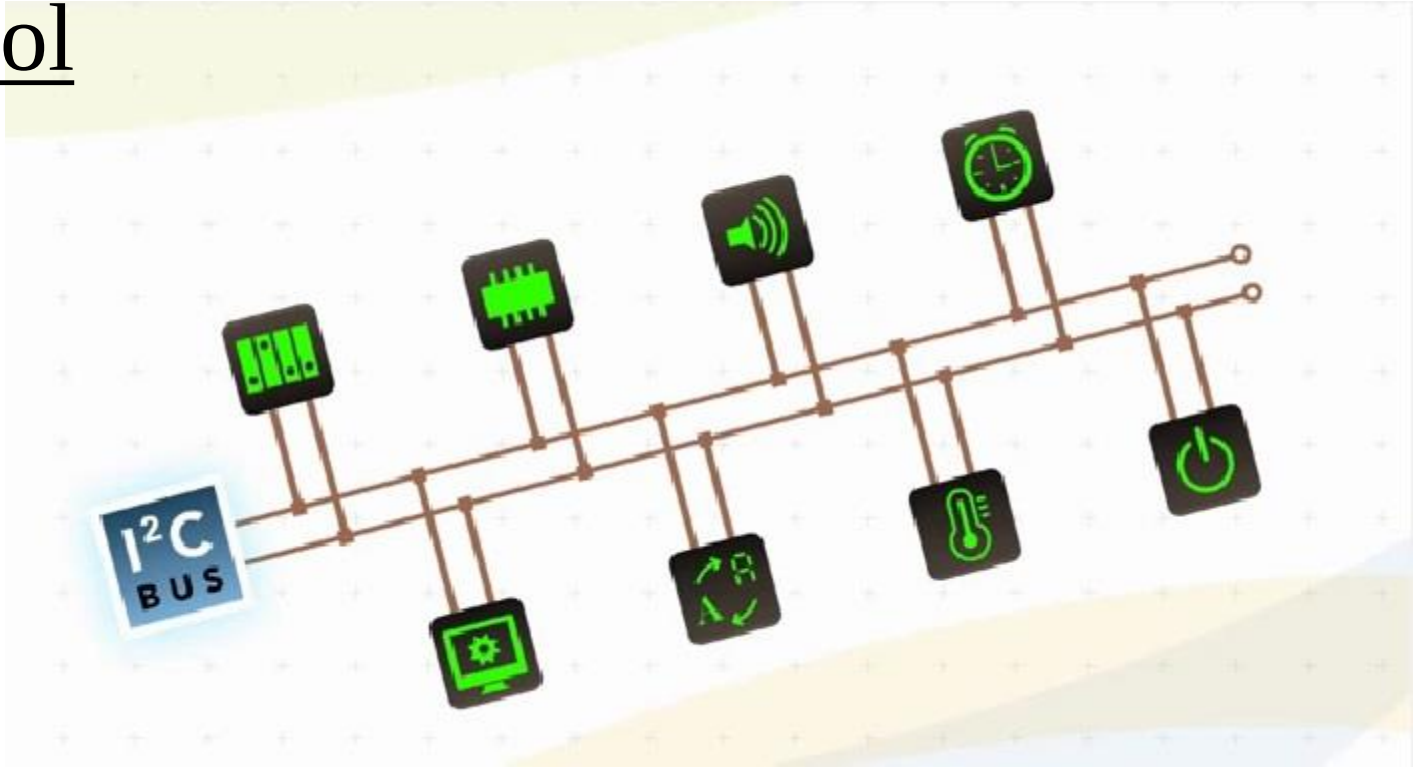

I2c Protocol

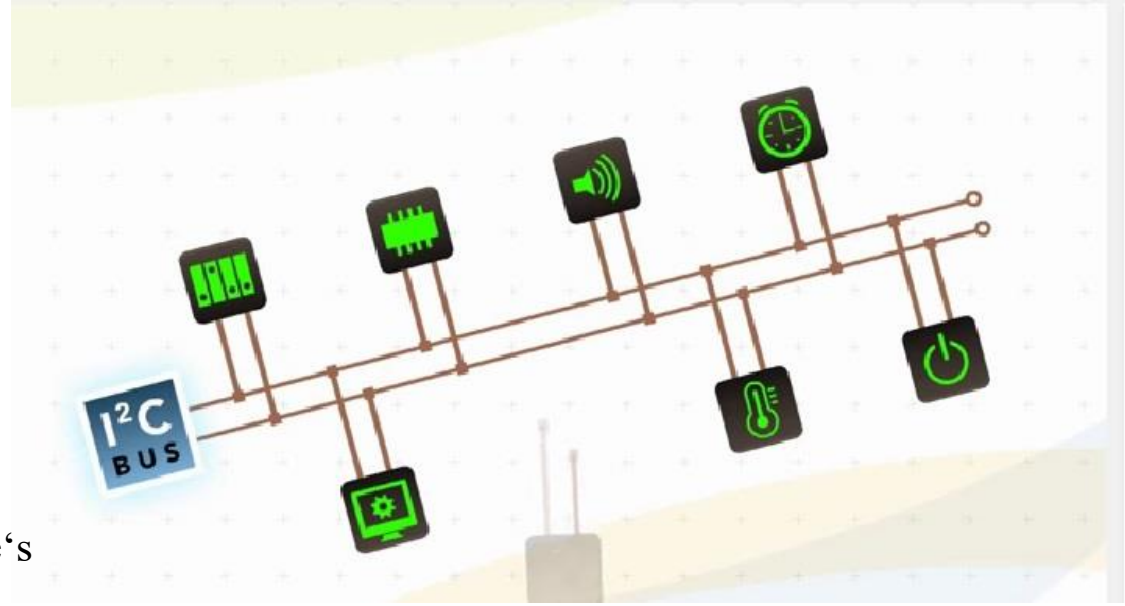

- With I2C **the functions and features can easily be added or remove** by just programming The microcontrollers for new device‘s address and Functionality without affecting the system.

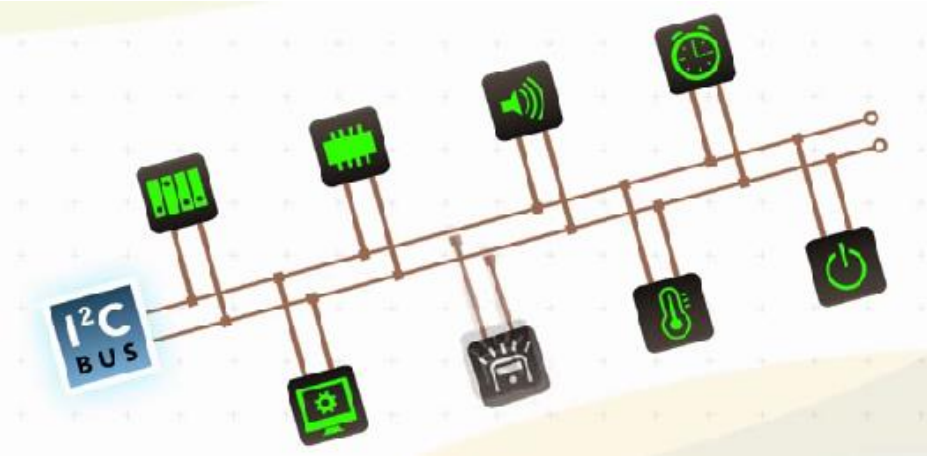

I2c Protocol

Run Time Change in the System is Possible.

- Functions can be added or removed from the I2C bus while the system is running.

- Commonly called **HOT SWAP**. Its a Unique solution for applicaton that require component replacement without shutting down the systems.

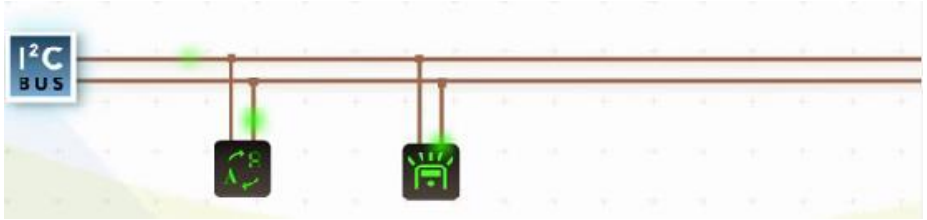

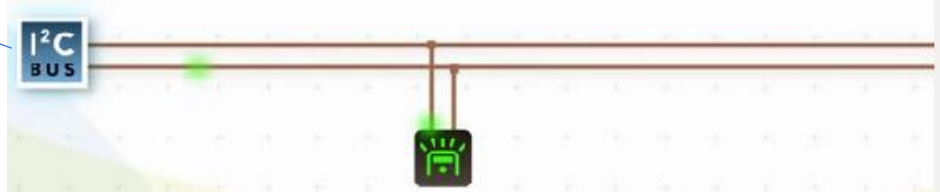

I2c Protocol

- I2C on chip interfaces allows the bus master to read and write the bus slave which has result in many itnerface challenges when designing Digital Control Circuits.

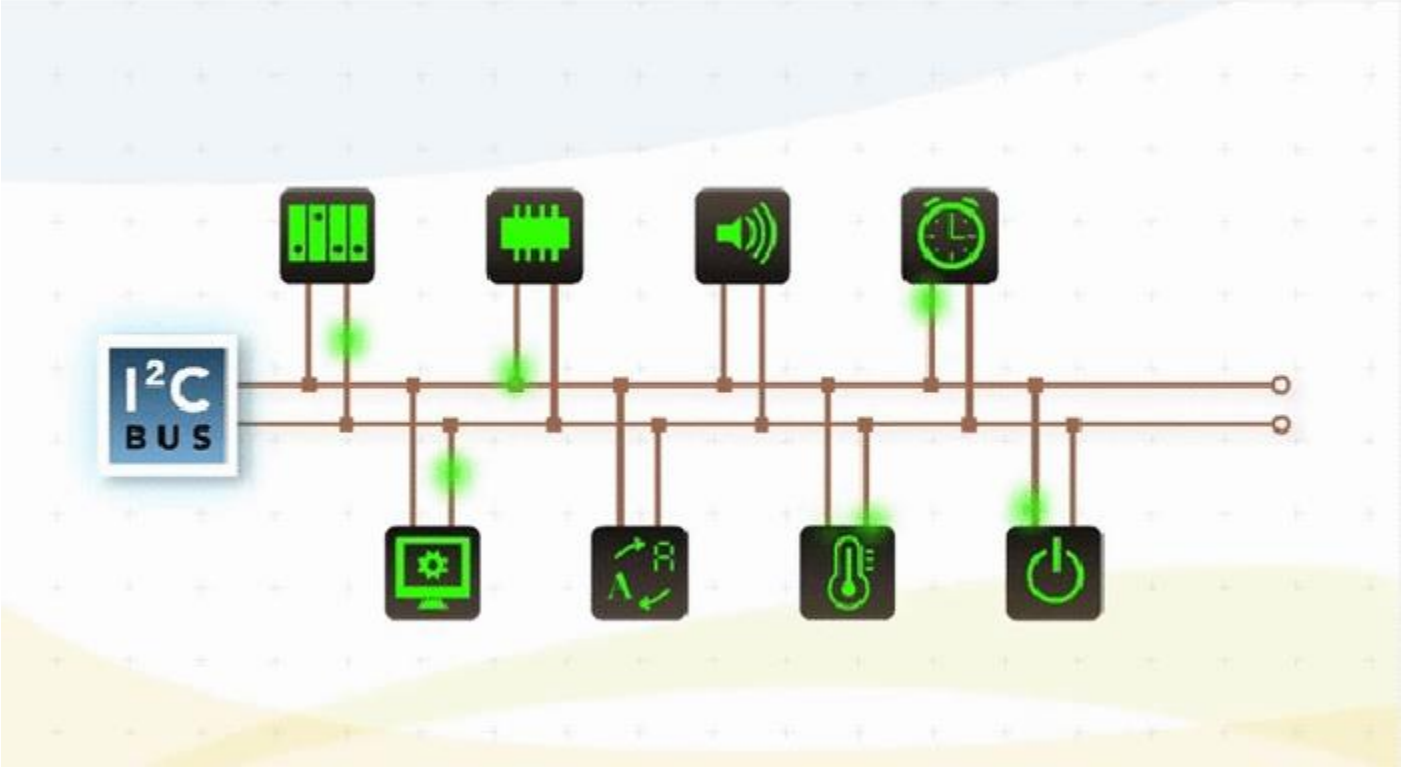

I2c Protocol

- The result is that the I2C interface has become a world wide interface in thousands of the products used by all of us everyday.

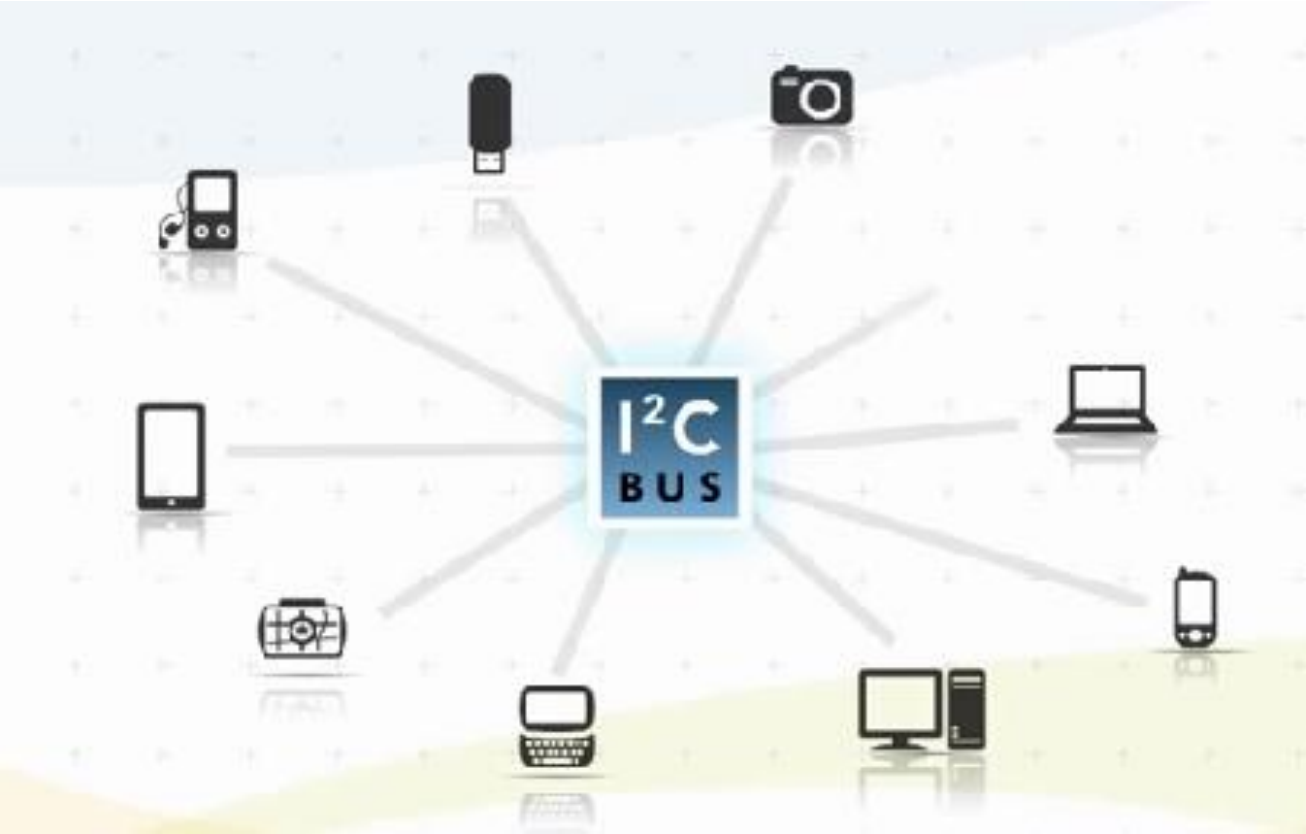

I2c Protocol

- I2c is a multi-master serial bus.
- This means that it requiers fewer bus lanes than other buses.
- It is used to connect devices to an embedded system.
- This is ideal because devices can be removed froma a system wiotut affecting any other circuit on the bus.

Serial Bus

I2c Protocol

Modes of Operaton

- I2C has two Modes of Operations.
  - Master Transmit
  - Master Recieve.

Capabilities.

- Bus Arbitration
- Clock Synchronisation.

I2c Protocol

I2c Architectural Design:

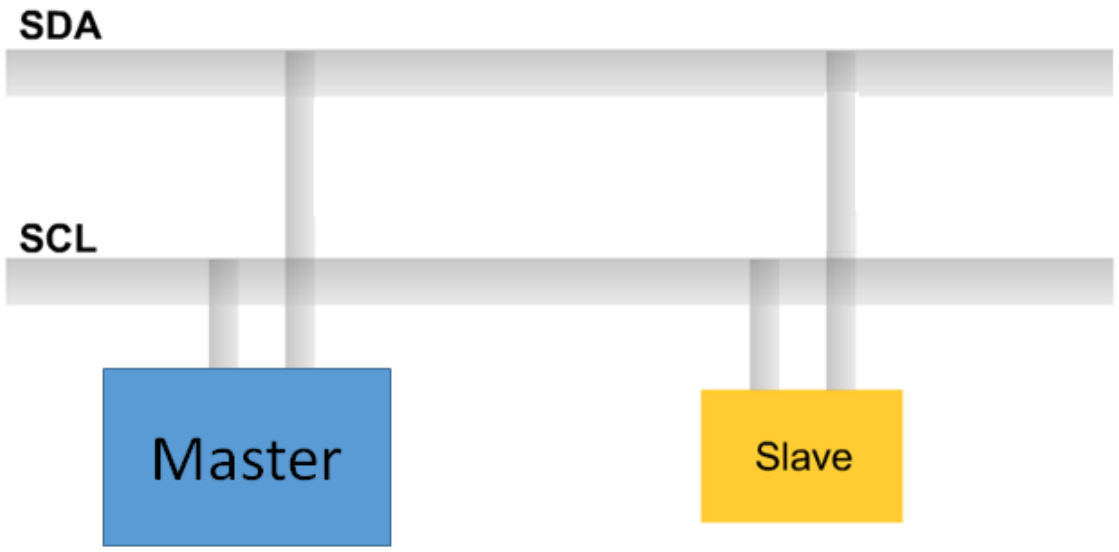

- The i2c bus consists of two wires: the first wire, or lane, on the I2c bus is the SDA.
- This is the lane that transfers data from one device to another.
- The other lane is the SCL, which contains the clock line.
- It is used ot syncrhonize all the data transfers on the bus.
- Both lanes are bidrectional, meaning that data can be transferred in both direction of the wire

I2c Protocol

I2c Architectural Design:

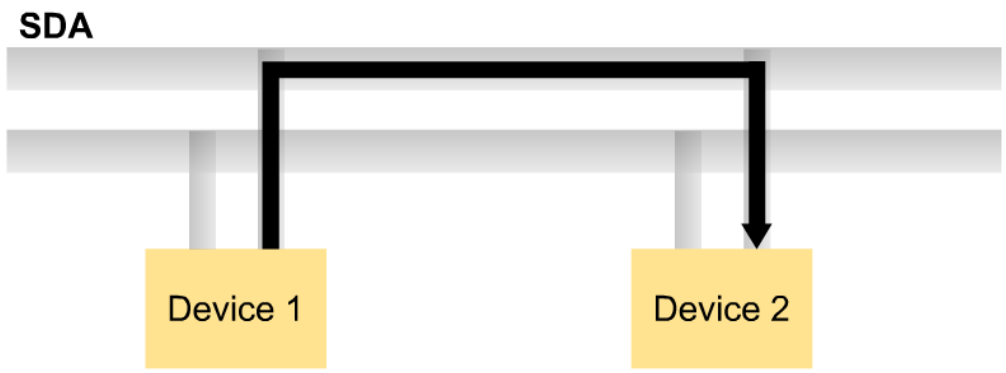

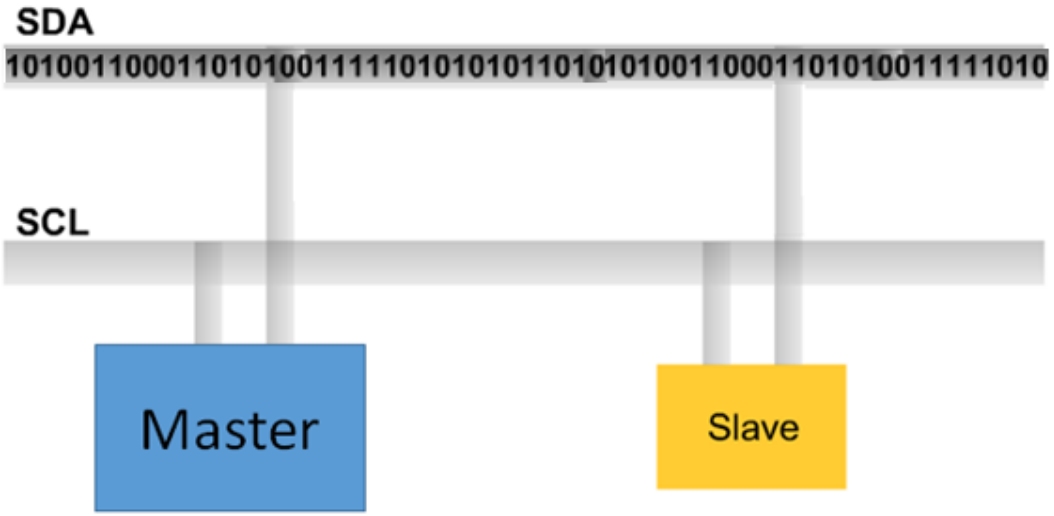

- The first wire, or lane, on the I2c bus is the SDA.
- This is the lane that transfers data from one device to another.

I2c Protocol

I2c Architectural Design:

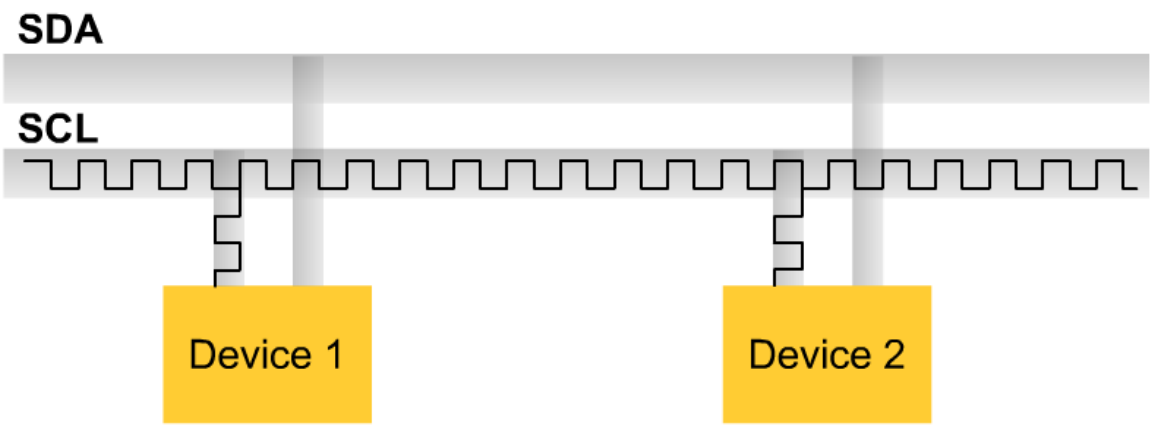

- The other lane is the SCL, which contains the clock line.
- It is used ot syncrhonize all the data transfers on the bus.

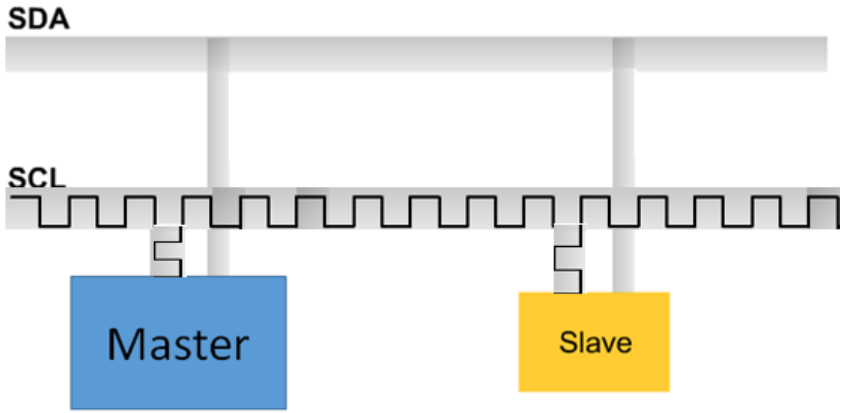

I2c Protocol

I2c Architectural Design:

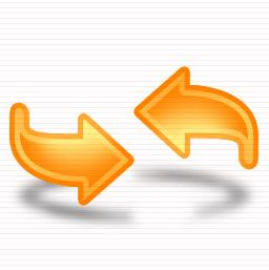

- Both lanes are bidirectional means that the data can be transferred on both direction of wire.

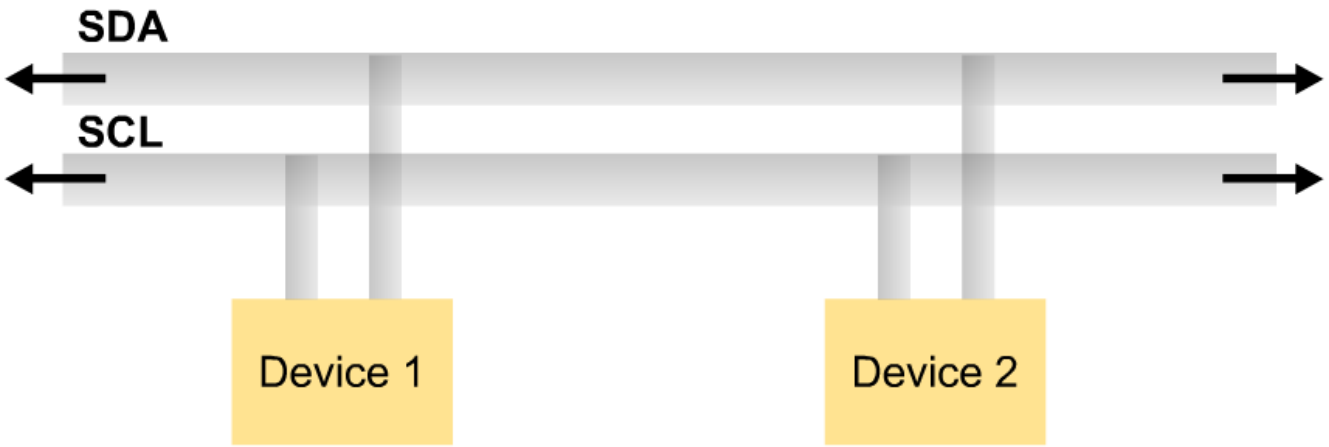

I2c Protocol

I2c Architectural Design:

- Devices that are connected to the I2C Bus can act as either Mater or Slave

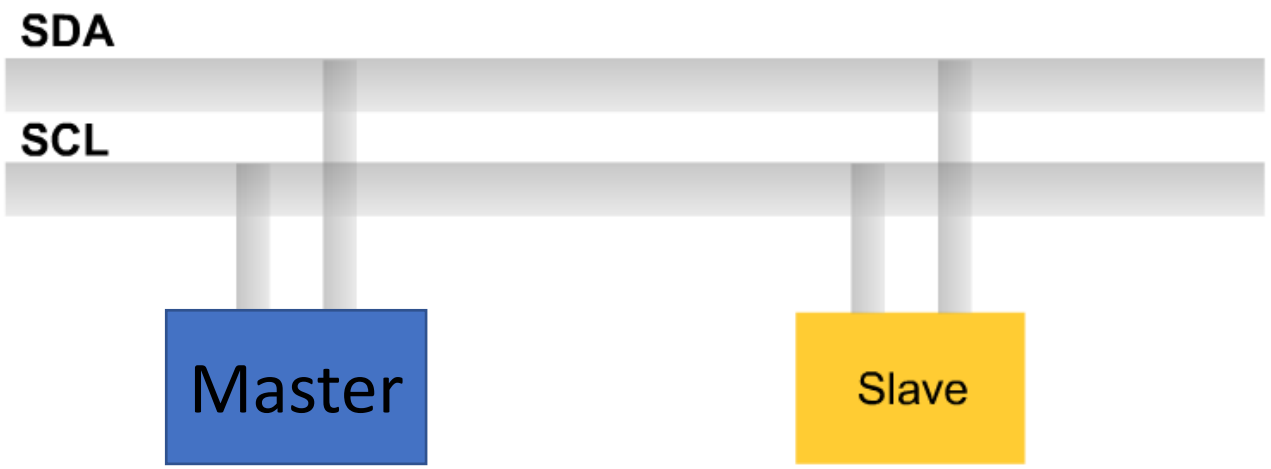

I2c Protocol

I2c Architectural Design:

- Master are devices that initiate transfers and can drive both the SDA and SCL lines.
- Slaves are devices that are being addressed by the master. It can only issue data on the SDA line.

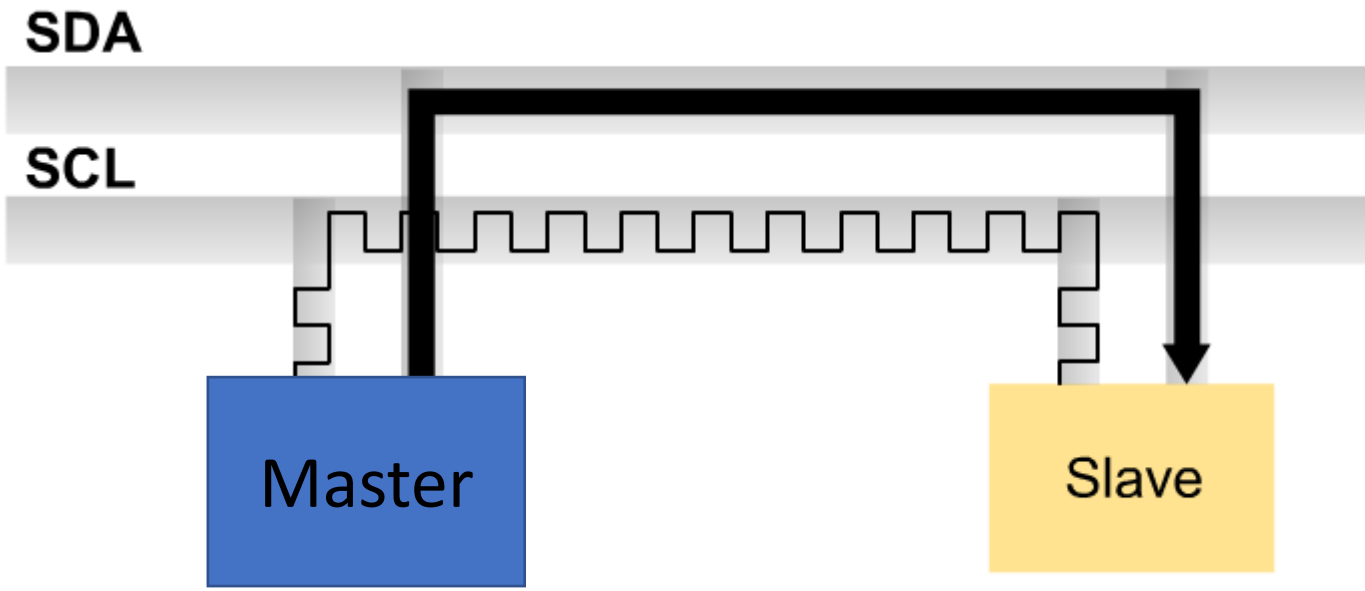

I2c Protocol

I2c Bus sequences.

- Before we see how the data transfer actually works we will see the bus sequences:

- When the SCL (clock) is high, the SDA (data line) must remain stable and cannot change .

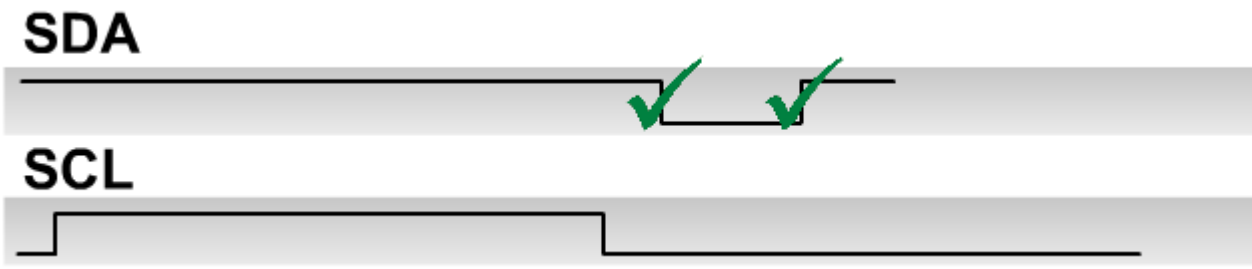

- Only when the clock line is low can the data line change. However thare are 2 exceptios. Start and Stop Sequences.

I2c Protocol

I2c Bus sequences.

Exception

- In a START Sequence, the SDA line is driven low while the SCL line is still high. This signals the beginning of a transation with a slave device.

- In a STOP Sequence, the SDA line is driven high while the SCL line is high. This signals the end of transaction with a slave device.

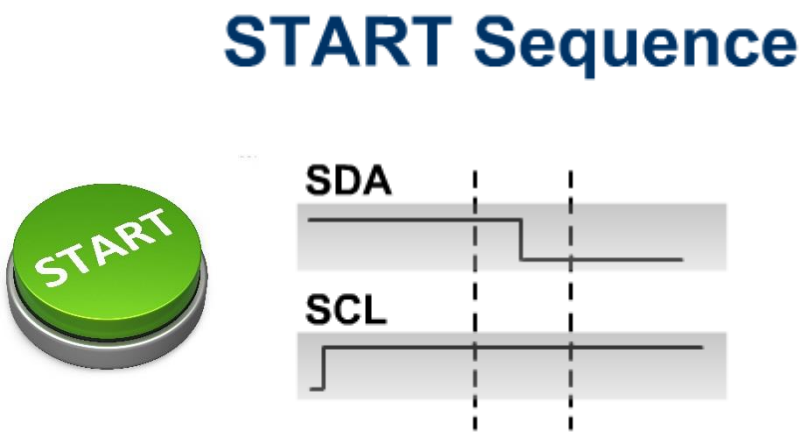

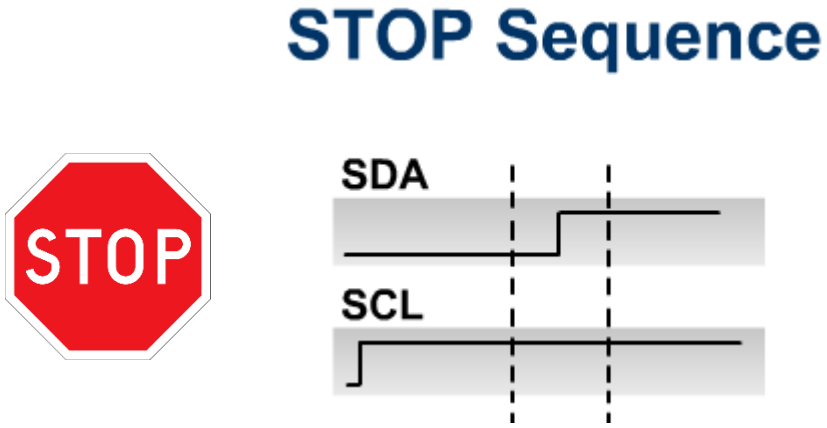

I2c Protocol

How the SCL and SDA lines are pulled High and Low

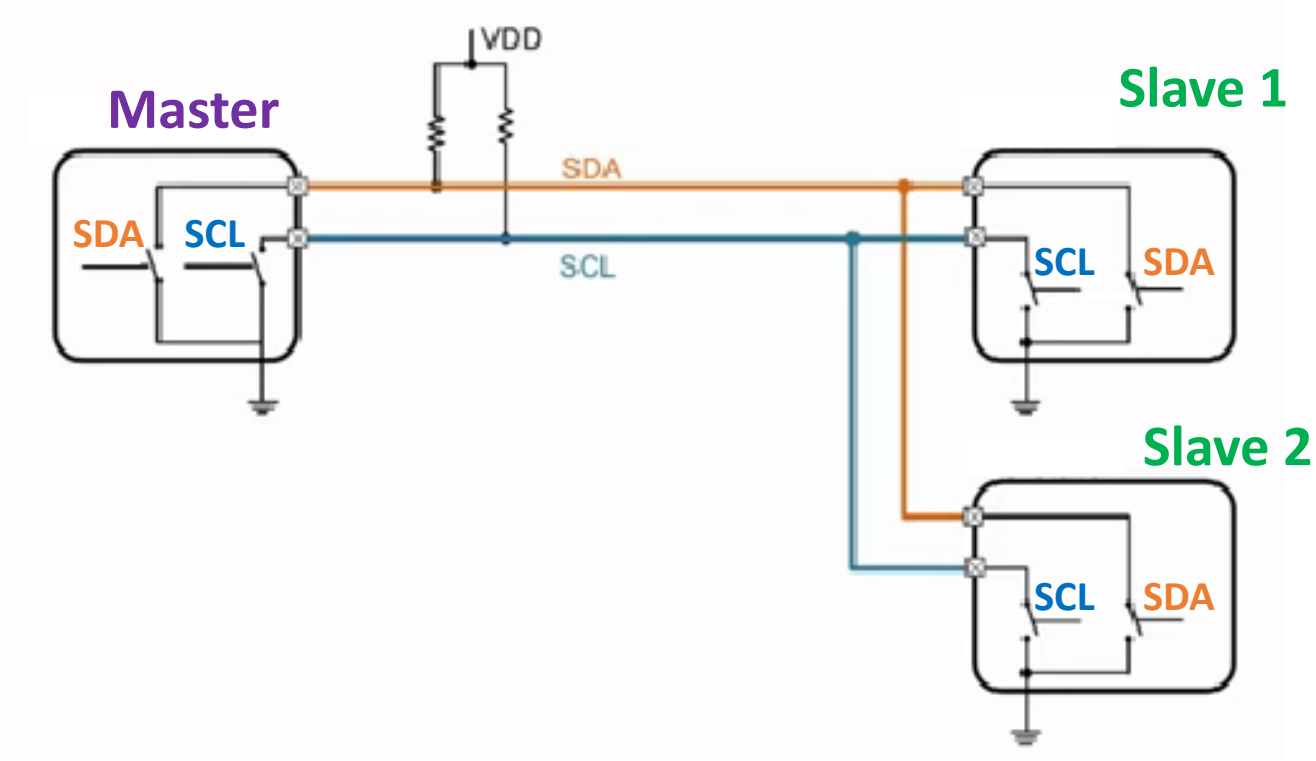

I2c Protocol

- We will now discuss the protocol the bus uses for Transmitting and Recieving data.
- Evey device on the bus has its own unique address and because I2c is multi-master, Each device can act as either a master or a slave at any given time,

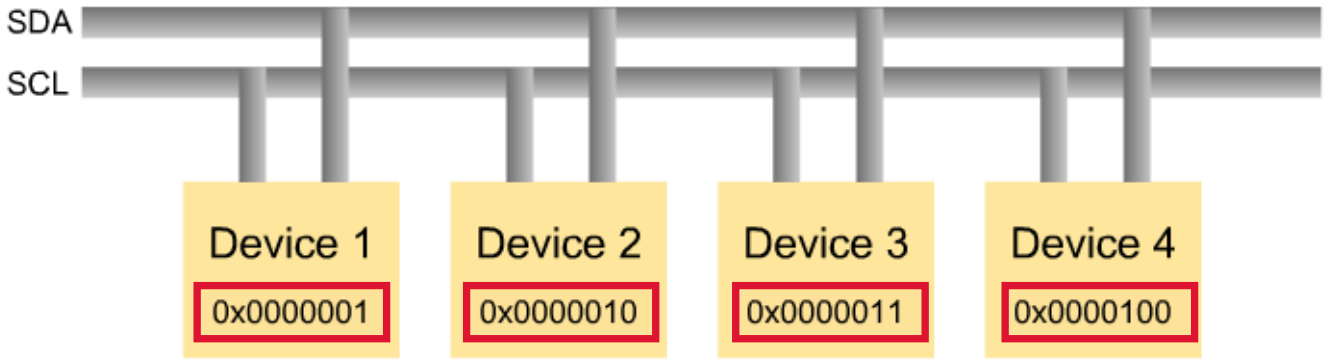

I2c Protocol

- Evey device on the bus has ist own unique address and because I2c is multi-master, Each deice can act as either a master or a slave at any given time,

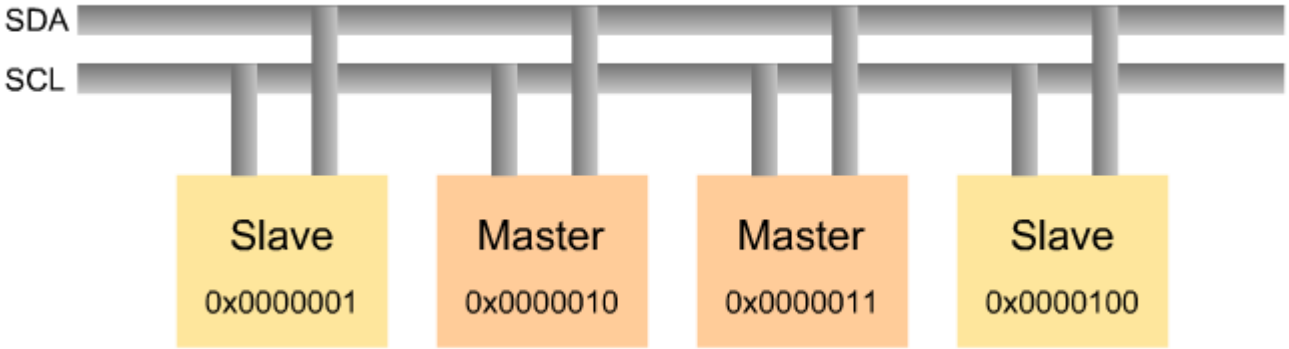

I2c Protocol

- Evey device on the bus has ist own unique address and because I2c is multi-master, Each deice can act as either a master or a slave at any given time,

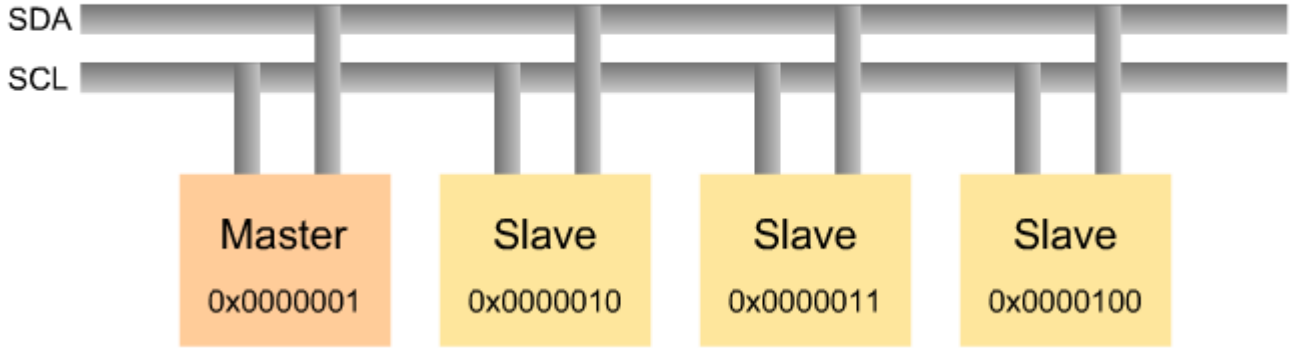

I2c Protocol

- Evey device on the bus has ist own unique address and because I2c is multi-master.Each device can act as either a master or a slave at any given time,

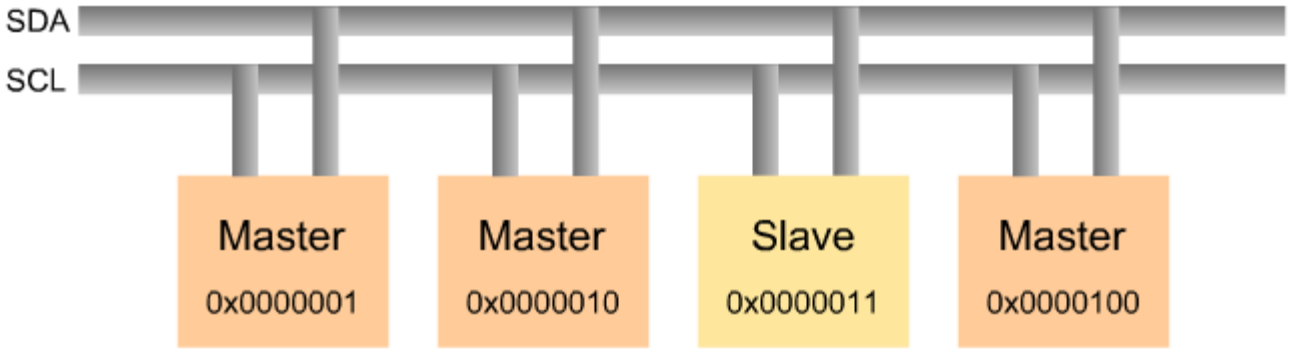

I2c Protocol

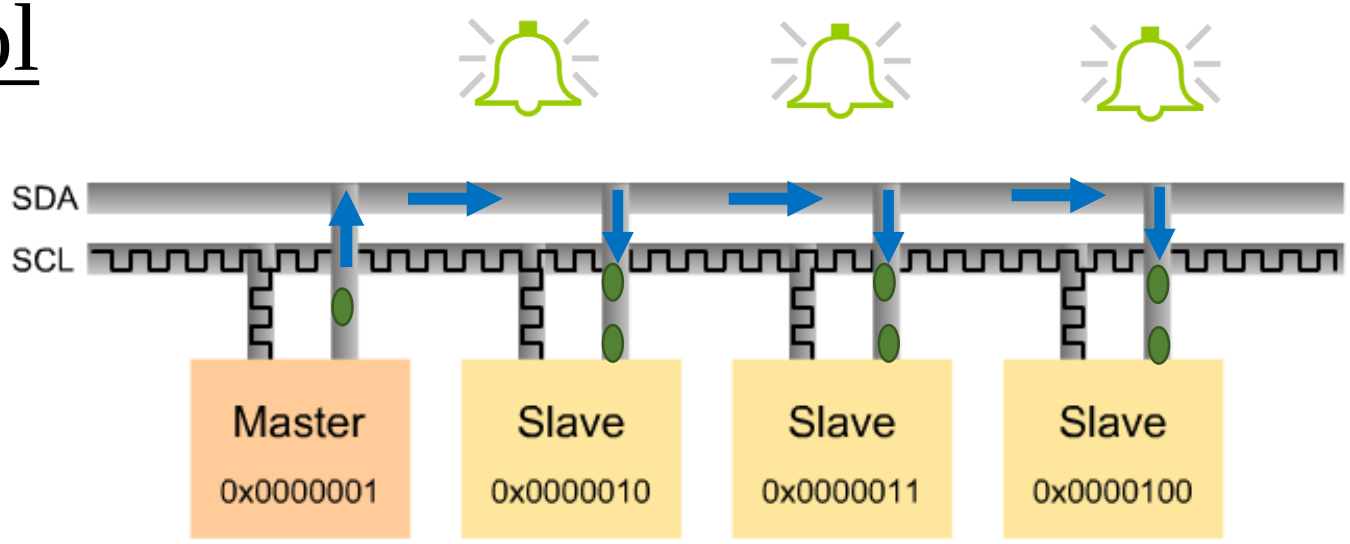

- First , the START sequence is sent by the master to alld devices on the bus.

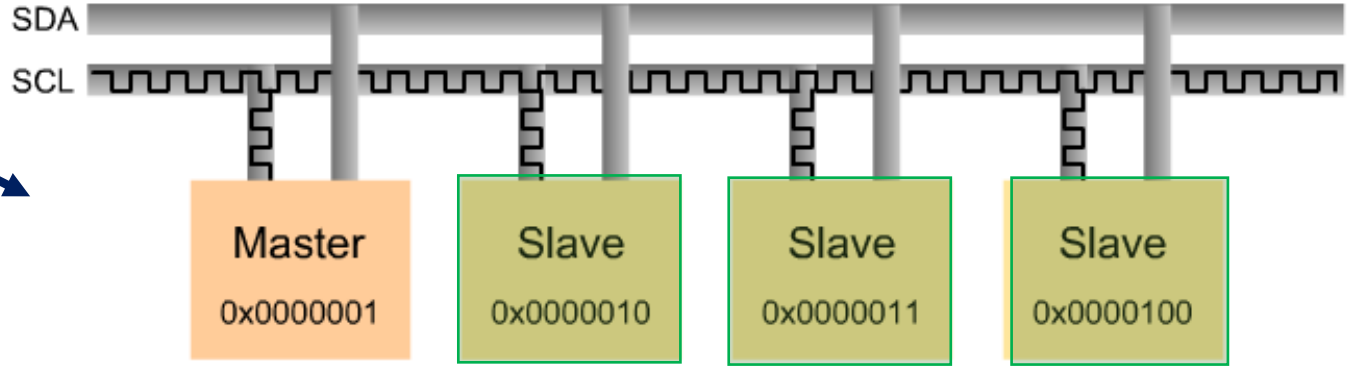

- This start sequence alerts all the devices on the I2C network that a transmision is going to happen.

I2c Protocol

- The master device thenSends an Address of the devie it wants to access, along with a rad or write operation.

- All slave deices will compareThis address with their own To see if there is a match.

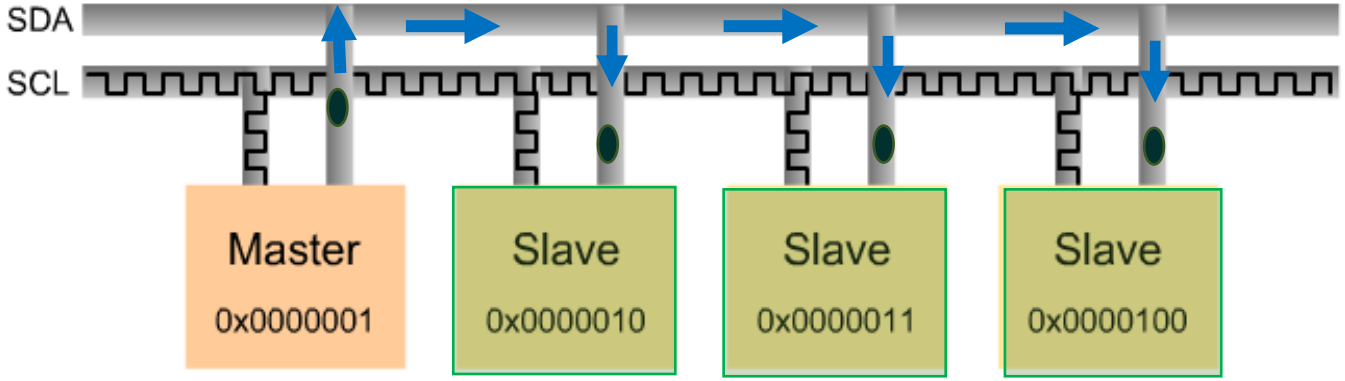

I2c Protocol

- If there is any slave with the same address as sent by the master , the slave will then produce An ACK signal.

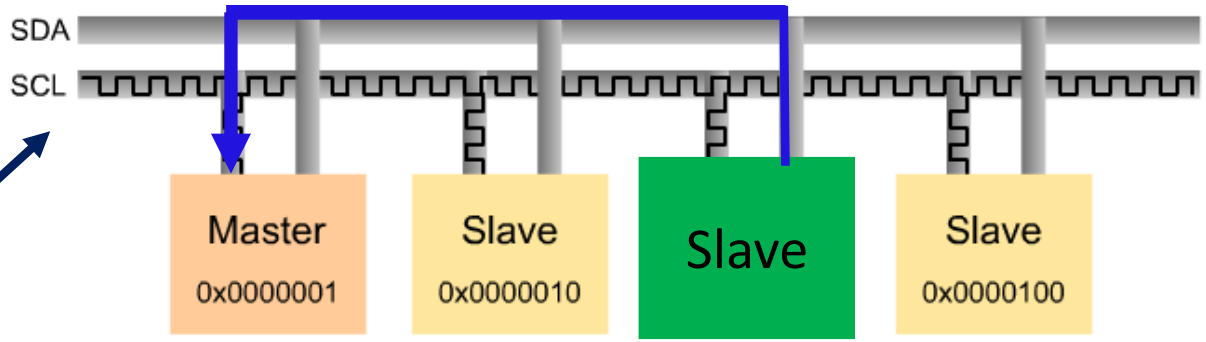

- Slaves that do not match the address simply wit until the bus is released by the STOP sequence.

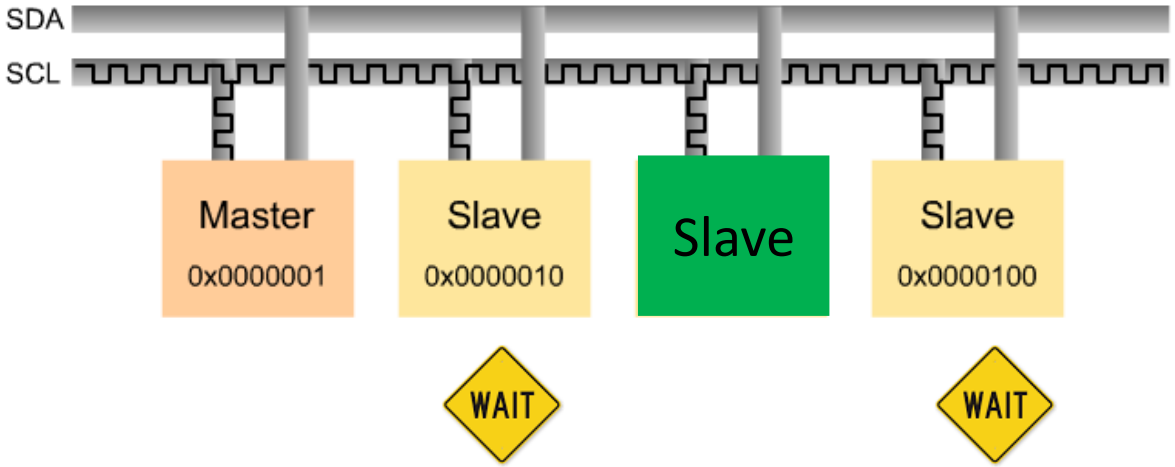

I2c Protocol

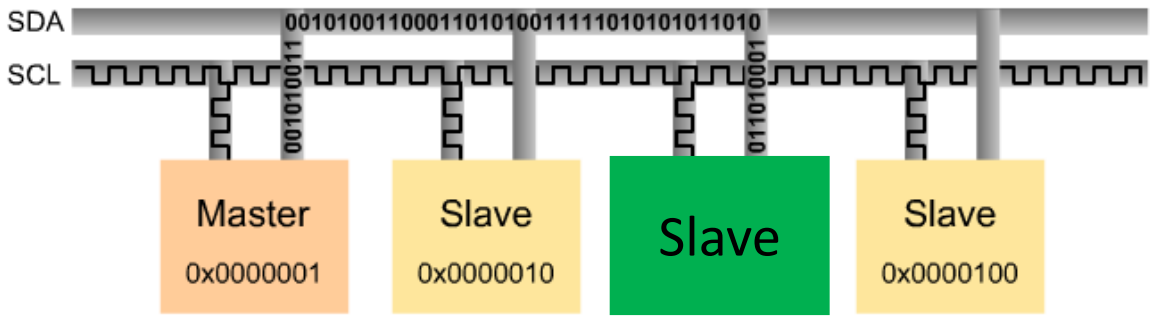

- Once the master receives the ACK SIGNAL:
  It starts transmitting or receiving data.

- When all is done, the master will issue a STOP condition

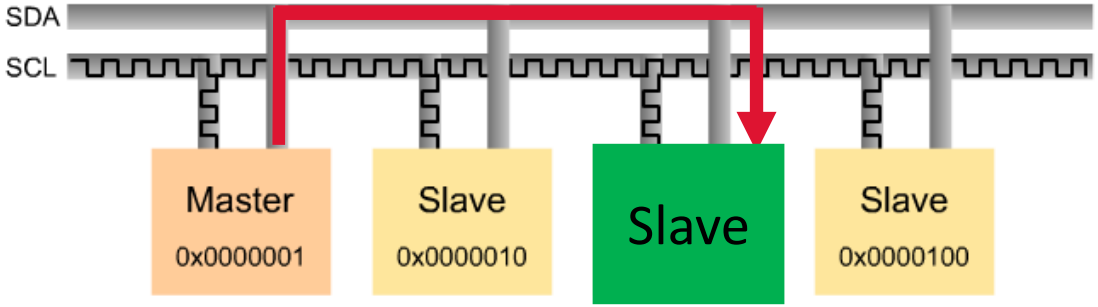

I2c Protocol

- As we have seen how the data is transfereed Now lets talk about what exactly this data is:

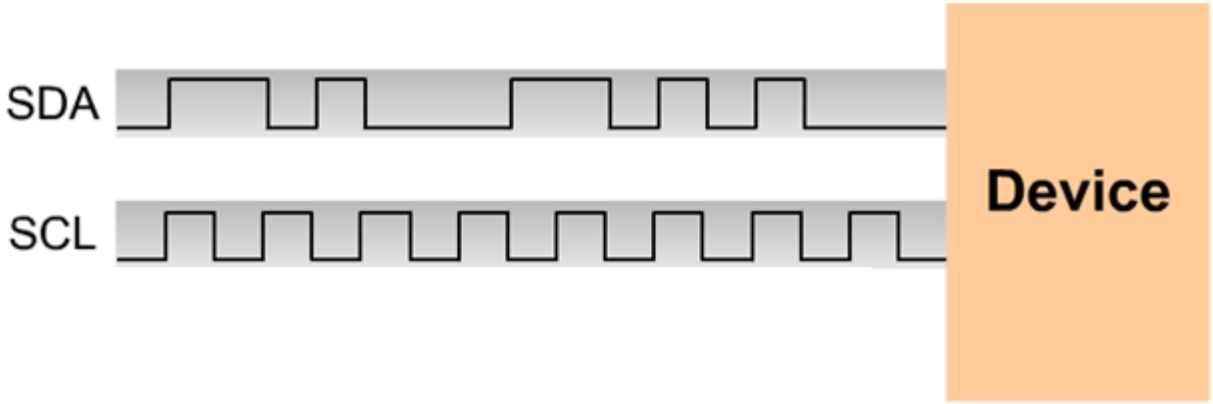

I2c Protocol

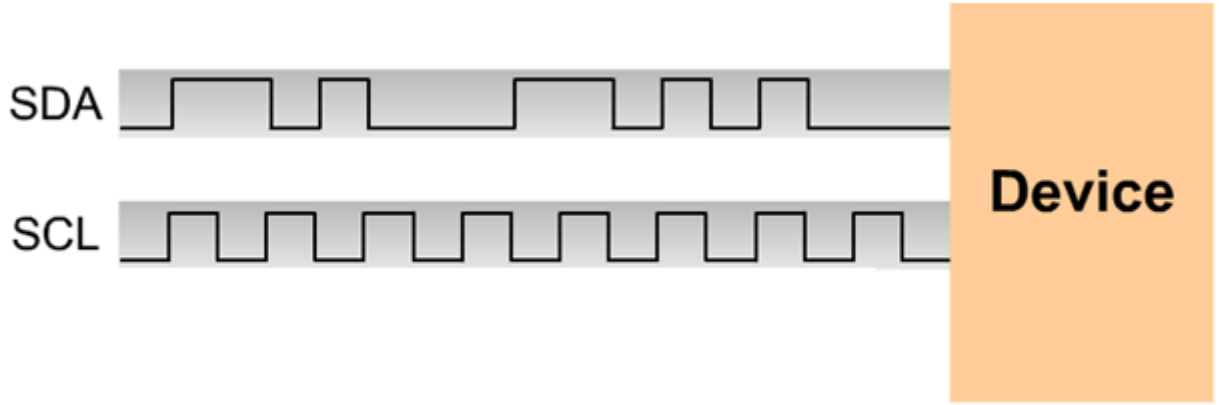

- The master first sends out a 7-bit address.
- Along with this address is a 1-bit READ/WRITE to indicate the type of Operation.

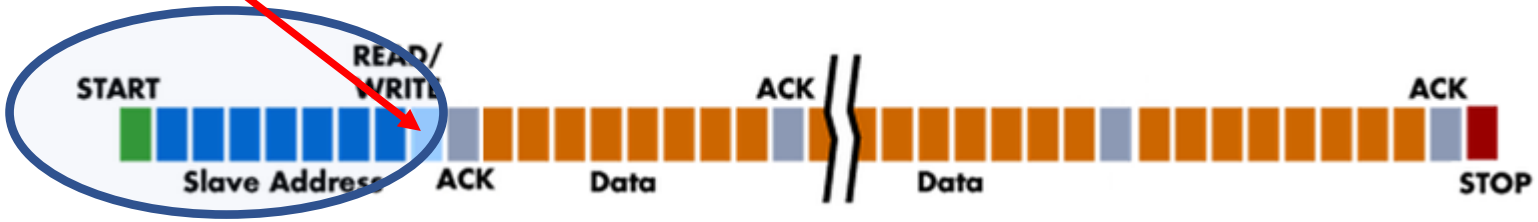

I2c Protocol

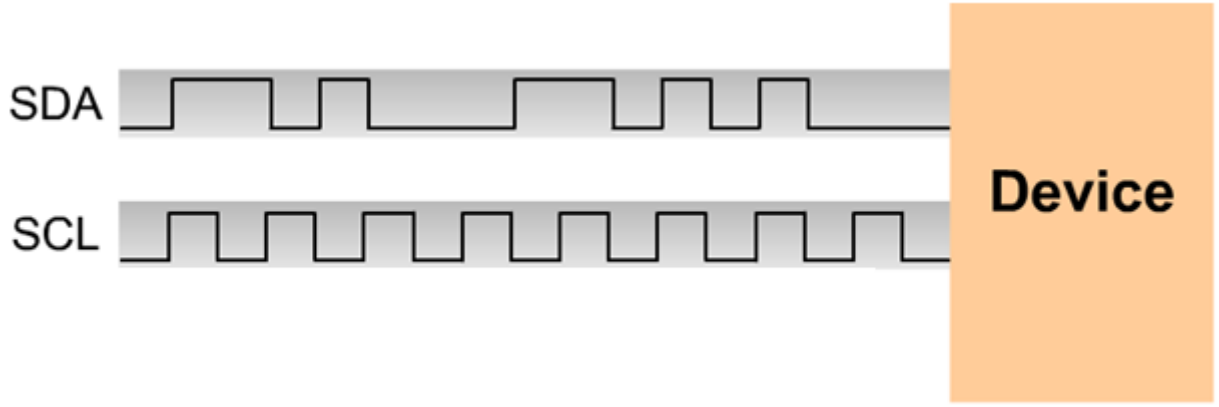

The I2c Data Transfers.

- Data is transferred in sequences of 8 bits that are placed on the SDA line, While the SCL line is pulsing
- Data is read by Master and/or slave while the SCL line is low.

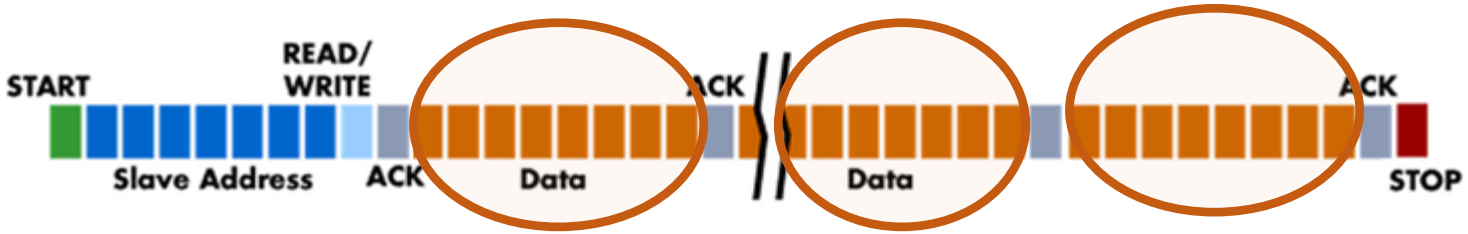

I2c Protocol

The I2c Data Transfers.

- For every byte transferred, the device Recieving data sends back an ACK bit .

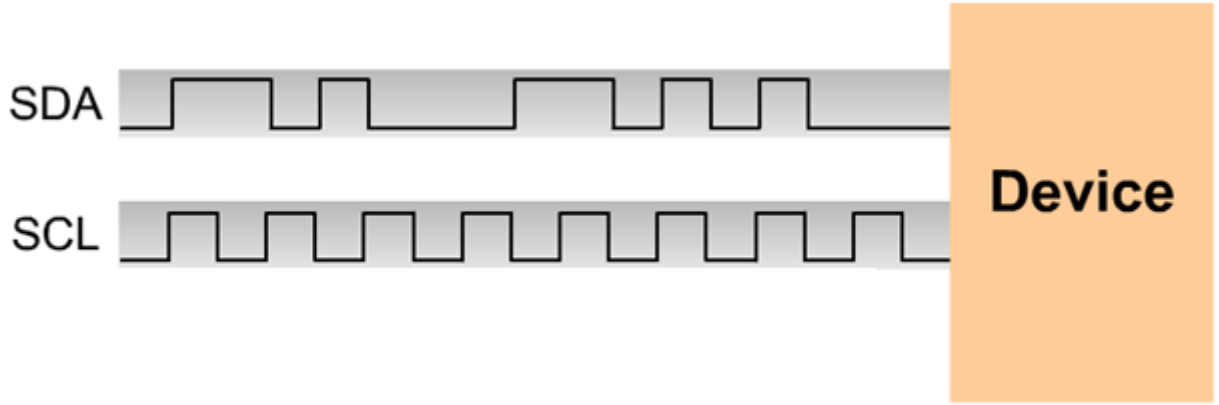

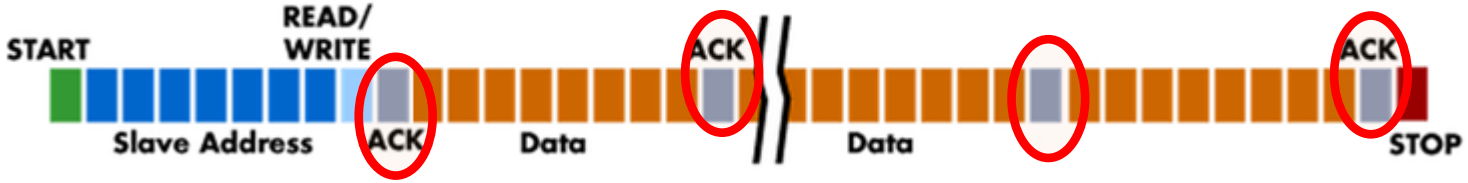

I2c Protocol

The I2c Data Transfers.

- When there is no more data to transfer then the Master send the Stop bit.

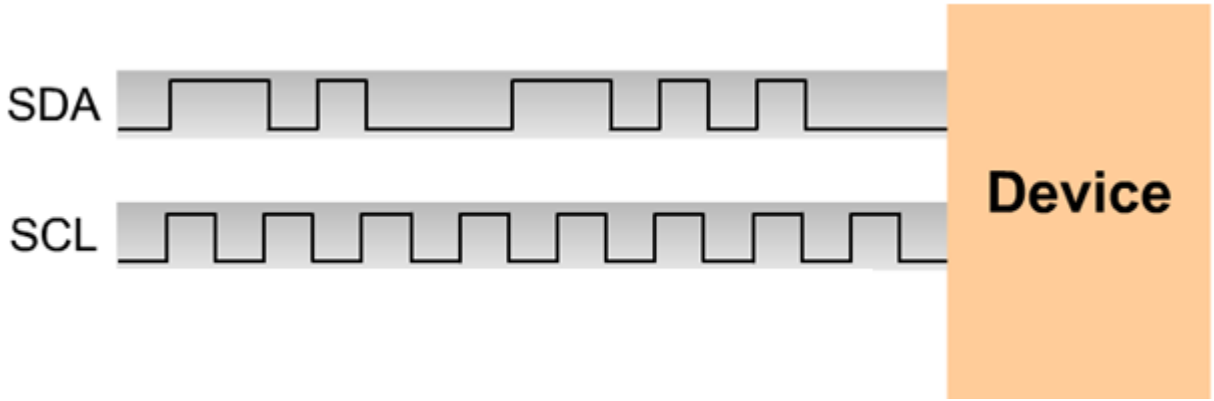

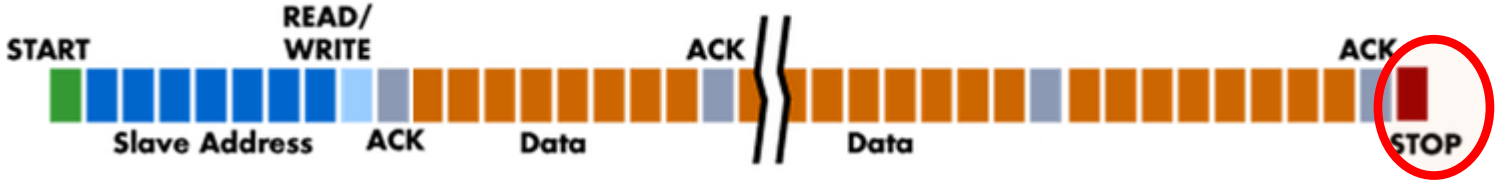

I2c Protocol

- If the recieiving device sends back a a low acknowledg Bit then its means that data Is recieved by the slave and is Ready to recive the next byte.

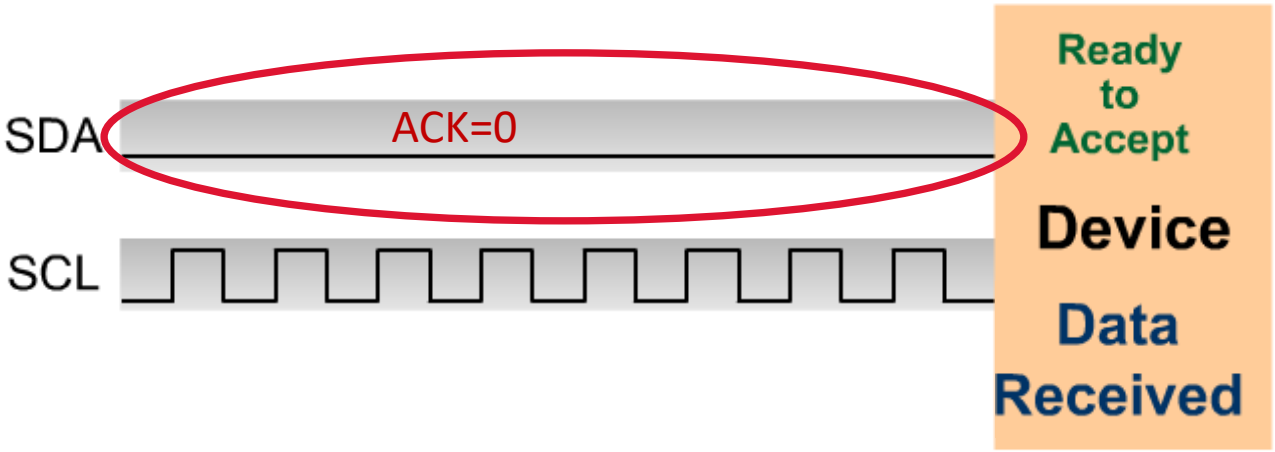

I2c Protocol

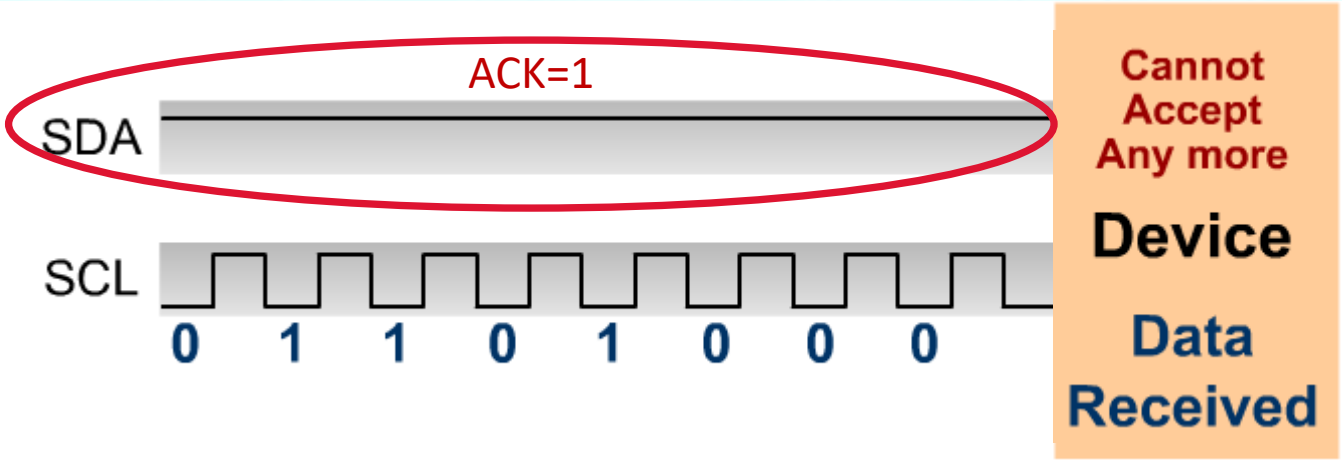

- If the recieiving device Sends back a a high acknowledg Bit then its means that it can not Accept the data

- Then the master terminates the transfer with the stop sequence.

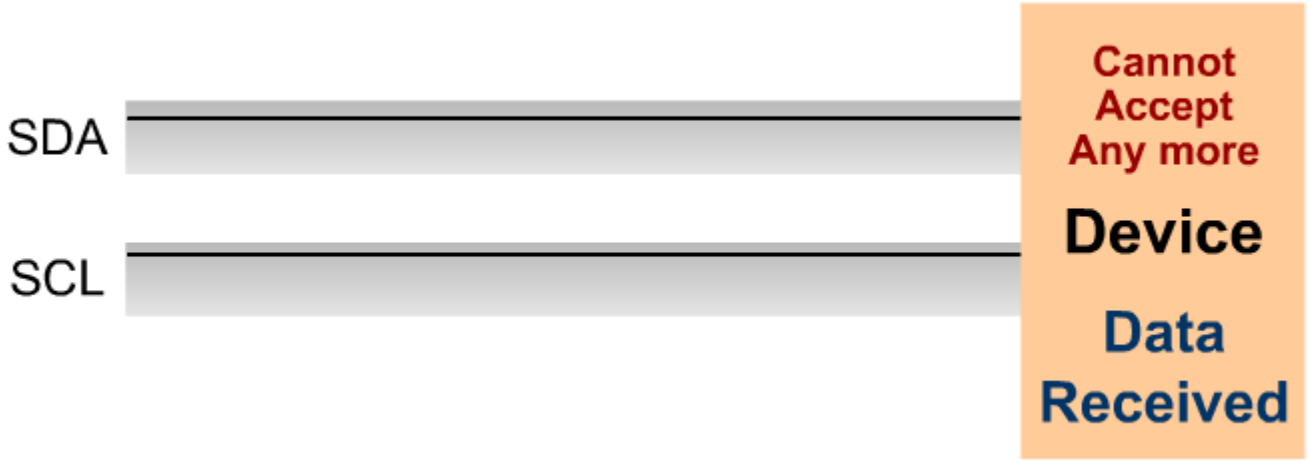

I2c Protocol

There are two distinct modes for any device on the bus.

Modes of Operaton

- The I2c Master Transmit
- The I2c Master Recieve

I2c Protocol

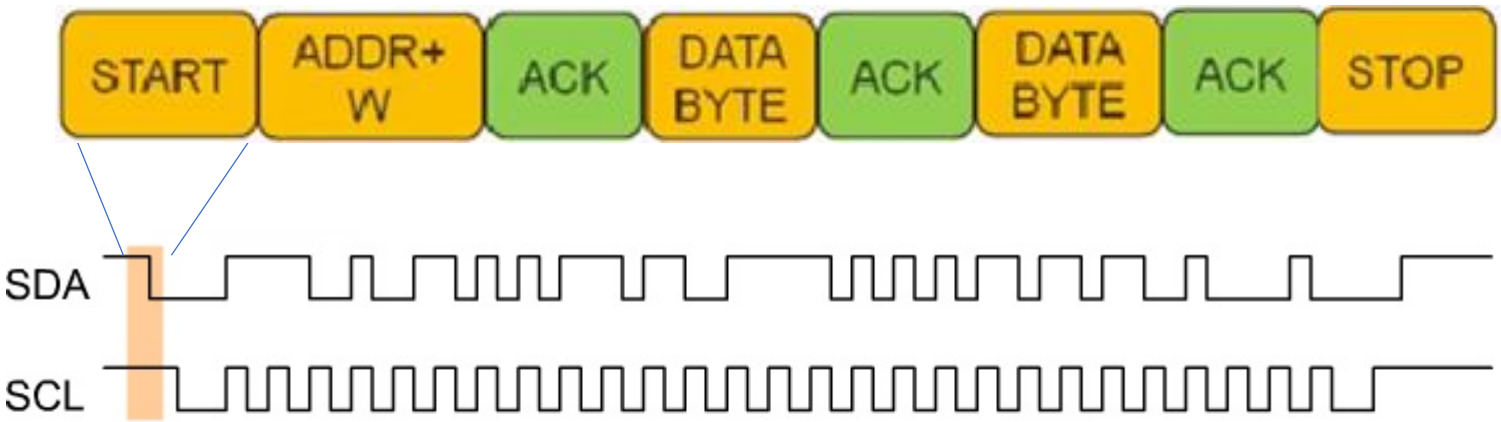

The I2c Master Transmit

- In this mode, the master is in control of the clock and is sending data to the slave.

- Seen on right side is an example of a timing diagram for a master transmit.

- The data transfer beigns with the START sequence

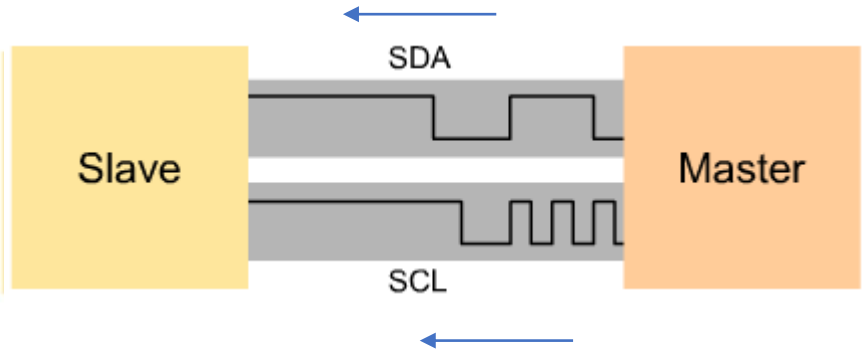

I2c Protocol

The I2c Master Transmit

- followed by the 7-bit addres, which is read on every low clock pulse.

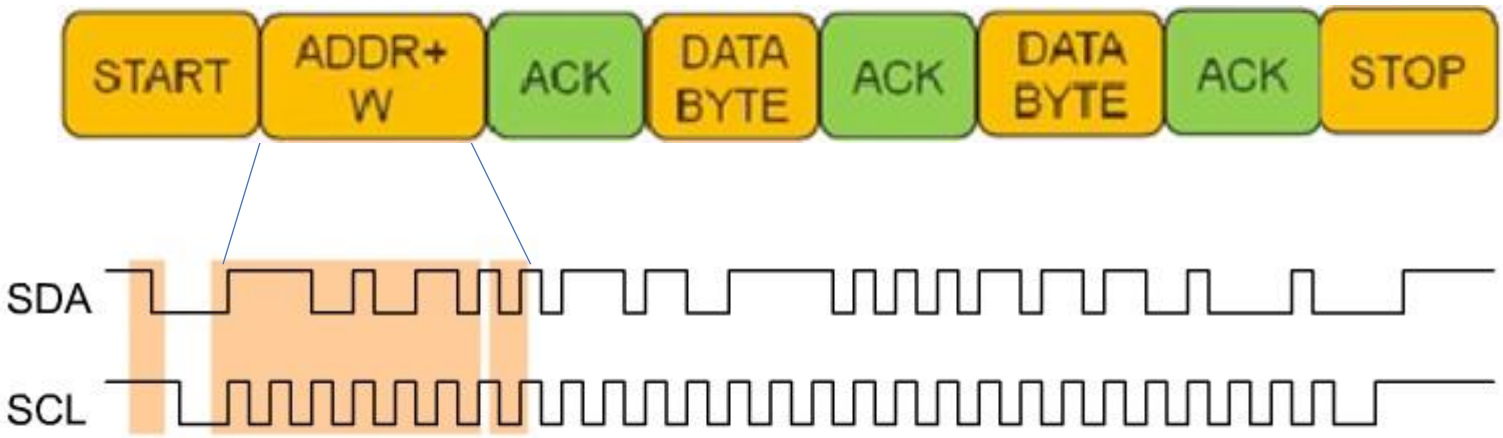

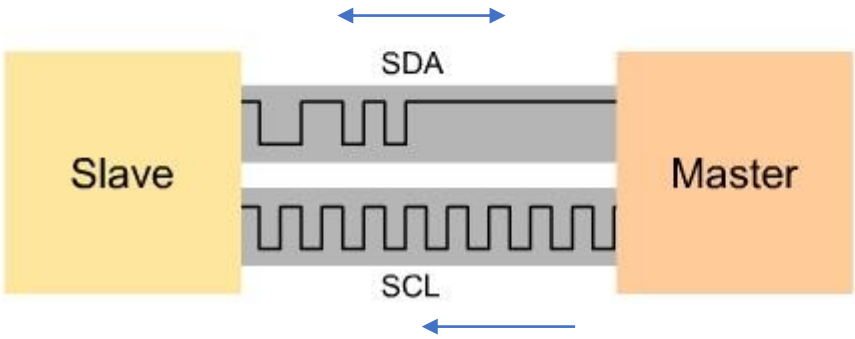

I2c Protocol

The I2c Master Transmit

- Slave sends an ACK bit to tell the master that it is its address and he is ready to recieve the data.

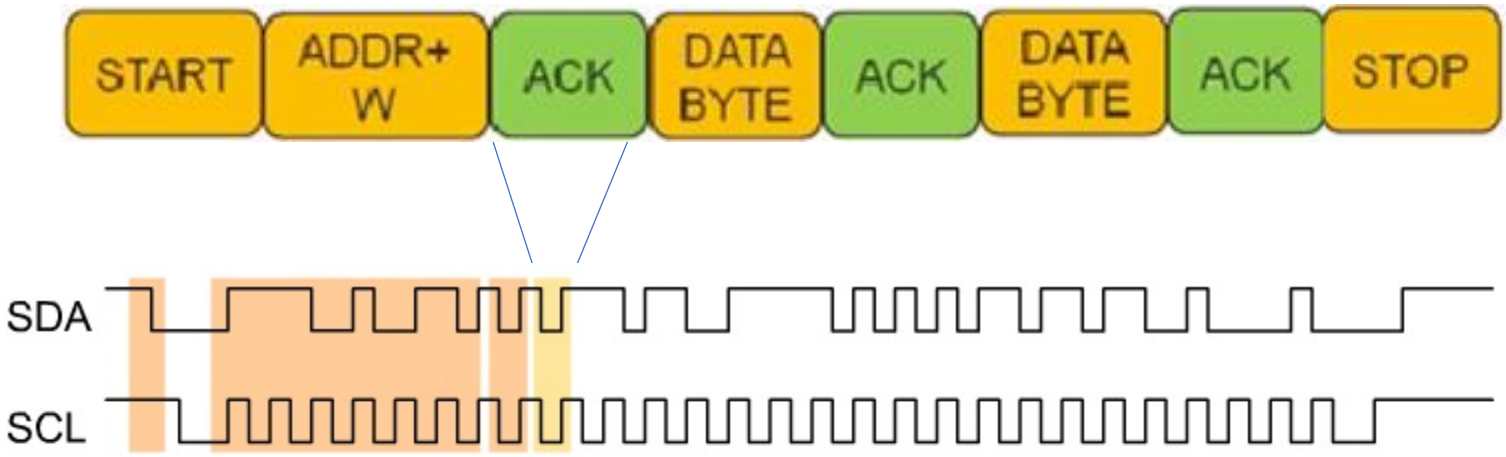

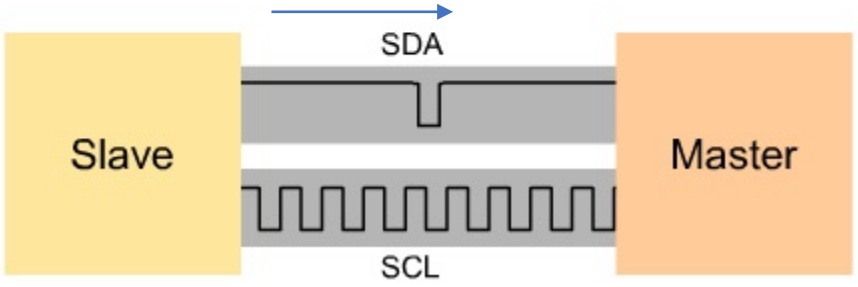

I2c Protocol

The I2c Master Transmit

- After the slave sends an ACK bit, the master tranmits the first byte of data to the slave.

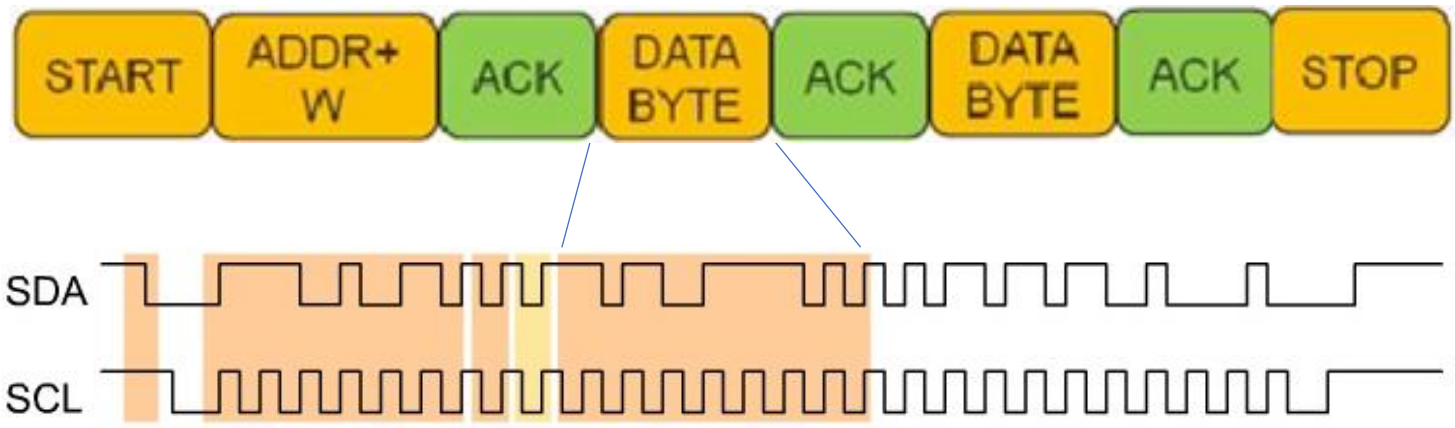

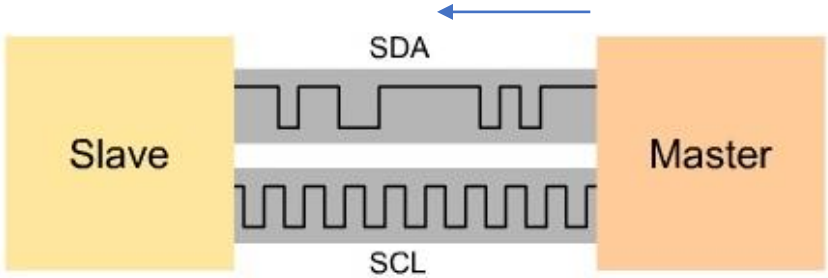

I2c Protocol

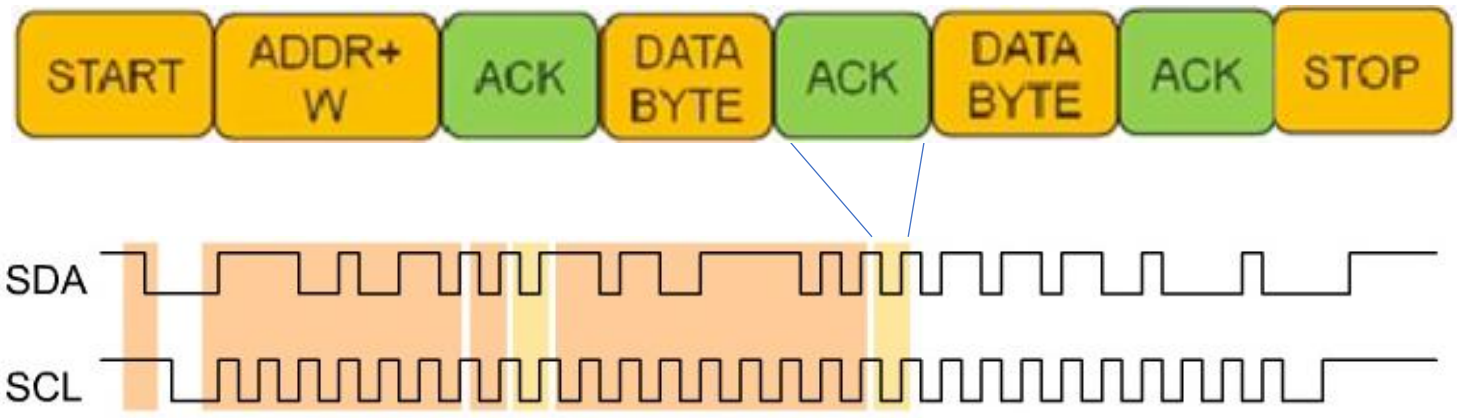

The I2c Master Transmit

- After the slave reads from the SDA line, it sends back another ACK bit .

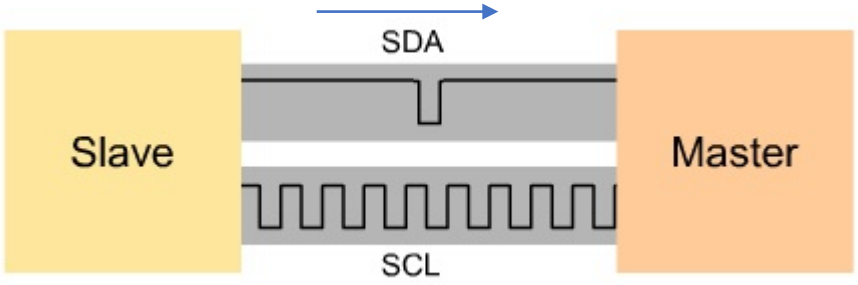

I2c Protocol

The I2c Master Transmit

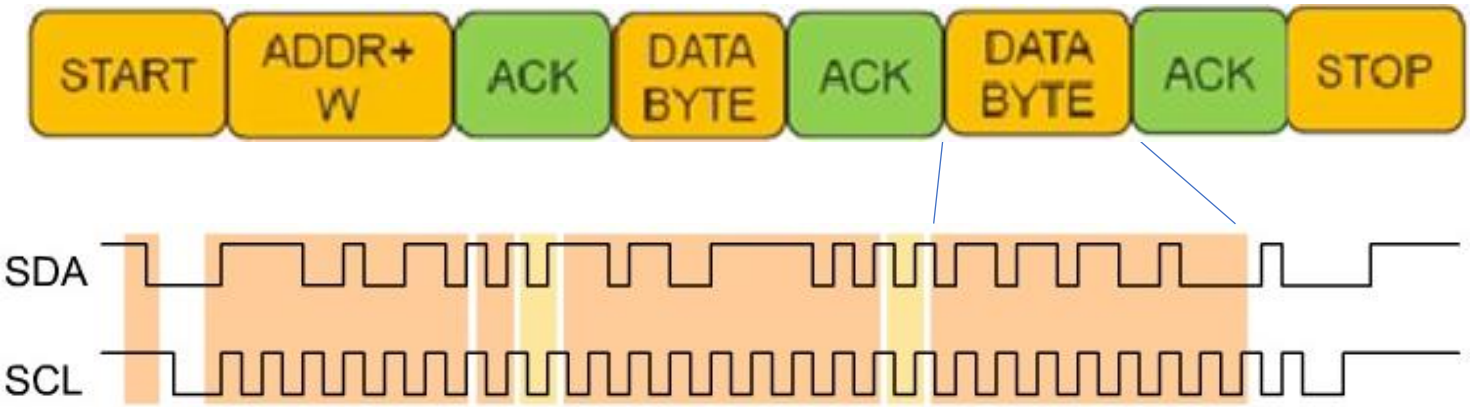

After the last byte is sent,

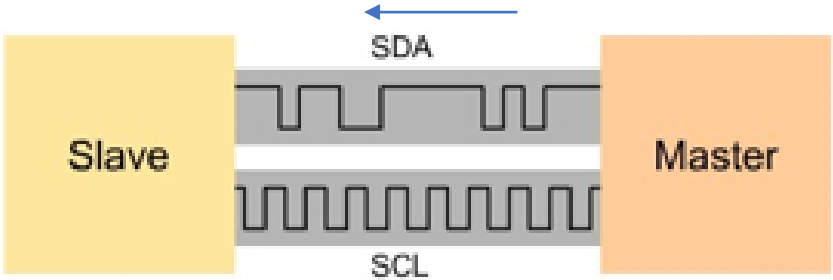

I2c Protocol

- The slave sends a high ACK bit signaling it cannot Rad any more data

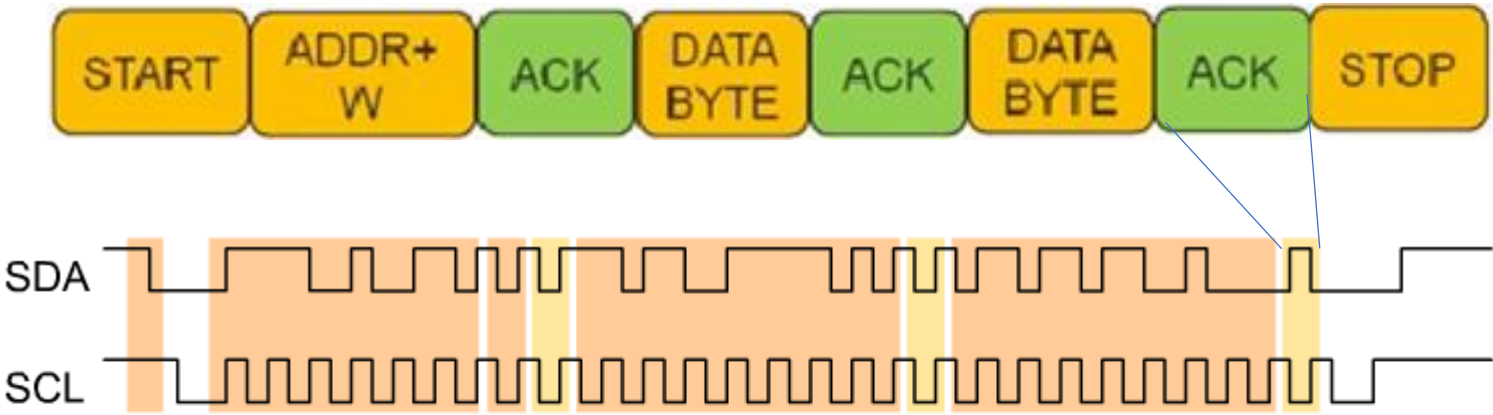

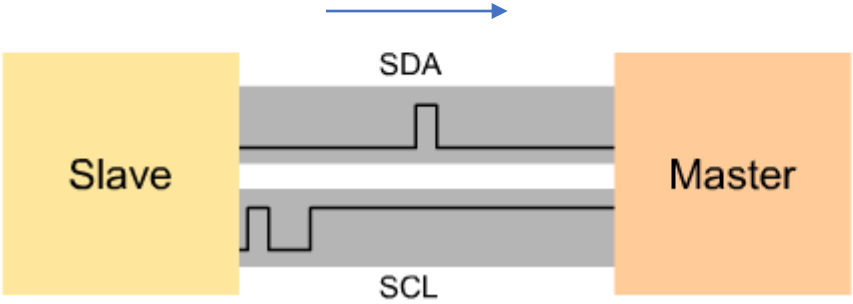

I2c Protocol

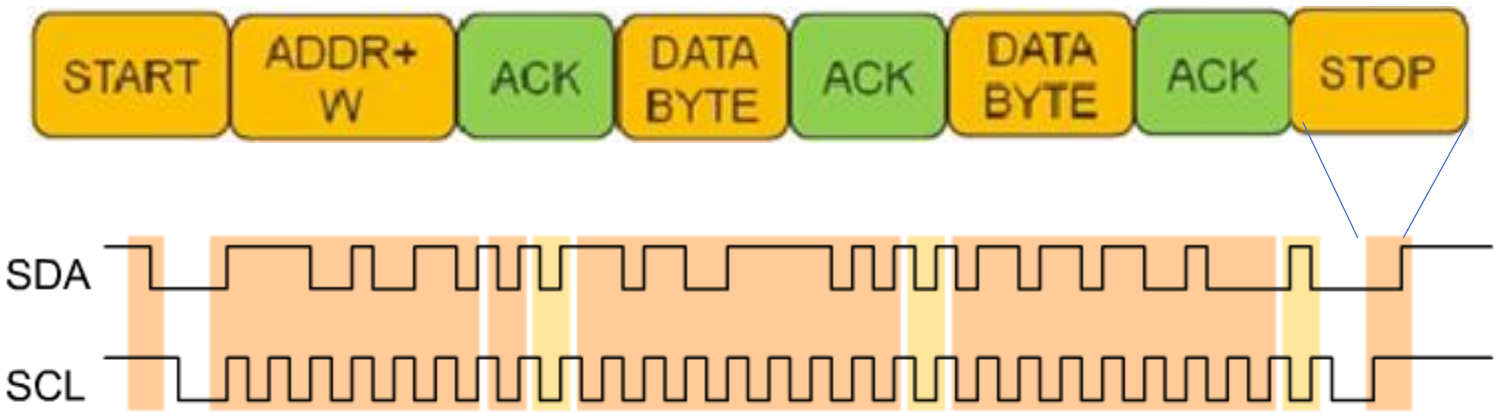

- The master then pulls the SCL line and SDA line high, signaling as STOP seqeuence.

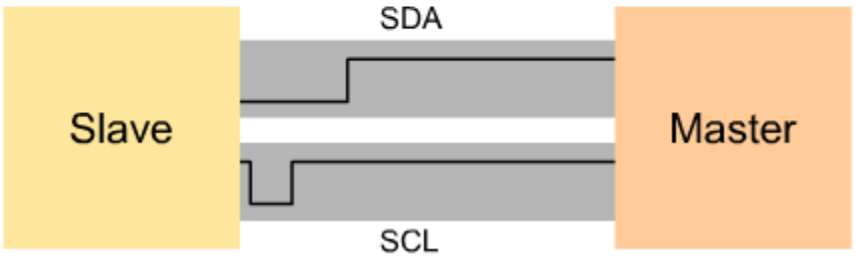

I2c Protocol

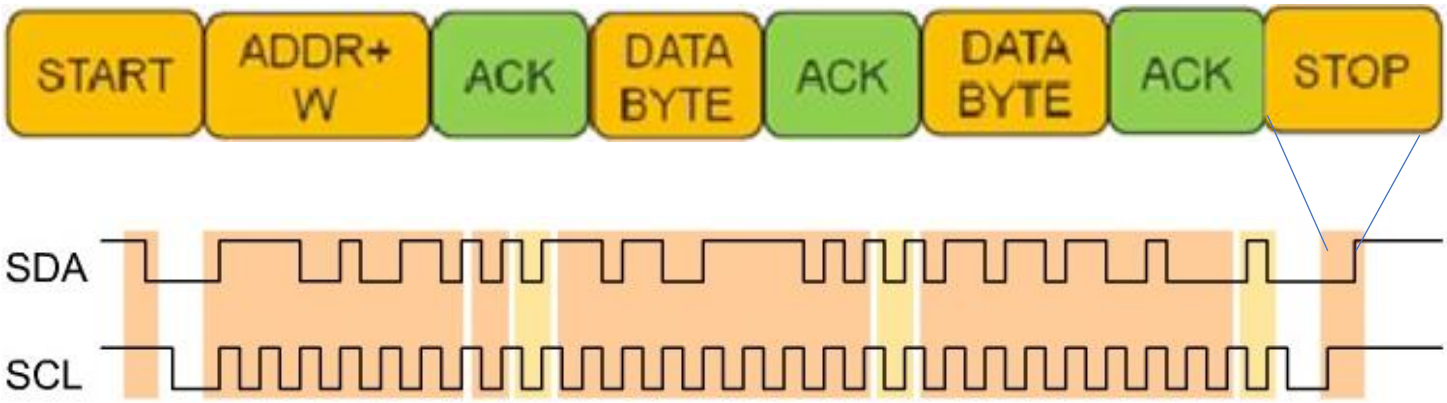

- When both SDA and SCL lines are pulled high by the master then the transmission is stopped.

I2c Protocol

The I2c Master Recieve

I2c Protocol

The I2c Master Recieve

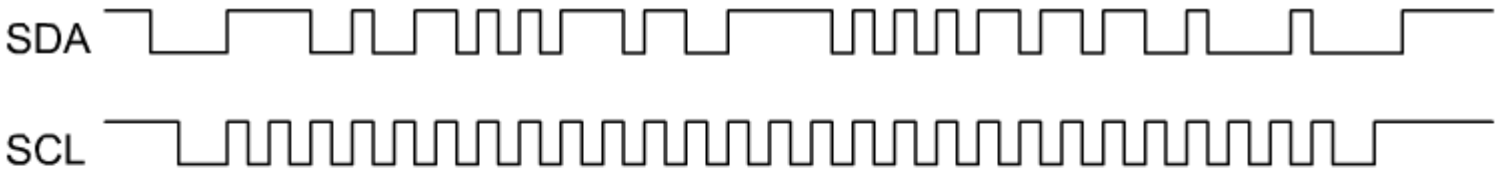

- In this mode the master is in control of the clock and is receiving data from the salve.
- Seen on the right side is another timing diagram is an example for a master receive.
- Like master transmit., the procedures are essentially identical, except insted of the slave sending back ACK bits after every data byte is tranmitted, the master sends it.

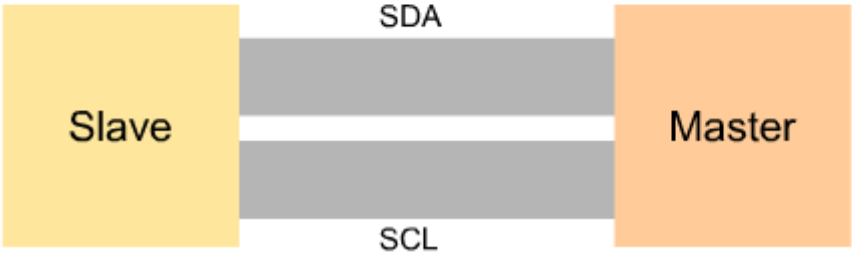

I2c Protocol

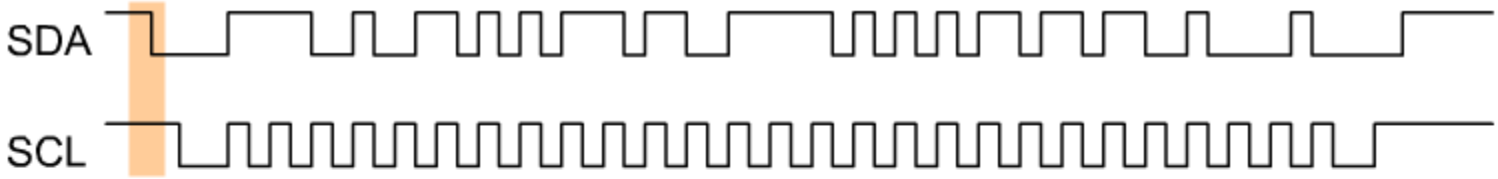

The I2c Master Recieve

- The master pulls the SDA line low to start the communication.

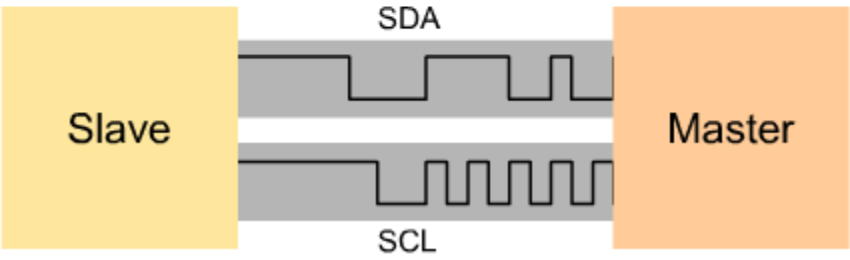

I2c Protocol

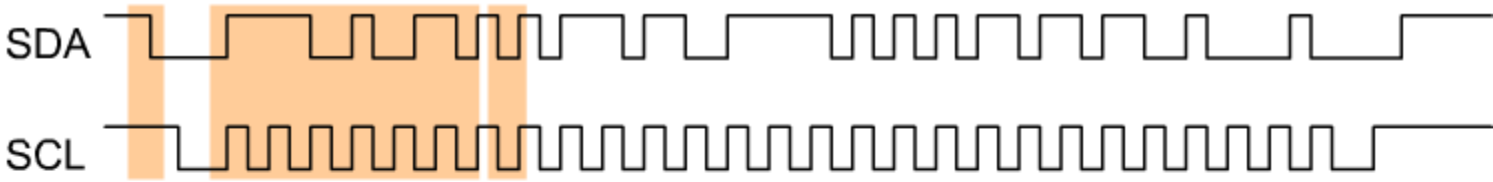

The I2c Master Recieve

- Then the master sends the address of the slave with Read/Write bit high to inidicate that it wants to read something from slave device.

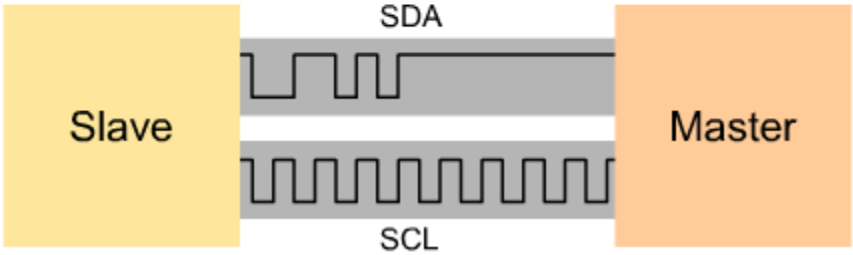

I2c Protocol

The I2c Master Recieve

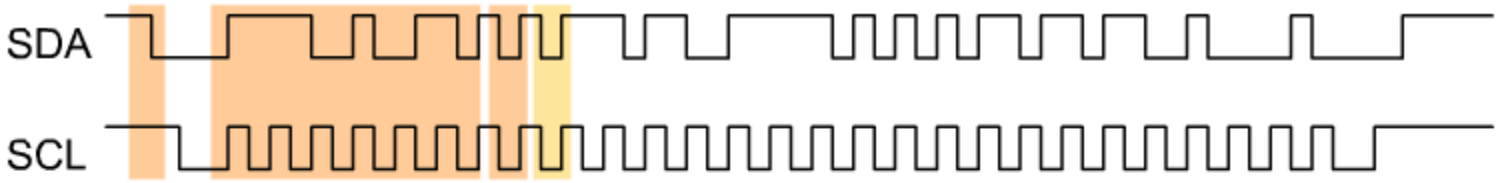

- The slave Acknowledges with low bit.
- The only time the slave sends an ACK bit in His mode is when the slave receives the data for the address.

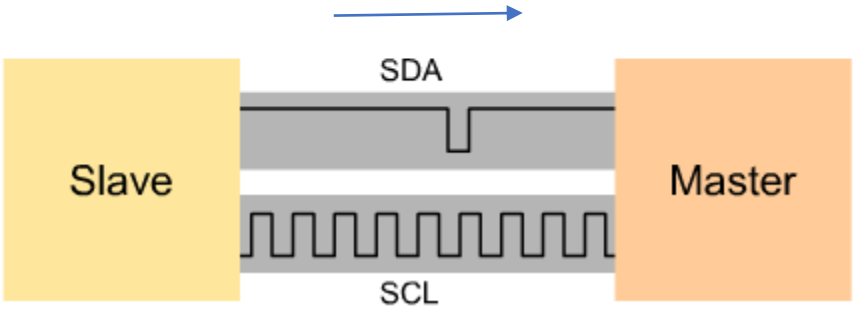

I2c Protocol

The I2c Master Recieve

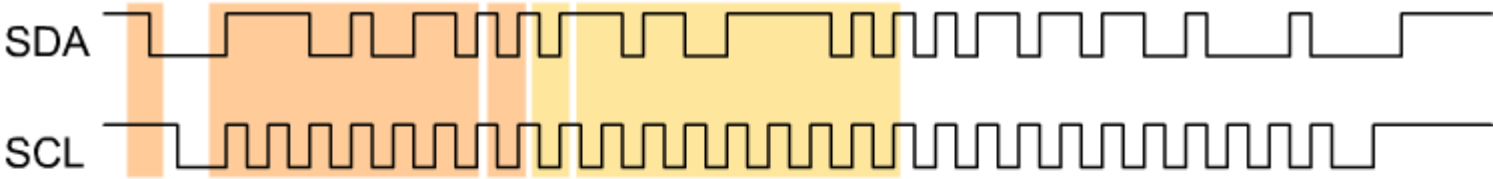

- Then slave starts transmitting the data which is requested by Master.

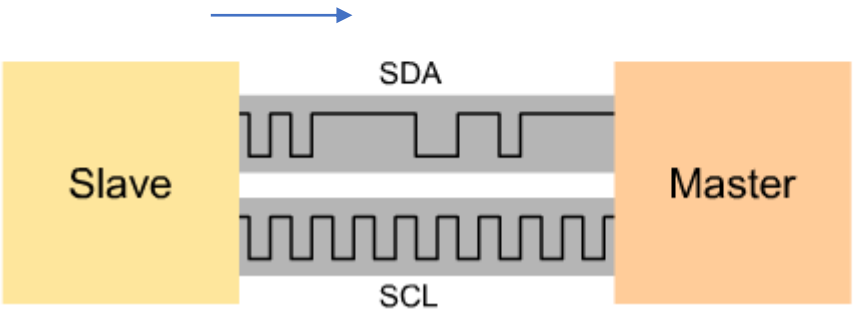

I2c Protocol

The I2c Master Recieve

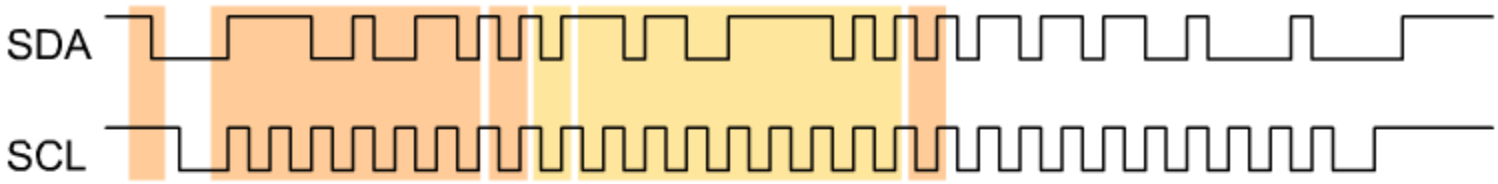

- After recieving each byte Master sends a low ACK to the slave.

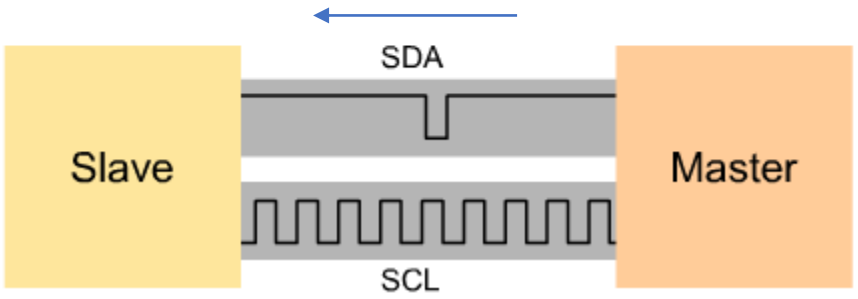

I2c Protocol

The I2c Master Recieve

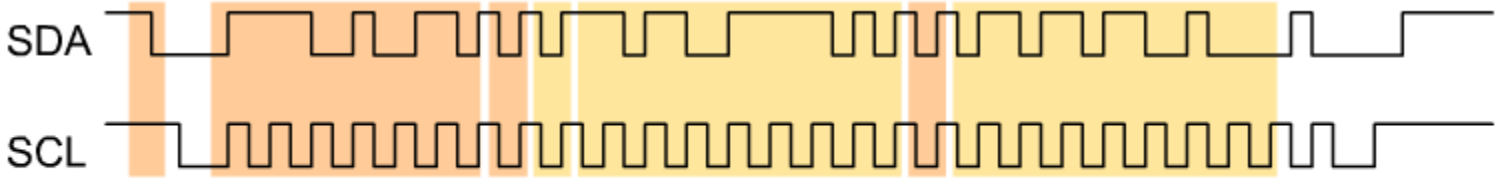

- The slave keeps sending the data until the last byte of the requested data .

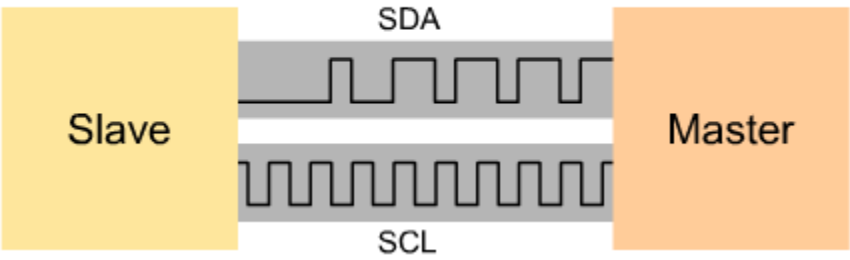

I2c Protocol

The I2c Master Recieve

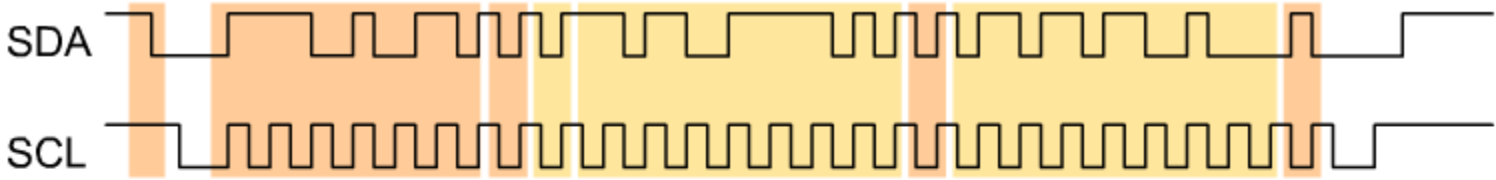

- In the end when the bytes are finished Master sends a high ACK to tell the slave it got the desired number of bytes so now stop the communication.

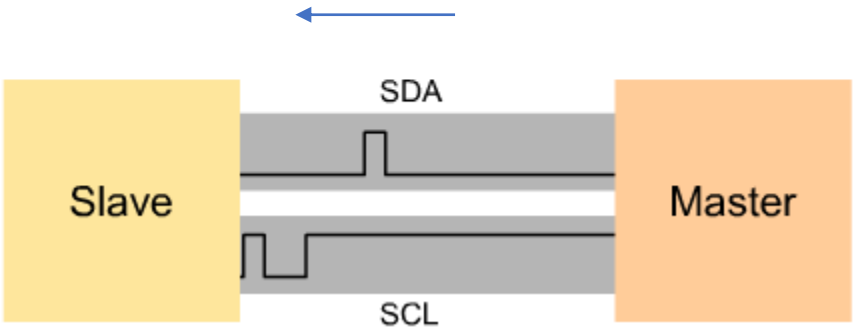

I2c Protocol

The I2c Master Recieve

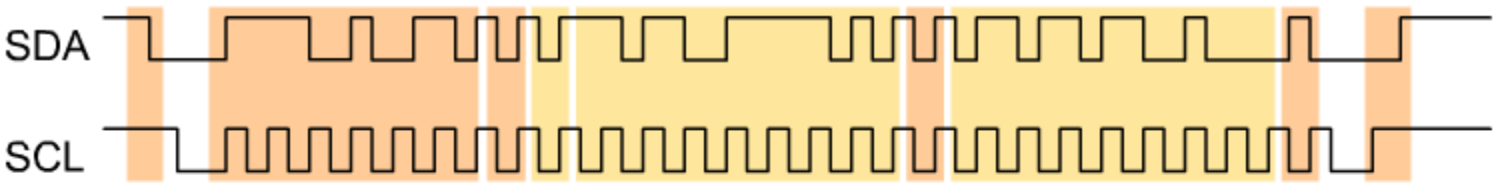

- Then the master pulls the SLC and SDA line high to leave the bus to free or Idle state.

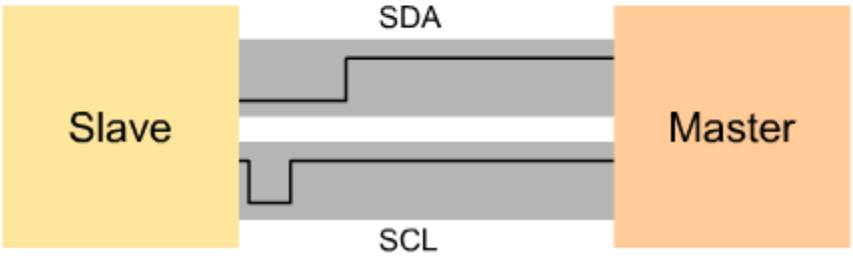

I2c Protocol

- Now anyone who want to communicate, can do it as bus is set free by the last Master.

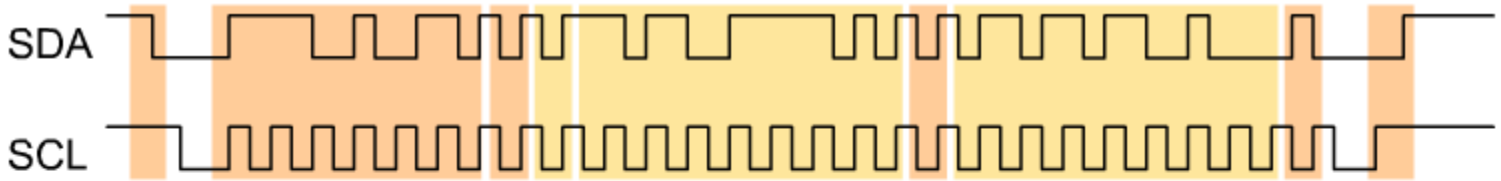

I2c Protocol

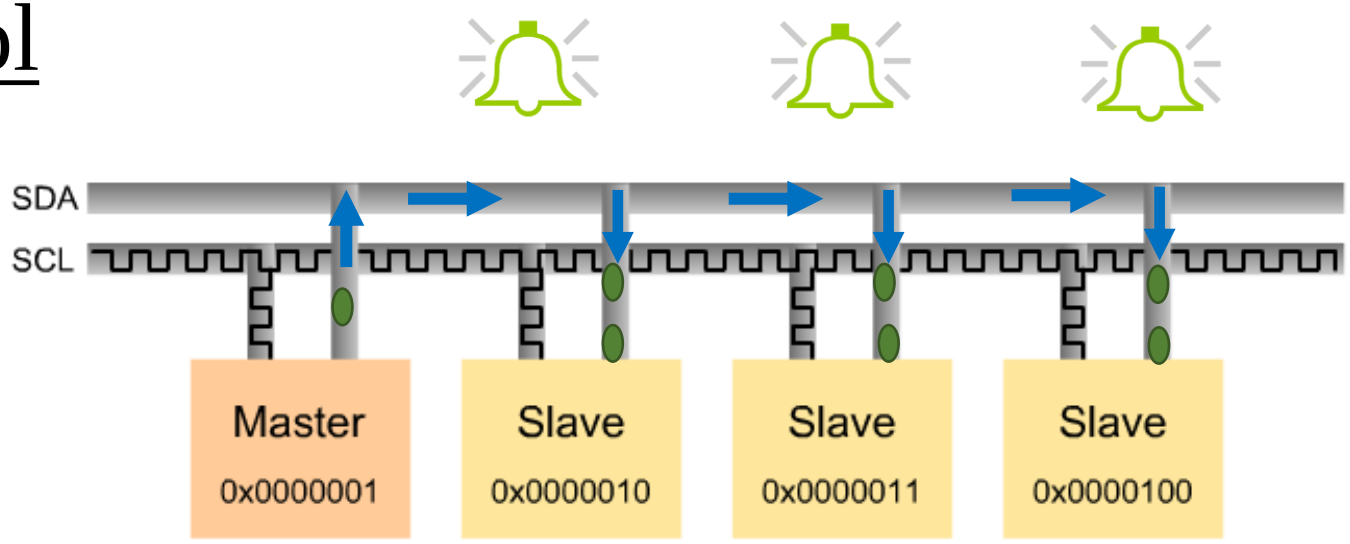

- First , the START sequence is sent by the master to alld devices on the bus.

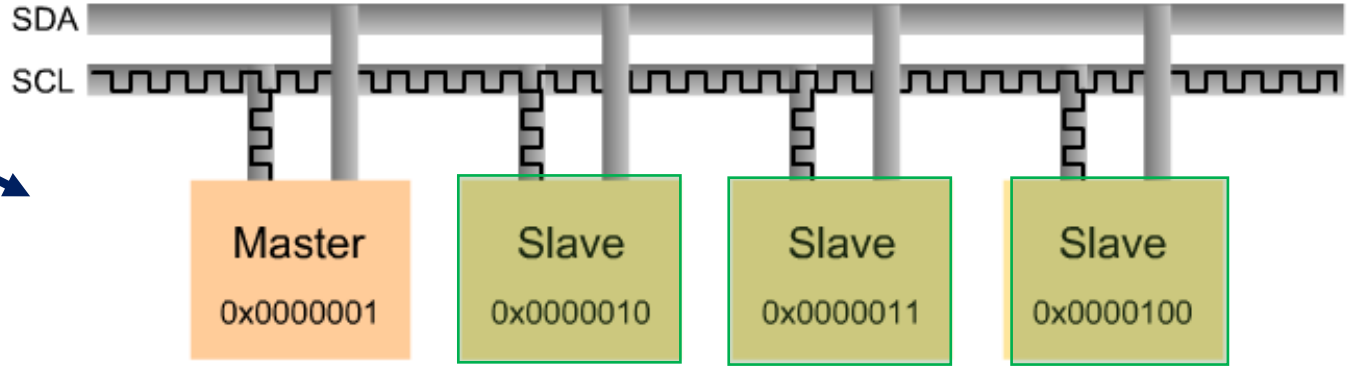

- This start sequence alerts all the devices on the I2C network that a transmision is going to happen.

I2c Protocol

- The master device thenSends an Address of the devie it wants to access, along with a rad or write operation.

- All slave deices will compareThis address with their own To see if there is a match.

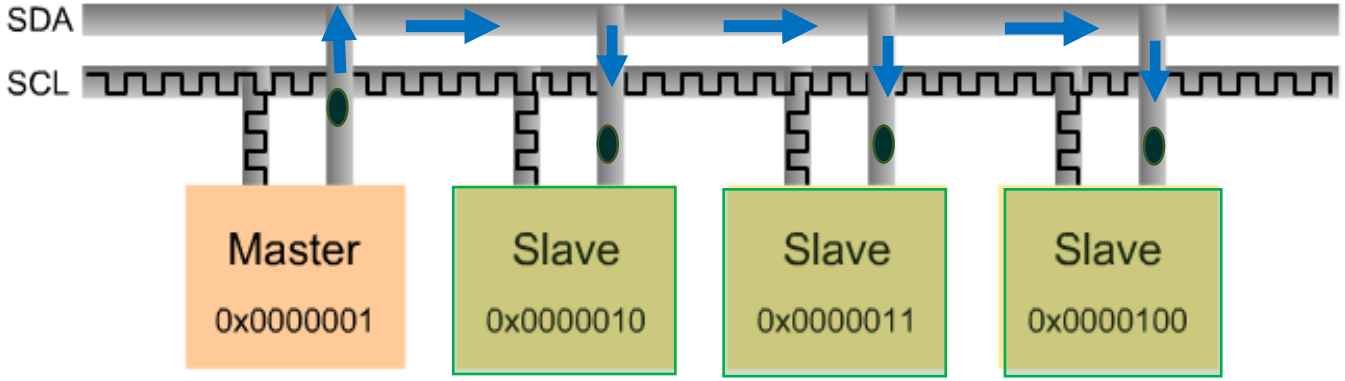

I2c Protocol

- If there is any slave with the same address as sent by the master , the slave will then produce An ACK signal.

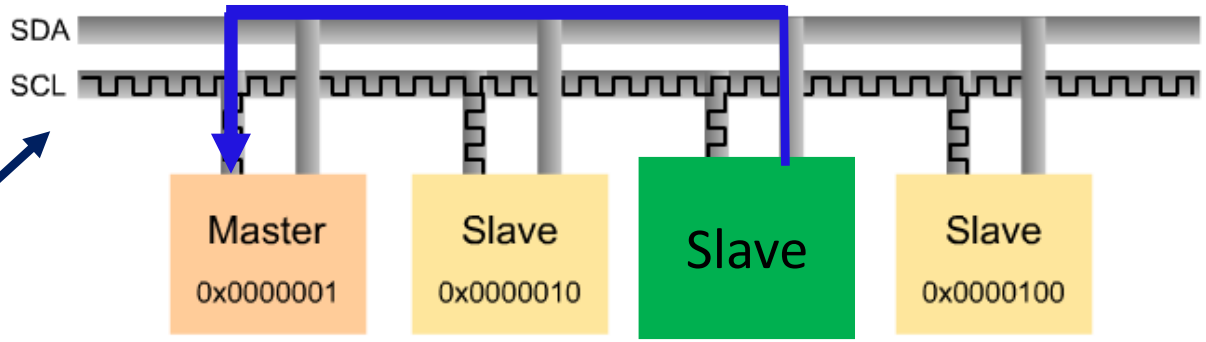

- Slaves that do not match the address simply wit until the bus is released by the STOP sequence.

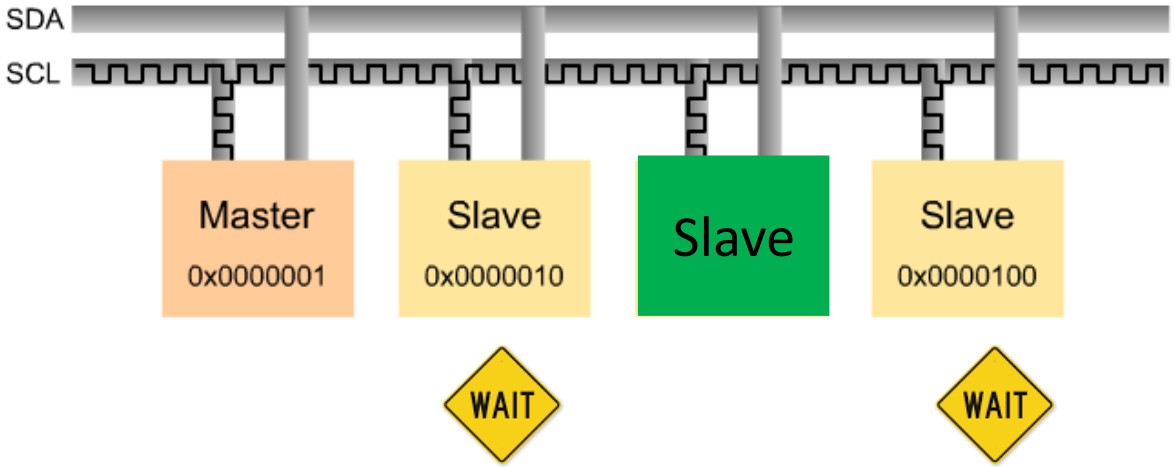

I2c Protocol

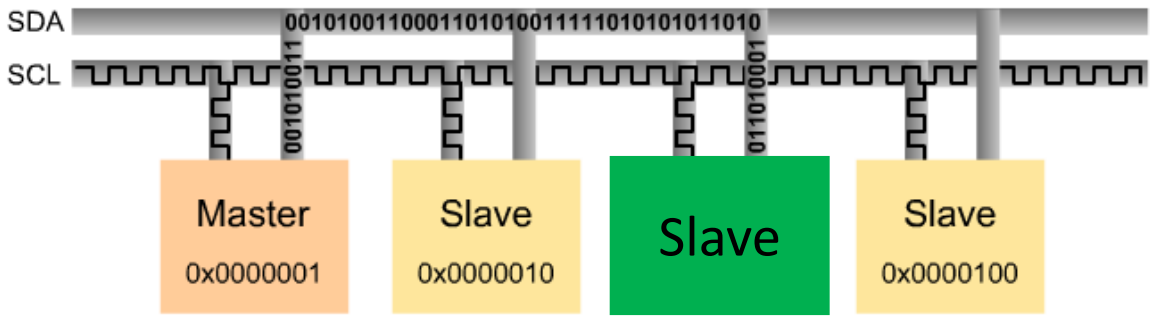

- Once the master receives the ACK SIGNAL:
  It starts transmitting or receiving data.

- When all is done, the master will issue a STOP condition

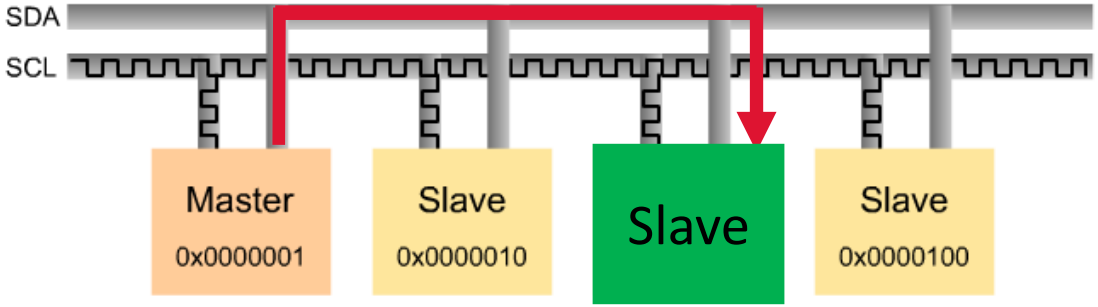

I2c Protocol

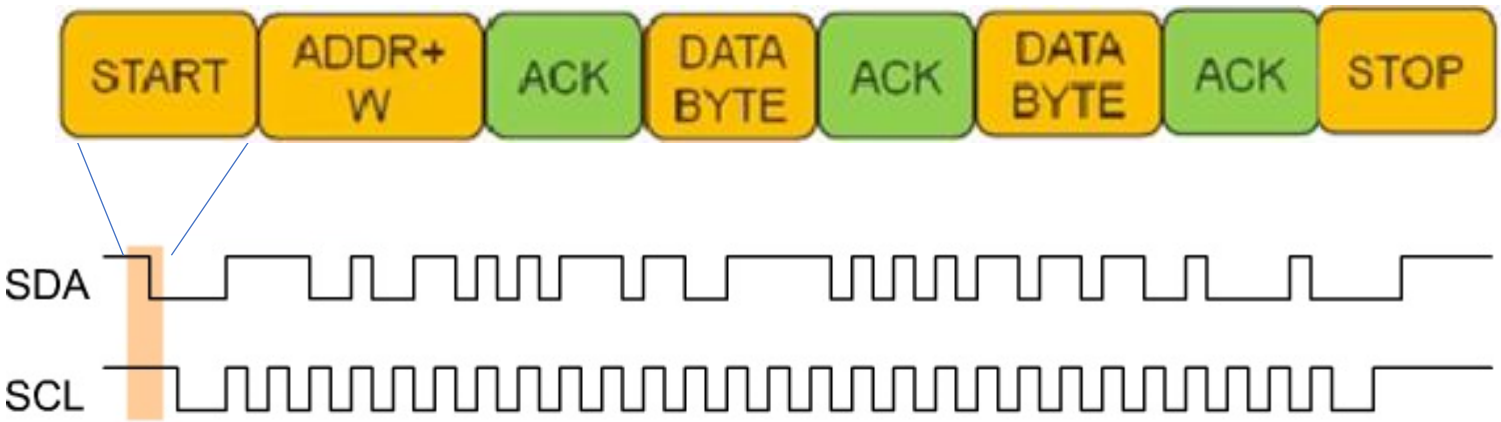

The I2c Master Transmit

- In this mode, the master is in control of the clock and is sending data to the slave.

- Seen on right side is an example of a timing diagram for a master transmit.

- The data transfer beigns with the START sequence

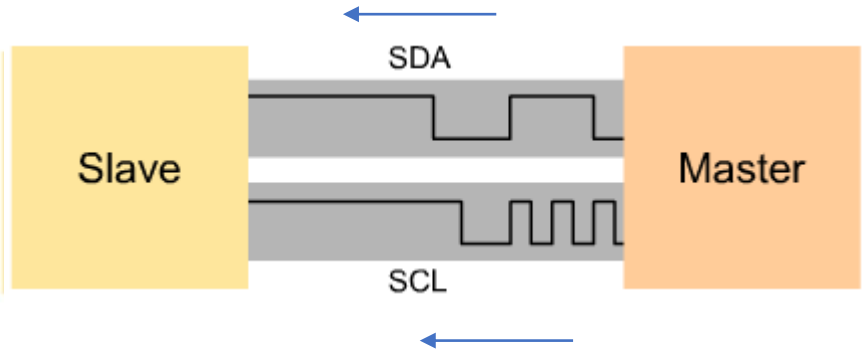

I2c Protocol

The I2c Master Transmit

- followed by the 7-bit addres, which is read on every low clock pulse.

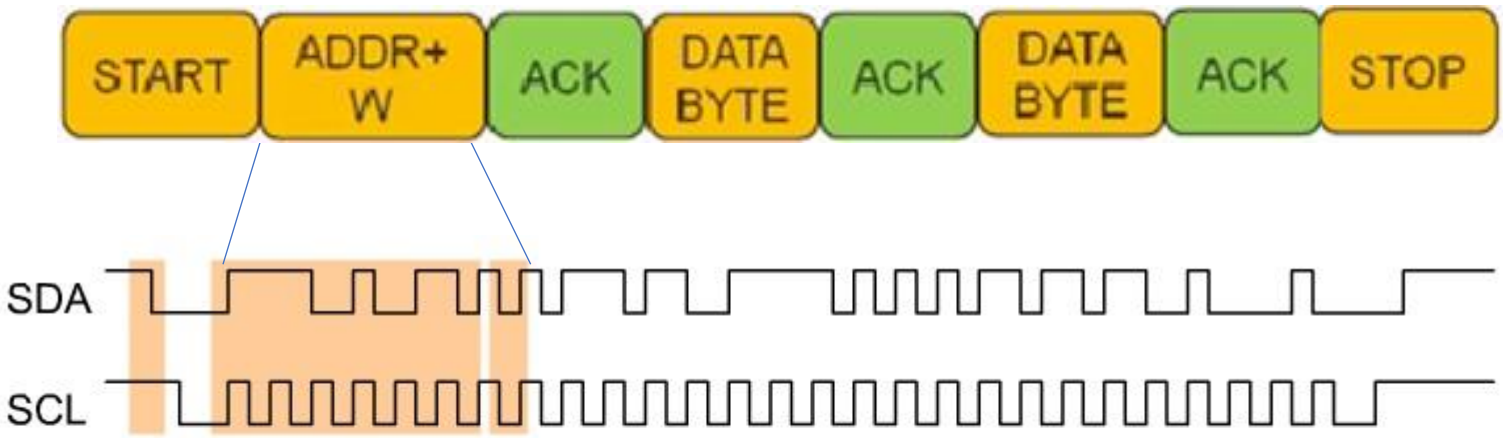

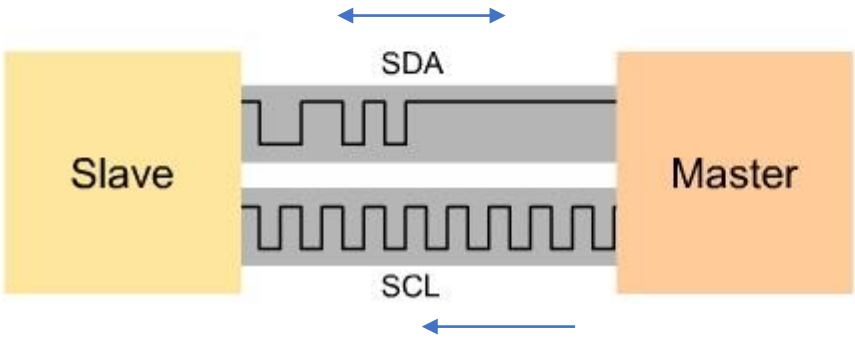

I2c Protocol

The I2c Master Transmit

- Slave sends an ACK bit to tell the master that it is its address and he is ready to recieve the data.

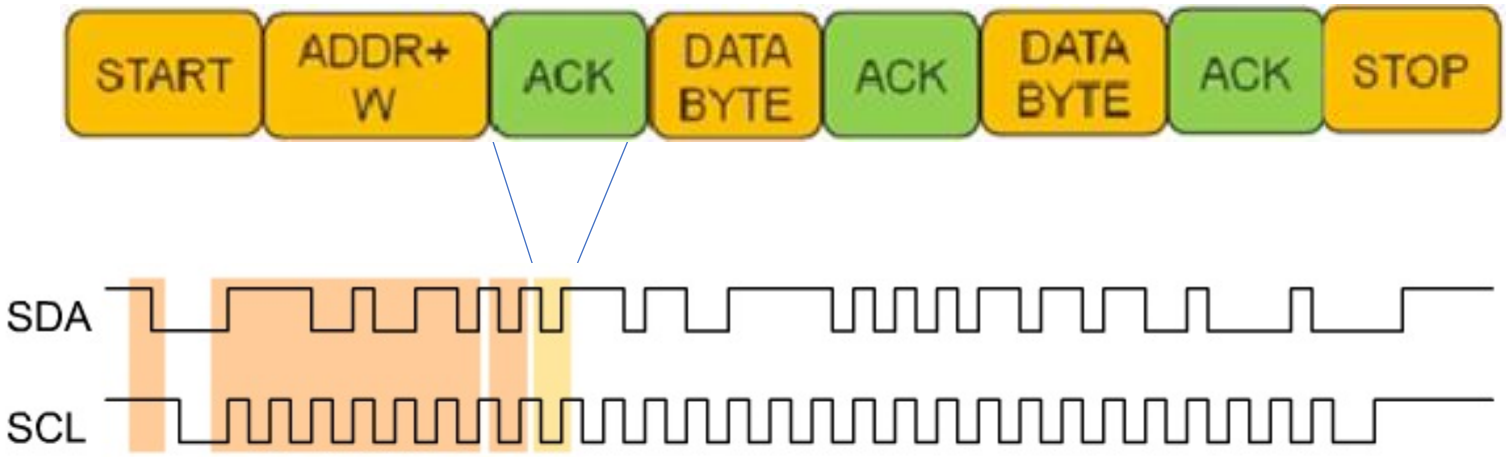

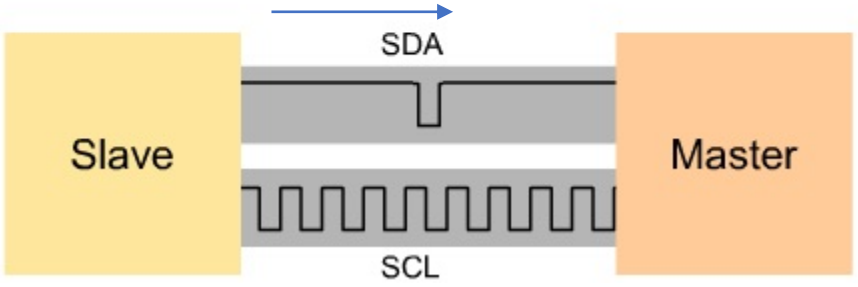

I2c Protocol

The I2c Master Transmit

- After the slave sends an ACK bit, the master tranmits the first byte of data to the slave.

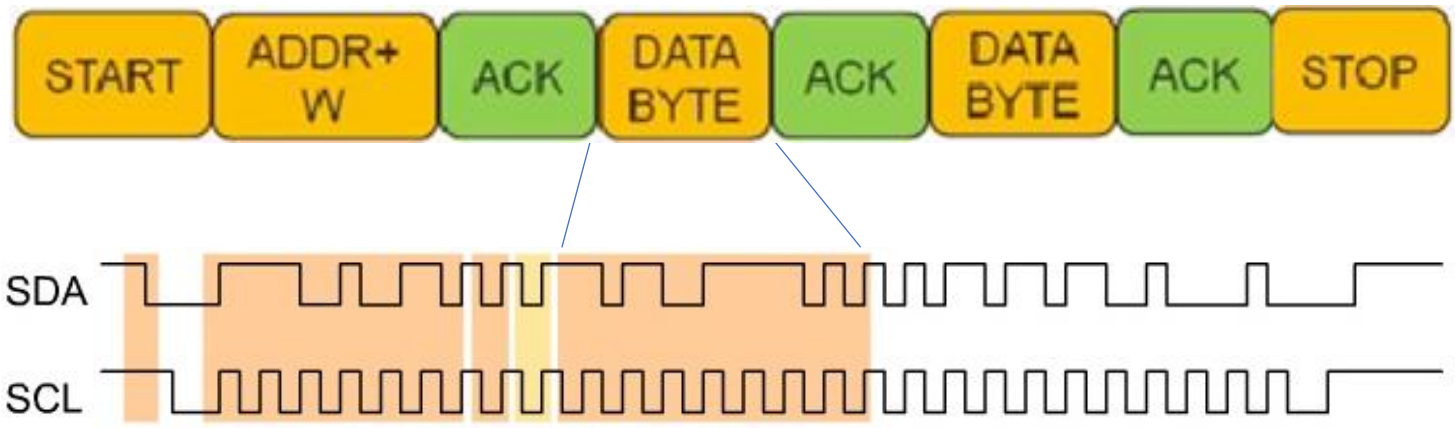

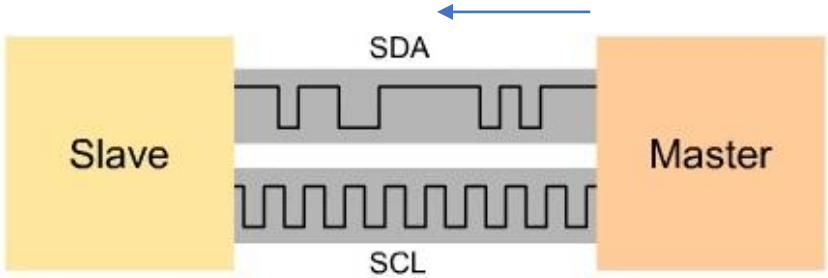

I2c Protocol

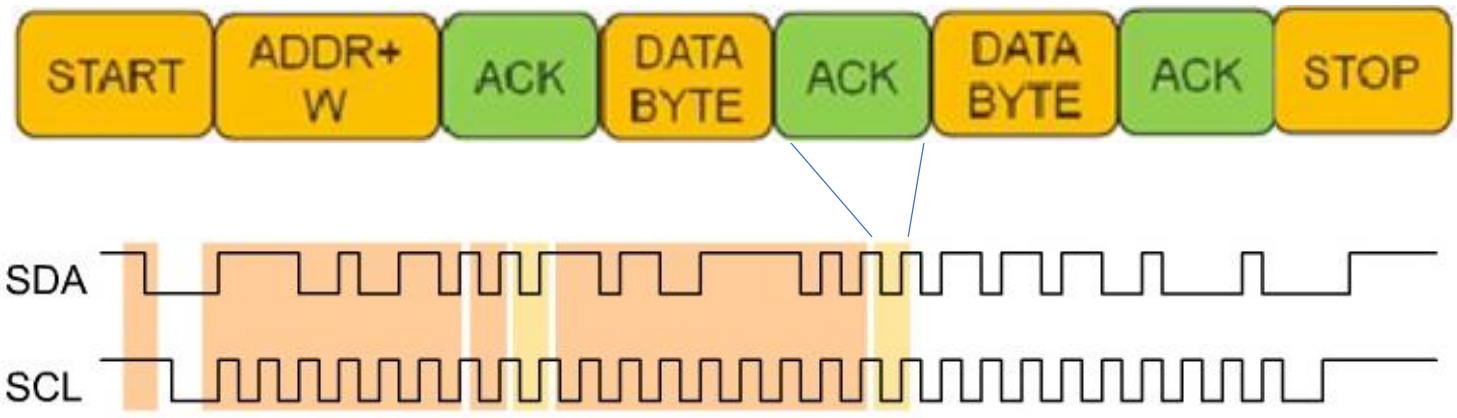

The I2c Master Transmit

- After the slave reads from the SDA line, it sends back another ACK bit .

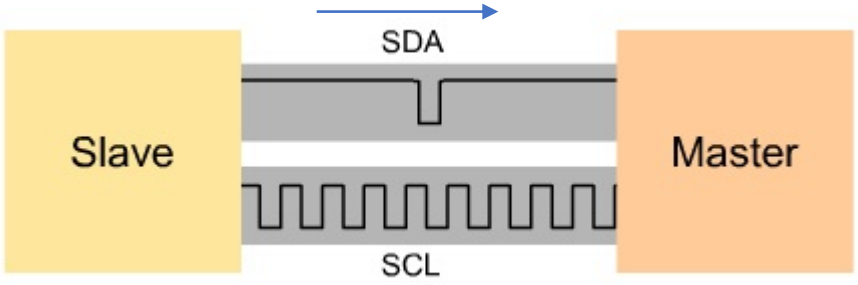

I2c Protocol

The I2c Master Transmit

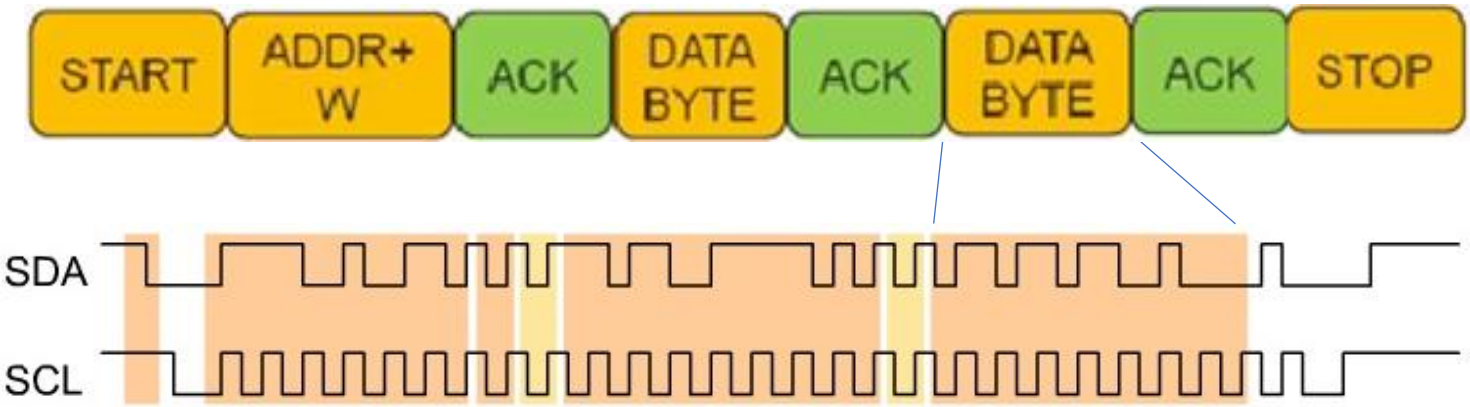

After the last byte is sent,

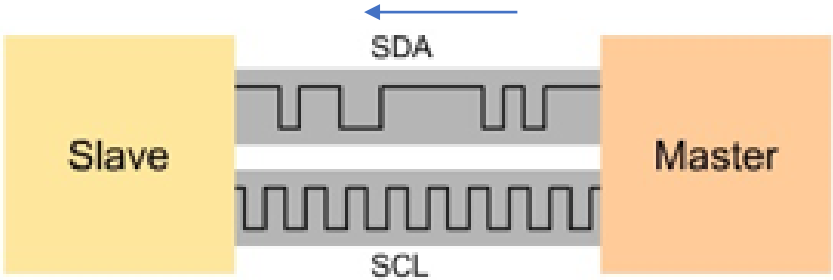

I2c Protocol

- The slave sends a high ACK bit signaling it cannot Rad any more data

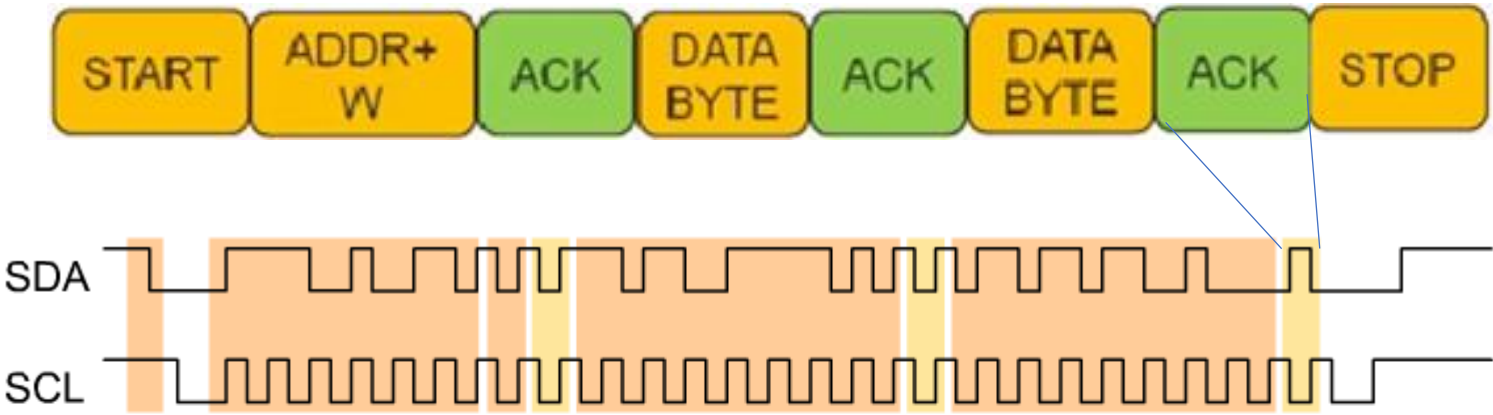

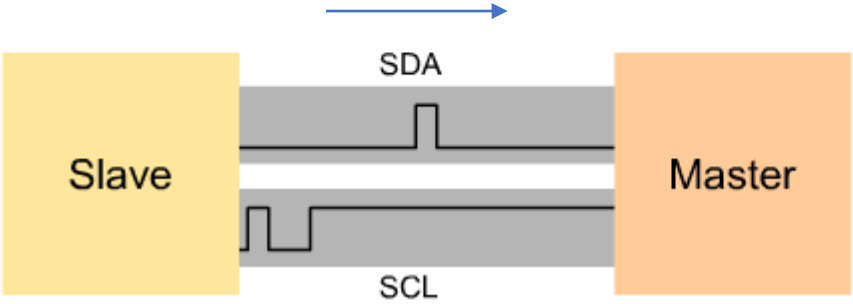

I2c Protocol

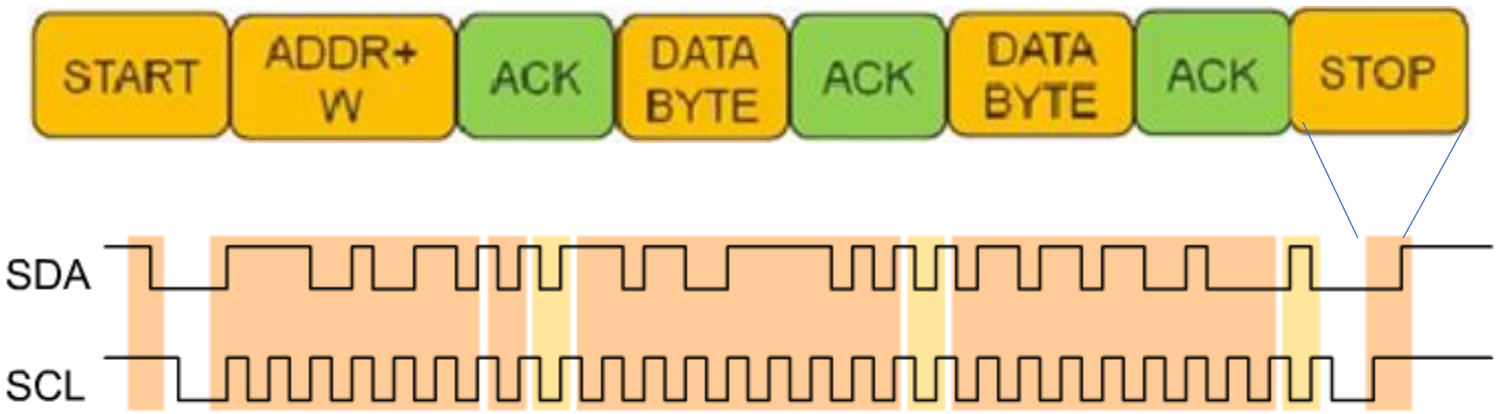

- The master then pulls the SCL line and SDA line high, signaling as STOP seqeuence.

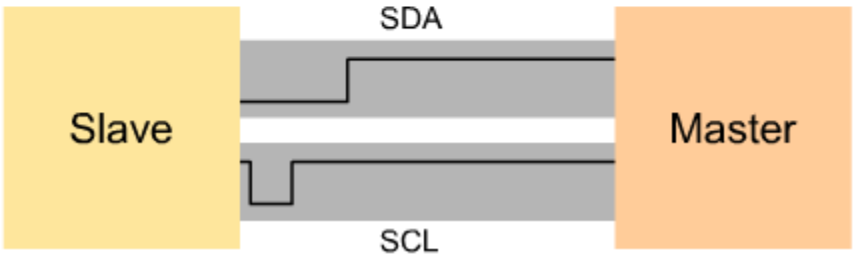

I2c Protocol

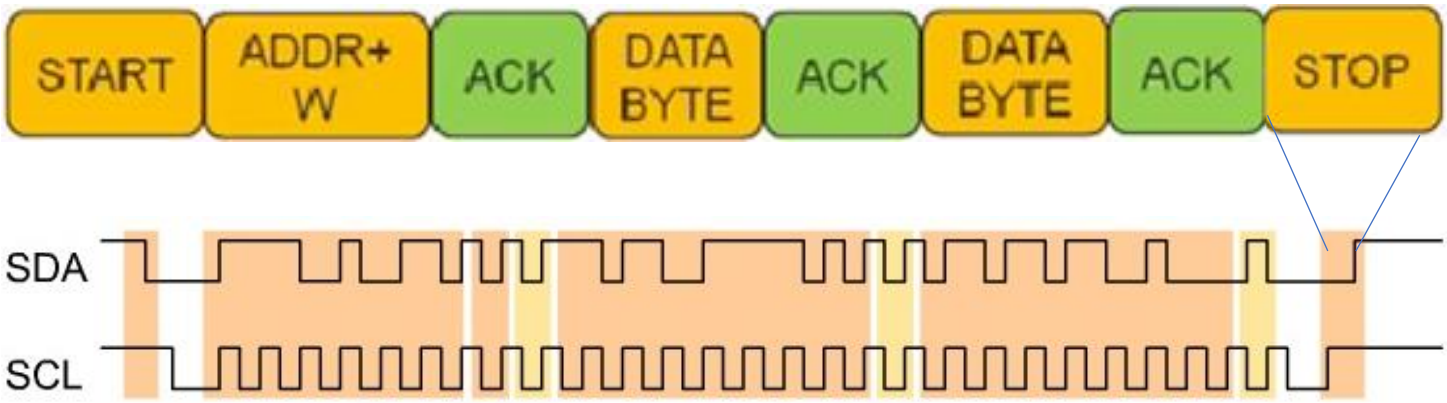

- When both SDA and SCL lines are pulled high by the master then the transmission is stopped.

I2c Protocol

- All the devices which have I2C capability must have an I2C chip .
- Each I2C chip has an address to Communicate .
- There are many registers in I2C chip and each register has its own address.

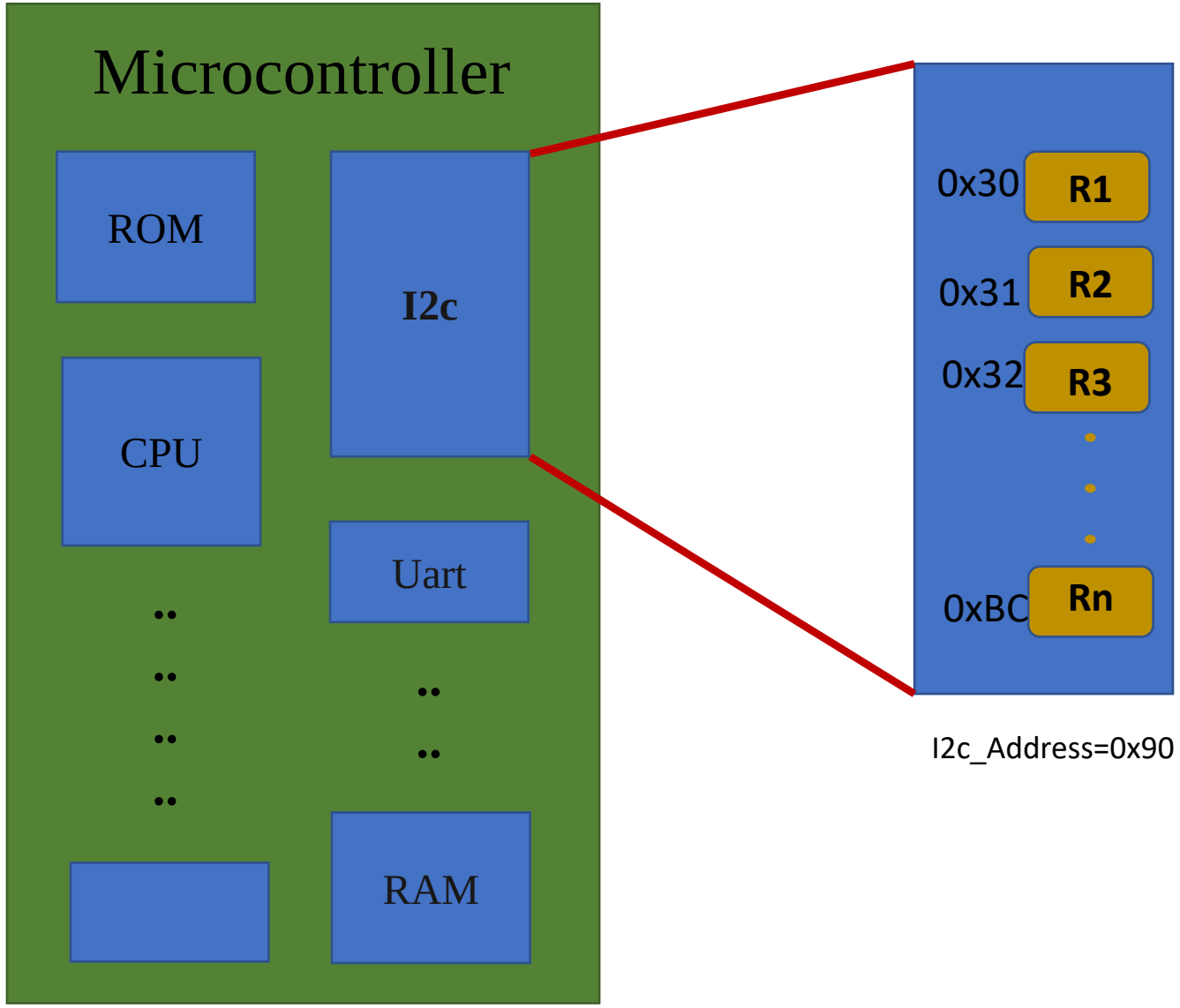

I2c Protocol

Implementation in Hardware and Software

I2c Protocol

- Whenever one I2C device want to communicate with other I2C device, It should first call the Device‘s I2C address and then the Address of the register where it want to write something or read something out of it.

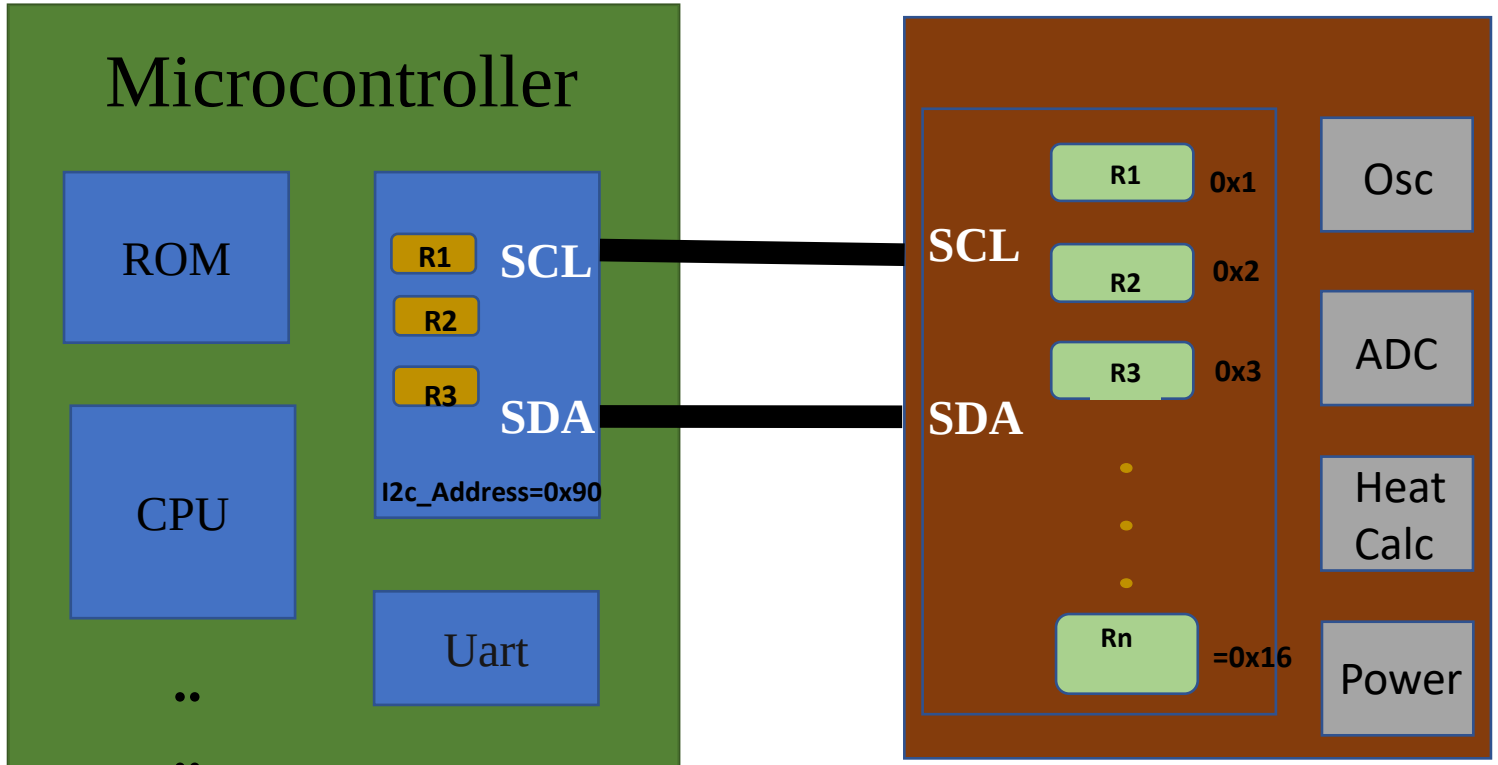

Temperature Sensor
(Device Address=0xC0)

I2c write

- In this Example A micrcontroller want to communicate a chip whose Address is 0xC0
- The controller wants to write 0x55 in its R0 register whose address is 0x16.

```
#include
                // sda, scl
I2C     i2c( p28, p26 );

int main() {
    char     data[2];

    data[0]    = 0x16;
    data[1]    = 0x55;
    i2c.write( 0xC0, data, 2 );
}
```

I2c Read

```
#include
          // sda, scl
I2C     i2c( p28, p26 );

int main() {
    char     data[];
    uint8_t rxBuffer[2]

   data[0]    = 0x16;

   i2c.writeRead( 0xC0, data, rxBuffer , 2 );
```