Deep Learning-Based Handover Prediction for 5G and Beyond Networks

João P. S. H. Lima†, Álvaro A. M. de Medeiros ‡, Eduardo P. de Aguiar §, Edelberto F. Silva §,
Vicente A. de Sousa ⋆, Marcelo L. Nunes * and Alysson L. Reis *
† CPQD, Campinas, Brazil. ‡ Munster Technological University, Cork, Ireland.
§ Federal University of Juiz de Fora, Juiz de Fora, Brazil. ⋆ Federal University of Rio G. do Norte, Natal, Brazil.
* Brazilian National Telecommunication Agency (ANATEL), Belo Horizonte, Brazil.
E-mails: jsales@cpqd.com.br, alvaro.medeiros@mtu.ie, eduardo.aguiar@engenharia.ufjf.br,
edelberto@ice.ufjf.br, vicente.sousa@ufrn.edu.br, {mlnunes,alysson}@anatel.gov.br

ICC 2023 - IEEE International Conference on Communications | 978-1-5386-7462-8/23/$31.00 ©2023 IEEE | DOI: 10.1109/ICC45041.2023.10279195

***Abstract*—Although the 5G New Radio standard empowers the mobile communication networks with diverse technologies such as Massive MIMO, mmWave deployments, and much more, some network functionalities still do not explore the potential of assembling Artificial Intelligence to their methodologies. The handover procedure is planned very similarly to in older 3GPP networks, based on simple power measurement comparisons and rudimentary parameter tuning, such as Time-To-Trigger and Hysteresis. This work develops and evaluates with simulations and real network data a new Deep Learning approach to support the handover triggering decision toward a data-driven procedure for next-generation networks. Our solution relies on predicting future samples of standard Reference Signals using Long Short-Term Memory Networks (LSTM) in the first stage. After, the predicted power samples are sent to a binary classification algorithm to identify if the time series will lead or not to a handover triggering. The results show a mean absolute error of around 0.6 dB predicting power signal samples and over 97% of accuracy, indicating the future handover trigger moment. Finally, we discuss possible use cases to implement our model, including Open RAN and MEC architectures.**

***Index Terms*—Handover, Deep Learning, LSTM, Mobile Networks**

I. Introduction

Handover is vital for cellular networks, allowing User Equipment (UE) to have their sessions transferred from one serving cell to another without any connection failures. This procedure requires a high level of coordination from the network perspective since the radio resources need to be allocated for the new incoming user in a neighbor cell. The data transferred also needs to be forwarded and processed correctly so UE does not miss packets, nor the number of re-transmissions is augmented due to mobility [1]. Suppose handovers are triggered inefficiently, i.e. leading to failures or ping-pong handovers, for instance. In that case, the bandwidth for control messages and the radio resources involved in such a procedure represents a significant waste of operators' resources, heavily affecting the Quality of Experience (QoE) [2].

This study was financed in part by Funttel/Finep - Grant No. 01.20.0179.00, and the Coordenação de Aperfeiçoamento de Pessoal de Nível Superior - Brasil (CAPES) - Finance Code 001. The proof of concept simulations provided by this work was supported by High Performance Computing Center (NPAD/UFRN).

As newer generations of mobile communication standards occur, the demand for higher bandwidth and throughput is more significant, besides lower latency. New services shall have strict requirements upon handover performance. Additionally, the number of handovers is expected to rise significantly with dense and high-frequency scenarios that network operators are deploying. These requirements impose a tough challenge for handover procedure optimization since the available methods for Long Term Evolution (LTE) and New Radio (NR) are still primitive, based on simple algorithms of power measurement comparisons [3].

Therefore, this work proposes a new approach based on Deep Learning to predict the handover trigger decision, relying on standard power measurement signals (RSRP, in this case). The output of our model can be fed to other applications to enhance network coordination for handover procedures in a wide range of cases, as we discuss further. The main contributions of this work are as follows:

- We adopt a Deep Learning-based approach that uses LSTM network to forecast future samples of traditional reference signal powers; Then we extend our predictions with a classification stage to indicate the handover decision (power measurement time series leads or not to a handover trigger decision) according to predicted samples from the early stage;
- Our models do not require new measurements or information as inputs, such as geopositioning or higher layers Key Performance Indicators (KPIs). Only the same reference signals that are already well established in current standards;
- Our proposal is validated with simulated and real network data and reaches near 97% of accuracy; Additionally, all scripts and the dataset are publicly available for reproducibility.
- We discuss cases that could adopt our models to enhance handover performance in Open Radio Access Networks (Open RAN) and Multi-access Edge Computing (MEC) scenarios.

This work is organized as follows. Section II presents the

Authorized licensed use limited to: International Institute of Information Technology-Raipur. Downloaded on November 30,2025 at 13:55:23 UTC from IEEE Xplore. Restrictions apply.

background information about current handover methods and state-of-the-art approaches to treat handovers in the context of Machine Learning. Next, Section III describes in detail our solution and we cover its evaluation in Section IV. Finally, Section V covers the conclusions.

II. Background

A. Reference Signals and Current Handover Methods

A Measurement Report is exchanged periodically between UEs and the network to inspect the radio channel conditions. These signals include Reference Signal Received Power (RSRP), and Reference Signal Received Quality (RSRQ), the main metrics for handover and cell re-selection. The first one provides a cell-specific signal power report and includes the current serving cell and the neighbor ones perceived by the UE. The second brings calculations with the desired signal strength and interference. In current standards, the handover procedure is executed after regularly monitoring these signals and the triggering decision relies on measurement events described by 3GPP specifications, as seen on Table I [4].

TABLE I
Characteristic events for 3GPP Handover [4].

Event	Description
A1	Primary cell (PC) becomes better than a threshold
A2	Primary cell becomes worse than a threshold
A3	Secondary cell becomes better than PC by an offset
A4	Secondary cell becomes better than a threshold

Based on the events shown in Table I, the algorithms are developed with simple signal comparisons and the adjustment of related parameters. These traditional methodologies could not be sufficient to deliver the efficiency expected for next-generation networks, specially considering complex urban scenarios, with mmWave frequencies, and dense deployments with more connected devices, achieving poor performance and flooding the network with control plane messages with rash handover decisions. In this case, it can degrade spectral efficiency and provide weak performance for users [5]. Considering this complex environment of an operator's network point of view and the vast data available, the interest of Artificial Intelligence (AI) and Machine Learning (ML) in Mobile Communications are rising. Many studies investigating these limitations can be found in the literature, and the most relevant proposals will be examined ahead.

B. Related Work

The authors of [6] propose a Recurrent Neural Network to monitor a long list of parameters from different layers of the LTE protocol stack and predict the file download time. In [7], they expand their approach to encompass available network data to make smarter decisions for initial modulation coding schemes (MCS) after a handover, using LSTM and Autoencoders. It is crucial to notice the increase of processing and complexity since these strategies demand monitoring metrics from all layers. The authors of [8] apply LSTM to monitor reference signals from serving and neighbor cells to predict radio link failures after handover procedures, but the scenario used to capture data is very simple. It contains only two base stations, and both UE behavior and channel conditions are very predictable in a straight-line movement.

Another approach is presented by [9], where LSTM is also applied in the context of mobility management. They propose a solution to predict UEs' trajectory so that handover performance is enhanced. A similar trajectory prediction model is developed in [10] in a vehicular network scenario, also relying on LSTM. Notice that these works require localization as inputs, which is not standardized yet for handover algorithms and could cause legal issues, despite increasing data processing complexity since the samples are not captured shortly. In [11], a classification is made with tree-based architecture algorithms and LSTM to indicate the next serving cell according to earlier channel estimation.

We emphasize that the use of AI/ML models to help handover decisions is being widely investigated, as depicted above. However, some approaches tend to drastically increase the complexity of such a procedure and demand higher computational costs. On the other hand, our proposed solution do not require extra data from other layers or other sources (*e.g.*, geopositioning, PDCP packets). It currently uses only the serving cells' traditional Reference Signals, established in LTE and NR standards. With that, our model predicts possible handover trigger points around 100 ms ahead, a significant time window in mobile communications, allowing this information to be used by other use cases, such as vehicular networks, Open RAN, and MEC scenarios, as discussed in the next section.

III. Proposed Model

The objective of our work is to forecast the handover decision by estimating the channel conditions that will lead to triggering events. First, we analyzed the radio channel outputs from our simulation campaign and real network collection. Next, we developed a Deep Learning model to estimate future signal power samples using Long Short-Term Memory Neural Networks. Finally, the predicted signal power time series are used as inputs to the final stage of our solution, which classifies if that series will trigger a handover.

Once the handover trigger decision is foreseen, other architecture elements can make use of this important information to enhance network and UE performance with other applications, such as allocating radio resources for incoming UE with certainty; avoiding unnecessary handover that may be triggered by unexpected channel fluctuation; alerting connected vehicles to near handover making in Smart cities; adapting flight plans of UAVs in urban scenarios; feeding other network tools to avoid Radio Link Failures and Connection Re-establishments.

A. Handover prediction model

The proposed model is composed of five consecutive stage, as seen in Fig. 1.

Authorized licensed use limited to: International Institute of Information Technology-Raipur. Downloaded on November 30,2025 at 13:55:23 UTC from IEEE Xplore. Restrictions apply.

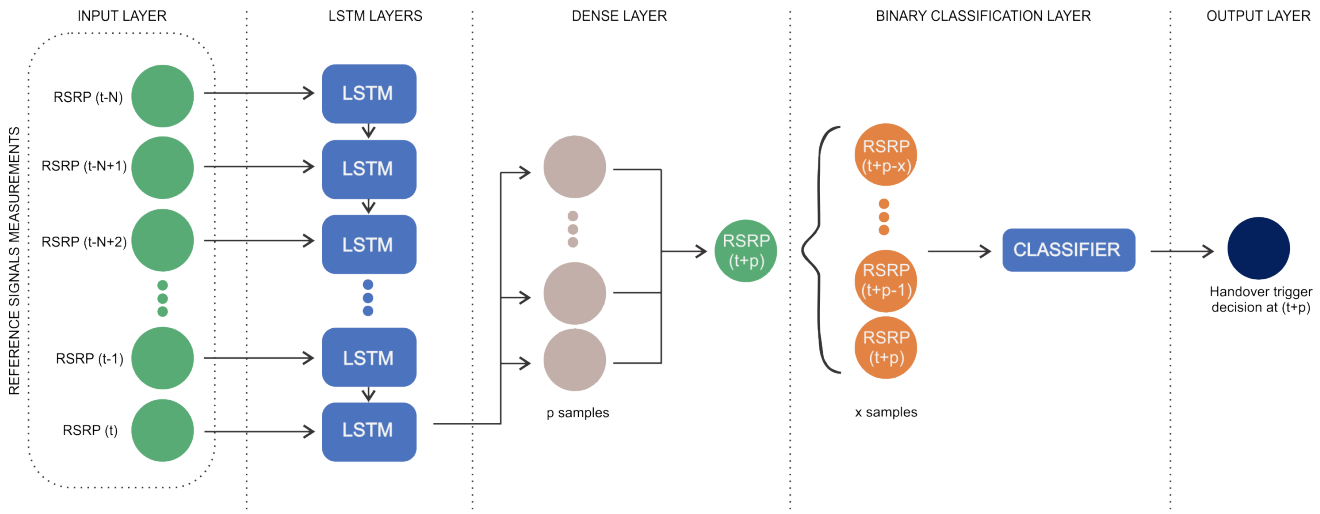

Fig. 1. Handover prediction model architecture.

- The first one is the Input layer, in a window format, to shape the last N samples of radio measurements in a vector;
- The second stage is built of LSTM layers. A LSTM layer is a neural network layer specialized in keeping local memory of the input elements, capable of extracting relations among different sequential samples. The LSTM unit (or neuron) is modified from the traditional feed-forward neural network, introducing feedback connections. These connections (usually named gates) regulate the information flow entering and leaving the cell, i.e. providing the Long Short-Term Memory feature of this design. With that, LSTM is used to forecast time series data and to predict future samples in time $t+p$. The best parameters to fit our data were found in extensive search and our final configuration has 4 layers, with 120 LSTM units in the first one, and 50 in each of the last 3 layers;
- The third stage is a Dense layer, in which the outputs from the LSTM layers are combined into one last neuron, producing the Reference Signal estimation at time $t+p$. This final unit has a different activation function, in order to produce the desired numeric output (i.e. the estimation of a power measurement). The activation function selected for this purpose was the sigmoid function, whereas the ReLu function works best for the hidden layers. The results of this stage are predicted power samples;
- After, we model the fourth stage by vectorizing the outputs from last stage with x samples to serve as input to this Binary Classification stage. This is composed of another algorithm, a classifier that is constructed to best indicate whether the input sequence of predicted power samples leads or not to a handover triggering. It is a classification task.
- Finally, the fifth stage is the output layer, which determines a binary result of the handover trigger estimation at time $t+p$.

After data collection, there is a need to pre-process to shape our inputs to the models applied in our solution. LSTM requires a 3D vector with samples, time-stamp, and features, while the classification algorithm only demands a 2D vector with samples and features. Moreover, notice that we model the input of the fourth stage with x samples to offer flexibility to this design. Not necessarily do we need to predict p samples ahead of time t in the LSTM stage and use all p samples as inputs to the classifier. Here, we used the last 50 samples.

We developed our LSTM with Keras framework [12]. We set the RMSProp optimizer and the Mean Squared Error loss function for LSTM, so that minimum mean absolute error should be verified in the predicted power signal output samples. The training of the LSTM stage was made upon many RSRP time series and we also added Droupout layers in our LSTM design in order to avoid overfitting. These layers randomly ignore a part of neurons, not allowing next layers to balance possible errors produced by past layers. In this sense, for the Classification stage, we also conducted a cross-validation technique (Stratified k-Fold, with $k=5$) [13]. This technique splits the inputs into k groups respecting a similar proportion of labeled class data (i.e. a similar number of inputs labeled as 1 are sent to each k portion). The training of the algorithm is conducted using $k-1$ portions of input data and then it is tested on the portion left aside. The process is repeated until the algorithm is trained with all k portions, guaranteeing the algorithm uses all the data in training and testing phases. The result should be the average performance of the k folds. Additionally, to provide further statistical robustness, this process was repeated 30 times, with different random seeds, and the final result is the average from those.

It is important to mention that the handover triggering point can be considered a rare event among all the power measurements, i.e. the exact time step that the handover is triggered is a single point in a long time series collection. More than 1 million Reference Signal samples are collected

Authorized licensed use limited to: International Institute of Information Technology-Raipur. Downloaded on November 30,2025 at 13:55:23 UTC from IEEE Xplore. Restrictions apply.

in our model evaluation, but the handover trigger points are a few hundred, leading to an imbalanced data set. This is common in AI/ML applications, where the labeled data has much fewer data from one category than another and can affect the classifier performance. Here, we used a combination of two classic techniques for handling this problem: first, we applied undersampling (Tomek Links) and latter oversampling technique (SMOTE). The first one is responsible for removing those samples treated as unnecessary for the classification task with tiny distances to points of the minor category. This aims to balance the data set while helping the classification by facilitating the separation of categories. The second technique is used to populate the data set with newly generated data points that are very similar to those of the minor category, balancing even more the data set.

B. Classification algorithms

Four algorithms are considered for evaluation: K-Nearest Neighbors (KNN), Support Vector Machines (SVM), Multilayer Perceptron Networks (MLP) and Random Forest (RF) [13], [14]. Their hyperparameters are selected after extensive search conducted during training and cross-validation phases, as described in Section III-A. We also developed public repositories where all the scripts and the dataset can be obtained, allowing reproducibility [1]. Since they are well-known models for classification tasks, we skip their conceptual description and indicate some of their main parameters below.

In our evaluation, KNN is applied considering the Minkowski distance, leaf size of 200 and $K = 2$ for the best result. For SVM, our comparison adopted the *RBF* kernel and the penalty parameter as $C = 500$. Regarding MLP, the best solver found to our problem was *LBFGS* with 2 hidden layers of 120 neurons each. Finally, RF adopted the number of estimators equals to 200, with *Gini* impurity criterion for tree quality.

C. Possible use cases of the proposed model

This Section describes the possibilities to employ our model in real application scenarios. The first one is related to an Open RAN deployment [15]. There is firm guidance in such architecture towards cloudification, virtualization, and disaggregation of network functions and components. Additionally, the utilization of AI/ML models has a strong appeal since introducing an innovative element, the RAN Intelligent Controller (RIC). This is a logical platform that shall host third-party optimization applications, such as the one developed in this work. These applications (referred to as xApps) can obtain network data of mid and high layers from RAN elements to feed their models. After it, the xApps can propose new network parameters, actions, or any behavior change that should result in network enhancement (*e.g.*, xApps for cell load balancing, smart beamforming, network slicing). Fig. 2 demonstrates the architecture and the hosting of AI/ML applications.

Our handover predicting model could be deployed in a containerized version to a xApp. The E2 interface, which connects RAN elements to RIC, should provide RAN data such as those required in this work (the Reference Signals, *e.g.*, RSRP, RSRQ). With the ongoing operations, the handover predicting xApp would be able to forecast with high precision when a handover triggering point is expected. With that, other xApps could use this information to enhance network and user performances. For instance, a current download could be fastened to end up before the handover with a modification of allocated bandwidth (*e.g.*, requesting dual connectivity). A Radio Link Failure (RLF) application could use the estimated handover triggering point to diminish the average number of RLF in a cell cluster. The number of ping-pong handovers could also be lowered when recurrent handover trigger points are predicted, evaluating which one is indeed necessary.

Another possibility would be integrating our model into a MEC application in a Vehicle-to-Everything (V2X) context. This architecture brings data and computational resources closer to the network edge and users, enabling low latency deployments [16]. The handover prediction model could assist the vehicular network in these actions, avoiding connection failures and allocating the required radio resources in an anticipatory way. The handover model could be deployed as an edge service to capture Reference Signal samples from the MEC Platform 2 (MP2) interface, make the predictions and forward them to a V2X application. Thus, it is possible to handle the bandwidth allocation and avoid radio link failures accordingly.

IV. Performance Evaluation

A. Simulation

The simulation setup is developed using *ns-3*, a well-known and tested open-source network simulator [6], [7]. The environment counts with 21 cell sectors in 7 base stations (BSs) and 20 UEs moving with the speed of 60km/h, a reasonable speed for a possible V2X context addressed in Section III. The traditional Okumura-Hata propagation model is set as a path loss model. Additionally, the large-scale effect of shadowing is employed ($\sigma = 8$ dB), and Rayleigh fading is also considered. RSRP levels are obtained every 1 ms for each UE. The protocol stack deployed is LTE, and the

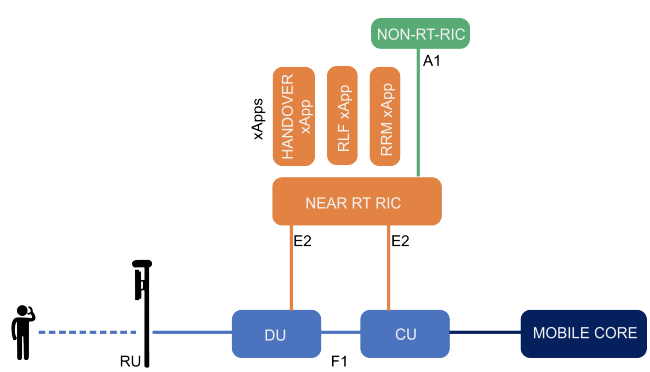

Fig. 2. The Open RAN Architecture hosting Handover xApp.

[1]https://github.com/jpshlima/lstm-handover

Authorized licensed use limited to: International Institute of Information Technology-Raipur. Downloaded on November 30,2025 at 13:55:23 UTC from IEEE Xplore. Restrictions apply.

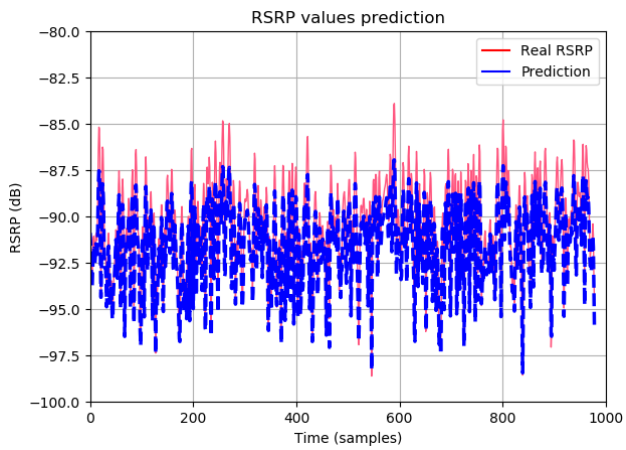

Fig. 3. RSRP prediction from LSTM.

simulation runs for 10 seconds. Every handover trigger time is also captured so that we can label our data for classification.

The evaluation of the LSTM model relies on Mean Absolute Error (MAE), which is the absolute value of the difference between predicted samples $\hat{s}_t$ and real samples s_t captured by simulation logs, given by Eq. (1), in which T is the total number of samples.

$$MAE = \frac{1}{T}\sum_{t=0}^{T-1} |\hat{s}_t - s_t|. \tag{1}$$

After the training phase, our model obtained $MAE = 0.6$ dB, which is a very low value considering that typical RSRP levels float around [-60, -110 dB]. Fig. 3 illustrates how adequate the model fits into our problem, considering the severe propagation conditions imposed by the simulation setup. It is relevant to notice that the achieved performance is set for predicting a window size of 100 samples. In our case, this means 100 ms of anticipation, a significant amount of time for decision making of AI/ML models (such as the one used in the second stage) or the network as a whole. By increasing this parameter excessively, the LSTM error naturally increases.

For the Classification stage, the evaluation relies on Accuracy, its Standard Deviation, and F1 Score. Those metrics compose a balance between true positives, false positives, and false negatives (also known as Precision and Recall). The Accuracy is given by the ratio of the number of correct predictions and the total quantity of predictions. The Standard Deviation of the Accuracy is considered to express the stability of the model, since we evaluate each model 30 times with different random seeds. The F1 Score is expressed by Eq. (2), where TP is the number of True Positives, FP is the number of False Positives, and FN is the number of False Negatives. The F1 Score properly indicates if the model is exhibiting a satisfactory performance since it considers not only its precision but also how sensitive it is to the event of interest.

$$F1 = \frac{TP}{TP + 0.5 \cdot (FP + FN)} \tag{2}$$

Fig. 4. One of the routes used during drive test.

We compared four classical classification algorithms as a benchmark, SVM, MLP, KNN and RF, described in Section III-B. The results are shown in Table II.

TABLE II
CLASSIFICATION ALGORITHMS COMPARISON WITH SIMULATED DATA.

Model	Accuracy (± Std. Dev.) (%)	F1 Score (%)
SVM	96.51 (± 0.18)	97.28
MLP	96.11 (± 0.29)	96.23
KNN	88.72 (± 0.28)	89.77
RF	97.63 (± 0.13)	97.64

Although MLP and SVM are robust algorithms for binary classification, we can see in Table II that RF performs slightly better considering both metrics evaluated. We credit the better performance to the fact that tree-based algorithms (such as RF) fit well to a problem that has to evaluate decisions in multiple steps. Achieving over 97% of accuracy is considered excellent performance. In other words, this means that almost every power series is correctly classified to predict future handover trigger decisions. Since F1 Scores reach its best evaluation with 1 (0 is the worst case), the high obtained values of F1 Score determines that the models are sensitive enough to provide both high accuracy and precision – i.e. they are capable of classifying adequately for both categories (handover / not a handover). On the other hand, KNN could not provide a competitive performance, due to the simplicity of its underlying algorithm based on distance calculations.

B. Real network data evaluation

The data collection campaign took place in Belo Horizonte, one of the biggest cities in Brazil. The drive test was conducted on three days, collecting reference signal data (RSRP, for our study case) from a LTE network of one of the major operators of the country. We utilize a vehicle equipped with a TSMW radio network analyzer [17] and a 0-dBi-gain omnidirectional antenna. The average velocity during the measurement campaign was 50 km/h. Fig. 4 illustrates one of the routes used in the test.

A new training phase was conducted, so the proposed model could fit into the real network data. Using the same metric,

Authorized licensed use limited to: International Institute of Information Technology-Raipur. Downloaded on November 30,2025 at 13:55:23 UTC from IEEE Xplore. Restrictions apply.

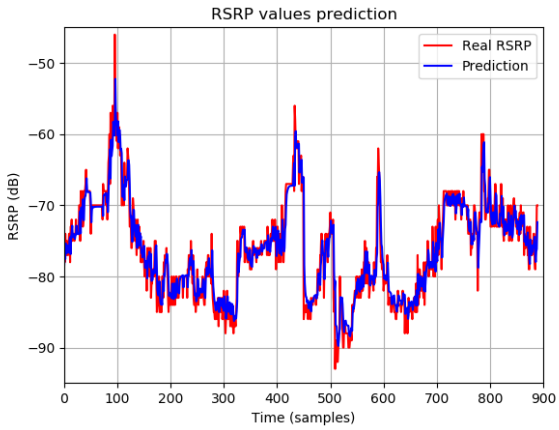

Fig. 5. RSRP prediction from LSTM based on real network data.

we obtained $MAE = 1.74$ dB, which is higher than the error obtained from simulated data, as it could be expected. Nonetheless, it is important to mention that still is a very small value, considering typical RSRP values. We can notice in Fig. 5 how well the predicted samples fit into real collected data.

Next, for the classification stage, the same metrics were considered and the same algorithms were evaluated. The results are exhibited on Table III.

TABLE III
CLASSIFICATION ALGORITHMS COMPARISON WITH REAL NETWORK DATA.

Model	Accuracy ($\pm$ Std. Dev.) (%)	F1 Score (%)
SVM	95.39 ($\pm$ 0.26)	95.01
MLP	93.69 ($\pm$ 0.30)	93.97
KNN	95.08 ($\pm$ 0.29)	95.24
RF	95.10 ($\pm$ 0.30)	95.23

In this scenario, SVM provides the best accuracy by a small margin, however RF and KNN delivers better results in terms of F1 Score, in other words they make less false predictions when considering a balance of the two classes (leads or not to a handover). Hence, this allows us to say RF is more adherent to the presented data. Additionally, MLP performs worse again, being inadequate to handle the proposed problem.

Another important aspect to mention is that the classification stage requires very short processing time. The training and the evaluation phases of thousands of samples require only a small amount of seconds. When the model is already trained, the time consumed for the classification of one sample is negligible, acceptable for application in networks.

V. CONCLUSIONS

The handover procedure is essential to mobile communications. However, it is still based on elementary power measurement comparison algorithms, even in NR standards. This work presented a model to predict the handover triggering points by forecasting reference signals used as the main metrics for today's handover algorithms relying on the Deep Learning approach. In the first stage, an LSTM network is employed to predict RSRP values. Later, a classification algorithm determines if that predicted series leads or not to an upcoming handover decision. Our LSTM model is evaluated using simulated and real network data, and achieved a very low MAE in forecasting future RSRP samples (around 0.6 dB), and the classification algorithms have an accuracy of over 97% in some cases. Furthermore, we discussed two possibilities of integrating our model into next-generation networks, including Open RAN and MEC architectures. As a future work, we plan to experiment the models in a 5G Open RAN testbed that is under development.

REFERENCES

[1] M. Tayyab, X. Gelabert, and R. Jäntti, "A survey on handover management: From lte to nr," *IEEE Access*, vol. 7, pp. 118 907–118 930, 2019.

[2] M. M. Hasan, S. Kwon, and S. Oh, "Frequent-handover mitigation in ultra-dense heterogeneous networks," *IEEE Transactions on Vehicular Technology*, vol. 68, no. 1, pp. 1035–1040, 2019.

[3] A. Stamou, N. Dimitriou, K. Kontovasilis, and S. Papavassiliou, "Autonomic handover management for heterogeneous networks in a future internet context: A survey," *IEEE Communications Surveys & Tutorials*, vol. 21, no. 4, pp. 3274–3297, 2019.

[4] "3GPP TS 36.133." 3GPP, 2009, Evolved Universal Terrestrial Radio Access (E-UTRA); Requirements for Support of Radio Resource Management.

[5] T. C. de Brito Guerra, Y. R. Dantas, and V. A. Sousa Jr, "A machine learning approach for handover in lte networks with signal obstructions," *Journal of Communication and Information Systems*, vol. 35, no. 1, pp. 271–289, 2020.

[6] Z. Ali, M. Miozzo, L. Giupponi, P. Dini, S. Denic, and S. Vassaki, "Recurrent neural networks for handover management in next-generation self-organized networks," in *IEEE Annual International Symposium on Personal, Indoor and Mobile Radio Communications*. IEEE, 2020.

[7] Z. Ali, L. Giupponi, M. Miozzo, and P. Dini, "Multi-task learning for efficient management of beyond 5g radio access network architectures," *IEEE Access*, vol. 9, pp. 158 892–158 907, 2021.

[8] S. Khunteta and A. K. R. Chavva, "Deep learning based link failure mitigation," in *IEEE International Conference on Machine Learning and Applications*. IEEE, 2017.

[9] Q. Liu, G. Chuai, J. Wang, and J. Pan, "Proactive mobility management with trajectory prediction based on virtual cells in ultra-dense networks," *IEEE Transactions on Vehicular Technology*, vol. 69, no. 8, pp. 8832–8842, 2020.

[10] W. Qi, Q. Song, S. Wang, Z. Liu, and L. Guo, "Social prediction-based handover in collaborative-edge-computing-enabled vehicular networks," *IEEE Transactions on Computational Social Systems*, vol. 9, no. 1, pp. 207–217, 2022.

[11] N. Uniyal, A. C. Bravalheri, W. Featherstone, X. Vasilakos, S. Wu, D. Warren, R. Nejabati, and D. Simeonidou, "Intelligent mobile handover prediction for zero downtime edge application mobility," in *IEEE Global Communications Conference*. IEEE, 2021.

[12] F. Chollet. (2022) Keras, the python deep learning api. [Online]. Available: https://keras.io

[13] I. Goodfellow, Y. Bengio, and A. Courville, *Deep Learning*. MIT Press, 2016.

[14] K. P. Murphy, *Machine learning: a probabilistic perspective*. MIT Press, 2012.

[15] O-RAN Alliance, "O-ran use cases and deployment scenarios whitepaper," February 2020.

[16] S. D. A. Shah, M. A. Gregory, S. Li, and R. D. R. Fontes, "Sdn enhanced multi-access edge computing (mec) for e2e mobility and qos management," *IEEE Access*, vol. 8, pp. 77 459–77 469, 2020.

[17] Rohde & Schwarz, "R&S TSMW User Manual," 2017. [Online]. Available: https://www.rohde-schwarz.com/manual/r-s-tsmw-user-manual-manuals-gb1_78701-29128.html

Authorized licensed use limited to: International Institute of Information Technology-Raipur. Downloaded on November 30,2025 at 13:55:23 UTC from IEEE Xplore. Restrictions apply.