MONASH University

FIT1047 Applied Session Week 3

BOOLEAN EQUATION AND KARNAUGH MAPS

OBJECTIVES

- The purpose of this applied session is getting to know Boolean Expressions, and simplifications using K-maps.

INSTRUCTIONS

- Use Logisim to draw circuits. Apply K-map to simplify equations.
- You may work in a small group.

Activity 1: Boolean Equation to Circuit

Given a Boolean expression:

$$F(A,B,C) = \bar{A}\bar{B}C + \bar{A}BC + A\bar{B}\bar{C} + A\bar{B}C + ABC$$

- (i) Use Logisim to build a circuit for this function. Use only AND, OR and NOT gates. How many gates do you need?
- (ii) Write down the truth table for this function,

Sample Solution:

(i) Use Logisim to build a circuit for this function. Use only AND, OR and NOT gates. How many gates do you need?

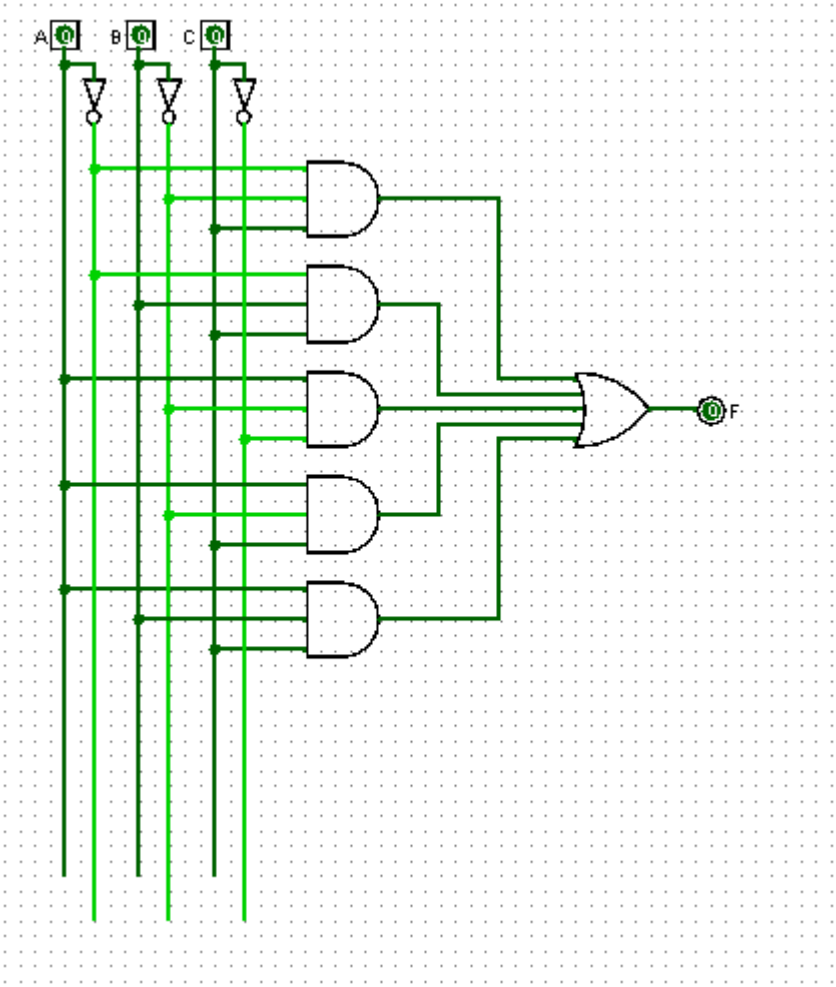

Number of gates used: Nine. To compare with different versions of logic circuits for the same logic equation, we may ignore the NOT gates used for negation of inputs.

(ii) Write down the truth table for this function

A	B	C	F
0	0	0	0
0	0	1	1
0	1	0	0
0	1	1	1
1	0	0	1
1	0	1	1
1	1	0	0
1	1	1	1

Activity 2: Boolean Equation Simplification (using K-map):

Given a Boolean Expression:

$$F(X,Y,Z) = Y(\overline{X}Z + \overline{Z}) + \overline{Y}(XZ + \overline{Z})$$

- (i) Write down the truth table,
- (ii) Draw a logic circuit using the original Boolean expression,
- (iii) Simplify the equation using K-map,
- (iv) Draw the logic circuit using the simplified Boolean expression.

Sample Solution:

(i) Write down the truth table

X	Y	Z	F
0	0	0	1
0	0	1	0
0	1	0	1
0	1	1	1
1	0	0	1
1	0	1	1
1	1	0	1
1	1	1	0

(ii) Draw a logic circuit using the original Boolean expression

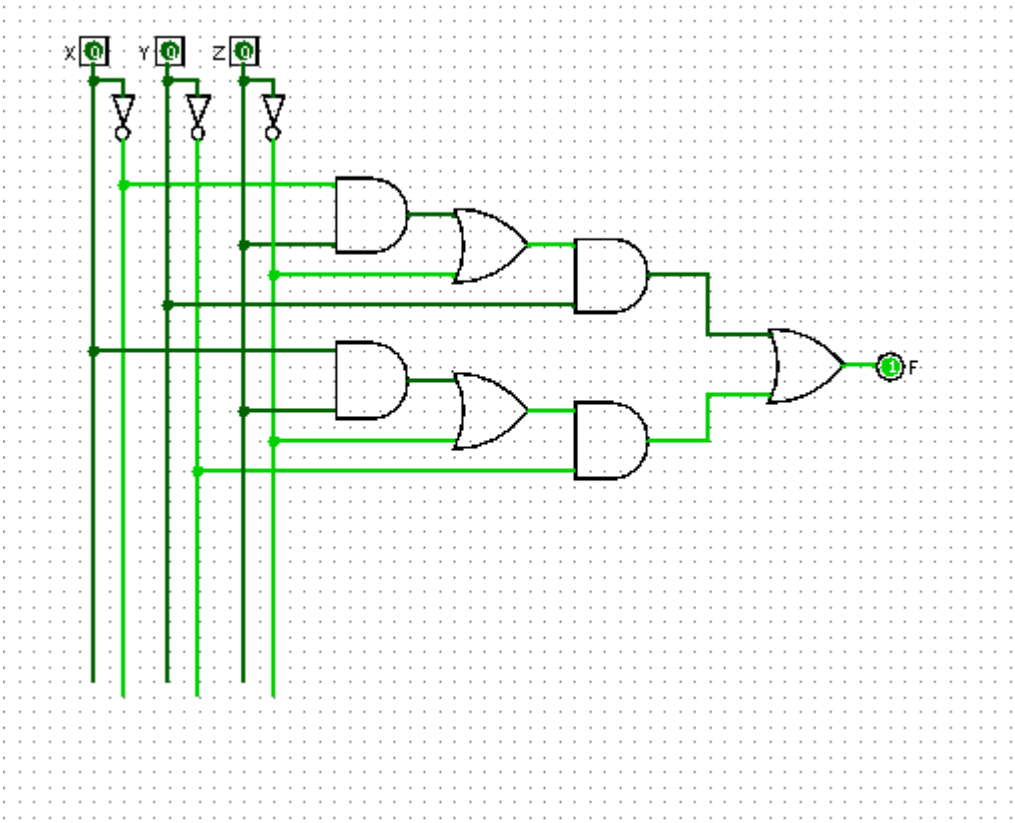

(iii) Simplify the equation using K-map

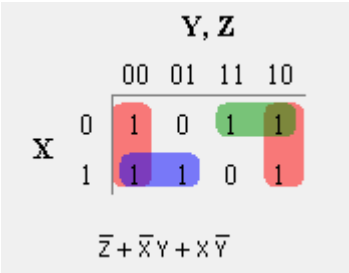

(iv) Draw the logic circuit using the simplified Boolean expression

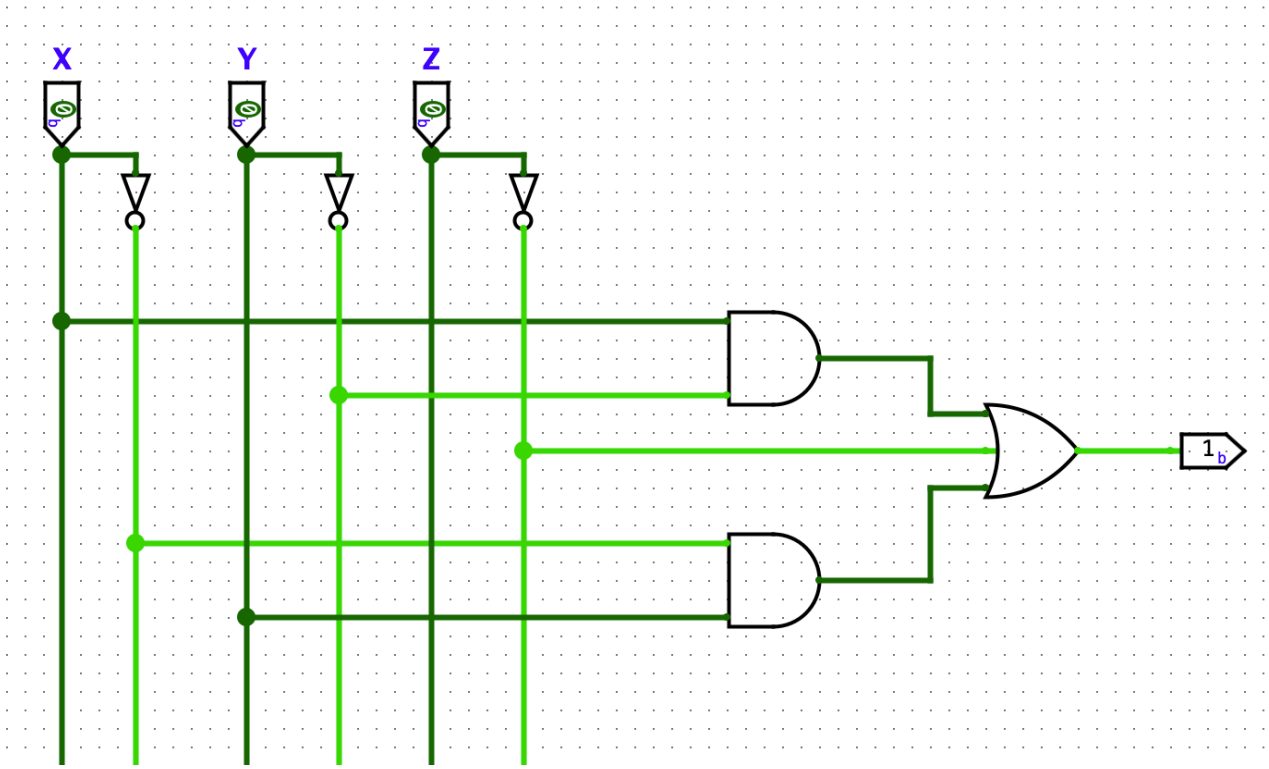

Activity 3: Boolean Equations from Truth Tables

The truth table below describes a Boolean function with inputs A, B, C and D and output Z.

- (i) Create a Boolean equation using the SOP method
- (ii) Build a K-map and
- (iii) Derive a simplified equation from the K-map.

A	B	C	D	Z
0	0	0	0	1
0	0	0	1	1
0	0	1	0	1
0	0	1	1	0
0	1	0	0	1
0	1	0	1	1
0	1	1	0	0
0	1	1	1	1
1	0	0	0	0
1	0	0	1	0
1	0	1	0	1
1	0	1	1	0
1	1	0	0	0
1	1	0	1	0
1	1	1	0	0
1	1	1	1	1

Sample Solution:

(i) Create a Boolean equation using the SOP method.

Z = $\bar{A}\bar{B}\bar{C}\bar{D} + \bar{A}\bar{B}\bar{C}D + \bar{A}\bar{B}C\bar{D} + \bar{A}B\bar{C}\bar{D} + \bar{A}B\bar{C}D + \bar{A}BCD + A\bar{B}C\bar{D} + ABCD$

(ii) Build a K-map and

A, B \ C, D	00	01	11	10
00	1	1	0	1
01	1	1	1	0
11	0	0	1	0
10	0	0	0	1

$\bar{A}\bar{C} + \bar{B}C\bar{D} + BCD$

(iii) Derive a simplified equation from the K-map.

Z = $\bar{A}\bar{C} + \bar{B}C\bar{D} + BCD$

Post-class Activity: Reflection

Complete your weekly reflection activity in the Ed Lesson. You would be able to copy/paste your reflections (**more than 200 words in each week**) to meet assignment hurdle requirement.

Assignment 1 Part 3 Practice Quiz Reminder

Don't forget to attempt the **Assignment 1 part 3 practice Quiz** in Moodle (only two attempts allowed).