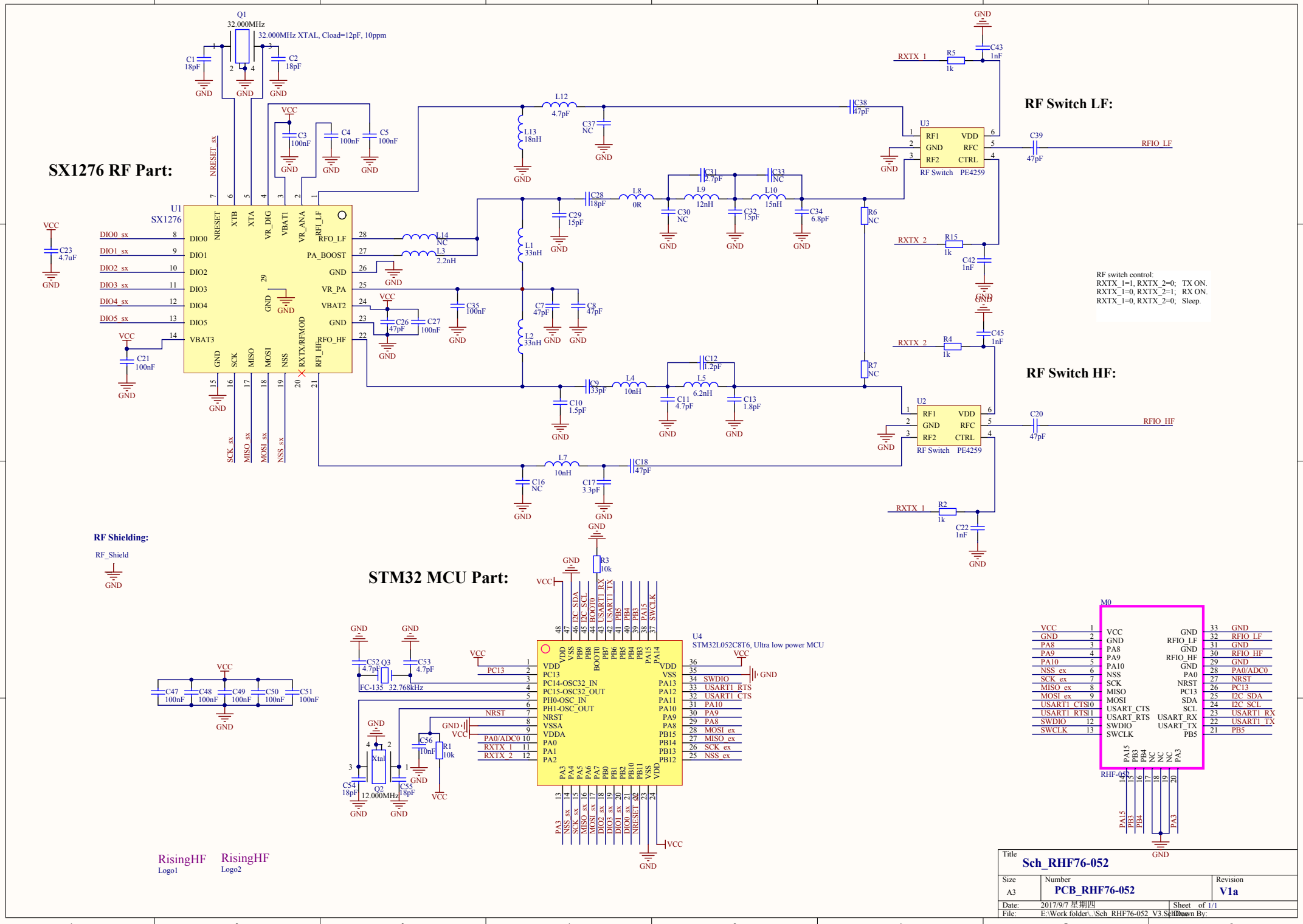
SX1276 RF Part:
U1
SX1276
Q1
32.000MHz
32.000MHz XTAL, Cload=12pF, 10ppm
RF Switch LF:
U3
RF Switch PE4259
RF Switch HF:
U2
RF Switch PE4259
RF switch control:
RXTX_1=1, RXTX_2=0; TX ON.
RXTX_1=0, RXTX_2=1; RX ON.
RXTX_1=0, RXTX_2=0; Sleep.
RF Shielding:
RF_Shield
STM32 MCU Part:
U4
STM32L052C8T6, Ultra low power MCU
FC-135 32.768kHz
Q2
12.000MHz
M0
RHF-052
RisingHF
Logo1
RisingHF
Logo2
Title
Sch_RHF76-052
Size
A3
Number
PCB_RHF76-052
Revision
V1a
Date: 2017/9/7 星期四
Sheet of 1/1
File: E:\Work folder\...\Sch_RHF76-052_V3.SchDoc
Drawn By: