FLORIDA ATLANTIC UNIVERSITY

Department of Ocean and Mechanical Engineering

College of Engineering & Computer Science

Ritchy Hisne

EGM 4350 – Finite Element Analysis

Dr. Chi-Tay Tsai

Thermal Analysis of Aluminum Heat Sink

Objective

Determine the temperature distribution and evaluate heat dissipation performance of an aluminum heat sink.

Model Description

A heat sink was modeled in **SolidWorks** and extruded **44 mm** into a 3D geometry with multiple fins.

Material property:

- Thermal Conductivity: $k = 170\ W/m\cdot°C$

Boundary conditions:

- Ambient temperature: $T\infty = 20°C$
- Convection coefficient: $h = 18\ W/m^2\cdot°C$

Heat input:

- Heat flux = $3000\ W/m^2$

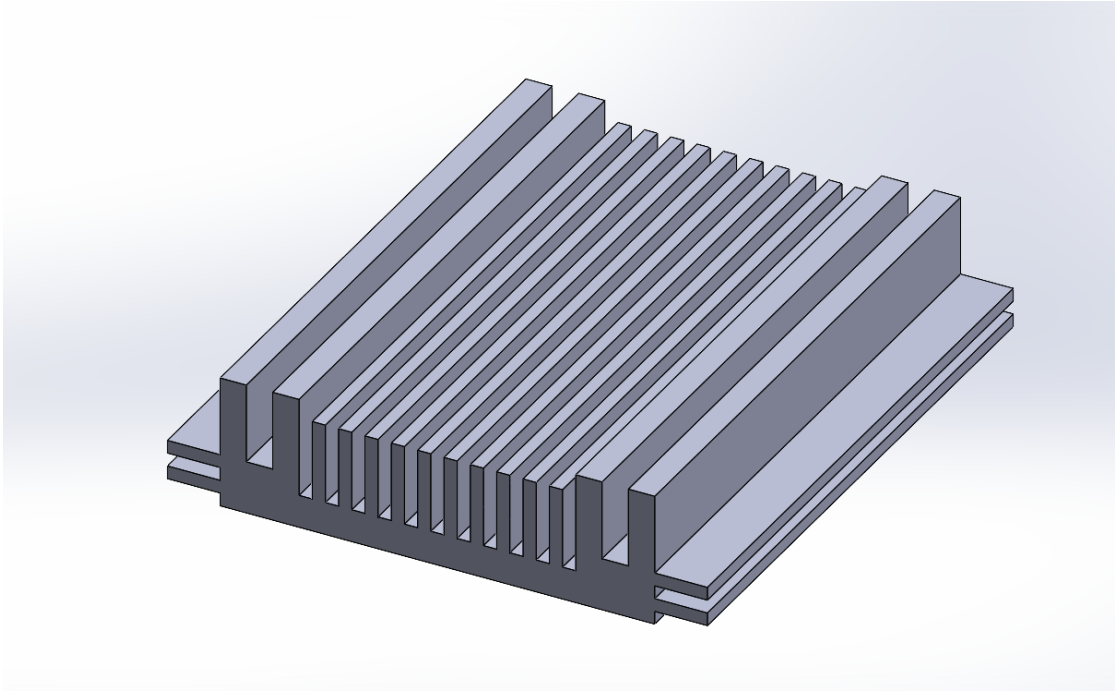

Isometric view

Methodology

The model was imported into ANSYS for steady-state thermal analysis. A heat flux of 3000 W/m^2 was applied to the base surface of the heat sink to simulate heat input. Convection boundary conditions were applied to all exposed surfaces with an ambient temperature of 20°C and a heat transfer coefficient of 18 $W/m^2 \cdot °C$. A thermal mesh was generated to capture temperature gradients across the fins and base, with refinement in areas of expected temperature variation.

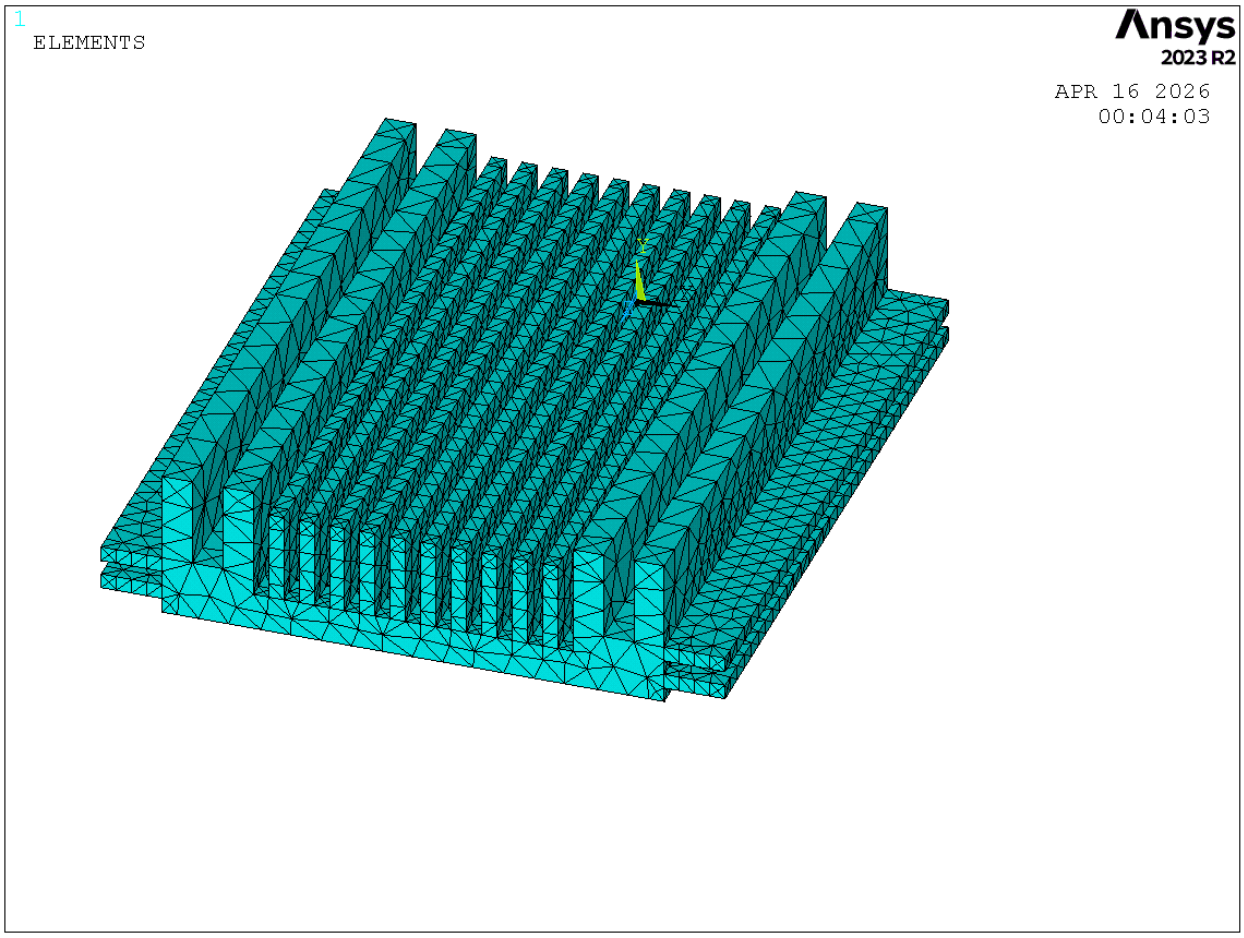

Thermal mesh

Results and Discussion

The temperature distribution shows that the highest temperature occurs at the base of the heat sink where heat is applied. The temperature decreases along the fins due to heat dissipation through convection. The fins effectively increase the surface area, allowing heat to transfer from the base to the surrounding air. The temperature gradient confirms efficient heat flow from the base through the fins.

From ANSYS output:

- Maximum Temperature ≈ 41.6721°C

- Minimum Temperature ≈ 41.4709°C

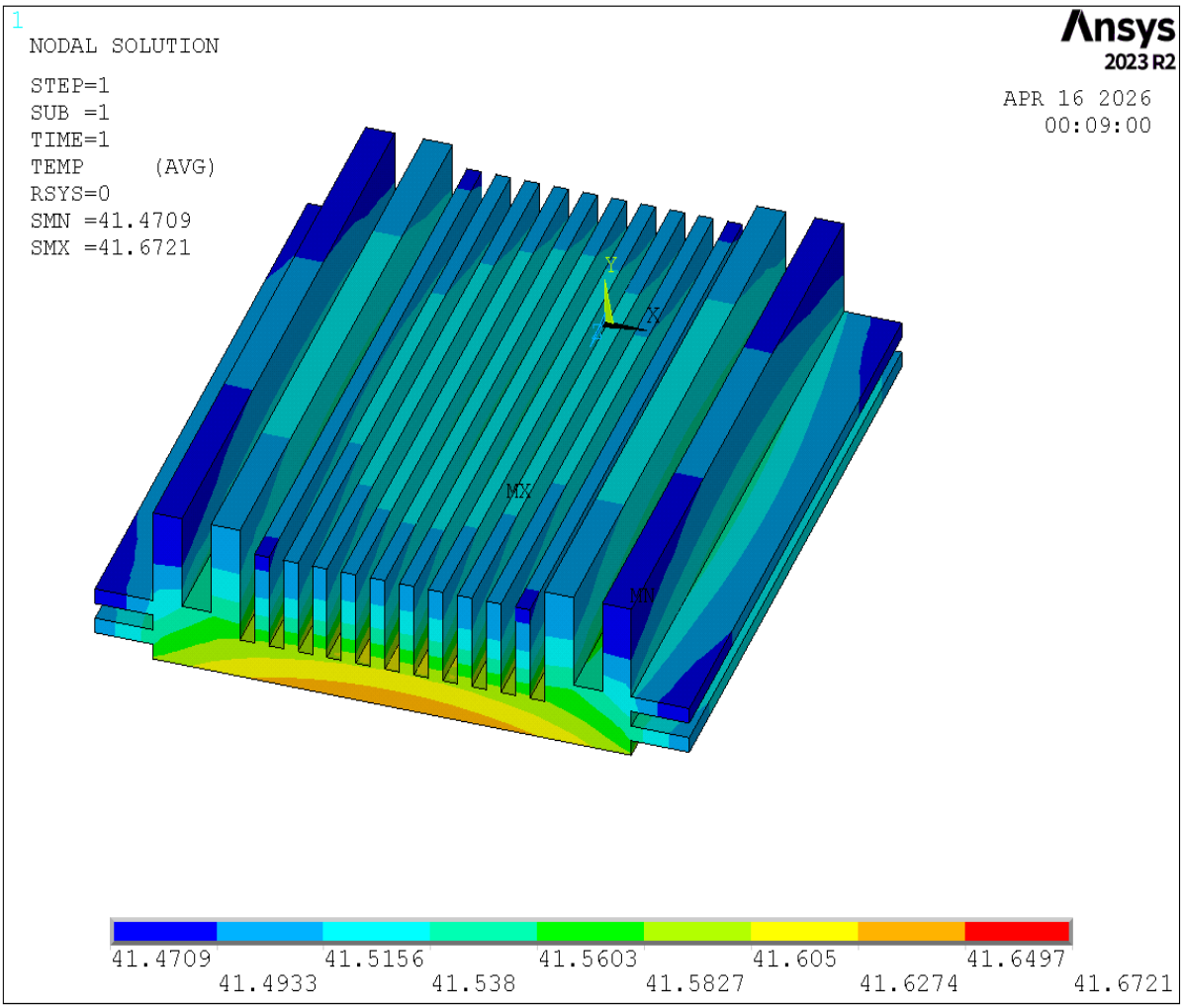

Temperature contour plot

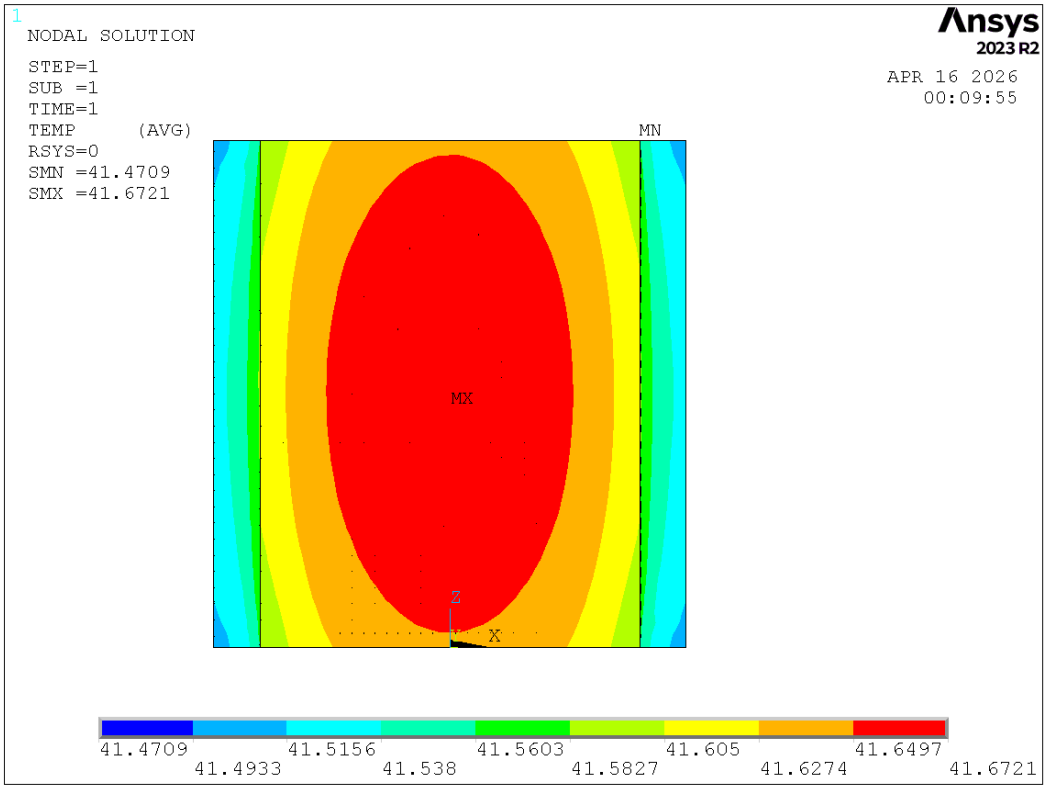

Bottom view

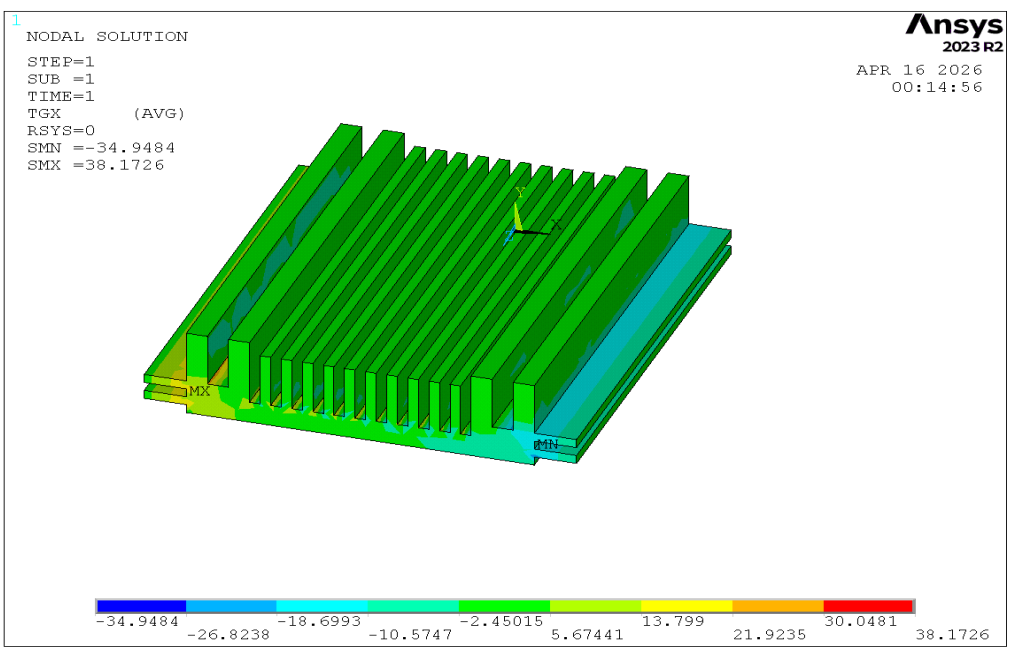

x-component of the Thermal Gradient

Conclusion

The heat sink effectively dissipates heat through the fins, reducing the temperature at the base. The results show that increasing surface area improves heat transfer performance. Further improvements could include optimizing fin geometry or increasing air flow.