FLORIDA ATLANTIC UNIVERSITY

Department of Ocean and Mechanical Engineering

College of Engineering & Computer Science

Ritchy Hisne

EGM 4350 – Finite Element Analysis

Dr. Chi-Tay Tsai

<u>Structural Analysis of Steel Bracket (ANSYS + SolidWorks)</u>

Objective

Analyze the principal stress and displacement distribution of a steel bracket using finite element analysis to identify stress concentration regions and evaluate structural performance under applied loading.

Model Description

A 3D steel bracket was designed in **SolidWorks**, including mounting holes and fillets to represent realistic geometry and reduce artificial stress singularities. The model was exported to **ANSYS** for structural simulation.

Material properties:

- Elastic Modulus: **E = 202 GPa** P
- poisson's Ratio: **ν = 0.30**

Boundary conditions:

- Fixed support applied at the surfaces of the two holes

Loading:

- Distributed load applied on the top surface

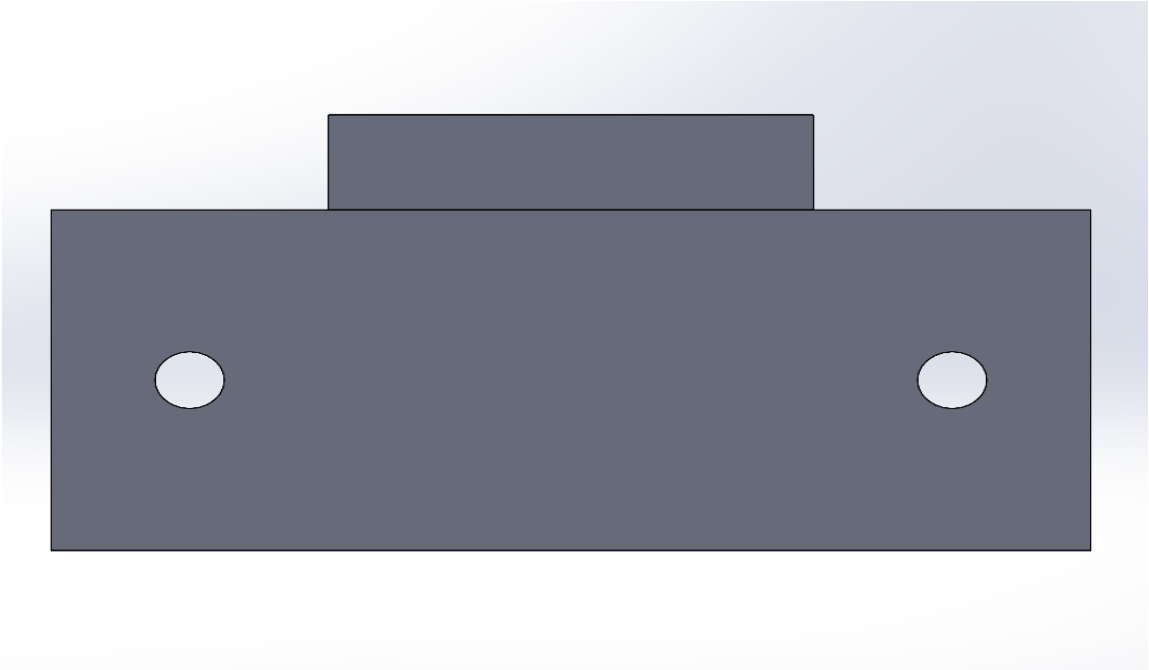

Back view

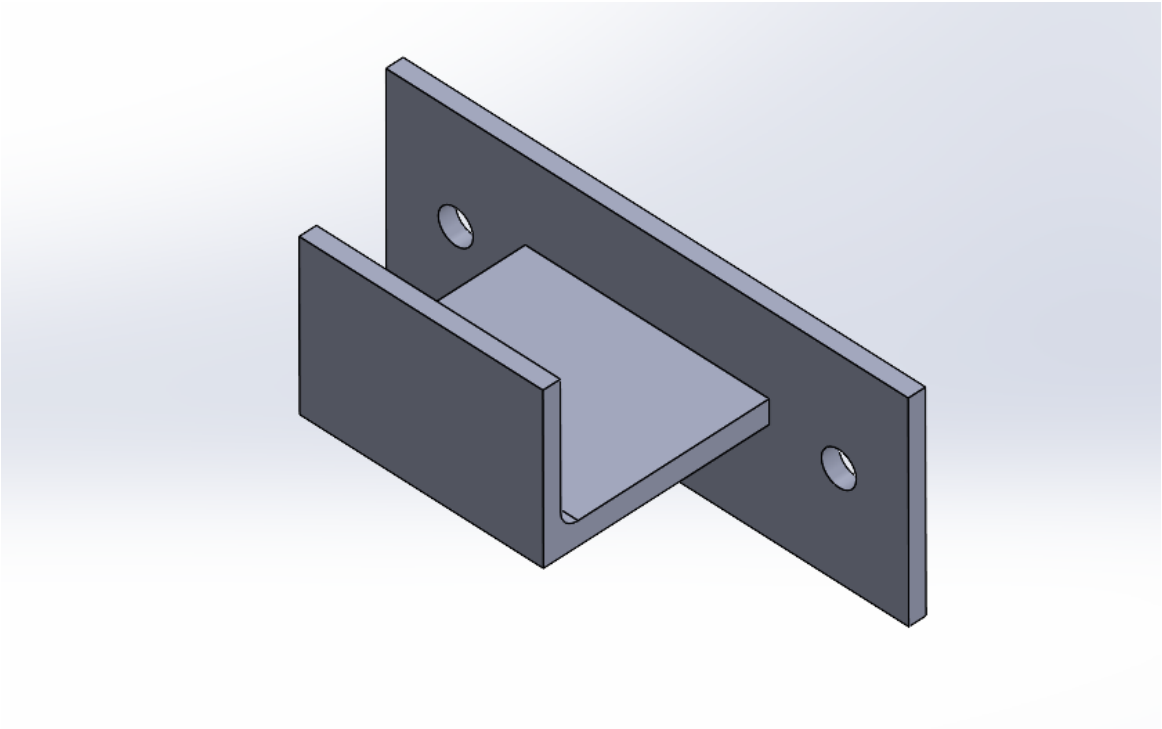

SolidWorks 3D Model

Methodology

The SolidWorks model was imported into ANSYS for finite element analysis. Boundary conditions were applied by fixing the surfaces around the holes, representing a rigid connection to a support structure. A uniformly distributed load of 100 N/cm² was applied downward on the top surface of the horizontal section of the bracket. A finite element mesh was generated to discretize the model. Mesh refinement was applied near the holes and fillet regions to improve accuracy in areas where stress concentration is expected.

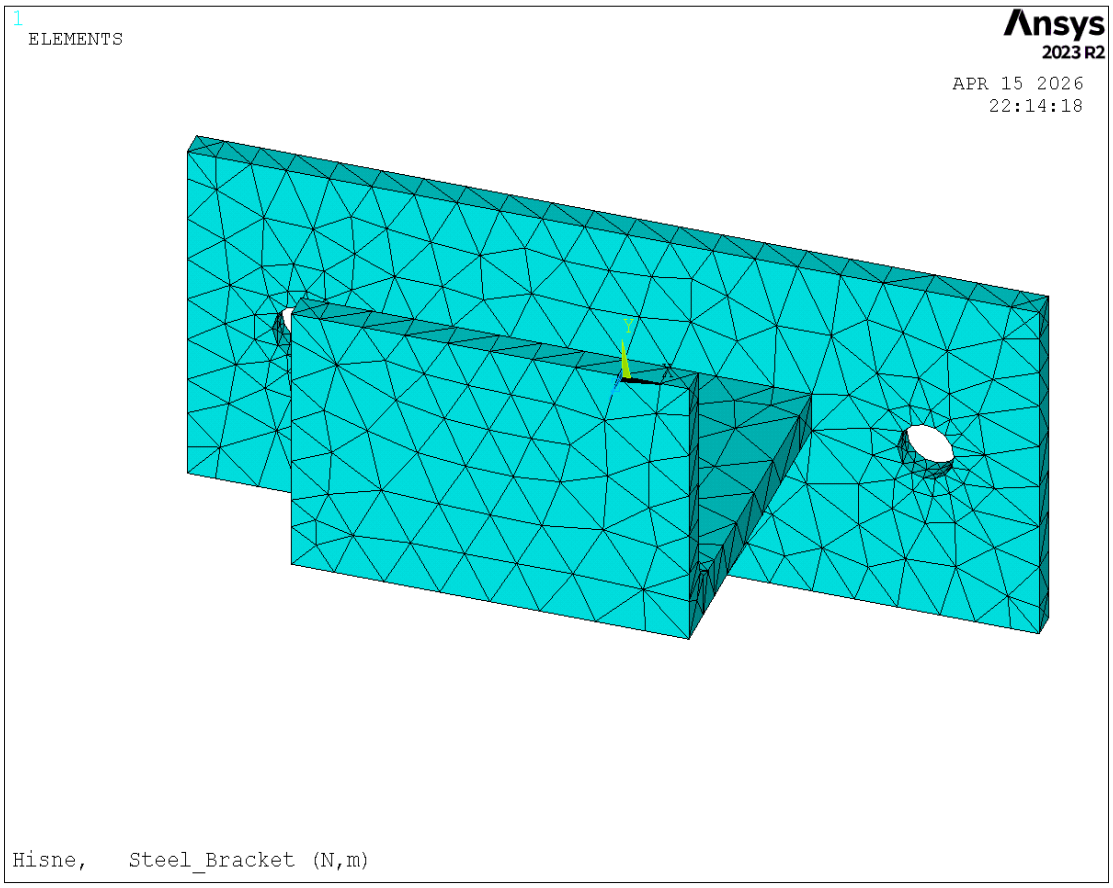

Finite element mesh of the structure

Results and Discussion

From ANSYS output:

Stress (SEQV)

- Maximum Stress (SMX) = 3.53×10^8 Pa (353 MPa)

- Minimum Stress (SMN) = 10.9641 Pa

Displacement (USUM)

- Maximum Displacement (DMX) = 1.16×10^{-3} m (1.16 mm)

The stress contour shows maximum stress concentrated near the fillet and hole regions, indicating stress concentration. The deformation plot shows maximum displacement at the free end, consistent with cantilever behavior.

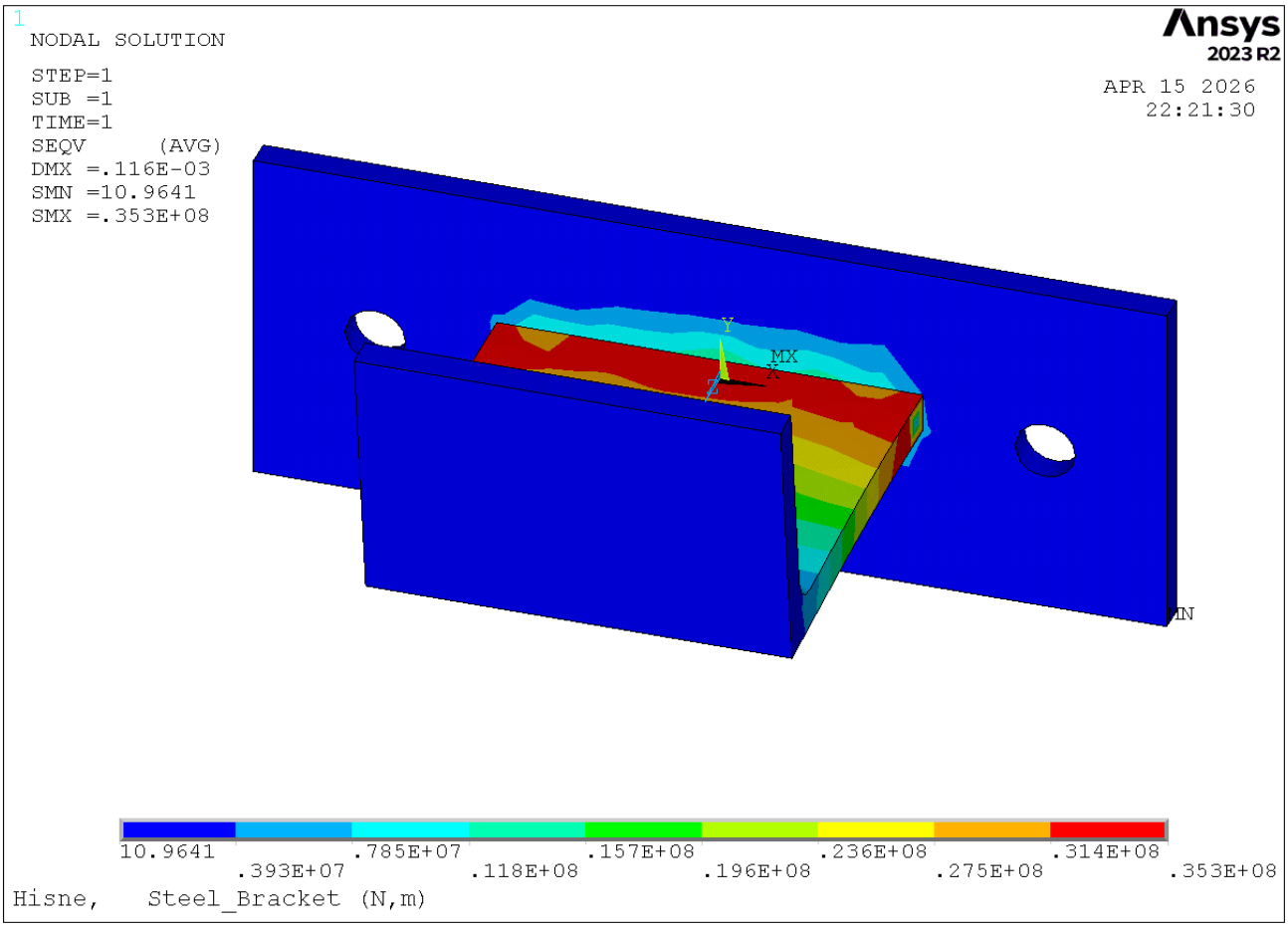

Von Mises Stress distribution

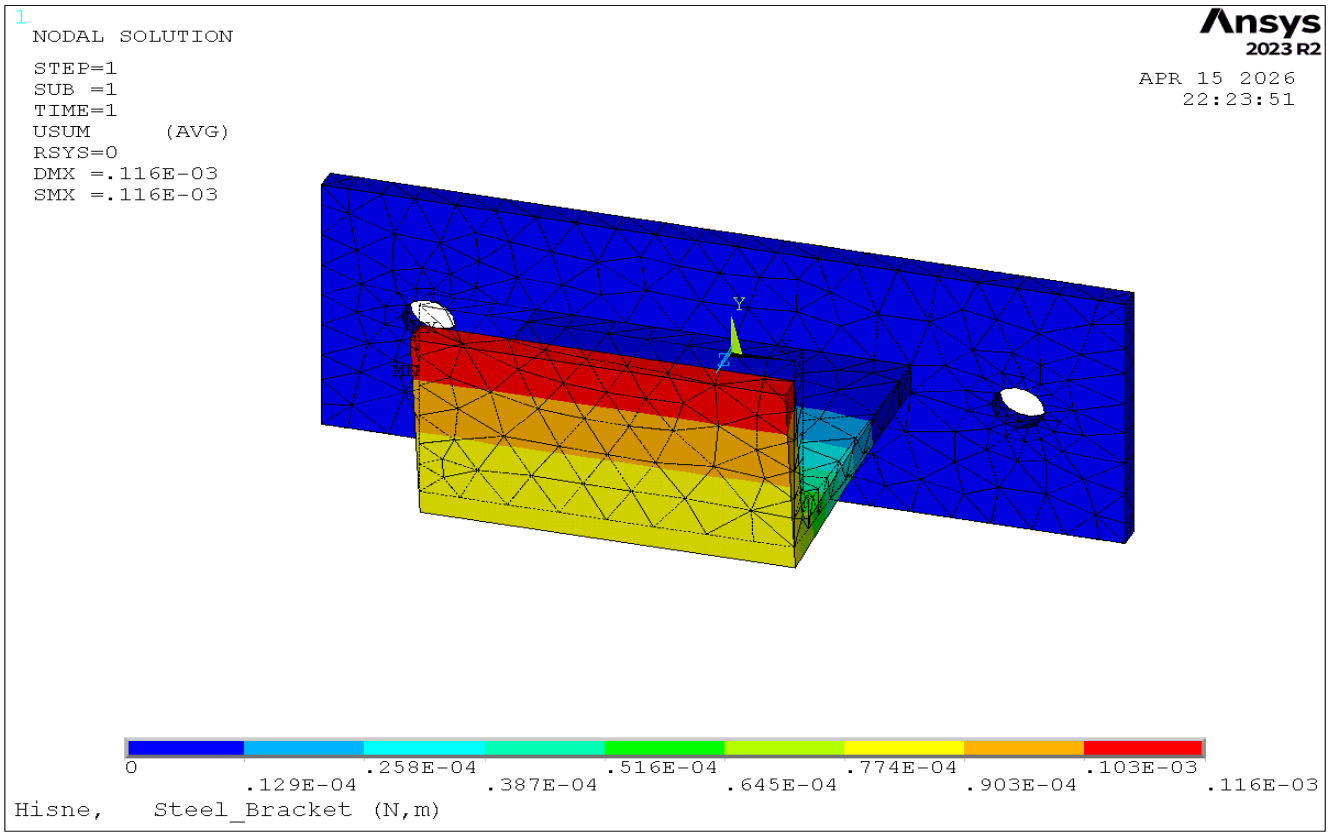

Total deformation of the structure

Discussion

The high stress at the fillet and holes is caused by geometric discontinuities, which amplify local stress. These regions are the most critical for failure.

The displacement distribution confirms expected structural response, where deformation increases away from the fixed support.

Conclusion

The bracket experiences significant stress concentration near critical regions. Design improvements such as increasing fillet radius or thickness can reduce stress and improve structural performance.