GATE

Be sure with Vidyalankar Since 1960

Pearl Centre, S.B. Marg, Dadar (W), Mumbai – 400 028. Tel. 4232 4232

EC : Electronics and Communications
Analog Circuits

INDEX

Sr. No.	Contents	Topics	Pg. No.
1.	**Diode Applications**		
	Notes	Introduction	1
		The Load–Line Concept	1
		Small–Signal Equivalent Circuit	5
		AND/OR Gate	6
		Clippers	6
		Clampers	13
		Rectifier	13
		Performance Parameters	18
		Advantages and Disadvantages	22
		Voltage Multiplier Circuit	22
		List of Formulae	24
		LMR (Last Minute Revision)	24
	Assignment–1	Questions	26
	Test Paper–1	Questions	32
2.	**Biasing Techniques**		
	Notes	Introduction	36
		Load Line Concept	37
		Comparison of Basic Bias circuits	38
		Bias Compensation	44
		Metal Oxide Field Effect Transistor (MOSFET)	48
		List of Formulae	49
		LMR (Last Minute Revision)	50
	Assignment–2	Questions	51
	Test Paper–2	Questions	57

Sr. No.	Contents	Topics	Pg. No.
3.	**Amplifiers**		
	Notes	Single Stage Transistor Amplifier	**61**
		Single Stage FET Amplifier	**79**
		Multistage Amplifier	**89**
		Differential Amplifier	**97**
		Operational Amplifier	**107**
		Feedback Amplifier	**123**
		Power Amplifier	**142**
		List of Formulae	**167**
		LMR(last Minute Revision)	**169**
	Assignment–3	Questions	**180**
	Test Paper–3	Questions	**183**
4.	**Frequency Response**		
	Notes	Introduction	**186**
		Low Frequency Response Analysis	**187**
		High Frequency Response Analysis	**195**
		Multi Stage Frequency Effects	**203**
		List of Formulae	**205**
		LMR (Last Minute Revision)	**207**
	Assignment–4	Questions	**208**
	Test Paper–4	Questions	**212**
5.	**OP-AMP Applications**		
	Notes	Inverting Configuration	**216**
		Non –Inverting Configuration	**217**
		Differentiator	**220**
		Integrator	**223**
		Current to Voltage Converter (Transresistance Amplifier)	**226**
		Voltage to Current Converter	**227**
		Current Amplifiers	**229**
		Difference Amplifier	**230**
		Instrumentation Amplifier	**232**
		Logarithmic Amplifier	**234**
		Antilog Amplifier	**236**
		Operational Transconductance Amplifier (OTA)	**238**

Sr. No.	Contents	Topics	Pg. No.
		Voltage Comparators	238
		Comparator Applications	241
		Schmitt Trigger	244
		Precision Rectifier	248
		Sample and Hold Amplifiers	252
		List of Formulae	254
		LMR (Last Minute Revision)	256
	Assignment–5	Questions	257
	Test Paper–5	Questions	261
6.	**Miscellaneous**		
	Notes	Function Generator	264
		Oscillators	273
		Filters	288
		Power Supplies	300
		List of Formulae	313
	Assignment – 6	Questions	317
	Test Paper – 6	Questions	320
Practice Problems			323
SOLUTIONS			
Assignment		Answer Key	334
		Model Solutions	336
Test Paper		Answer Key	359
		Model Solutions	361
Practice Problems		Answer Key	378
		Model Solutions	379

Topic 1 : Diode Applications

INTRODUCTION

In ideal diode, the current flows only in one direction. This property of diode is widely used in rectification and waveshaping. The ideal diode can also be used as a switch. Consider the normal diode as shown in figure.

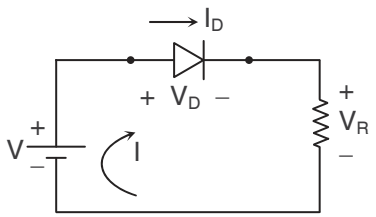

(a) Circuit

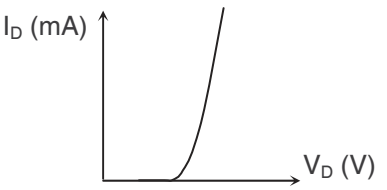

(b) Characteristics

THE LOAD–LINE CONCEPT

Consider a simple series diode configuration

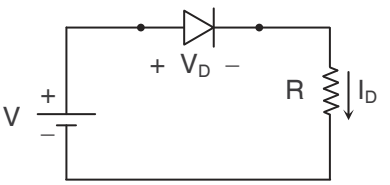

Applying KVL, we get

$$V - V_D - I_D R = 0$$

$$\therefore \quad I_D = \frac{1}{R}V - \frac{1}{R}V_D$$

$$\therefore \quad I_D = -\frac{1}{R}V_D + \frac{1}{R}V \qquad \text{.... (1)}$$

This equation is equivalent to y = mx + c

where $y = I_D, \quad m = -\frac{1}{R}, \quad c = \frac{V}{R} \rightarrow \text{constant}$

The equation (1) defines a straight line.

If graphical analysis is done, then a straight line can be drawn on device characteristics that represent the applied load as shown in the figure.

> The point of intersection of load line and the diode characteristics is called as operating point or quiescent point or Q–point.

The applied load has impact on the diode operating point. Such a analysis is called as load–line analysis.

The diode characteristic with load line is as shown below:

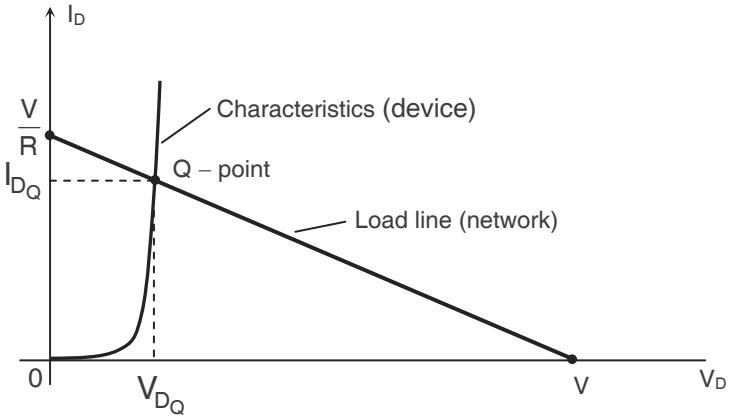

Fig. Drawing the load line and finding the point of operation.

In equation (1), if $V_D = 0,\ I_D = \left.\frac{V}{R}\right|_{V_D=0\,V}$

if $I_D = 0,\ V_D = V\big|_{I_D=0}$

The variation in load line to variation in V or R is as shown below:

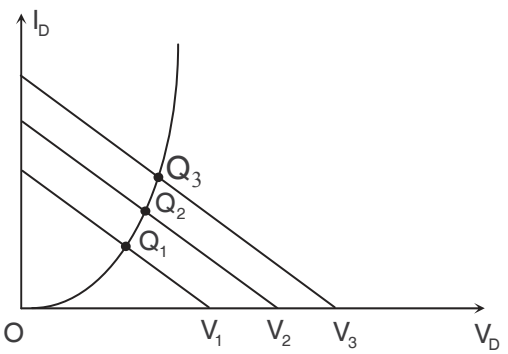

$V_1 < V_2 < V_3$ with R constant

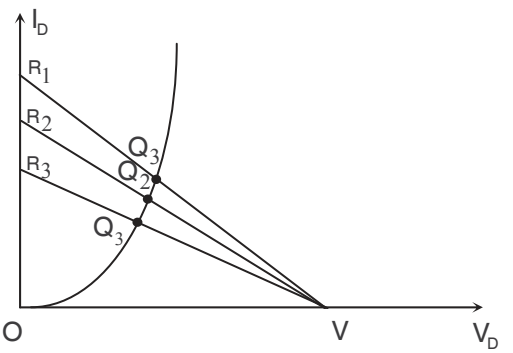

$R_1 < R_2 < R_3$ with V constant

When V increases (decreases), I_{DQ} also increase (decreases) with R constant.
When R increases (decreases), I_{DQ} decreases (increases) with V constant.

AC Equivalent Circuit

Ac, characteristics of the p-n junction become important, because sinusoidal signals may be superimposed on the dc currents and voltages. The following sections examine these ac characteristics.

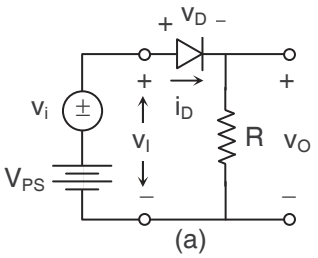

(a)

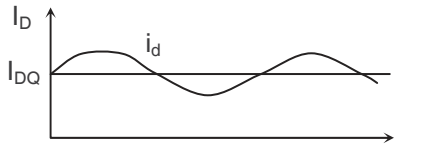

(b)

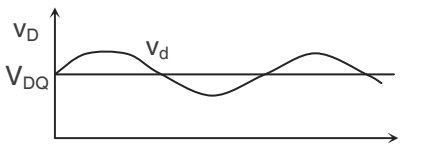

(c)

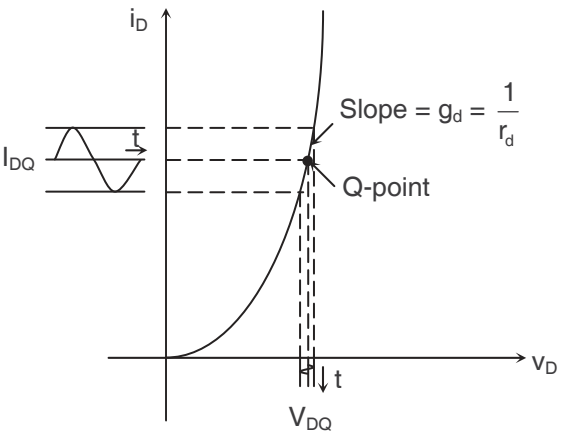

(d) forward-biased diode I-V characteristics with a sinusoidal current and voltage superimposed on the quiescent values

Current-Voltage Relationships

Since the input voltage contains a dc component with an ac signal superimposed, the diode current will also contain a dc component with an ac signal superimposed, as shown in above figure (b). In addition, the diode voltage will contain a dc value with an ac signal superimposed, as shown in figure (c). For this analysis, assume that the ac signal is small compared to the dc component, so that a linear ac model can be developed from the nonlinear diode.

The relationship between the diode current and voltage can be written as

$$i_D \cong I_S e^{\left(\frac{v_D}{V_T}\right)} = I_S e^{\left(\frac{V_{DQ}+v_d}{V_T}\right)} \qquad \ldots(1)$$

where V_{DQ} is the dc quiescent voltage and v_d is the ac component. We are neglecting the –1 term in the diode equation. Equation (1) can be rewritten as

$$i_D = I_S \left[e^{\left(\frac{V_{DQ}}{V_T}\right)}\right]\left[e^{\left(\frac{v_d}{V_T}\right)}\right] \qquad \ldots(2)$$

If $v_d << V_T$, and we can expand the exponential function into a linear series, follows :

$$e^{\left(\frac{v_d}{V_T}\right)} \cong 1 + \frac{v_d}{V_T} \qquad \ldots(3)$$

We may also write the quiescent diode current as

$$I_{DQ} = I_S e^{\left(\frac{V_{DQ}}{V_T}\right)} \qquad \ldots(4)$$

The diode current–voltage relationship from equation (2) can then be written as

$$i_D = I_{DQ}\left(1 + \frac{v_d}{V_T}\right) = I_{DQ} + \frac{I_{DQ}}{V_T}.v_d = I_{DQ} + i_d \qquad \ldots(5)$$

where i_d is the ac component of the diode current. The relationship between the ac components of the diode voltage and current is then

$$i_d = \left(\frac{I_{DQ}}{V_T}\right).v_d = g_d.v_d \qquad \ldots(6(a)) \qquad \textbf{OR} \quad v_d = \left(\frac{V_T}{I_{DQ}}\right).i_d = r_d.i_d \qquad \ldots(6(b))$$

The parameters g_d and r_d, respectively, are the diode **small-signal incremental conductance** and **resistance**, also called the **diffusion conductance** and **diffusion resistance**. We see these two equations that

$$r_d = \frac{1}{g_d} = \frac{V_T}{I_{DQ}} \qquad \ldots(7)$$

This equation tells us that the incremental resistance is a function of the dc bias current I_{DQ} and is inversely proportional to the slope of the I–V characteristics curve, as shown in above figure (d).

Circuit Analysis

To analyze the circuit shown in the above figure (a), we first perform a dc analysis and then an ac analysis. These two types of analyses will use two equivalent circuits. Following figure (a) is the dc equivalent circuit that we have seen previously. If the diode is forward biased, then the voltage across the diode is the piecewise linear turn-on voltage. Figure (b) is the ac equivalent circuit. The diode has been replaced by its equivalent resistance r_d. All parameters in this circuit are the small-signal time-varying parameters.

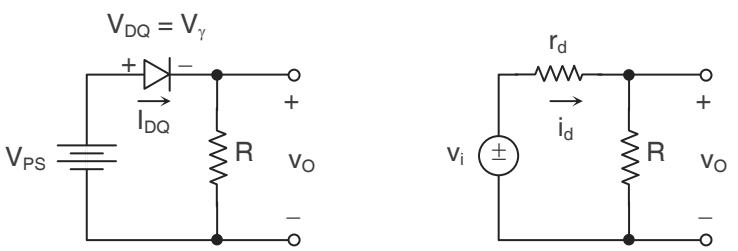

(a) (b)

EXAMPLE 1 :

Analyze the circuit shown below

Assume V_{PS} = 5 V, R = 5 kΩ, V_γ = 0.6 V, and v_i = 0.1 sin ωt (V).

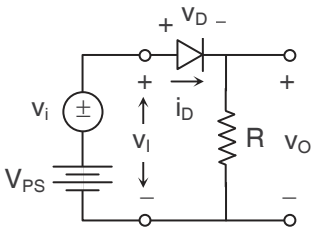

Solution :

(i) DC analysis (v_i = 0) then the circuit becomes as shown in above figure (a).

$$I_{DQ} = \frac{V_{PS} - V_\gamma}{R} = \frac{5 - 0.6}{5} = 0.88\text{mA}$$

$$V_o = I_{DQ}R = (0.88)(5) = 4.4 \text{ V}$$

(ii) AC analysis (V_{PS} = 0) then the circuit becomes as shown in above figure (b).

$$v_i = i_d r_d + i_d R = i_d(r_d + R)$$

$$r_d = \frac{V_T}{I_{DQ}} = \frac{0.026}{0.88} = 0.0295 \text{ k}\Omega$$

$$i_d = \frac{v_i}{r_d + R} = \frac{0.1\sin\omega t}{0.0295 + 5} \Rightarrow 19.9\sin\omega t(\mu A)$$

$$v_o = i_d R = 0.0995\sin\omega t(V)$$

Note : Separate equivalent circuit models must be used for each analysis.

SMALL–SIGNAL EQUIVALENT CIRCUIT

The small-signal equivalent circuits of the forward-biased p-n junction is shown in figure (next page) and is developed partially from the equation for the admittance, which is given by

$$Y = g_d + j\omega C_d$$

where $g_d = 1/r_d$ = diffusion conductance

$$C_d = \frac{dQ}{dV_D} = \text{diffusion capacitance.}$$

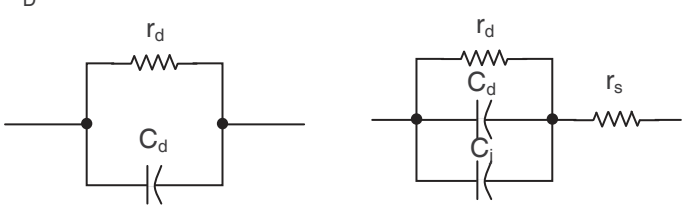

(a) **(b)**

Small-signal equivalent circuit of the diode
(a) Simplified version and (b) complete circuit

The small-signal equivalent circuit of the p-n junction is used to obtain the ac response of a diode circuit subjected to ac signals superimposed on the Q-point values. Small-signal equivalent circuits of p-n junction are also used to develop small-signal models of transistors, and these models are used in the analysis and design of transistor amplifiers.

AND/OR GATE

Series or parallel configuration of diodes can be used as positive logic AND / OR gate. Consider the connection as shown in the figure.

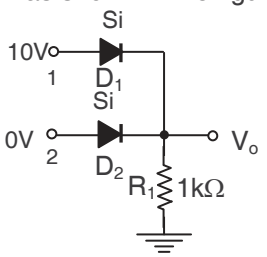

Fig. Positive logic OR gate.

The circuit is a positive logic OR gate.

- Terminal 1 = high potential and terminal 2 grounded then V_o will be logic 1.

> The output voltage level will be logic 1 if either or both inputs are 1 and the output will be 0 if both inputs are zero.

CLIPPERS

The circuit which has an ability to clip certain portion of input signal without changing or distorting the remaining portion of signal is called as clipper.

Figure shows the general voltage transfer characteristics of a limiter circuit. The limiter is a linear circuit if the input signal is in the range $V_O^- / A_v \le v_1 \le V_O^+ / A_v$, where A_v is the slope of the transfer curve. If $A_v \le 1$, as in diode circuits, the circuit is a passive limiter. If $v_I > V_O^+ / A_v$, the output is limited to a maximum value of V_O^+. Similarly, if $v_I < V_O^- / A_v$, the output is limited to a minimum value of V_O^-.

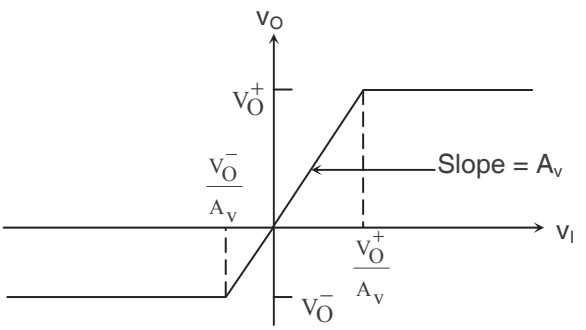

General voltage transfer characteristics of a double limiter circuit

Various combinations of V_O^+ and V_O^- are possible. Both parameters may be positive, both may be negative, or one may be positive while the other negative, as indicated in the figure. If either V_O^- approaches minus infinity of V_O^+ approaches plus infinity, then the circuit reverts to a single limiter.

Types of Clippers

Series Clippers

The simple circuit consists of diode and a load resistance as shown in the figure. Consider the diode to be ideal.

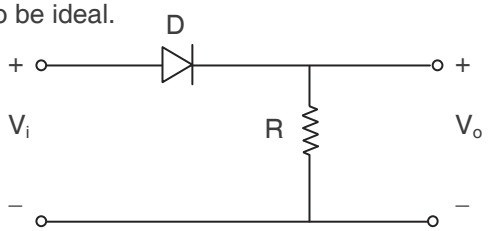

Suppose sinusoidal input is given to the circuit

Case (i): *Positive half cycle of input.*

∴ The diode D is ON, forward biased

∴ Entire input voltage appears across the resistor R

∴ $V_o = V_i$

Case (ii): *Negative half cycle of input*

∴ Diode D is reversed biased and D is OFF i.e. open

∴ Circuit voltage resistor R is 0. Since no current flows through the circuit,

Hence no drop across resistor

∴ $V_o = 0$

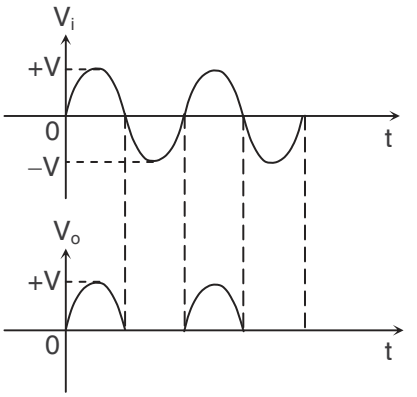

(A) Series Clipper with dc supply

Consider silicon diode with forward cut in voltage of 0.7 V.

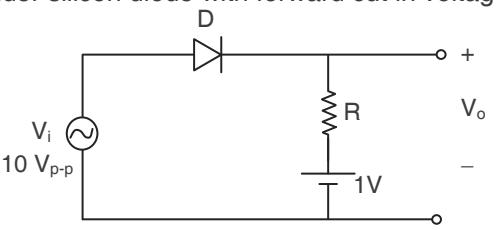

Positive half cycle:

- If $V_i \leq$ 1V, Diode OFF, no current through circuit
  ($\because$ cathode of diode is at higher potential than anode)
  $\therefore$ output V_o = DC reference supply = 1V
- If $V_i \geq (1 + 0.7)$, Diode ON forward biased and current flows through the circuit.
  $\therefore$ output voltage V_o = directly proportional to input voltage.

Negative half cycle:

- Diode becomes reverse biased under any condition. Diode OFF, so no current through the circuit and output is same as dc reference supply of 1V.

Waveform

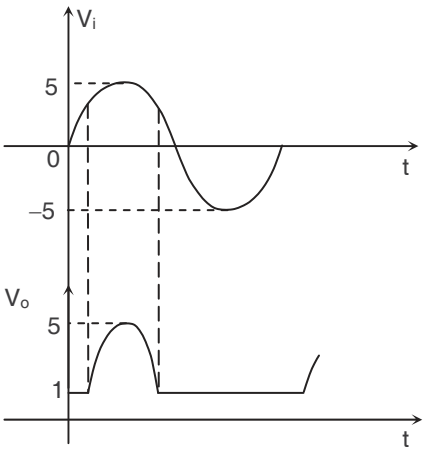

(B) Examples of Series Clippers

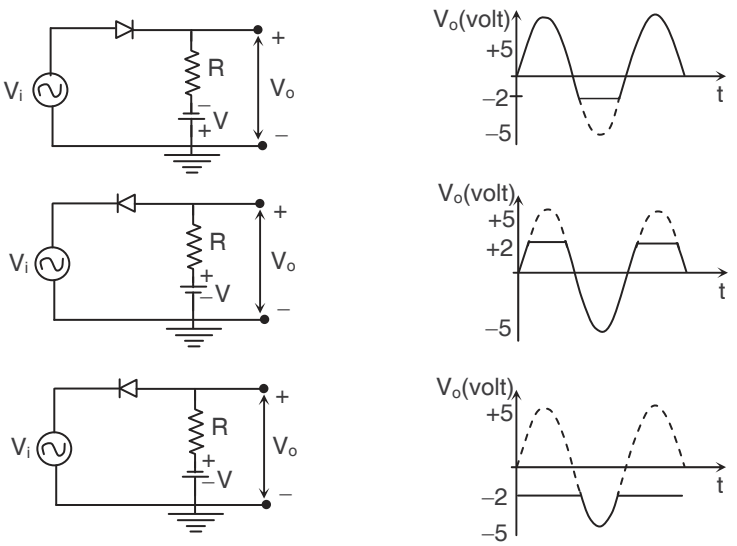

Fig. Series clippers.

Parallel Clippers

Consider a simple diode circuit with ideal diode as shown.

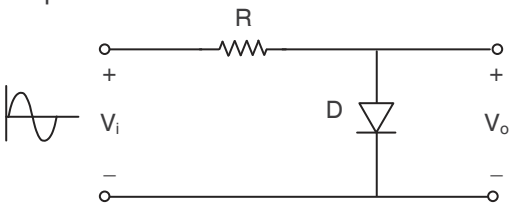

Positive half cycle

Diode is forward biased i.e. ON state.

Hence output voltage will be grounded i.e. $V_o = 0$ V

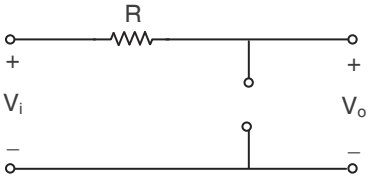

Negative half cycle

Diode is reversed biased i.e. OFF

Hence open circuit is created as shown

Hence input is directly transferred to the output.

$\therefore \quad V_o = V_i$

Waveform:

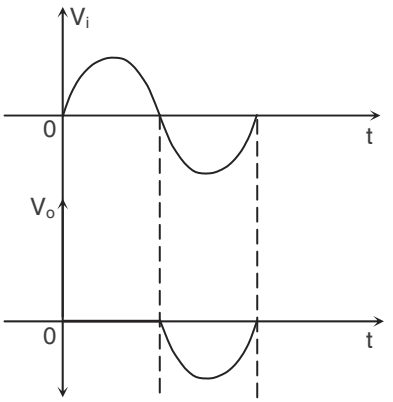

Parallel Clipping with DC Reference Supply

Consider circuit as shown below:

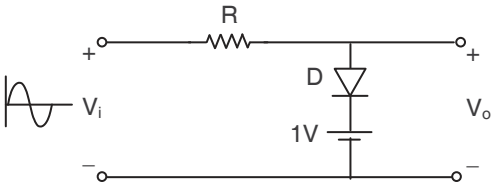

Positive half cycle:

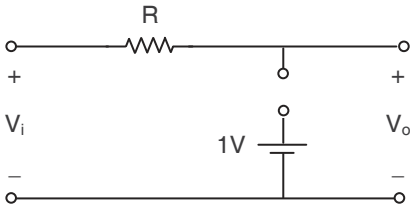

- $V_i \leq 1$ V
  Diode is reversed biased, OFF

  $\therefore$ no current through the circuit.

  $\therefore$ Input appears directly at the output.

  $\therefore$ $V_i = V_o$

- $V_i \geq 1$V
  Diode forward biased.

> Input voltage has to be greater than 1 + 0.7 = 1.7 V to forward bias the diode.

Current flows in the parallel form.

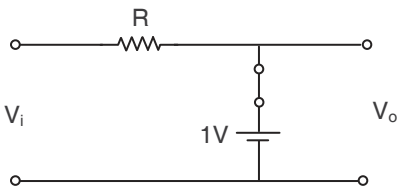

$\therefore$ We have output voltage as 1V.

Negative half cycle:

Diode is always reversed biased. Hence input will directly appear across the output voltage.

Waveform

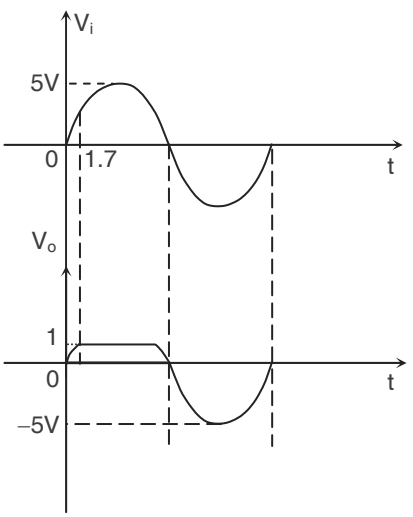

Other Parallel Clipping Circuits

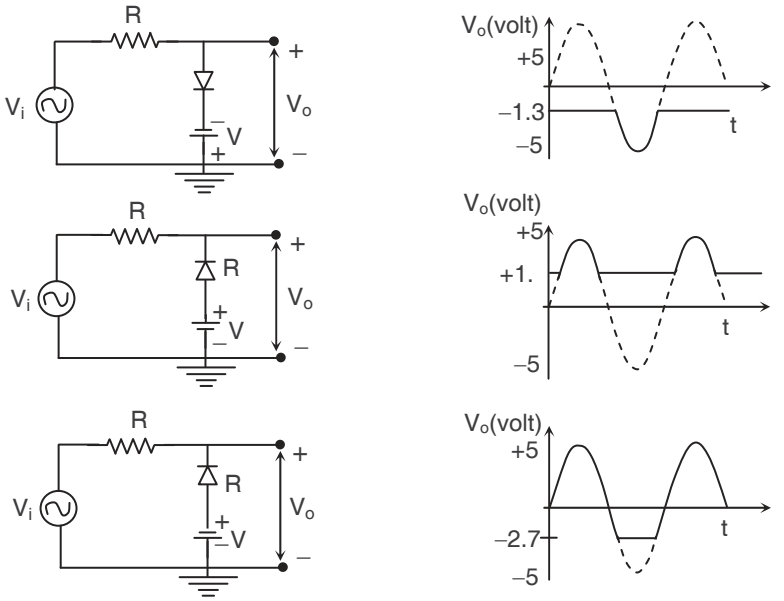

Fig. Parallel clippers.

Double Ended Clipper

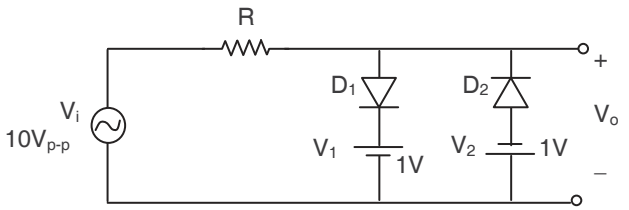

Double ended clipper is of form of parallel or shunt clipping circuit.

Positive half cycle

- $V_i \leq 1V$
  Diode D_1 is reverse biased, OFF
  Diode D_2 is reverse biased, OFF
  Current does not flow through the branch as shown.

  Both the diodes are reverse biased.
  ∴ Input appears directly at the output.
  $V_o = V_i$

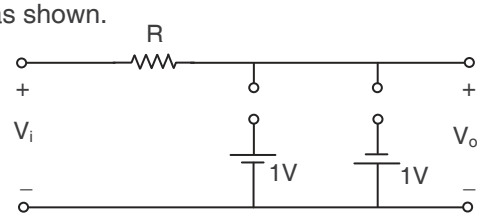

- $V_i > (1V + 0.7)$
  Diode D_1 is forward biased, ON state, short circuit

  Diode D_2 is reversed biased, OFF state, open circuit

  Current flows through branch 1 only

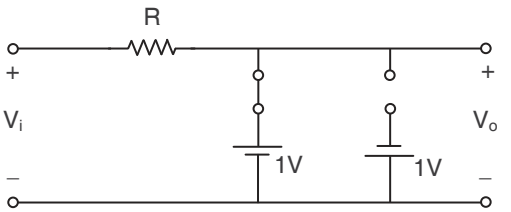

$\therefore$ Output voltage is 1V.

Negative half cycle:

- $V_i > -1$ V (i.e. 0, 1, 2 ….V)
  Diode D_1 is reversed biased, OFF state, open circuit
  Diode D_2 (Cathode at higher potential than anode)
  $\therefore$ Reversed biased, OFF state, open circuit

- $V_i < -1$ V (i.e. –2. –3, …..,V)
  Diode D_1 : Always reversed biased, OFF state, open circuit.
  Diode D_2 : Forward biased, ON state, short circuit.
  Current flows through 2nd branch.

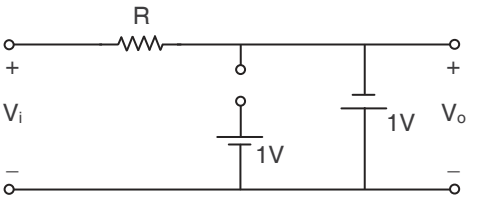

$\therefore$ Output is 1V.

Waveform

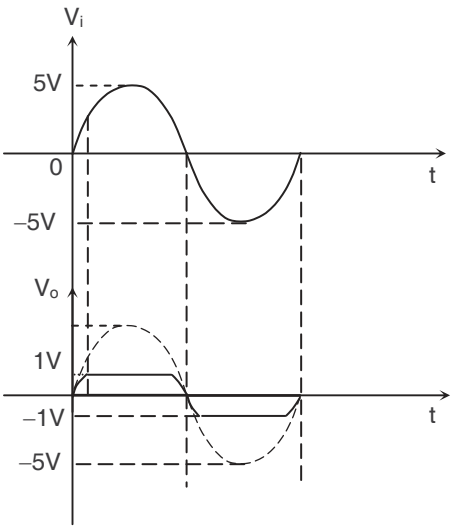

During negative half cycle, diode D_1 is always reverse biased.

CLAMPERS

Clamping shifts the entire signal voltage by a dc level. In steady state, the output waveform is an exact replica of the input waveform, but the output signal is shifted by a dc value that depends on the circuit. The distinguishing feature of a clamper is that it adjusts the dc level without needing to know the exact waveform.

Consider circuit shown in figure (a)

(i) During positive half cycle diode D forward biased. Therefore capacitor C will charge up to V_M with the polarity as shown in the figure.

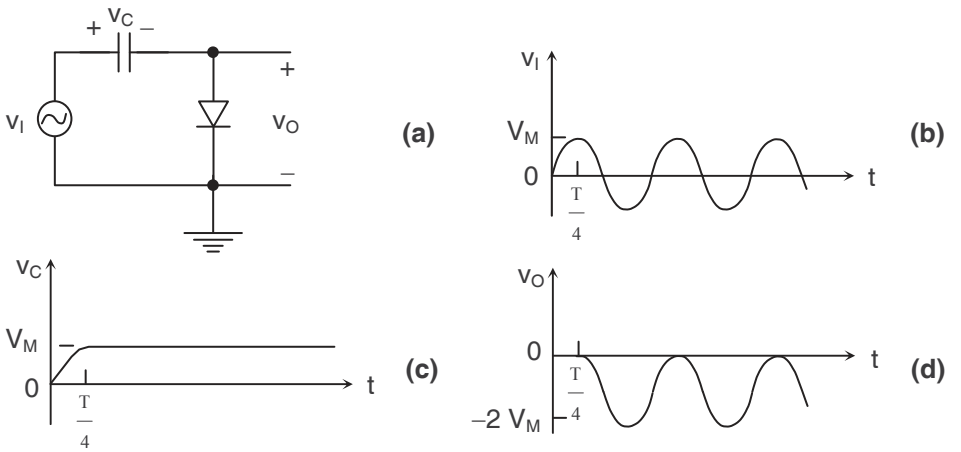

The capacitor and output voltage are shown in above figure (c) and (d). The output voltage is "clamped" at zero volts, that is, $v_O \leq 0$. In steady state, the waveforms of the input and output signals are the same, and the output signal is shifted by a certain dc level compared to the input signal.

RECTIFIER

Rectifier converts sinusoidal voltage to pulsating dc signal i.e. it converts ac input to pulsating dc output. In other words the alternating waveform from the power line is converted into direct voltage.

1. Half Wave Rectifier

The basic circuit of half wave rectifier is as shown below

Consider diode D is ideal

$\therefore$ V_r : Cut in voltage = 0 V

R_f : Forward resistance = 0 V

R_r : Reverse resistance = ∞

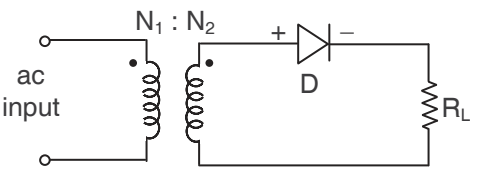

During positive half cycle

Diode forward biased, ON state.
Current flows through the circuit and we get output V_o across the load.

During negative half cycle

Diode reversed biased, OFF state, open circuit.
No current flow through the circuit and output voltage is zero.

Note: The output current is unidirectional

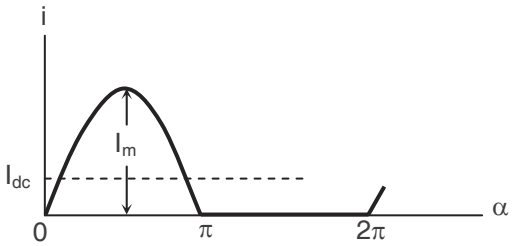

Diode and load current i.

2. Full Wave Rectifier

It is classified as center tapped full wave rectifier and bridge rectifier.

- **Centre tapped transformer Full wave rectifier**

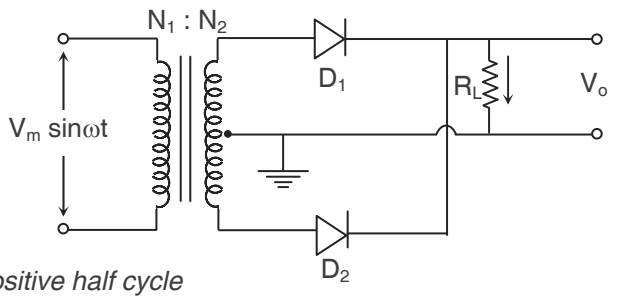

During positive half cycle

The polarities of the diodes are as shown

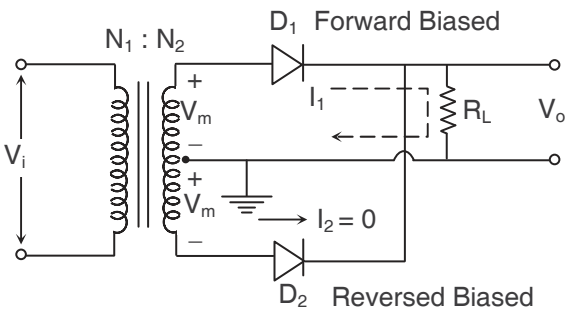

Diode D_1 is forward biased, ON state
Diode D_2 is reverse biased, OFF state
Current flows in the circuit in the direction as shown.
The voltage drop is obtained across the load resistance.

During negative half cycle

The diode polarities are as shown in figure

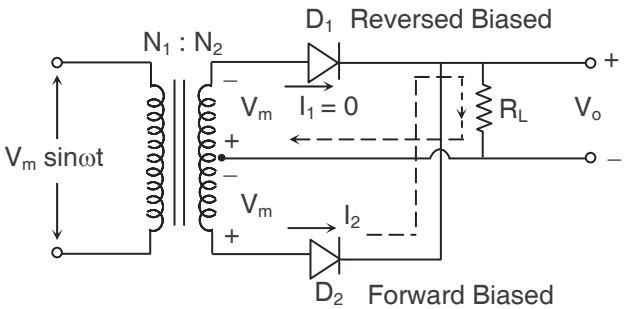

Diode D_1 is reversed biased, OFF state

Diode D_2 is forward biased, ON state

The current flows in the external circuit as shown.

> Both the currents, due to positive half cycle and negative half cycle, are in the same direction through the load R_L. Hence current is unidirectional.

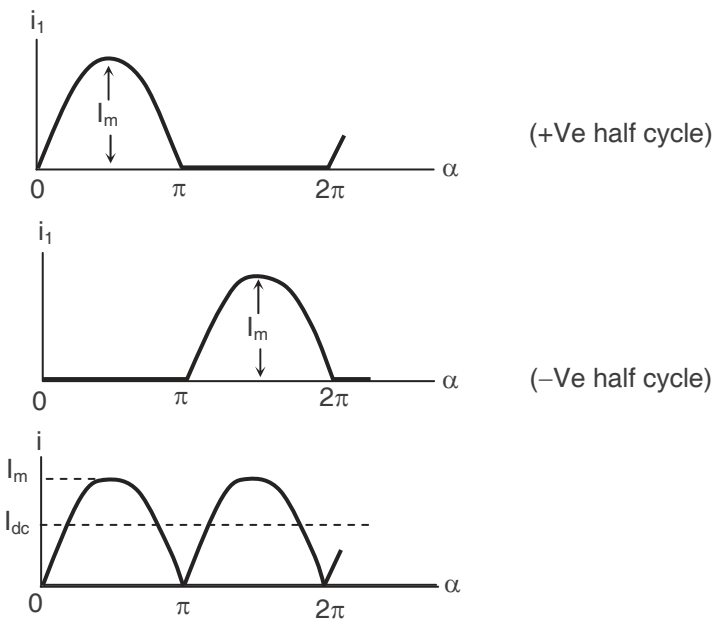

Fig. The diode current i_1 and i_2 and the load current i. The output voltage is $V_o = i\ R_L$

3. Bridge Rectifier

Centre tapped transformers has certain disadvantages

- It is bulky
- It is costly
- It is difficult to adjust centre point accurately
- Voltage at secondary is $2V_m$ for each cycle while the output is only V_m.

Circuit (Bridge Rectifier)

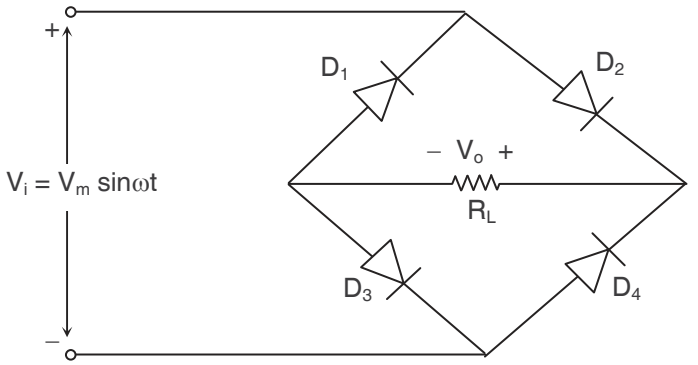

During positive half cycle

The diode polarities will be as shown

Diode D_1 is reverse biased, OFF state

Diode D_2 is forward biased, ON state

Diode D_3 is forward biased, ON state

Diode D_4 is reverse biased, OFF state

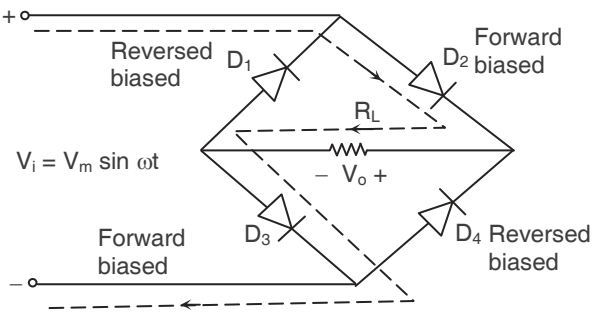

Current flows through the load resistance having the direction as shown and voltage drop appears and we get the output voltage across resistance R_L.

During negative half cycle

The diode polarities are as shown

Diode D_1 is forward biased, ON state

Diode D_2 is reversed biased, OFF state

Diode D_3 is reversed biased, OFF state

Diode D_4 is forward biased, ON state

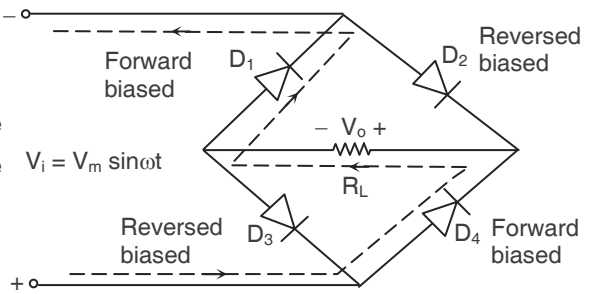

Current flows through the load resistance in the direction as shown in the figure above.

$\therefore$ We, get output voltage across R_L during both half-cycles with same polarity.

Waveforms :

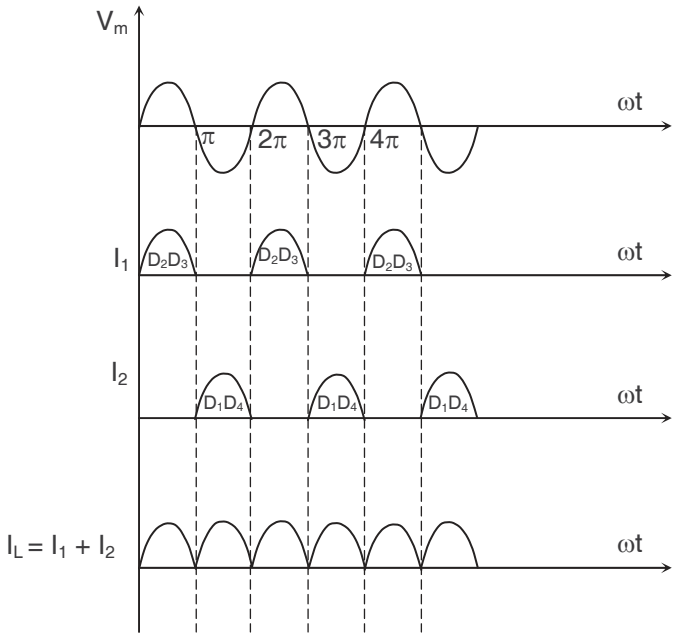

EXAMPLE :

Compare voltage and the transformer turns ratio in two full-wave rectifier circuits. (Refer figure of center-tapped and bridge rectifier). Assume the input voltage is from a 120 V (rms), 60 Hz ac source. The desired peak output voltage v_O is 9 V, and the diode cut-in voltage is assumed to be $V_\gamma = 0.7$ V.

Solution :

(i) Center-tapped full-wave rectifier :

$$v_S\,(\max) = v_O\,(\max) + V_\gamma = 9 + 0.7 = 9.7 \text{ V}$$

$$v_{S,rms} = \frac{9.7}{\sqrt{2}} = 6.86\text{V}$$

The turns ratio of the primary to each secondary winding must then be

$$\frac{N_1}{N_2} = \frac{120}{6.86} \cong 17.5$$

$$\text{PIV} = v_R\,(\max) = 2\,v_S\,(\max) - V_\gamma = 2(9.7) - 0.7 = 18.7 \text{ V}$$

(ii) Full-wave bridge rectifier :

$$v_S\,(\max) = v_O\,(\max) + 2V_\gamma = 9 + 2(0.7) = 10.4 \text{ V}$$

$$v_{S,rms} = \frac{10.4}{\sqrt{2}} = 7.35\text{V}$$

The turns ratio should then be

$$\frac{N_1}{N_2} = \frac{120}{7.35} \cong 16.3$$

PIV = v_R (max) = v_S (max) – V_γ = 10.4 – 0.7 = 9.7 V

Comment : These calculations demonstrate the advantages of the bridge rectifier over the center-tapped transformer circuit. First, only half as many turns are required for the secondary winding in the bridge rectifier. This is true because only half of the secondary winding of the center-tapped transformer is utilized at any one time. Second, for the bridge circuit, the peak inverse voltage that any diode must sustain without break-down is only half that of the center-tapped transformer circuit.

PERFORMANCE PARAMETERS

1. Average or DC value

- For Half Wave Rectifier

$$I_{dc} = \frac{1}{2\pi}\int_0^{2\pi} I_L \, d\omega t \qquad \text{.... (1)}$$

$$I_L = I_m \sin\omega t; \qquad 0 < \omega t < \pi$$

$$= 0; \qquad \pi < \omega t < 2\pi$$

After solving we will get

$$I_{dc} = \frac{I_m}{\pi} \qquad \text{where } I_m = \text{peak amplitude}$$

Similarly,

$$V_{dc} = \frac{V_m}{\pi}$$

- For Full Wave Rectifier

$$I_L = +I_m \sin\omega t; \qquad 0 < \omega t < \pi$$

$$= -I_m \sin\omega t; \qquad \pi < \omega t < 2\pi$$

Substituting in equation (1)

∴ We get,

$$I_{dc} = \frac{2I_m}{\pi}$$

Similarly

$$V_{dc} = \frac{2V_m}{\pi}$$

2. RMS Value

- For Half Wave Rectifier

$$I_{rms} = \sqrt{\frac{1}{2\pi}\int_0^{2\pi}(I_L)^2\, d(\omega t)}$$

$$I_L = I_m \sin\omega t\,; \qquad 0 < \omega t < \pi$$

$$= 0\,; \qquad \pi < \omega t < 2\pi$$

Solving we get,

$$I_{rms} = \frac{I_m}{2} \qquad \ldots(2)$$

$$V_{rms} = \frac{V_m}{2}$$

- For Full Wave Rectifier

$$I_L = +I_m \sin\omega t\,; \qquad 0 < \omega t < \pi$$

$$= -I_m \sin\omega t\,; \qquad \pi < \omega t < 2\pi$$

Substituting equation (2) with above values

$$\therefore \quad I_{rms} = \frac{I_m}{\sqrt{2}}$$

$$V_{rms} = \frac{V_m}{\sqrt{2}}$$

3. Ripple Factor

The unwanted ac components present in the dc output are called as ripple.

$$\text{Ripple factor} = \frac{\text{rms value of ac voltage}}{\text{dc voltage}}$$

Note: Ripple factor has no unit of measurement.

$$\text{Ripple factor} = \gamma = \frac{V_{ac}}{V_{dc}}$$

$$\gamma = \frac{\sqrt{\left(V_{rms}^2 - V_{dc}^2\right)}}{V_{dc}} = \sqrt{\left(\frac{V_{rms}}{V_{dc}}\right)^2 - 1}$$

- For Half Wave Rectifier

$$V_{rms} = \frac{V_m}{2} \quad \text{and} \quad V_{dc} = \frac{V_m}{\pi}$$

$$\therefore \quad \gamma = \sqrt{\left(\frac{\pi}{2}\right)^2 - 1} = 1.21$$

- For Full Wave rectifier

$$V_{rms} = \frac{V_m}{\sqrt{2}} \quad \text{and} \quad V_{dc} = \frac{2V_m}{\pi}$$

$$\therefore \quad \gamma = 0.483$$

4. Efficiency

Efficiency is defined as the ratio of output dc power to input ac power.

$$P_{dc} = I_{dc}^2 R_L$$

$$P_{ac} = I_{rms}^2 (R_f + R_L)$$

where R_L = load resistance

R_f = forward resistance of diode

$$\therefore \quad \eta = \frac{P_{dc}}{P_{ac}}$$

$$\eta = \frac{I_{dc}^2 R_L}{I_{rms}^2 (R_f + R_L)}$$

- For Half Wave Rectifier

$$I_{dc} = \frac{I_m}{\pi}, \quad I_{rms} = \frac{I_m}{2}$$

Solving

$$\therefore \quad \eta = \frac{4}{\pi^2} \cdot \frac{R_L}{R_f + R_L} = \frac{4}{\pi^2} \qquad (\text{if } R_f << R_L)$$

- For Full Wave Rectifier

$$I_{dc} = \frac{2I_m}{\pi}, \quad I_{rms} = \frac{I_m}{\sqrt{2}}$$

$$\therefore \quad \eta = \frac{\frac{4}{\pi^2}}{\frac{1}{2}} \cdot \frac{R_L}{(R_L + R_f)}$$

$$\eta = \frac{8}{\pi^2} \cdot \frac{R_L}{R_L + R_f} = \frac{8}{\pi^2} \qquad (R_f << R_L)$$

5. Form Factor (FF)

It is the ratio of rms of value of to average value

$$FF = \frac{V_{rms}}{V_{dc}}$$

- For Half Wave Rectifier

$$V_{rms} = \frac{V_m}{2}, \quad V_{dc} = \frac{V_m}{\pi}$$

$$\therefore \quad FF = \frac{\pi}{2} = 1.57$$

- For Full Wave Rectifier

$$V_{rms} = \frac{V_m}{\sqrt{2}}, \qquad V_{dc} = \frac{2V_m}{\pi}$$

$$\therefore \quad FF = \frac{\pi}{2\sqrt{2}} = 1.11$$

6. Peak Factor (PF)

It is defined as ratio of peak value to rms value.

$$PF = \frac{V_m}{\left(\frac{V_m}{2}\right)} = 2 \quad : \quad \text{For Half Wave Rectifier}$$

$$PF = \frac{V_m}{\left(\frac{V_m}{\sqrt{2}}\right)} = \sqrt{2} \quad : \quad \text{For Full Wave Rectifier}$$

7. Peak Inverse Voltage

It is the maximum voltage to which the diode can be subjected. It is defined as the reverse biased voltage that the diode can withstand.

> Peak inverse voltage comes into picture only when the diode is non-conducting.

Determining PIV rating for Half Wave Rectifier

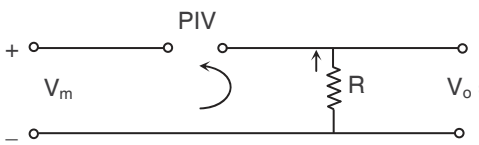

$V_o = 0$ V $\quad \therefore$ PIV = V_m

- For Full Wave Rectifier Bridge Network

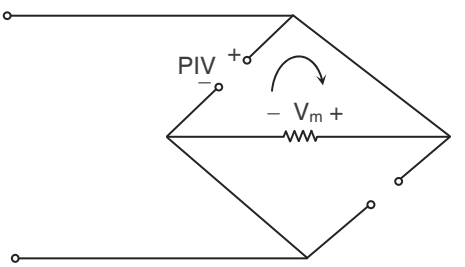

Applying KVL

$PIV_{rating} \geq V_m$

- Center Tapped Transformer

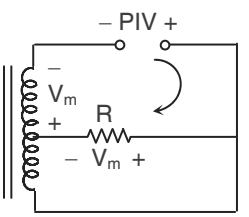

Applying KVL

$PIV_{rating} \geq 2V_m$

ADVANTAGES AND DISADVANTAGES

→ Half Wave Rectifier
- Advantages
  - Low cost
  - Simple
- Disadvantages
  - Low efficiency
  - High ripple factor

→ Full Wave Rectifier
Center Tapped Transformer
- Advantages
  - Low ripple factor
  - High efficiency
- Disadvantage
  - High PIV rating diodes required
  - Bulky
  - Costly
  - Difficult to adjust centre point accurately
  - Output is only half the secondary voltage.

→ Bridge Network
- Advantages
  - Low ripple factor
  - High efficiency
  - Reduced bulkiness and cost
  - PIV rating of diode used is only V_m
- Disadvantages
  - Reduces output voltage by 2 diode drop for every half cycle.

VOLTAGE MULTIPLIER CIRCUIT

Voltage multiplier circuit is employed where stepping up the peak output voltage is required.

- **Voltage Doubler**

  The network is a half wave voltage doubler.

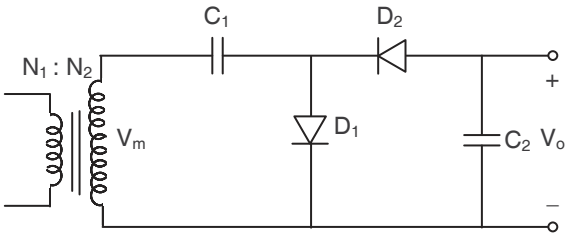

During Positive Half Cycle

Diode D_1 is forward biased, ON state, short circuit.
Diode D_2 is reverse biased, OFF state, open circuit.
The capacitor C_1 charges to peak voltage V_m
The circuit is as shown

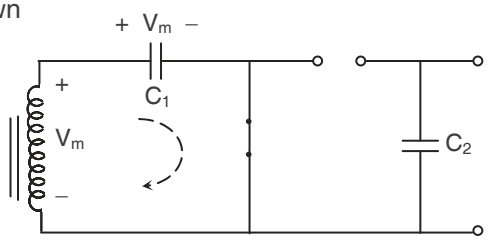

During Negative Half Cycle

Diode D_1 is reversed biased, OFF state, open circuit
Diode D_2 is forward biased, ON state, short circuit
Now diode D_2 conducts charging of capacitor C_2

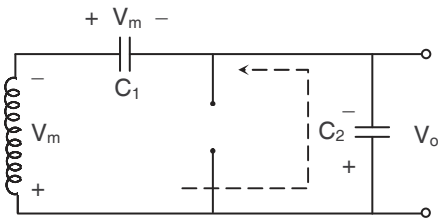

Applying KVL,

$\therefore \quad -V_{C2} + V_{C1} + V_m = 0$

$\therefore \quad V_{C2} = V_m + V_m$

$\therefore \quad V_{C2} = 2V_m$

The peak inverse voltage across each diode is $2V_m$.

On similar lines voltage Tripler and Quadruple circuit can be designed.

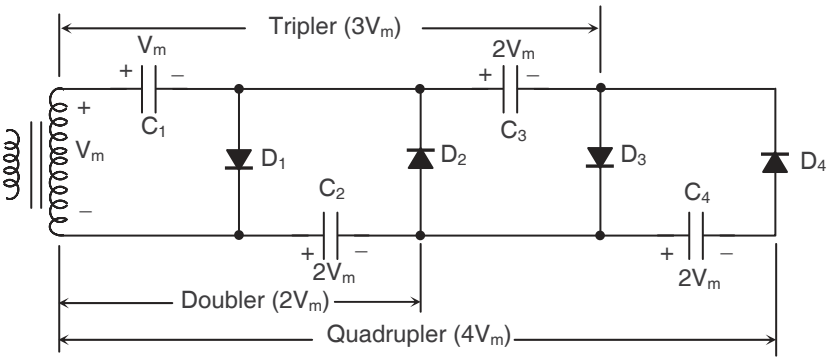

Fig. Voltage Tripler and quadruple.

LIST OF FORMULAE

- Average or DC value

$$I_{dc} = \frac{1}{2\pi}\int_0^{2\pi} I_L \, d(\omega t)$$

- Ripple factor

$$\gamma = \frac{V_{ac}}{V_{dc}}$$

- Form factor

$$FF = \frac{V_{rms}}{V_{dc}}$$

- RMS Value

$$I_{rms} = \sqrt{\frac{1}{2\pi}\int_0^{2\pi} (I_L)^2 \, d(\omega t)}$$

- Efficiency

$$\eta = \frac{P_{dc}}{P_{ac}}$$

- Peak Factor

$$PF = \frac{\text{Peak value}}{\text{rms value}}$$

LMR (LAST MINUTE REVISION)

Parameters	Half wave rectifier	Full wave rectifier
1. Average or DC value	$I_{dc} = \frac{I_m}{\pi}$, $V_{dc} = \frac{V_m}{\pi}$	$I_{dc} = \frac{2I_m}{\pi}$, $V_{dc} = \frac{2V_m}{\pi}$
2. RMS value	$I_{rms} = \frac{I_m}{2}$, $V_{rms} = \frac{V_m}{2}$	$I_{rms} = \frac{I_m}{\sqrt{2}}$, $V_{rms} = \frac{V_m}{\sqrt{2}}$
3. Ripple factor	$\gamma = 1.21$	$\gamma = 0.483$
4. Efficiency	$\eta = \frac{4}{\pi^2}$	$\eta = \frac{8}{\pi^2}$
5. Form Factor	$FF = \frac{\pi}{2}$	$FF = \frac{\pi}{2\sqrt{2}} = 1.11$
6. Peak Factor	$PF = 2$	$PF = \sqrt{2}$
7. PIV rating	$\geq V_m$	$\geq V_m$, bridge network $\geq 2V_m$, center tapped

- In ideal diode, the current flow in only one direction.
- The point of intersection of load line and diode characteristics is called as operating point or quiescent point or Q–point.
- The circuit which has the ability to clip certain portion of input signal without changing or distorting the remaining portion of the signal is called as clipper.
- Double ended clipper is a form of parallel or shunt clipping circuit.
- If cathode of diode is at higher potential, than anode then diode is reverse biased.
- A network which clamps the input signal to different dc levels is called as clamper.
- Rectifier converts sinusoidal voltage to pulsating dc signal.
- The unwanted ac components present in the dc output are called as ripple.
- Efficiency is defined as the ratio of output dc power to input ac power.
- Form factor is the ratio of rms value to average value.
- Peak factor is ratio of peak value to rms value.
- Peak inverse voltage is the maximum voltage to which the diode can be subjected.
- Voltage multiplier circuit is employed where stepping up the peak.

Advantages and Disadvantages

Half Wave Rectifier

- Advantages
  - Low cost
  - Simple
- Disadvantages
  - Low efficiency
  - High ripple factor

Full Wave Rectifier (Center Tapped Transformer**)**

- Advantages
  - Low ripple factor
  - High efficiency
- Disadvantage
  - High PIV rating diodes required
  - Bulky
  - Costly
  - Difficult to adjust centre point accurately
  - Output is only half the secondary voltage.

Bridge Network

- Advantages
  - Low ripple factor
  - High efficiency
  - Reduced bulkiness and cost
  - PIV rating of diode used is only V_m
- Disadvantages
  - Reduces output voltage by 2 diode drop for every half cycle.

❑ ❑ ❑ ❑ ❑ ❑

ASSIGNMENT – 1

Duration : 45 mins **Marks : 30**

Q1 to Q 6 carry one mark each

1. For a 2V diode, if the current at operating point decreases the diode resistance _____

(A) increases (B) decreases
(C) remains same (D) cannot be predicted

2. Which of the following factors contributes for the delay time in BJT ?
(A) Emitter junction transition capacitance
(B) Collector junction diffusion capacitance
(C) Both of above
(D) None of the above

3. Consider the circuit as shown below

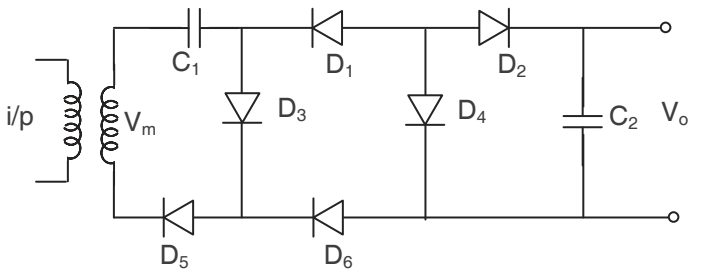

The output across capacitor C_2 will be _____

(A) 0 (B) V_m
(C) $2V_m$ (D) None of these

4. The load line is determined by the _____ while the characteristics are defined by the _____

(A) Network device, network device
(B) Network device, chosen device
(C) Chosen device, chosen device
(D) Chosen device, network device

5. For half wave rectifier with capacitor input filter what will be the maximum voltage that will appear across the diode for an input ac of 10V?

(A) 10V (B) 14V
(C) 1.5V (D) 28V

6. In a transistor amplifier, the reverse saturation current I_{CO},
(A) increases linearly with temperature
(B) doubles every 10°C rise in temperature
(C) reduces every 10°C rise in temperature
(D) does not depend on temperature

Q7 to Q18 carry two marks each

7.

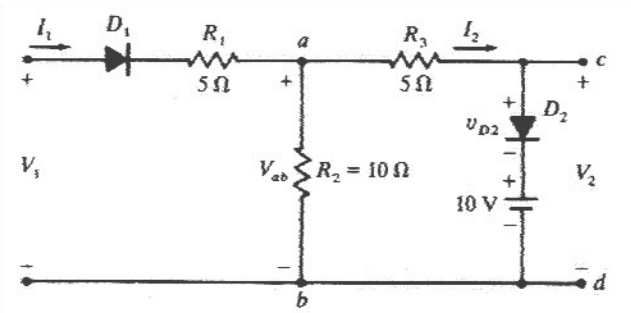

The diodes in the fig. are ideal. The transfer characteristics for $-20V \le V_1 \le 20V$ is,

(A)

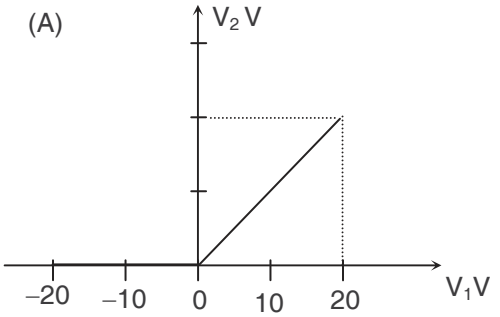

(B)

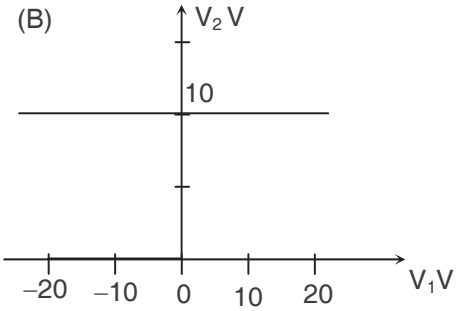

(C)

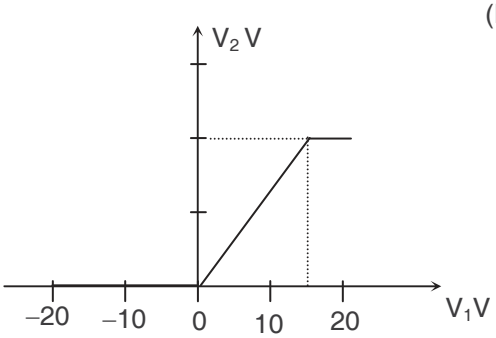

(D) None of the above

8. In the voltage regulator shown in fig. the load current can vary from 100 mA to 500 mA. Assuming that the zener diode is ideal (i.e. the zener knee current is negligibly small and zener resistance is zero in the breakdown region) the value of R is,

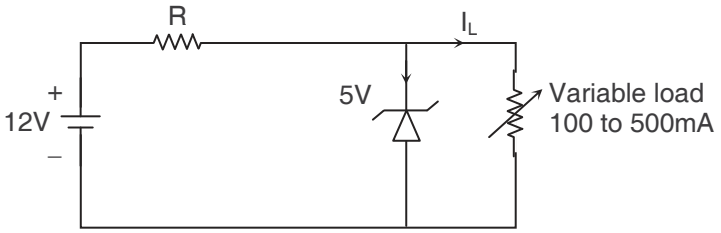

(A) 7Ω
(B) 70Ω
(C) 70/3Ω
(D) 14Ω

9.

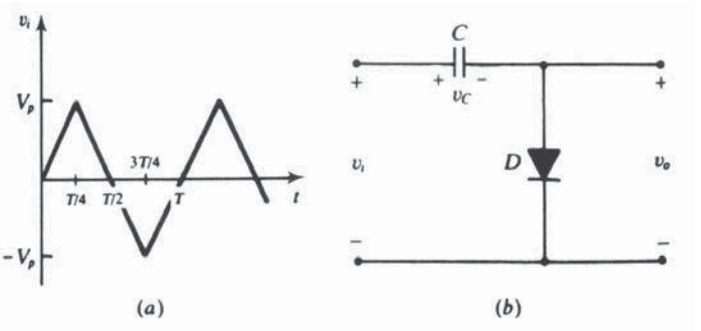

The output V_o of above circuit if $V_c(0) = 0V$

(A)

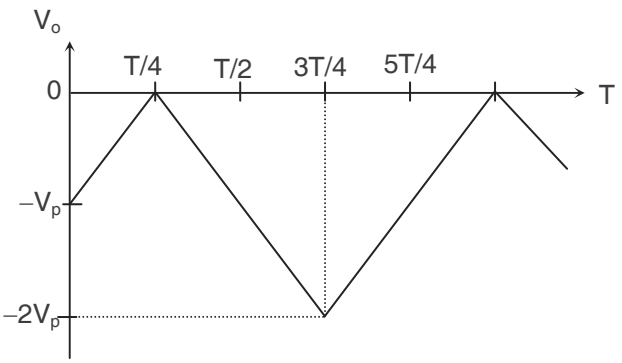

(B)

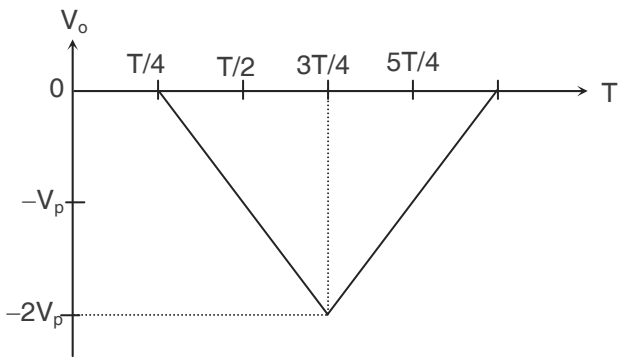

(C)

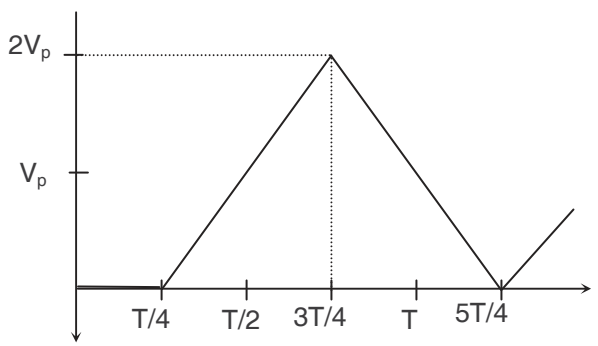

(D) None of the above

10. For a silicon diode, the incremental resistance at room temperature and current 26mA is

(A) 1Ω (B) 2Ω
(C) 10Ω (D) 20Ω

11. The transistor operates in inverted region when

(A) CB and BE junctions are forward biased
(B) CB is forward biased and BE is reverse biased
(C) CB and BE are reverse biased.
(D) none of the above

12. The I – V input characteristics of the circuit when the switch is open

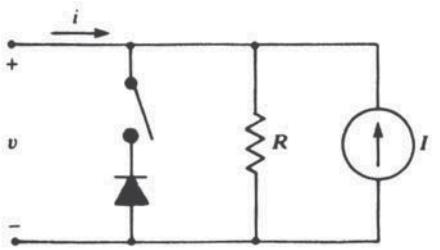

(A)

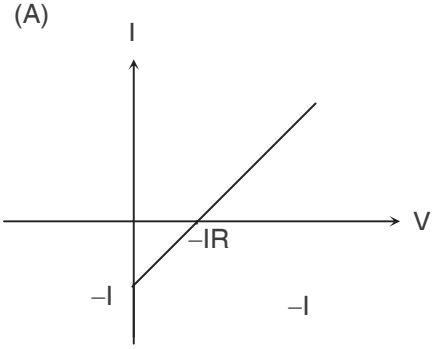

(B)

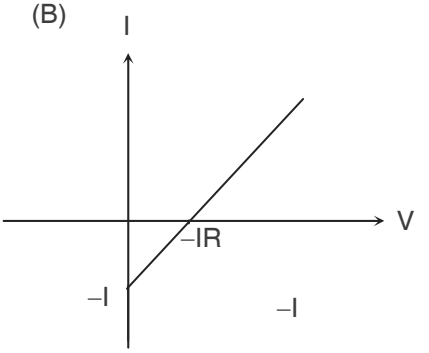

(C)

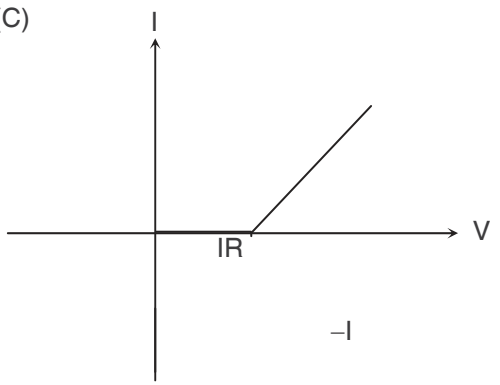

(D) None of the above

13. The circuit shown in fig. with output voltage across AB is that of _____

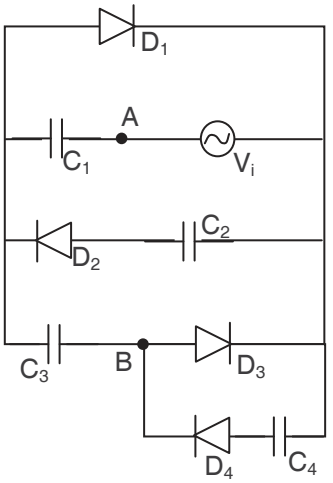

(A) Voltage doubler (B) Voltage tripler

(C) Voltage quadrupler (D) None of these

14. For the parallel diode configuration shown below the diode currents are,

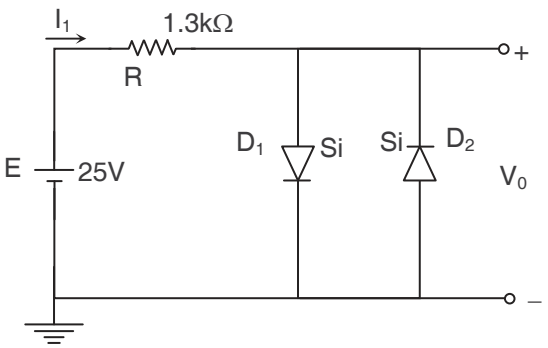

(A) 18.7mA, 0mA (B) 14.09mA, 9.35mA

(C) 18.7mA, 18.7mA (D) 14.09mA, 14.09mA

15. The current–voltage characteristic of a p–n junction diode is given by

$I_D = I_s\left(e^{V_D/V_T} - 1\right)$.

The diode current is 0.5 mA at V_D = 340 mV. Assuming $V_T = 25\text{mV}$, the value of current at V_D = 440 mV is,

(A) 0.65mA (B) 16mA

(C) 6.5μA (D) 27mA

16. The positive logic AND gate is shown in figure below.

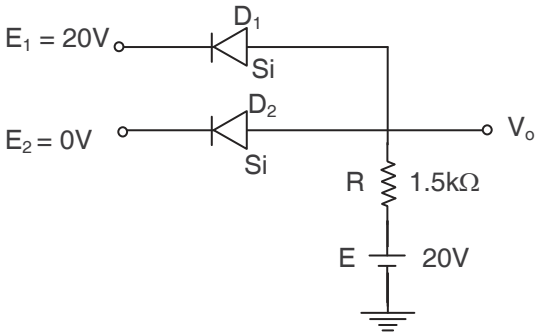

The current level at the output is,

(A) 20mA increase (B) 15mA decrease
(C) 1.29mA decrease (D) 12.9mA increase

17. The applied input ac power to a half wave rectifier is 100 Watts. The dc output power obtained is 40 Watts. What will be the power efficiency for the given half wave rectifier?

(A) 40% (B) 50%
(C) 80% (D) 60%

18. A power supply A delivers 10V dc with a ripple of 0.5mV rms, while supply B delivers 25V dc with a ripple of 1 mV. Which is a better power supply?

(A) Only A (B) Only B
(C) Both A and B (D) None of A and B

❑ ❑ ❑ ❑ ❑ ❑

TEST PAPER – 1

Duration : 30 mins **Marks : 25**

Q1 to Q5 carry one mark each

1. In a full wave rectifier using two ideal diodes, V_{dc} and V_m are the dc and peak values of the voltages respectively across a resistive load. If PIV is the peak inverse voltage, then the appropriate relationship for this rectifier is,

(A) $V_{dc} = \frac{V_m}{\pi}$, $PIV = 2V_m$ (B) $V_{dc} = \frac{2V_m}{\pi}$, $PIV = 2V_m$

(C) $V_{dc} = \frac{2V_m}{\pi}$, $PIV = V_m$ (D) $V_{dc} = \frac{V_m}{\pi}$, $PIV = V_m$

2. Consider the following statements

Statement 1: In case of clamper, the total swing of the output is equal to the total swing of the input.

Statement 2: The clamper adjusts the dc level if and only if it knows the exact waveform.

Choose the correct option using the codes given below:

(A) 1 – True, 2 – False (B) 1 – False, 2 – False

(C) 1 – False, 2 – True (D) 1 – True, 2 – True

3. For small signal a.c. operation, a practical forward biased diode can be modelled as,

(A) a resistance and a capacitance in parallel

(B) an ideal diode and resistance in parallel

(C) a resistance and an ideal diode in series

(D) a resistance

4. Determine the current in the network.

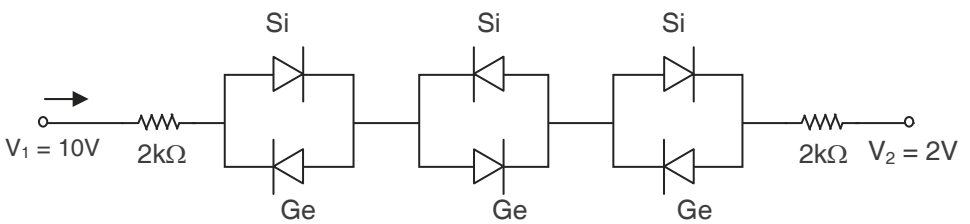

(A) 1.657mA (B) 1.575mA

(C) 1.557mA (D) None of these

5. The drain –source output VI characteristics of an n– channel depletion FET has

(A) $I_{DS} = 0$ at $V_{GS} = 0$

(B) $I_{DS} = -$ve maximum at $V_{GS} = 0$

(C) $I_{DS} = +$ve maximum at $V_{GS} = 0$

(D) I_{DS} independent of V_{GS}

Q6 to Q14(b) carry two marks each

6. A storage battery is charged by a full wave silicon diode rectifier (with centre tapped transformer). The half secondary voltage is 45V (rms). The diode conduction drop is 1V, but forward resistance can be ignored. The counter emf of the battery is 12V, with internal resistance of value.

(A) 2.14 Ω (B) 5 Ω
(C) 10 Ω (D) 1.2 Ω

7. A bridge rectifier uses four identical diodes of forward resistance of 5Ω each. It is supplied from a transformer with output voltage of 20V (rms) and secondary winding resistance of 10Ω. Calculate output dc voltage at dc load current of 100 mA and percent regulation for full load dc current of 200 mA.

(A) 12V, 57.14 (B) 16V, 28.57
(C) 10V, 55 (D) 4V, 34.2

8. The centre tap full wave single phase rectifier circuit uses 2 diodes as shown in the given figure. The rms voltage across each diode is

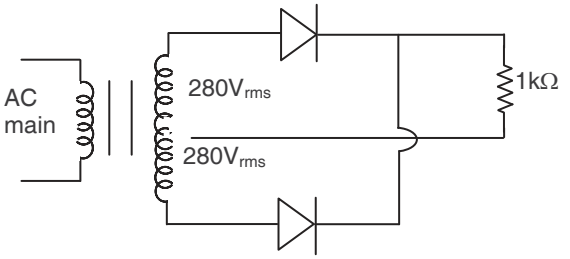

(A) 280V (B) 395.3V
(C) 790.7V (D) 201.3V

9. Match the following :

	Device		**Characteristic/ feature**
1.	BJT	A	Current controlled device
2.	FET	B	Negative conductance device
3.	JFET	C	Conductivity modulation device
4.	UJT	D	Voltage controlled device
		E	Square law device

(A) 1–A, 2–D, 3–E, 4–B

(B) 1–D, 2–A, 3–C, 4–E

(C) 1–C, 2–A, 3–B, 4–E

(D) 1–E. 2–C, 3–D, 4–A

10. Match the following :–

	Basing		**Functions**
1.	EB and CB junctions FB	A	Low gain amplifier
2.	EB and CB junctions RB.	B	High gain amplifier
3.	EB junction FB. CB junction RB	C	Saturation condition
4.	EB junction RB CB junction FB	D	Cut off condition

(A) 1–C, 2–D, 3–B, 4–A

(B) 1–B, 2–D, 3–A, 4–C

(C) 1–D, 2–C, 3–B, 4–A

(D) 1–A, 2–B, 3–C, 4–D

11. Which of the following figures indicates the equivalent circuit for tunnel diode

(A)

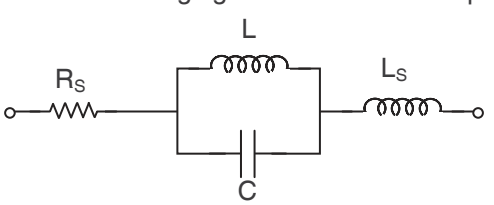

(B)

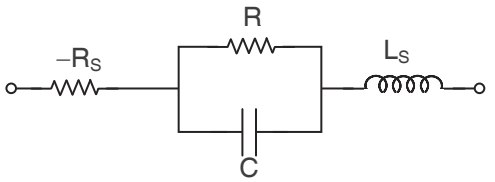

(C)

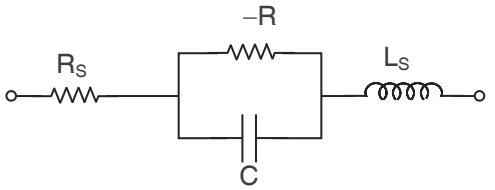

(D)

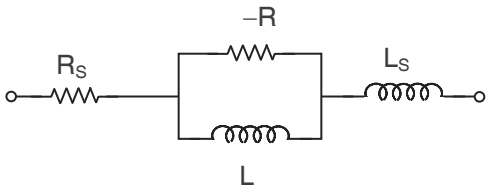

12. For the circuit shown above the value of I_C is

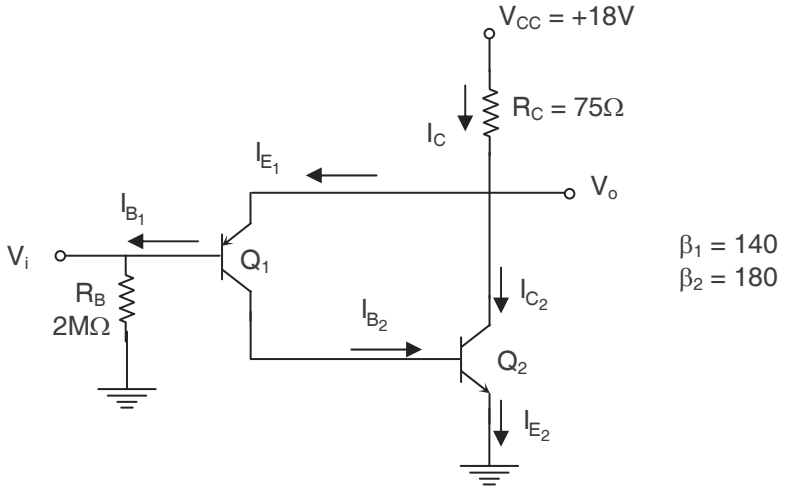

(A) 0.623mA (B) 112.1mA
(C) 101.3mA (D) 0.723mA

13. Which of the following plot can be used to show the input Volt–Ampere characteristics of a common emitter configuration ?
(A) V_{CE} versus I_C for constant value of I_B
(B) V_{BE} versus I_B for constant value of I_C
(C) V_{BE} versus I_B for constant value of V_{CE}
(D) V_{CB} versus I_C for constant value of I_E

Linked Answer Question

14(a). A diode whose internal resistance is 10Ω is to supply power to a 1000Ω load from an 110V (rms) source of supply. Calculate the dc and ac load current

(A) 77 mA, 49.02 mA (B) 49.02 mA, 77 mA
(C) 77A, 49.02 A (D) 49.02A, 77 mA

14(b). For the above find the ripple factor

(A) 12.1 (B) 0.121
(C) 1.01 (D) 1.21

❑ ❑ ❑ ❑ ❑ ❑