GATE

Be sure with Vidyalankar Since 1960

Pearl Centre, S.B. Marg, Dadar (W), Mumbai – 400 028. Tel. 4232 4232

CE : CIVIL ENGINEERING

Topicwise Examination Questions

CONTENTS

Chapter No.	Topic	Page No.
1.	Engineering Mathematics	1
2.	Engineering Mechanics	35
3.	Solid Mechanics and Structural Analysis	37
4.	Concrete Structure	95
5.	Construction Materials and Management	110
6.	Steel Structure	116
7.	Soil Mechanics	134
8.	Fluid Mechanics and Hydraulics	192

Chapter No.	Topic	Page No.
9.	Environmental Engineering	**222**
10.	Irrigation and Hydrology	**251**
11.	Transportation Engineering	**270**
12.	Geomatics Engineering	**297**
•	General Aptitude (GA) Questions	**312**

Ch. 1 : Engineering Mathematics

2000

1. If, A, B, C are square matrices of the same order, $(ABC)^{-1}$ is equal to
   (A) $C^{-1} A^{-1} B^{-1}$ (B) $C^{-1} B^{-1} A^{-1}$
   (C) $A^{-1} B^{-1} C^{-1}$ (D) $A^{-1} C^{-1} B^{-1}$

2. The following integral $\lim_{a\to\infty}\int_1^a x^{-4}\,dx$
   (A) Diverges (B) Converges to $\frac{1}{3}$
   (C) Converges to $-\frac{1}{a^3}$ (D) Converges to 0

3. A function with a period 2π is shown below

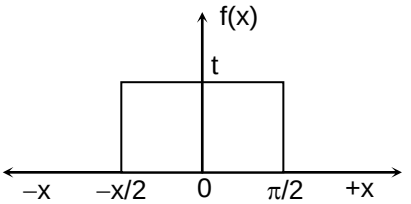

   The Fourier series for this function is given by
   (A) $f(x) = \frac{1}{2}+\sum_{n=1}^{\infty}\frac{2}{n\pi}\sin\frac{n\pi}{2}$ (B) $f(x) = \sum_{n=1}^{\infty}\frac{2}{n\pi}\sin\frac{n\pi}{2}\cos nx$
   (C) $f(x) = \frac{1}{2}+\sum_{n=1}^{\infty}\frac{2}{n\pi}\sin\frac{n\pi}{2}$ (D) $f(x) = \sum_{n=1}^{\infty}\frac{2}{n\pi}\sin\frac{n\pi}{2}\sin nx$

4. Consider the following two statements :
   I. The maximum number of linearly independent column vectors of a matrix A is called the rank of A.
   II. If A is an $n \times n$ square matrix, it will be nonsingular is rank A = n.
   With reference to the above statements, which of the following applies ?
   (A) Both the statements are false (B) Both the statements are true
   (C) I is true but II is false (D) I is false but II is true

5. If $f(x, y, z) = (x^2 + y^2 + z^2)^{-1/2}$
   $\frac{\partial^2 f}{\partial x^2}+\frac{\partial^2 f}{\partial y^2}+\frac{\partial^2 f}{\partial z^2}$ is equal to
   (A) Zero (B) 1
   (C) 2 (D) $-3(x^2+ y^2 + z^2)^{-5/2}$

6. The Taylor expansion of sin x about $x = \pi/6$ is given by
   (A) $\frac{1}{2}+\frac{\sqrt{3}}{2}\left(x-\frac{\pi}{6}\right)-\frac{1}{4}\left(x-\frac{\pi}{6}\right)^2-\frac{\sqrt{3}}{12}\left(x-\frac{\pi}{6}\right)^3+\ldots$
   (B) $x-\frac{x^3}{3!}+\frac{x^5}{5!}-\frac{x^7}{7!}+\ldots$

(C) $\left(x-\frac{\pi}{6}\right)-\frac{\left(x-\frac{\pi}{6}\right)^3}{3!}+\frac{\left(x-\frac{\pi}{6}\right)^5}{5!}-\frac{\left(x-\frac{\pi}{6}\right)^3}{7!}+\ldots$

(D) $\frac{1}{2}$

7. Let F(s) = £ [If (t)] denote the Laplace transform of the function f(t). Which of the following statements is correct ?

(A) $£\left[\frac{df}{dt}\right] = \frac{1}{s}F(s)$; $£\int_0^t f(\tau)\,d\tau = sF(s) - f(0)$

(B) $£\left[\frac{df}{dt}\right] = sF(s) - F(0)$; $£\left[\int_0^t f(\tau)\,d\tau\right] = -\frac{dF}{ds}$

(C) $£\left[\frac{df}{dt}\right] = sF(s) - F(0)$; $£\left[\int_0^t f(\tau)\,d\tau\right] = F(s-a)$

(D) $£\left[\frac{df}{dt}\right] = sF(s) - F(0)$; $£\left[\int_0^t f(\tau)\,d\tau\right] = \frac{1}{s}F(s)$

8. The limit of the function f(x) = $\left[1-a^4/x^4\right]$ as $x \to \infty$ is given by

(A) 1 (B) exp $[-a^4]$

(C) ∞ (D) Zero

9. The maxima and minima of the function f(x) = $2x^3 - 15x^2 + 36x + 10$ occur, respectively, at

(A) x = 3 and x = 2 (B) x = 1 and x = 3

(C) x = 2 and x = 3 (D) x = 3 and x = 4

10. Find the solution of the differential equation $\frac{d^2y}{dt^2}+\lambda^2 y = \cos \omega t + k$ with initial conditions y(0) = 0, $\frac{dy}{dt}(0) = 0$. Hence λ , ω and k are constants. Use either the method of undetermined coefficients or the operator $\left(D=\frac{d}{dt}\right)$ based method.

11. A is a square matrix is given by

$$A = \begin{bmatrix} 2 & & 0 \\ -1 & 2 & \\ 0 & -1 & 2 \end{bmatrix}$$

One of the eigenvalues of A is given to be equal to 2. Determine the other eigenvalues. Express the eigenvector corresponding to the lowest eigenvalue in the form $[1\ a\ b]^T$ and determine a and b.

2001

1. The number of boundary conditions required to solve the differential equation $\frac{\partial^2\phi}{\partial x^2} + \frac{\partial^2\phi}{\partial y^2} = 0$ is

(A) 2 (B) 0
(C) 4 (D) 1

2. Value of the integral $I = \int_0^{\pi/4} \cos^2 x dx$ is

(A) $\frac{\pi}{8} + \frac{1}{4}$ (B) $\frac{\pi}{8} - \frac{1}{4}$
(C) $-\frac{\pi}{8} - \frac{1}{4}$ (D) $-\frac{\pi}{8} + \frac{1}{4}$

3. Limit of the following series as x approaches $\frac{\pi}{2}$ is

$f(x) = x - \frac{x^3}{3!} + \frac{x^5}{5!} - \frac{x^7}{7!}$

(A) $\frac{2\pi}{3}$ (B) $\frac{\pi}{2}$
(C) $\frac{\pi}{3}$ (D) 1

4. Determinant of the following matrix is $\begin{bmatrix} 5 & 3 & 2 \\ 1 & 2 & 6 \\ 3 & 5 & 10 \end{bmatrix}$

(A) –76 (B) –28
(C) +28 (D) +72

5. The inverse Laplace Transform of $\frac{1}{(s^2 + 2s)}$ is

(A) $(1 - e^{-2t})$ (B) $\frac{(1 + e^{+2t})}{2}$
(C) $\frac{(1 - e^{+2t})}{2}$ (D) $\frac{(1 - e^{-2t})}{2}$

6. The solution for the following differential equation with boundary conditions $y(0) = 2$ and $y'(1) = -3$ is $\frac{d^2y}{dx^2} = 3x - 2$

(A) $y = \frac{x^3}{3} - \frac{x^2}{2} + 3x - 6$ (B) $y = 3x^3 - \frac{x^2}{2} - 5x + 2$
(C) $y = \frac{x^3}{2} - x^2 - \frac{5x}{2} + 2$ (D) $y = x^3 - \frac{x^2}{2} + 5x + \frac{3}{2}$

7. The product $[P][Q]^T$ of the following two matrices [P] and [Q] is

$[P] = \begin{bmatrix} 2 & 3 \\ 4 & 5 \end{bmatrix}$; $[Q] \begin{bmatrix} 4 & 8 \\ 9 & 2 \end{bmatrix}$

(A) $\begin{bmatrix} 32 & 24 \\ 56 & 46 \end{bmatrix}$ (B) $\begin{bmatrix} 46 & 56 \\ 24 & 32 \end{bmatrix}$

(C) $\begin{bmatrix} 35 & 22 \\ 61 & 42 \end{bmatrix}$ (D) $\begin{bmatrix} 32 & 56 \\ 24 & 46 \end{bmatrix}$

8. The given values of the matrix $\begin{bmatrix} 5 & 3 \\ 2 & 9 \end{bmatrix}$ are

(A) (5.13, 9.42) (B) (3.85, 2.93)
(C) (9.00, 5.00) (D) (10.16, 3.84)

9. A car having a mass m is travelling at a constant velocity of V_0. At time t = 0, the engine is shut off, assuming that the resistance to the motion of the car is proportional to the square of the instantaneous velocity (v), find v as a function of the distance travelled (x) after the engine is shutt off by setting up the differential equation using the Newton's principle.

10. Determine the volume of the largest rectangular parallelepiped which can be inscribed in a hemisphere of radius a shown below using the maxima principle of calculus.

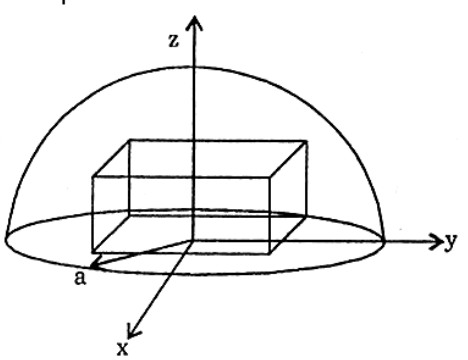

2002

1. Eigen values of the following matrix are : $\begin{bmatrix} -1 & 4 \\ 4 & -1 \end{bmatrix}$

(A) 3 and –5 (B) –3 and 5
(C) –3 and –5 (D) 3 and 5

2. The value of the following definite integral is:

$$\int_{-\frac{\pi}{2}}^{\frac{\pi}{2}} \frac{\sin 2x}{1+\cos x} dx$$

(A) –2 ln 2 (B) 2
(C) 0 (D) $(\ln 2)^2$

3. The following function has a local minima at which value of x:

$$f(x) = x\sqrt{5-x^2}$$

(A) $-\frac{\sqrt{5}}{2}$ (B) $\sqrt{5}$

(C) $\sqrt{\frac{5}{2}}$ (D) $-\sqrt{\frac{5}{2}}$

4. The value of the following improper integral is $\int_0^1 x \ln x$

(A) 1/4 (B) 0

(C) –1/4 (D) 1

5. The directional derivative of the following function at (1, 2) in the direction of (4i + 3j) is:

$f(x, y) = x^2 + y^2$

(A) 4/5 (B) 4

(C) 2/5 (D) 1

6. The Laplace Transform of the following function is

$$f(t) = \begin{cases} \sin t \text{ for } 0 \le t \le \pi \\ 0 \text{ for } t > \pi \end{cases}$$

(A) $\frac{1}{1+s^2}$ for all s > 0 (B) $\frac{1}{1+s^2}$ for all s < π

(C) $\frac{1+e^{-\pi s}}{1+s^2}$ for all s > 0 (D) $\frac{e^{-\pi s}}{1+s^2}$ for all s > 0

7. The limit of the following sequence as $n \to \infty$ is:

(A) 0 (B) ∞

(C) ∞ (D) $-\infty$

8. A solid region in the first octant is bounded by the co-ordinate planes and the plane x + y + z = 2. The density of the solid is ρ(x, y, z) = 2x. Calculate the mass of the solid.

9. The following equation is sometimes used to model the population growth :

$$\frac{dN}{dt} = -\alpha N\left(\ln\frac{N}{K}\right)$$

where, N is the population at time t, a > 0 is growth coefficient and K > 0 is a constant. Given, at t = 0, N = N_0 and $0 < N_0 < K$.

(A) Find an expression for the population with time.

(B) What is the population as $t \to \infty$?

(C) Find a constant $c \in (0, 1)$ such that the population growth rate is maximum at N = cK.

2003

1. Given Matrix [A] = $\begin{bmatrix} 4 & 2 & 1 & 3 \\ 6 & 3 & 4 & 7 \\ 2 & 1 & 0 & 1 \end{bmatrix}$, the rank of the matrix is

(A) 4 (B) 3
(C) 2 (D) 1

2. A box contains 10 screws, 3 of which are defective. Two screws are drawn at random with replacement. The probability that none of the two screws is defective will be

(A) 100 % (B) 50 %
(C) 49 % (D) None of these

3. If P, Q and R are three points having coordinates (3,–2,–1), (1,3,4), (2,1,–2) in XYZ space, then the distance from point P to plane OQR (O being the origin of the coordinate system) is given by

(A) 3 (B) 5
(C) 7 (D) 9

4. If L defines the Laplace Transform of a function, L [sin (at)] will be equal to

(A) $a/(s^2 - a^2)$ (B) $a/(s^2 + a^2)$
(C) $s/(s^2 + a^2)$ (D) $s/(s^2 - a^2)$

5. The Fourier series expansion of a symmetric and even function, $f(x)$ where
$f(x) = 1 + (2 \times /\pi),\ -\pi < x < 0$ and
$= 1 - (2 \times /\pi),\ 0 < x < \pi$
will be

(A) $\sum_{n=1}^{\infty}\left(4/\pi^2 n^2\right)(1+\cos n\pi)$ (B) $\sum_{n=1}^{\infty}\left(4/\pi^2 n^2\right)(1-\cos n\pi)$

(C) $\sum_{n=1}^{\infty}\left(4/\pi^2 n^2\right)(1-\sin n\pi)$ (D) $\sum_{n=1}^{\infty}\left(4/\pi^2 n^2\right)(1+\sin n\pi)$

2004

1. Real matrices $[A]_{3.1}$, $[b]_{3.3}$, $[C]_{3.5,}$ $[D]_{5.3}$, $[E]_{5.5}$, $[F]_{5.1}$ are given. Matrices [B] and [E] symmetric. Following statements are made with respect to these matrices.
(I) Matrix product $\{F\}^T [C]^T [B] [C] \{F\}$ is a scalar
(II) Matrix product $[D]^T [F] [D]$ is always symmetric
With reference to above statements, which of the following applies ?

(A) Statement I is true but II is false (B) Statement I is false but II is true
(C) Both the statements are true (D) Both the statements are false

2. The summation of series $S = 2 + \frac{5}{2} + \frac{8}{2^2} + \frac{11}{2^3} + \ldots\ldots \propto$ is

(A) 4.50 (B) 6.0
(C) 6.75 (D) 10.0

3. The value of the function f(x) = $\lim_{x \to 0} \frac{x^3 + x^2}{2x^3 - 7x^2}$ is

(A) 0 (B) $-\frac{1}{7}$

(C) $\frac{1}{7}$ (D) ∞

4. The eigenvalues of the matrix $\begin{bmatrix} 4 & -2 \\ -2 & 1 \end{bmatrix}$

(A) are 1 and 4 (B) are -1 and 2
(C) are 0 and 5 (D) cannot be determined

5. The function $f(x) = 2x^2 - 3x^2 - 36x + 2$ has its maxima at

(A) $x = -2$ only (B) $x = 0$ only
(C) $x = 3$ only (D) both $x = -2$ and $x = 3$

6. Biotransformation of an organic compound having concentration (x) can be modeled using an ordinary differential equation $\frac{dx}{dt} + kx^2 = 0$, where k is the reaction rate constant. If x = a at t = 0, the solution of the equation is

(A) $x = ae^{-kt}$ (B) $\frac{1}{x} = \frac{1}{a} + kt$

(C) $x = a(1 - e^{-kt})$ (D) $x = a + kt$

7. A hydraulic structure has four gates which operate independently. The probability of failure of each gate is 0.2. Given that gate 1 has failed, the probability that both gates 2 and 3 will fail is

(A) 0.240 (B) 0.200
(C) 0.040 (D) 0.008

2005

1. Consider the matrices $X_{(4' 3)'}$ $Y_{(4-3)}$ and $P_{(2' 3)}$. The order of $[P(X^TY)^{-1} P^T)^T$ will be

(A) (2×2) (B) (3×3)
(C) (4×3) (D) (3×4)

2. Consider a non-homogeneous system of linear equations representing mathematically an over-determined system. Such a system will be

(A) consistent having a unique solution
(B) consistent having many solutions
(C) inconsistent having a unique solution
(D) inconsistent having no solution

3. Which one of the following is NOT true for complex number Z_1 and Z_2?

(A) $\frac{Z_1}{Z_2} = \frac{Z_1 \overline{Z_2}}{|Z_2|^2}$

(B) $|Z_1 + Z_2| \le |Z_1| + |Z_2|$
(C) $|Z_1 - Z_2| \le |Z_1| - |Z_2|$
(D) $|Z_1 + Z_2|^2 + |Z_1 - Z_2|^2 = 2|Z_1|^2 + 2|Z_2|^2$

4. Which one of the following statement is NOT true?
   (A) The measure of skewness is dependent upon the amount of dispersion
   (B) In a symmetric distribution, the values of mean, mode and median are the same
   (C) In a positively skewed distribution : mean > median > mode
   (D) In a negatively skewed distribution : mode > mean > median

5. Consider the system of equations
   $A_{(nxn)}\ x_{(nxt)} = 1_{(n \times 1)}$ where, 1 is a scalar.
   Let (l_{ii}, x_{ii}) be an eigen-pair of an eigen value and its corresponding eigen vector for real matrix A. Let I be a $(n \times n)$ unit matrix. Which one of the following statement is NOT correct?
   (A) For a homogeneous $n \times n$ system of linear equations, $(A-1I)\ x = 0$ having a nontrivial solution, the rank of $(A-1I)$ is less than n.
   (B) For matrix A^m, m being a positive integer, (λ_i^m, x_i^m) will be the eigen-pair for all i.
   (C) If $A^T = A^{-1}$, then $[1_i] = 1$ for all i
   (D) If $A^T = A$, then 1_i is real for all i

6. Transformation to linear form by substituting $v = y^{1-n}$ of the equation
   $\frac{dy}{dt} + p(t)y = q(t)y^n$; n > 0 will be
   (A) $\frac{dv}{dt} + (1-n)pv = (1-n)q$
   (B) $\frac{dv}{dt} + (1-n)pv = (1+n)q$
   (C) $\frac{dv}{dt} + (1+n)pv = (1-n)q$
   (D) $\frac{dv}{dt} + (1+n)\ pv = (1+n)q$

7. A rail engine accelerates from its stationary position for 8 seconds and travels a distance of 280 m. According to the Mean Value Theorem, the speedometer at a certain time during acceleration must read exactly.
   (A) 0 km/h
   (B) 8 km
   (C) 75 km/h
   (D) 126 km/h

8. The solution of $\frac{d^2y}{dx^2} + 2\frac{dy}{dx} + 17y = 0$; y(0) = 1,
   $\frac{dy}{dx}\left(\frac{p}{4}\right) = 0$ in the range $0 < x < \frac{\pi}{4}$ is given by
   (A) $e^{-x}\left(\cos 4x + \frac{1}{4}\sin 4x\right)$
   (B) $e^{x}\left(\cos 4x - \frac{1}{4}\sin 4x\right)$
   (C) $e^{-4x}\left(\cos x - \frac{1}{4}\sin x\right)$
   (D) $e^{-4x}\left(\cos 4x - \frac{1}{4}\sin 4x\right)$

9. Value of the integral $\oint (xydy - y^2dx)$, where, c is the square cut from the first quadrant by the line x = 1 and y = 1 will be (Use Green's theorem to change the line integral into double integral)
   (A) $\frac{1}{2}$
   (B) 1
   (C) $\frac{3}{2}$
   (D) $\frac{5}{3}$

10. Consider likely applicability of Cauchy's Integral Theorem to evaluate the following integral counter clockwise around the unit circle c.

$I = \oint_c \sec z \, dz$

z being a complex variable. The value of I will be

(A) I = 0 : singularities set = ϕ

(B) I = 0: singularities set = $\left\{\pm\frac{2n+1}{2}\pi \;\; n = 0, 1, 2, ...\right\}$

(C) I = $\pi/2$: singularities set = {$\pm$ nπ | n = 0, 1, 2, ...}

(D) None of above

Statement for Linked Answer Questions 11 and 12 :

Given a > 0, we wish to calculate its reciprocal value $\frac{1}{a}$ by using Newton Raphson method for f(x) = 0

11. The Newton Raphson algorithm for the function will be

(A) $x_{K+1} = \frac{1}{2}\left(x_K + \frac{a}{x_K}\right)$ (B) $x_{K+1} = \left(x_K + \frac{a}{2} x \frac{2}{k}\right)$

(C) $X_{K+1} = 2X_K - ax_K^2$ (D) $X_{K+1} = X_K - \frac{a}{2} X_K^2$

12. For a = 7 and starting with x_0= 0.2, the first two iterations will be

(A) 0.11, 0.1299 (B) 0.12, 0.1392

(C) 0.12, 0.1416 (D) 0.13, 0.1428

2006

1. Solution for the system defined by the set of equations 4y + 3z = 8; 2x – z = 2; and 3x +2y = 5 is

(A) x = 0; y = 1; z = 4/3 (B) x = 0; y = 1/2; z = 2

(C) x = 1; y = 1/2 ; z = 2 (D) nonexistent

2. The differential equation $\frac{dy}{dx}$ = 0.25 y^2 is to be solved using the backward (implicit) Euler's method with the boundary condition y = 1 at x = 0 and with a step size of 1. What would be the value of y at x = 1?

(A) 1.33 (B) 1.67

(C) 2.00 (D) 2.33

3. For a given matrix A = $\begin{bmatrix} 2 & -2 & 3 \\ -2 & -1 & 6 \\ 1 & 2 & 0 \end{bmatrix}$, one of the eigenvalues is 3. The other two eigenvalues are

(A) 2, –5 (B) 3, –5

(C) 2, 5 (D) 3, 5

4. The directional derivative of $f(x, y, z) = 2x^2 + 3y^2 + z^2$ at the point P : (2, 1, 3) in the direction of the vector a = i – 2 k is

(A) – 2.785 (B) – 2.145
(C) – 1.789 (D) 1.000

5. A class of first year B. Tech. students is composed of four bathes A, B, C and D, each consisting of 30 students. It is found that the sessional marks of students in Engineering Drawing in batch C have a mean of 6.6 and standard deviation of 2.3. The mean and standard deviation of the marks for the entire class are 5.5 and 4.2, respectively. It is decided by the course instructor to normalize the marks of the students of all batches to have the same mean and standard deviation as that of the entire class. Due to this, the marks of a student in batch C are changed from 8.5 to

(A) 6.0 (B) 7.0
(C) 8.0 (D) 9.0

6. A 2nd degree polynomial, f(x), has values of 1, 4, and 15 at x = 0, 1 and 2, respectively. The integral $\int_0^2 f(x)\,dx$ is to be estimated by applying the trapezoidal rule to this data. What is the error (defined as "true value – approximate value") in the estimate?

(A) $-\frac{4}{3}$ (B) $-\frac{2}{3}$
(C) 0 (D) $\frac{2}{3}$

7. What is the area common to the circles r = a and r = 2a cosθ ?

(A) $0.524\ a^2$ (B) $0.614\ a^2$
(C) $0.147\ a^2$ (D) $1.228\ a^2$

8. Using Cauchy's integral theorem, the value of the integral (integration being taken in counter clockwise direction) $\oint_c \frac{z^3 - 6}{3z - i}\,dz$ is

(A) $\frac{2\pi}{81} - 4\pi i$ (B) $\frac{\pi}{8} - 6\pi i$
(C) $\frac{4\pi}{81} - 6\pi i$ (D) 1

9. There are 25 calculators in a box. Two of them are defective. Suppose 5 calculators are randomly picked for inspection (i.e., each has the same chance of being selected), what is the probability that only one of the defective calculators will be included in the inspection ?

(A) $\frac{1}{2}$ (B) $\frac{1}{3}$
(C) $\frac{1}{4}$ (D) $\frac{1}{5}$

10. A spherical naphthalene ball exposed to the atmosphere loses volume at a rate proportional to its instantaneous surface area due to evaporation. If the initial diameter of the ball is 2 cm and the diameter reduces to 1 cm after 3 months, the ball completely evaporates in

(A) 6 months (B) 9 months
(C) 12 months (D) infinite time

11. The solution of the differential equation,

$x^2 \frac{dy}{dx} + 2xy - x + 1 = 0$ given that at x = 1, y = 0 is

(A) $\frac{1}{2} - \frac{1}{x} + \frac{1}{2x^2}$ (B) $\frac{1}{2} - \frac{1}{x} - \frac{1}{2x^2}$

(C) $\frac{1}{2} + \frac{1}{x} + \frac{1}{2x^2}$ (D) $-\frac{1}{2} + \frac{1}{x} + \frac{1}{2x^2}$

2007

1. The minimum and the maximum eigen values of the matrix $\begin{vmatrix} 1 & 1 & 3 \\ 1 & 5 & 1 \\ 3 & 1 & 1 \end{vmatrix}$ are –2 and 6, respectively. What is the other eigen value?

(A) 5 (B) 3
(C) 1 (D) –1

2. The degree of the differential equation $\frac{d^2x}{dt^2} + 2x^3 = 0$ is

(A) 0 (B) 1
(C) 2 (D) 3

3. The solution for the differential equation $\frac{dy}{dx} = x^2 y$ with the condition that y = 1 at x = 0 is

(A) $y = e^{\frac{1}{2x}}$ (B) $\ln(y) = \frac{x^3}{3} + 4$

(C) $\ln(y) = \frac{x^2}{2}$ (D) $y = e^{\frac{x^3}{3}}$

4. For what values of α and β the following simultaneous equations have an infinite number of solutions?

$x + y + z = 5$; $x + 3y + 3z = 9$; $x + 2y + \alpha z = \beta$

(A) 2, 7 (B) 3, 8
(C) 8, 3 (D) 7, 2

5. A velocity vector is given as $\vec{V} = 5xy\vec{i} + 2y^2\vec{j} + 3yz^2\vec{k}$.

The divergence of this velocity vector at (1, 1, 1) is

(A) 9 (B) 10
(C) 14 (D) 15

6. A body originally at 60°C cools down to 40°C in 15 minutes when kept in air at a temperature of 25° C. What will be the temperature of the body at the end of 30 minutes?
(A) 35.2° C (B) 31.5°C
(C) 28.7°C (D) 15°C

7. The following equation needs to be numerically solved using the Newton–Raphson method.
$x^3 + 4x - 9 = 0$
The iterative equation for this purpose is (k indicates the iteration level)
(A) $x_{k+1} = \frac{2x_k^3 + 9}{3x_k^2 + 4}$ (B) $x_{k+1} = \frac{3x_k^2 + 4}{2x_k^2 + 9}$
(C) $x_{k+1} = xk - 3x_k^2 + 4$ (D) $x_{k+1} = \frac{4x_k^2 + 3}{9x_k^2 + 2}$

8. Evaluate $\int_0^\infty \frac{\sin t}{t} dt$
(A) π (B) $\pi/2$
(C) $\pi/4$ (D) $\pi/3$

9. Potential function ϕ is given as $\phi = x^2 - y^2$. What will be the stream function (ψ) with the condition $\psi = 0$ at $x = y = 0$?
(A) $2xy$ (B) $x^2 + y^2$
(C) $x^2 - y^2$ (D) $2x^2y^2$

10. The inverse of the 2×2 matrix $\begin{bmatrix} 1 & 2 \\ 5 & 7 \end{bmatrix}$ is
(A) $\frac{1}{3}\begin{bmatrix} -7 & 2 \\ 5 & -1 \end{bmatrix}$ (B) $\frac{1}{3}\begin{bmatrix} 7 & 2 \\ 5 & 1 \end{bmatrix}$
(C) $\frac{1}{3}\begin{bmatrix} 7 & -2 \\ -5 & 1 \end{bmatrix}$ (D) $\frac{1}{3}\begin{bmatrix} -7 & -2 \\ -5 & -1 \end{bmatrix}$

11. Given that one root of the equation $x^3 - 10x^2 + 31x - 30 = 0$ is 5, the other two roots are
(A) 2 and 3 (B) 2 and 4
(C) 3 and 4 (D) –2 and –3

12. If the standard deviation of the spot speed of vehicles in a highway is 8.8 kmph and the mean speed of the vehicles is 33 kmph, the coefficient of variation in speed is
(A) 0.1517 (B) 0.1867
(C) 0.2666 (D) 0.3646

2008

1. The product of matrices $(PQ)^{-1} P$ is
(A) P^{-1} (B) Q^{-1}
(C) $P^{-1} Q^{-1} P$ (D) PQP^{-1}

2. The general solution of $\frac{d^2y}{dx^2} + y = 0$ is

(A) $y = P\cos x + Q\sin x$ (B) $y = P\cos x$
(C) $y = P$ six x (D) $y = P\sin^2 x$

3. The equation $k_x \frac{\partial^2 h}{\partial x^2} + k_2 \frac{\partial^2 h}{\partial z^2} = 0$ can be transformed to $\frac{\partial^2 h}{\partial x_1^2} + \frac{\partial^2 h}{\partial z^2} = 0$ by substituting

(A) $x_1 = x\frac{k_z}{k_x}$ (B) $x_1 = x\frac{k_x}{k_z}$
(C) $x_1 = x\sqrt{\frac{k_x}{k_z}}$ (D) $x_1 = x\sqrt{\frac{k_z}{k_x}}$

4. The value of $\int_0^3 \int_0^x (6 - x - y)\, dx\, dy$ is

(A) 13.5 (B) 27.0
(C) 40.5 (D) 54.0

5. Three values of x and y are to be fitted in a straight line in the form y = a + bx by the method of least squares. Given: $\sum x = 6$, $\sum y = 21$, $\sum x^2 = 14$ and $\sum xy = 46$, the values of a and b are respectively

(A) 2 and 3 (B) 1 and 2
(C) 2 and 1 (D) 3 and 2

6. Solution of $\frac{dy}{dx} = -\frac{x}{y}$ at x = 1 and y = $\sqrt{3}$ is

(A) $x - y^2 = -2$ (B) $x + y^2 = 4$
(C) $x^2 - y^2 = -2$ (D) $x^2 + y^2 = 4$

7. If probability density function of a random variable X is

$f(x) = x^2$ for $-1 \le x \le 1$, and
$= 0$ for any other value of x

then, the percentage probability $P\left(-\frac{1}{3} \le x \le \frac{1}{3}\right)$ is

(A) 0.247 (B) 2.47
(C) 24.7 (D) 247

8. The Eigen values of the matrix [P] = $\begin{bmatrix} 4 & 5 \\ 2 & -5 \end{bmatrix}$ are

(A) –7 and 8 (B) –6 and 5
(C) 3 and 4 (D) 1 and 2

9. A person on a trip has a choice between private car and public transport. The probability of using a private car is 0.45. While using the public transport, further choices available are bus and metro, out of which the probability of commuting by a bus is 0.55. In such a situation, the probability (rounded up to two decimals) of using a car, bus and metro, respectively would be

(A) 0.45, 0.30 and 0.25 (B) 0.45, 0.25 and 0.30
(C) 0.45, 0.55 and 0.00 (D) 0.45, 0.35 and 0.20

10. The following simultaneous equations
$x + y + z = 3$
$x + 2y + 3z = 4$
$x + 4y + kz = 6$
will NOT have a unique solution for k equal to
(A) 0 (B) 5
(C) 6 (D) 7

11. The inner (dot) product of two vectors $\vec{P}$ and $\vec{Q}$ is zero. The angle (degrees) between the two vectors is
(A) 0 (B) 30
(C) 90 (D) 120

2009

1. A square matrix B is skew–symmetric if
(A) $B^T = -B$ (B) $B^T = B$
(C) $B^{-1} = B$ (D) $B^{-1} = B^T$

2. For a scalar function $f(x, y, z) = x^2 + 3y^2 + 2z^2$, the gradient at the point P(1, 2,–1) is
(A) $2\vec{i} + 6\vec{j} + 4\vec{k}$ (B) $2\vec{i} + 12\vec{j} - 4\vec{k}$
(C) $2\vec{i} + 12\vec{j} + 4\vec{k}$ (D) $\sqrt{56}$

3. The analytic function $f(z) = \dfrac{z-1}{z^2+1}$ has singularities at
(A) 1 and –1 (B) 1 and i
(C) 1 and –i (D) i and –i

4. For a scalar function $f(x, y, z) = x^2 + 3y^2 + 2z^2$, the directional derivative at the point P(1, 2, -1) in the direction of a vector $\vec{i} - \vec{j} + 2\vec{k}$ is
(A) –18 (B) $-3\sqrt{6}$
(C) $3\sqrt{6}$ (D) 18

5. The value of the integral $\int_C \dfrac{\cos(2\pi z)}{(2z-1)(z-3)}\,dz$ (where c is a closed curve given by |z| = 1) is
(A) $-\pi i$ (B) $\dfrac{\pi i}{5}$
(C) $\dfrac{2\pi i}{5}$ (D) πi

6. Solution of the differential equation $3y\dfrac{dy}{dx} + 2x = 0$ represents a family of
(A) ellipses (B) circles
(C) parabolas (D) hyperbolas

7. Laplace transform for the function f (x) = cosh(ax) is

(A) $\frac{a}{s^2 - a^2}$ (B) $\frac{s}{s^2 - a^2}$

(C) $\frac{a}{s^2 + a^2}$ (D) $\frac{s}{s^2 + a^2}$

8. In the solution of the following set of linear equations by Gauss elimination using partial pivoting 5x + y + 2z = 34; 4y – 3z = 12; and 10x – 2y + z = –4; the pivots for elimination of x and y are

(A) 10 and 4 (B) 10 and 2

(C) 5 and 4 (D) 5 and –4

9. The standard normal probability function can be approximated as

$$F(x_N) = \frac{1}{1+\exp\left(-1.7255x_N\,|x_N|^{0.12}\right)}$$

Where x_N = standard normal deviate. If mean and standard deviation of annual precipitation are 102 cm and 27 cm respectively, the probability that the annual precipitation will be between 90 cm and 102 cm is

(A) 66.7% (B) 50.0%

(C) 33.3% (D) 16.7%

2010

1. The $\lim_{x\to\infty} \frac{\sin\left[\frac{2}{3}x\right]}{x}$ is

(A) $\frac{2}{3}$ (B) 1

(C) $\frac{3}{2}$ (D) ∞

2. Two coins are simultaneously tossed. The probability of two heads simultaneously appearing is

(A) $\frac{1}{8}$ (B) $\frac{1}{6}$

(C) $\frac{1}{4}$ (D) $\frac{1}{2}$

3. The order and degree of the differential equation $\frac{d^3y}{dx^3} + 4\sqrt{\left(\frac{dy}{dx}\right)^3 + y^2} = 0$ are respectively

(A) 3 and 2 (B) 2 and 3

(C) 3 and 3 (D) 3 and 1

4. The solution to the ordinary differential equation

$\frac{d^2y}{dx^2} + \frac{dy}{dx} - 6y = 0$ is

(A) $y = c_1 e^{3x} + c_2 e^{-2x}$ (B) $y = c_1 e^{3x} + c_2 e^{2x}$

(C) $y = c_1 e^{-3x} + c_2 e^{2x}$ (D) $y = c_1 e^{-3x} + c_2 e^{-2x}$

5. The inverse of the matrix $\begin{bmatrix} 3+2i & i \\ -i & 3-2i \end{bmatrix}$ is

(A) $\frac{1}{12}\begin{bmatrix} 3+2i & i \\ i & 3-2i \end{bmatrix}$ (B) $\frac{1}{12}\begin{bmatrix} 3-2i & -i \\ i & 3+2i \end{bmatrix}$

(C) $\frac{1}{14}\begin{bmatrix} 3+2i & -i \\ i & 3-2i \end{bmatrix}$ (D) $\frac{1}{14}\begin{bmatrix} 3-2i & -i \\ i & 3+2i \end{bmatrix}$

6. The table below gives values of a function F(x) obtained for values of x at intervals of 0.25.

x	0	0.25	0.5	0.75	1.0
F(x)	1	0.9412	0.8	0.64	0.50

The value of the integral of the function between the limits 0 to 1 using Simpson's rule is

(A) 0.7854 (B) 2.3562
(C) 3.1416 (D) 7.5000

7. The partial differential equation that can be formed from z = ax + by + ab has the form (with $p = \frac{\partial z}{\partial x}$ and $q = \frac{\partial z}{dy}$)

(A) z = px + qy (B) z = px + pq
(C) z = px + qy + pq (D) z = qx + pq

8. A parabolic cable is held between two supports at the same level. The horizontal span between the supports is L. The sag at the mid-span is h. The equation of the parabola is $y = 4h\frac{x^2}{L^2}$, where x is the horizontal coordinate and y is the vertical coordinate with the origin at the centre of the cable.

The expression for the total length of the cable is

(A) $\int_0^L \sqrt{1+64\frac{h^2x^2}{L^4}}\,dx$ (B) $\int_0^{L/2} \sqrt{1+64\frac{h^3x^2}{L^4}}\,dx$

(C) $\int_0^{L/2} \sqrt{1+64\frac{h^2x^2}{L^4}}\,dx$ (D) $2\int_0^{L/2} \sqrt{1+64\frac{h^2x^2}{L^4}}\,dx$

9. Given a function
$f(x, y) = 4x^2 + 6y^2 - 8x - 4y + 8$
The optimal value of f(x, y)

(A) is a minimum equal to 10/3 (B) is a maximum equal to 10/3
(C) is a minimum equal to 8/3 (D) is a maximum equal to 8/3

2011

1. [A] is a square matrix which is neither symmetric nor skew-symmetric and $[A]^T$ is its transpose. The sum and difference of these matrices are defined as $[S] = [A] + [A]^T$ and $[D] = [A] - [A]^T$, respectively. Which of the following statements is **TRUE?**

(A) Both [S] and [D] are symmetric
(B) Both [S] and [D] are skew-symmetric
(C) [S] is skew-symmetric and [D] is symmetric
(D) [S] is symmetric and [D] is skew-symmetric

2. The square root of a number N is to be obtained by applying the Newton Raphson iterations to the equation $x^2 - N = 0$. If i denotes the iteration index, the correct iterative scheme will be

(A) $x_{i+1} = \frac{1}{2}\left(x_i + \frac{N}{x_i}\right)$ (B) $x_{i+1} = \frac{1}{2}\left(x_i^2 + \frac{N}{x_i^2}\right)$

(C) $x_{i+1} = \frac{1}{2}\left(x_i + \frac{N^2}{x_i}\right)$ (D) $x_{i+1} = \frac{1}{2}\left(x_i - \frac{N}{x_i}\right)$

3. There are two containers, with one containing 4 Red and 3 Green balls and the other containing 3 Blue and 4 Green balls. One ball is drawn at random from each container. The probability that one of the balls is Red and the other is Blue will be

(A) 1/7 (B) 9/49
(C) 12/49 (D) 3/7

4. For an analytic function, $f(x + iy) = u(x, y) + i\nu(x, y)$, u is given by $u = 3x^2 - 3y^2$. The expression for ν, considering K to be a constant is

(A) $3y^2 - 3x^2 + K$ (B) $6x - 6y + K$
(C) $6y - 6x + K$ (D) $6xy + K$

5. What should be the value of λ such that the function defined below is continuous at $x = \pi/2$?

$$f(x) = \begin{cases} \dfrac{\lambda \cos x}{\dfrac{\pi}{2} - x} & \text{if } x \neq \pi/2 \\ 1 & \text{if } x = \pi/2 \end{cases}$$

(A) 0 (B) $2/\pi$
(C) 1 (D) $\pi/2$

6. What is the value of the definite integral, $\int_0^a \frac{\sqrt{x}}{\sqrt{x} + \sqrt{a-x}}\, dx$?

(A) 0 (B) a/2
(C) a (D) 2a

7. If $\vec{a}$ and $\vec{b}$ are two arbitrary vectors, with magnitudes a and b, respectively, $\left|\vec{a} \times \vec{b}\right|^2$ will be equal to

(A) $a^2b^2 - (\vec{a} \cdot \vec{b})^2$ (B) $ab - \vec{a} \cdot \vec{b}$

(C) $a^2b^2 + (\vec{a} \cdot \vec{b})^2$ (D) $ab + \vec{a} \cdot \vec{b}$

8. The solution of the differential equation $\frac{dy}{dx} + \frac{y}{x} = x$, with the condition that y = 1 at x = 1, is

(A) $y = \frac{2}{3x^2} + \frac{x}{3}$ (B) $y = \frac{x}{2} + \frac{1}{2x}$

(C) $y = \frac{2}{3} + \frac{x}{3}$ (D) $y = \frac{2}{3x} + \frac{x^2}{3}$

2012

1. The estimate of $\int_{0.5}^{1.5} \frac{dx}{x}$ obtained using Simpson's rule with three–point function evaluation exceeds the exact value by:
   (A) 0.235 (B) 0.068
   (C) 0.024 (D) 0.012

2. The annual precipitation data of a city is normally distributed with mean and standard deviation as 1000 mm and 200 mm. respectively. The probability that the annual precipitation will be more than 1200 mm is:
   (A) < 50% (B) 50%
   (C) 75% (D) 100%

3. The infinite series $1+x+\frac{x^2}{2!}+\frac{x^3}{3!}+\frac{x^4}{4!}+.....$ corresponds to:
   (A) sec x (B) e^x
   (C) cos x (D) $1 + \sin^2 x$

4. The error in $\frac{d}{dx} f(x)\Big|_{x=x_0}$ for a continuous function estimated with h = 0.03 using the central difference formula $\frac{d}{dx} f(x)\Big|_{x=x_0} \approx \frac{f(x_0+h)-f(x_0-h)}{2h}$, is 2×10^{-3}. The values of x_0 and $f(x_0)$ are 19.78 and 500.01, respectively. The corresponding error in the central difference estimate for h = 0.02 is approximately
   (A) 1.3×10^{-4} (B) 3.0×10^{-4}
   (C) 4.5×10^{-4} (D) 9.0×10^{-4}

5. In an experiment, positive and negative values are equally likely to occur. The probability of obtaining at most one negative value in five trials is
   (A) $\frac{1}{32}$ (B) $\frac{2}{32}$
   (C) $\frac{3}{32}$ (D) $\frac{6}{32}$

6. The eigenvalues of matrix $\begin{bmatrix} 9 & 5 \\ 5 & 8 \end{bmatrix}$ are
   (A) –2.42 and 6.86 (B) 3.48 and 13.53
   (C) 4.70 and 6.86 (D) 6.86 and 9.50

7. For the parallelogram OPQR shown in the sketch, $\overrightarrow{OP} = a\,\hat{i} + b\,\hat{j}$ and $\overrightarrow{OR} = c\,\hat{i} + d\,\hat{j}$. The area of the parallelogram is
   (A) a d – b c
   (B) a c + b d
   (C) a d + b c
   (D) a b – c d

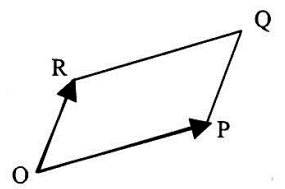

8. The solution of the ordinary differential equation $\frac{dy}{dx} + 2y = 0$ for the boundary condition, y = 5 at x = 1 is

(A) $y = e^{-2x}$ (B) $y = 2e^{-2x}$

(C) $y = 10.95\ e^{-2x}$ (D) $y = 36.95\ e^{-2x}$

2013

1. There is no value of x that can simultaneously satisfy both the given equations. Therefore, find the 'least squares error' solution to the two equations, i.e., find the value of that minimizes the sum of squares of the errors in the two equations. _____.

$$2x = 3$$
$$4x = 1$$

2. What is the minimum number of multiplications involved in computing the matrix product PQR?
Matrix P has 4 rows and 2 columns, matrix Q has 2 rows and 4 columns, and matrix has 4 rows and 1 column. _____

3. Find the magnitude of the error (correct to two decimal places) in the estimation of following integral using Simpson's $\frac{1}{3}$ Rule. Take the step length as 1. _____

$$\int_0^4 (x^4 + 10)\, dx$$

4. The solution for $\int_0^{\pi/6} \cos^4 3\theta \sin^3 6\theta\, d\theta$ is:

(A) 0 (B) $\frac{1}{5}$

(C) 1 (D) $\frac{8}{3}$

5. Find the value of λ such that the function f (x) is a valid probability density function. _____

$f(x) = \lambda(x - 1)(2 - x)$ for $1 \le x \le 2$
$= 0$ otherwise

2014

1. $\lim_{x \to \infty} \left(\frac{x + \sin x}{x} \right)$ equals to

(A) $-\infty$ (B) 0

(C) 1 (D) ∞

2. Given the matrices $J = \begin{bmatrix} 3 & 2 & 1 \\ 2 & 4 & 2 \\ 1 & 2 & 6 \end{bmatrix}$ and $K = \begin{bmatrix} 1 \\ 2 \\ -1 \end{bmatrix}$, the product $K^T JK$ is _____.

3. The probability density function of evaporation E on any day during a year in a watershed is given by f(E) = $\begin{cases} \frac{1}{5} & 0 \le E \le 5 \text{ mm / day} \\ 0 & \text{otherwise} \end{cases}$

The probability that E lies in between 2 and 4 mm/day in a day in the watershed is (in decimal) _____

4. The sum of Eigen values of the matrix, [M] is

Where [M] = $\begin{bmatrix} 215 & 650 & 795 \\ 655 & 150 & 835 \\ 485 & 355 & 550 \end{bmatrix}$

(A) 915 (B) 1355
(C) 1640 (D) 2180

5. With reference to the conventional Cartesian (x, y) coordinate system, the vertices of a triangle have the following coordinates: $(x_1, y_1) = (1, 0)$; $(x_2, y_2) = (2, 2)$; and $(x_3, y_3) = (4, 3)$. The area of the triangle is equal to

(A) $\frac{3}{2}$ (B) $\frac{3}{4}$
(C) $\frac{4}{5}$ (D) $\frac{5}{2}$

6. A traffic office imposes on an average 5 number of penalties daily on traffic violators. Assume that the number of penalties on different days is independent and follows a Poisson distribution. The probability that there will be less than 4 penalties in a day is _____.

7. A fair (unbiased) coin was tossed four times in succession and resulted in the following outcomes: (i) Head, (ii) Head, (iii) Head, (iv) Head. The probability of obtaining a 'Tail' when the coin is tossed again is

(A) 0 (B) $\frac{1}{2}$
(C) $\frac{4}{5}$ (D) $\frac{1}{5}$

8. The determinant of matrix $\begin{bmatrix} 0 & 1 & 2 & 3 \\ 1 & 0 & 3 & 0 \\ 2 & 3 & 0 & 1 \\ 3 & 0 & 1 & 2 \end{bmatrix}$ is _____

9. $z = \frac{2-3i}{-5+i}$ can be expressed as

(A) – 0.5 – 0.5i (B) – 0.5 + 0.5i
(C) 0.5 – 0.5i (D) 0.5 + 0.5i

10. The integrating factor for the differential equation $\frac{dP}{dt} + k_2 P = k_1 L_0 e^{-k_1 t}$ is

(A) $e^{-k_1 t}$ (B) $e^{-k_2 t}$
(C) $e^{k_1 t}$ (D) $e^{k_2 t}$

11. If {x} is a continuous, real valued random variable defined over the interval $(-\infty, +\infty)$ and its occurrence is defined by the density function given as: $f(x) = \frac{1}{\sqrt{2\pi} * b} e^{-\frac{1}{2}\left(\frac{x-a}{b}\right)^2}$ where 'a' and 'b' are the statistical attributes of the random variable {x}. The value of the integral $\int_{-\infty}^{a} \frac{1}{\sqrt{2\pi} * b} e^{-\frac{1}{2}\left(\frac{x-a}{b}\right)^2} dx$ is

(A) 1 (B) 0.5

(C) π (D) $\frac{\pi}{2}$

12. The expression $\lim_{\alpha \to 0} \frac{x^{\alpha} - 1}{\alpha}$ is equal to

(A) log x (B) 0

(C) x log x (D) ∞

13. An observer counts 240 veh/h at a specific highway location. Assume that the vehicle arrival at the location is Poisson distributed, the probability of having one vehicle arriving over a 30–second time interval is _____.

14. The rank of the matrix $\begin{bmatrix} 6 & 0 & 4 & 4 \\ -2 & 14 & 8 & 18 \\ 14 & -14 & 0 & -10 \end{bmatrix}$ is _____.

2015

1. For what value of p the following set of equations will have no solution?

$$2x + 3y = 5$$
$$3x + py = 10$$

2. The integral $\int_{x_1}^{x_2} x^2 dx$ with $x_2 > x_1 > 0$ is evaluated analytically as well as numerically using a single application of the trapezoidal rule. If *I* is the exact value of the integral obtained analytically and *J* is the approximate value obtained using the trapezoidal rule, which of the following statements is correct about their relationship?

(A) $J > I$

(B) $J < I$

(C) $J = I$

(D) Insufficient data to determine the relationship

3. Consider the following probability mass function (p.m.f.) of a random variable X:

$$p(x, q) = \begin{cases} q & \text{if } X = 0 \\ 1-q & \text{if } X = 1 \\ 0 & \text{otherwise} \end{cases}$$

If q = 0.4, the variance of X is _____.

4. The smallest and largest Eigen values of the following matrix are:

$$\begin{bmatrix} 3 & -2 & 2 \\ 4 & -4 & 6 \\ 2 & -3 & 5 \end{bmatrix}$$

(A) 1.5 and 2.5 (B) 0.5 and 2.5
(C) 1.0 and 3.0 (D) 1.0 and 2.0

5. The quadratic equation $x^2 - 4x + 4 = 0$ is to be solved numerically, starting with the initial guess $x_0 = 3$. The Newton-Raphson method is applied once to get a new estimate and then the Secant method is applied once using the initial guess and this new estimate. The estimated value of the root after the application of the Secant method is _____.

6. Consider the following differential equation:

$$x(ydx + xdy)\cos\frac{y}{x} = y(xdy - ydx)\sin\frac{y}{x}$$

Which of the following is the solution of the above equation (c is an arbitrary constant)?

(A) $\frac{x}{y}\cos\frac{y}{x} = c$ (B) $\frac{x}{y}\sin\frac{y}{x} = c$

(C) $xy\cos\frac{y}{x} = c$ (D) $xy\sin\frac{y}{x} = c$

7. Consider the following complex function:

$$f(z) = \frac{9}{(z-1)(z+2)^2}$$

Which of the following is one of the residues of the above function?

(A) –1 (B) 9/16
(C) 2 (D) 9

8. The directional derivative of the field $u(x, y, z) = x^2 - 3yz$ in the direction of the vector $(\hat{i} + \hat{j} - 2\hat{k})$ at point (2, –1, 4) is _____.

9. While minimizing the function f(x), necessary and sufficient conditions for a point, x_0 to be a minima are:

(A) $f'(x_0) > 0$ and $f''(x_0) = 0$ (B) $f'(x_0) < 0$ and $f''(x_0) = 0$
(C) $f'(x_0) = 0$ and $f''(x_0) < 0$ (D) $f'(x_0) = 0$ and $f''(x_0) > 0$

10. In Newton-Raphson iterative method, the initial guess value (x_{ini}) is considered as zero while finding the roots of the equation: $f(x) = -2 + 6x - 4x^2 + 0.5x^3$. The correction, Δx, to be added to x_{ini} in the first iteration is _____.

11. Given, $i = \sqrt{-1}$, the value of the definite integral, $I = \int_0^{\pi/2} \frac{\cos x + i\sin x}{\cos x - i\sin x}dx$ is:

(A) 1 (B) –1
(C) i (D) –i

12. $\lim_{x\to\infty}\left(1+\frac{1}{x}\right)^{2x}$ is equal to

(A) e^{-2} (B) e
(C) 1 (D) e^2

13. Let **A** = $[a_{ij}]$, $1 \le i, j \le n$ with $n \ge 3$ and a_{ij} = i.j. The rank of **A** is:

(A) 0 (B) 1
(C) $n - 1$ (D) n

14. The probability density function of a random variable, x is

$$f(x) = \frac{x}{4}(4-x^2) \quad \text{for } 0 \le x \le 2$$
$$= 0 \quad \text{otherwise}$$

The mean, μ_x of the random variable is _____.

15. Consider the following second order linear differential equation

$$\frac{d^2y}{dx^2} = -12x^2 + 24x - 20$$

The boundary conditions are: at x = 0, y = 5 and at x = 2, y = 21
The value of y at x = 1 is _____.

16. The two Eigen values of the matrix $\begin{bmatrix} 2 & 1 \\ 1 & p \end{bmatrix}$ have a ratio of 3:1 for p = 2. What is another value of p for which the Eigen values have the same ratio of 3:1?

(A) -2 (B) 1
(C) 7/3 (D) 14/3

17. For step-size, $\Delta x = 0.4$, the value of following integral using Simpson's 1/3 rule is _____.

$$\int_0^{0.8} (0.2 + 25x - 200x^2 + 675x^3 - 900x^4 + 400x^5)\,dx$$

2016

1. Newton-Raphson method is to be used to find root of equation $3x - e^x + \sin x = 0$. If the initial trial value for the root is taken as 0.333, the next approximation for the root would be _____.
(note: answer up to three decimal)

2. The type of partial differential equation $\frac{\partial^2 P}{\partial x^2} + \frac{\partial^2 P}{\partial y^2} + 3\frac{\partial^2 P}{\partial x \partial y} + 2\frac{\partial P}{\partial x} - \frac{\partial P}{\partial y} = 0$ is

(A) elliptic (B) parabolic
(C) hyperbolic (D) none of these

3. If the entries in each column of a square matrix M add up to 1, then an eigenvalue of M is
   (A) 4 (B) 3
   (C) 2 (D) 1

4. Types II error in hypothesis testing is
   (A) acceptance of the null hypothesis when it is false and should be rejected
   (B) rejection of the null hypothesis when it is true and should be accepted
   (C) rejected of the null hypothesis when it is false and should be rejected
   (D) acceptance of the null hypothesis when it is true and should be accepted

5. The solution of the partial differential equation $\frac{\partial u}{\partial t} = \alpha \frac{\partial^2 u}{\partial x^2}$ is of the form
   (A) $C\cos(kt)\left[C_1 e^{\left(\sqrt{k/\alpha}\right)x} + C_2 e^{-\left(\sqrt{k/\alpha}\right)x}\right]$
   (B) $Ce^{kt}\left[C_1 e^{\left(\sqrt{k/\alpha}\right)x} + C_2 e^{-\left(\sqrt{k/\alpha}\right)x}\right]$
   (C) $Ce^{kt}\left[C_1 \cos\left(\sqrt{k/\alpha}\right)x + C_2 \sin\left(-\sqrt{k/\alpha}\right)x\right]$
   (D) $C\sin(kt)\left[C_1 \cos\left(\sqrt{k/\alpha}\right)x + C_2 \sin\left(-\sqrt{k/\alpha}\right)x\right]$

6. Probability density function of a random variable X is given below
   $$f(x) = \begin{cases} 0.25 & \text{if } 1 \le x \le 5 \\ 0 & \text{otherwise} \end{cases}$$
   $P(X \le 4)$ is
   (A) $\frac{3}{4}$ (B) $\frac{1}{2}$
   (C) $\frac{1}{4}$ (D) $\frac{1}{8}$

7. The value of $\int_0^\infty \frac{1}{1+x^2}dx + \int_0^\infty \frac{\sin x}{x}dx$ is
   (A) $\frac{\pi}{2}$ (B) π
   (C) $\frac{3\pi}{2}$ (D) 1

8. The area of the region bounded by the parabola $y = x^2 + 1$ and the straight line $x + y = 3$ is
   (A) $\frac{59}{6}$ (B) $\frac{9}{2}$
   (C) $\frac{10}{3}$ (D) $\frac{7}{6}$

9. The respective expressions for complimentary function and particular integral part of the solution of the differential equation $\frac{d^4y}{dx^4} + 3\frac{d^2y}{dx^2} = 108x^2$ are

(A) $\lfloor c_1 + c_2x + c_3 \sin\sqrt{3}x + c_4 \cos\sqrt{3}x \rfloor$ and $\lfloor 3x^4 - 12x^2 + c \rfloor$

(B) $\lfloor c_2x + c_3 \sin\sqrt{3}x + c_4 \cos\sqrt{3}x \rfloor$ and $\lfloor 5x^2 - 12x^2 + c \rfloor$

(C) $\lfloor c_1 + c_3 \sin\sqrt{3}x + c_4 \cos\sqrt{3}x \rfloor$ and $\lfloor 3x^4 - 12x^2 + c \rfloor$

(D) $\lfloor c_1 + c_2x + c_3 \sin\sqrt{3}x + c_4 \cos\sqrt{3}x \rfloor$ and $\lfloor 5x^4 - 12x^2 + c \rfloor$

10. The spot speeds (expressed in km/hr) observed at a road section are 66, 62, 45, 79, 32, 51, 56, 60, 53, and 49. The median speed (expressed in km/hr) is _____
(Note: answer with one decimal accuracy)

11. The optimum value of the function $f(x) = x^2 - 4x + 2$ is

(A) 2 (maximum) (B) 2 (minimum)
(C) –2 (maximum) (D) –2 (minimum)

12. The Fourier series of the function,

$f(x) = 0, \quad -\pi < x \le 0$
$\quad = \pi - x, \quad 0 < x < \pi$

In the interval $[-\pi, \pi]$ is

$$f(x) = \frac{\pi}{4} + \frac{2}{\pi}\left[\frac{\cos x}{1^2} + \frac{\cos 3x}{3^2} + \ldots\ldots\right] + \left[\frac{\sin x}{1} + \frac{\sin 2x}{2} + \frac{\sin 3x}{3} + \ldots\ldots\right].$$

The convergence of the above Fourier series at x = 0 gives

(A) $\sum_{n=1}^{\infty} \frac{1}{n^2} = \frac{\pi^2}{6}$ (B) $\sum_{n=1}^{\infty} \frac{(-1)^{n+1}}{n^2} = \frac{\pi^2}{12}$

(C) $\sum_{n=1}^{\infty} \frac{1}{(2n-1)^2} = \frac{\pi^2}{8}$ (D) $\sum_{n=1}^{\infty} \frac{(-1)^{n+1}}{2n-1} = \frac{\pi}{4}$

13. X and Y are two random independent events. It is known that P(X) = 0.40 and $P(X \cup Y^C) = 0.7$. Which one of the following is the value of $P(X \cup Y)$?

(A) 0.7 (B) 0.5
(C) 0.4 (D) 0.3

14. What is value of $\lim_{\substack{x \to 0 \\ y \to 0}} \frac{xy}{x^2 + y^2}$?

(A) 1 (B) –1
(C) 0 (D) Limit does not exist

15. Consider the following linear system.

$x + 2y - 3z = a$
$2x + 3y + 3z = b$
$5x + 9y - 6z = c$

This system is consistent if a, b and c satisfy the equation

(A) $7a - b - c = 0$ (B) $3a + b - c = 0$
(C) $3a - b + c = 0$ (D) $7a - b + c = 0$

16. If f(x) and g(x) are two probability density functions,

$$f(x) = \begin{cases} \frac{x}{a}+1 & : -a \le x \le 0 \\ -\frac{x}{a}+1 & : 0 \le x \le a \\ 0 & : \text{otherwise} \end{cases}$$

$$g(x) = \begin{cases} -\frac{x}{a} & : -a \le x < 0 \\ \frac{x}{a} & : 0 \le x \le a \\ 0 & : \text{otherwise} \end{cases}$$

Which one of the following statements is true?

(A) Mean of f(x) and g(x) are same; Variance of f(x) and g(x) are same
(B) Mean of f(x) and g(x) are same; Variance of f(x) and g(x) are different
(C) Mean of f(x) and g(x) are different; Variance of f(x) and g(x) are same
(D) Mean of f(x) and g(x) are different; Variance of f(x) and g(x) are different

17. The angle of intersection of the curves $x^2 = 4y$ and $y^2 = 4x$ at point (0, 0) is

(A) 0° (B) 30°
(C) 45° (D) 90°

18. The area between the parabola $x^2 = 8y$ and the straight line y = 8 is _____.

19. The quadratic approximation of $f(x) = x^3 - 3x^2 - 5$ at the point x = 0 is

(A) $3x^2 - 6x - 5$ (B) $-3x^2 - 5$
(C) $-3x^2 + 6x - 5$ (D) $3x^2 - 5$

2017

1. The matrix P is the inverse of a matrix Q. If I denotes the identity matrix, which one of the following options is correct?

(A) PQ = I but QP ≠ I
(B) QP = I but PQ ≠ I
(C) PQ = I but QP = I
(D) PQ – QP = I

2. The number of parameters in the univariate exponential and Gaussian distributions, respectively, are

(A) 2 and 2 (B) 1 and 2
(C) 2 and 1 (D) 1 and 1

3. Let x be a continuous variable defined over the interval (–∞, ∞), and $f(x) = e^{-x-e^{-x}}$. The integral $g(x) = \int f(x)\,dx$ is equal to

(A) $e^{e^{-x}}$ (B) $e^{-e^{-x}}$
(C) $e^{-e^{x}}$ (D) e^{-x}

4. Consider the following partial differential equation:

$$3\frac{\partial^2\phi}{\partial x^2}+B\frac{\partial^2\phi}{\partial x\partial y}+3\frac{\partial^2\phi}{\partial y^2}+4\phi = 0$$

For this equation to be classified as parabolic, the value of B^2 must be _____.

5. $\lim\limits_{x\to 0}\left(\frac{\tan x}{x^2-x}\right)$ is equal to _____.

6. For the function f(x) = a + bx, $0 \le x \le 1$, to be a valid probability density function, which one of the following statements is correct?

(A) a = 1, b = 4 (B) a = 0.5, b = 1
(C) a = 0, b = 1 (D) a = 1, b = –1

7. The solution of the equation $\frac{dQ}{dt}+Q = 1$ with Q = 0 at t = 0 is

(A) $Q(t) = e^{-t} - 1$ (B) $Q(t) = 1 + e^{-t}$
(C) $Q(t) = 1 - e^{t}$ (D) $Q(t) = 1 - e^{-t}$

8. Consider the matrix $\begin{bmatrix}5 & -1\\ 4 & 1\end{bmatrix}$. Which one of the following statements is TRUE for the eigenvalues and eigenvectors of this matrix?

(A) Eigenvalue 3 has a multiplicity of 2, and only one independent eigenvector exists.
(B) Eigenvalue 3 has a multiplicity of 2, and two independent eigenvectors exist.
(C) Eigenvalue 3 has a multiplicity of 2, and no independent eigenvector exists.
(D) Eigenvalues are 3 and –3, and two independent eigenvectors exist.

9. Consider the equation $\frac{du}{dt} = 3t^2 + 1$ with u = 0 at t = 0. This numerically solved by using the forward Euler method with a step size, $\Delta t = 2$. The absolute error in the solution at the end of the first time step is _____.

10. Consider the following simultaneous equations (with c_1 and c_2 being constants):

$3x_1 + 2x_2 = c_1$
$4x_1 + x_2 = c_2$

The characteristic equation for these simultaneous equations is

(A) $\lambda^2 - 4\lambda - 5 = 0$ (B) $\lambda^2 - 4\lambda + 5 = 0$
(C) $\lambda^2 + 4\lambda - 5 = 0$ (D) $\lambda^2 + 4\lambda + 5 = 0$

11. Let w = f(x, y), where x and y are functions of t. Then, according to the chain rule, $\frac{dw}{dt}$ is equal to

(A) $\frac{dw}{dx}\frac{dx}{dt}+\frac{dw}{dy}\frac{dt}{dt}$ (B) $\frac{\partial w}{\partial x}\frac{\partial x}{\partial t}+\frac{\partial w}{\partial y}\frac{\partial y}{\partial t}$

(C) $\frac{\partial w}{\partial x}\frac{dx}{dt}+\frac{\partial w}{\partial y}\frac{dy}{dt}$ (D) $\frac{dw}{dx}\frac{\partial x}{\partial t}+\frac{dw}{dy}\frac{\partial y}{\partial t}$

12. The divergence of the vector field $\mathbf{V} = x^2\,\mathbf{i} + 2\,y^3\,\mathbf{j} + z^4\,\mathbf{k}$ at x = 1, y = 2, z = 3 is _____.

13. A two-faced fair coin has its faces designed as head (H) and tail (T). This coin is tossed three times in succession to record the following outcomes: H, H, H. If the coin is tossed one more time, the probability (up to one decimal place) of obtaining H again, given the previous realizations of H, H and H, would be _____.

14. The tangent to the curve represented by y = x ln x is required to have 45° inclination with the x-axis. The coordinate of the tangent point would be

(A) (1, 0) (B) (0, 1)

(C) (1, 1) (D) $(\sqrt{2}, \sqrt{2})$

15. Consider the following definite integral:

$$I = \int_0^1 \frac{(\sin^{-1} x)^2}{\sqrt{1-x^2}}\,dx$$

The value of the integral is

(A) $\frac{\pi^3}{24}$ (B) $\frac{\pi^3}{12}$

(C) $\frac{\pi^3}{48}$ (D) $\frac{\pi^3}{64}$

16. If $A = \begin{bmatrix} 1 & 5 \\ 6 & 2 \end{bmatrix}$ and $B = \begin{bmatrix} 3 & 7 \\ 8 & 4 \end{bmatrix}$. AB^T is equal to

(A) $\begin{bmatrix} 38 & 28 \\ 32 & 56 \end{bmatrix}$ (B) $\begin{bmatrix} 3 & 40 \\ 42 & 8 \end{bmatrix}$

(C) $\begin{bmatrix} 43 & 27 \\ 34 & 50 \end{bmatrix}$ (D) $\begin{bmatrix} 38 & 32 \\ 28 & 56 \end{bmatrix}$

17. Consider the following second-order differential equation:

$$y'' - 4y' + 3y = 2t - 3t^2$$

The particular solution of the differential equation is

(A) $-2 - 2t - t^2$ (B) $-2t - t^2$

(C) $2t - 3t^2$ (D) $-2 - 2t - 3t^2$

2018

1. Which one of the following matrices is singular?

(A) $\begin{bmatrix} 2 & 5 \\ 1 & 3 \end{bmatrix}$ (B) $\begin{bmatrix} 3 & 2 \\ 2 & 3 \end{bmatrix}$

(C) $\begin{bmatrix} 2 & 4 \\ 3 & 6 \end{bmatrix}$ (D) $\begin{bmatrix} 4 & 3 \\ 6 & 2 \end{bmatrix}$

2. For the given orthogonal matrix Q,

$$Q = \begin{bmatrix} 3/7 & 2/7 & 6/7 \\ -6/7 & 3/7 & 2/7 \\ 2/7 & 6/7 & -3/7 \end{bmatrix}$$

The inverse is

(A) $\begin{bmatrix} 3/7 & 2/7 & 6/7 \\ -6/7 & 3/7 & 2/7 \\ 2/7 & 6/7 & -3/7 \end{bmatrix}$ (B) $\begin{bmatrix} -3/7 & -2/7 & -6/7 \\ 6/7 & -3/7 & -2/7 \\ -2/7 & -6/7 & 3/7 \end{bmatrix}$

(C) $\begin{bmatrix} 3/7 & -6/7 & 2/7 \\ 2/7 & 3/7 & 6/7 \\ 6/7 & 2/7 & -3/7 \end{bmatrix}$ (D) $\begin{bmatrix} -3/7 & 6/7 & -2/7 \\ -2/7 & -3/7 & -6/7 \\ -6/7 & -2/7 & 3/7 \end{bmatrix}$

3. At the point x = 0, the function f (x) = x^3 has
   (A) local maximum
   (B) local minimum
   (C) both local maximum and minimum
   (D) neither local maximum nor local minimum

4. The value of the integral $\int_0^{\pi} x\cos^2 x\,dx$ is

(A) $\pi^2/8$ (B) $\pi^2/4$

(C) $\pi^2/2$ (D) π^2

5. The solution at x = 1, t = 1 of the partial differential equation $\frac{\partial^2 u}{\partial x^2} = 25\frac{\partial^2 u}{\partial t^2}$ subject to initial conditions of u (0) = 3x and $\frac{\partial u}{\partial t}(0) = 3$ is _____

(A) 1 (B) 2

(C) 4 (D) 6

6. The solution (up to three decimal places) at x = 1 of the differential equation $\frac{d^2y}{dx^2} + 2\frac{dy}{dx} + y = 0$ subject to boundary conditions y (0) = 1 and $\frac{dy}{dx}(0) = -1$ is _____

7. Variation of water depth (y) in a gradually varied open channel flow is given by the first order differential equation

$$\frac{dy}{dx} = \frac{1 - e^{-\frac{10}{3}\ln(y)}}{250 - 45e^{-3\ln(y)}}$$

Given initial condition: y (x = 0) = 0.8 m. The depth (in m, up to three decimal places of flow at a downstream section at x = 1 m from one calculation step of single step Euler Method is _____

8. The solution of the equation $x\frac{dy}{dx}+y=0$ passing through the point (I, I) is

(A) x (B) x^2
(C) x^{-1} (D) x^{-2}

9. The graph of a function f(x) is shown in the figure.

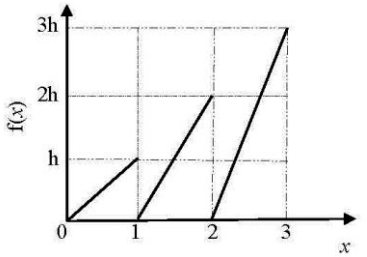

For f (x) to be a valid probability density function, the value of h is

(A) 1/3 (B) 2/3
(C) 1 (D) 3

10. A probability distribution with right skew is shown in the figure.

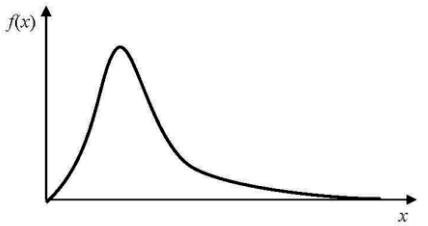

The correct statement for the probability distribution is

(A) Mean is equal to mode
(B) Mean is greater than median but less than mode
(C) Mean is greater than median and mode
(D) Mode is greater than median

11. Probability (up to one decimal place) of consecutively picking 3 red balls without replacement from a box containing 5 red balls and 1 white ball is _____

12. The quadratic equation $2x^2 - 3x + 3 = 0$ is to be solved numerically starting with an initial guess as $x_0 = 2$. The new estimate of x after the first iteration using Newton–Raphson method is _____

13. The matrix $\begin{pmatrix} 2 & -4 \\ 4 & -2 \end{pmatrix}$ has

(A) real eigenvalues and eigenvectors
(B) real eigenvalues but complex eigenvectors
(C) complex eigenvalues but real eigenvectors
(D) complex eigenvalues and eigenvectors

14. The Laplace transform F(s) of the exponential function, $f(t) = e^{at}$ when $t \geq 0$, where a is a constant and $(s - a) > 0$, is

(A) $\frac{1}{s+a}$ (B) $\frac{1}{s-a}$

(C) $\frac{1}{a-s}$ (D) ∞

15. The rank of the following matrix is

$$\begin{pmatrix} 1 & 1 & 0 & -2 \\ 2 & 0 & 2 & 2 \\ 4 & 1 & 3 & 1 \end{pmatrix}$$

(A) 1 (B) 2

(C) 3 (D) 4

16. The value (up to two decimal places) of a line integral $\int_c \vec{F}(\vec{r}).d\vec{r}$, for $\vec{F}(\vec{r}) = x^2\hat{i} + y^2\hat{j}$ along C which is a straight line joining (0, 0) to (1, 1) is _____

2019

1. Which one of the following is correct?

(A) $\lim_{x\to 0}\left(\frac{\sin 4x}{\sin 2x}\right) = 2$ and $\lim_{x\to 0}\left(\frac{\tan x}{x}\right) = 1$

(B) $\lim_{x\to 0}\left(\frac{\sin 4x}{\sin 2x}\right) = 1$ and $\lim_{x\to 0}\left(\frac{\tan x}{x}\right) = 1$

(C) $\lim_{x\to 0}\left(\frac{\sin 4x}{\sin 2x}\right) = \infty$ and $\lim_{x\to 0}\left(\frac{\tan x}{x}\right) = 1$

(D) $\lim_{x\to 0}\left(\frac{\sin 4x}{\sin 2x}\right) = 2$ and $\lim_{x\to 0}\left(\frac{\tan x}{x}\right) = \infty$

2. For a small value of h, the Taylor series expansion for f(x + h) is

(A) $f(x) + hf'(x) + \frac{h^2}{2!}f''(x) + \frac{h^3}{3!}f'''(x) + ...\infty$

(B) $f(x) - hf'(x) + \frac{h^2}{2!}f''(x) - \frac{h^3}{3!}f'''(x) + ...\infty$

(C) $f(x) + hf'(x) + \frac{h^2}{2}f''(x) + \frac{h^3}{3}f'''(x) + ...\infty$

(D) $f(x) - hf'(x) + \frac{h^2}{2}f''(x) - \frac{h^3}{3}f'''(x) + ...\infty$

3. Which one of the following is NOT a correct statement?
   (A) The function $\sqrt[x]{x}$, (x > 0), has the global maxima at x = e
   (B) The function $\sqrt[x]{x}$, (x > 0), has the global minima at x = e
   (C) The function x^3 has neither global minima nor global maxima
   (D) The function $|x|$ has the global minima at x = 0

4. A one–dimensional domain is discretized into N sub–domains of width Δx with node numbers i = 0, 1, 2, 3, ……, N. If the time scale is discretized in steps of Δt, the forward time and centered space finite difference approximation at i^{th} node and n^{th} time step, for the partial differential equation $\frac{\partial v}{\partial t} = \beta \frac{\partial^2 v}{\partial x^2}$ is

   (A) $$\frac{v_i^{(n+1)} - v_i^{(n)}}{\Delta t} = \beta \left[\frac{v_{i+1}^{(n)} - 2v_i^{(n)} + v_{i-1}^{(n)}}{(\Delta x)^2} \right]$$

   (B) $$\frac{v_{i+1}^{(n+1)} - v_i^{(n)}}{\Delta t} = \beta \left[\frac{v_{i+1}^{(n)} - 2v_i^{(n)} + v_{i-1}^{(n)}}{2\Delta x} \right]$$

   (C) $$\frac{v_i^{(n)} - v_i^{(n-1)}}{\Delta t} = \beta \left[\frac{v_{i+1}^{(n)} - 2v_i^{(n)} + v_{i-1}^{(n)}}{(\Delta x)^2} \right]$$

   (D) $$\frac{v_i^{(n)} - v_i^{(n-1)}}{2\Delta t} = \beta \left[\frac{v_{i+1}^{(n)} - 2v_i^{(n)} + v_{i-1}^{(n)}}{2\Delta x} \right]$$

5. Consider the ordinary differential equation $x^2 \frac{d^2y}{dx^2} - 2x\frac{dy}{dx} + 2y = 0$. Given the values of y(1) = 0 and y(2) = 2, the value of y(3) (round off to 1 decimal place), is _____.

6. Euclidean norm (length) of the vector $\begin{bmatrix} 4 & -2 & -6 \end{bmatrix}^T$ is
   (A) $\sqrt{12}$ (B) $\sqrt{24}$
   (C) $\sqrt{48}$ (D) $\sqrt{56}$

7. The Laplace transform of sinh (at) is
   (A) $\frac{a}{s^2 - a^2}$ (B) $\frac{a}{s^2 + a^2}$
   (C) $\frac{s}{s^2 - a^2}$ (D) $\frac{s}{s^2 + a^2}$

8. The following inequality is true for all x close to 0.

$$2-\frac{x^2}{3}<\frac{x\sin x}{1-\cos x}<2$$

What is the value of $\lim_{x\to 0}\frac{x\sin x}{1-\cos x}$?

(A) 0 (B) 1/2
(C) 1 (D) 2

9. What is curl of the vector field $2x^2\,yi + 5z^2\,j - 4yzk$?

(A) $6zi + 4x\mathbf{j} - 2x^2\mathbf{k}$ (B) $6zi - 8xy\mathbf{j} + 2x^2\,y\mathbf{k}$
(C) $-14zi + 6y\mathbf{j} + 2x^2\mathbf{k}$ (D) $-14zi - 2x^2\,\mathbf{k}$

10. The value of the function f(x) is given at n distinct values of x and its value is to be interpolated at the point x*, using all the n points. The estimate is obtained first by the Lagrange polynomial, denoted by I_L, and then by the Newton polynomial, denoted by I_N. Which one of the following statements is correct?

(A) I_L is always greater than I_N
(B) I_L and I_N are always equal
(C) I_L is always less than I_N
(D) No definite relation exists between I_L and I_N.

11. The probability density function of a continuous random variable distributed uniformly between x and y (for $y > x$) is

(A) $\frac{1}{x-y}$ (B) $\frac{1}{y-x}$
(C) $x - y$ (D) $y - x$

12. Consider the hemi–spherical tank of radius 13m as shown in the figure (not drawn to scale). What is the volume of water (in m^3) when the depth of water at the centre of the tank is 6m?

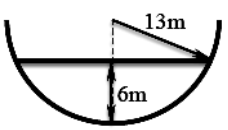

(A) 78π (B) 156π
(C) 396π (D) 468π

13. An ordinary differential equation is given below.

$$\left(\frac{dy}{dx}\right)(x\ln x)=y$$

The solution for the above equation is
(Note: K denotes a constant in the options)

(A) $y = Kx\ln x$ (B) $y = Kxe^{x}$
(C) $y = Kxe^{-x}$ (D) $y = K\ln x$

14. The inverse of the matrix $\begin{bmatrix} 2 & 3 & 4 \\ 4 & 3 & 1 \\ 1 & 2 & 4 \end{bmatrix}$ is

(A) $\begin{bmatrix} 10 & -4 & -9 \\ -15 & 4 & 14 \\ 5 & -1 & -6 \end{bmatrix}$

(B) $\begin{bmatrix} -10 & 4 & 9 \\ 15 & -4 & -14 \\ -5 & 1 & 6 \end{bmatrix}$

(C) $\begin{bmatrix} -2 & \frac{4}{5} & \frac{9}{5} \\ 3 & -\frac{4}{5} & -\frac{14}{5} \\ -1 & \frac{1}{5} & \frac{6}{5} \end{bmatrix}$

(D) $\begin{bmatrix} 2 & -\frac{4}{5} & -\frac{9}{5} \\ -3 & \frac{4}{5} & \frac{14}{5} \\ 1 & -\frac{1}{5} & -\frac{6}{5} \end{bmatrix}$

15. A series of perpendicular offsets taken from a curved boundary wall to a straight survey line at an interval of 6 m are 1.22, 1.67, 2.04, 2.34, 2.14, 1.87 and 1.15 m. The area (in m^2, round off to 2 decimal places) bounded by the survey line, curved boundary wall, the first and the last offsets, determined using Simpson's rule, is _____.

2020

1. In the following partial differential equation, θ is a function of t and z, and D and K are functions of θ

$$D(\theta)\frac{\partial^2\theta}{\partial z^2} + \frac{\partial K(\theta)}{\partial z} - \frac{\partial\theta}{\partial t} = 0$$

The above equation is

(A) a second order linear equation
(B) a second degree linear equation
(C) a second order non-linear equation
(D) a second degree non-linear equation

2. The value of $\lim_{x\to\infty} \frac{x^2 - 5x + 4}{4x^2 + 2x}$ is

(A) 0
(B) $\frac{1}{4}$
(C) $\frac{1}{2}$
(D) 1

3. The true value of ln(2) is 0.69. If the value of ln(2) is obtained by linear interpolation between ln(1) and ln(6). The percentage of absolute error (round off to the nearest integer), is

(A) 35
(B) 48
(C) 69
(D) 84

4. The area of an ellipse represented by an equation $\frac{x^2}{a^2}+\frac{y^2}{b^2}=1$ is

(A) $\frac{\pi ab}{4}$ (B) $\frac{\pi ab}{2}$

(C) πab (D) $\frac{4\pi ab}{3}$

5. The probability that a 50 year flood may **NOT** occur at all during 25 years life of a project (round off to two decimal places), is _____.

6. For the Ordinary Differential Equation $\frac{d^2x}{dt^2}-5\frac{dx}{dt}+6x=0$, with initial conditions x(0) = 0 and $\frac{dx}{dt}(0)=10$, the solution is

(A) $-5e^{2t} + 6e^{3t}$ (B) $5e^{2t} + 6e^{3t}$

(C) $-10e^{2t} + 10e^{3t}$ (D) $10e^{2t} + 10e^{3t}$

7. A continuous function f(x) is defined. If the third derivative at x_i is to be computed by using the fourth order central finite-divided-difference scheme (with step length = h), the correct formula is

(A) $f'''(x_i)=\frac{-f(x_{i+3})+8f(x_{i+2})-13f(x_{i+1})+13f(x_{i-1})-8f(x_{i-2})+f(x_{i-3})}{8h^3}$

(B) $f'''(x_i)=\frac{f(x_{i+3})-8f(x_{i+2})-13f(x_{i+1})+13f(x_{i-1})+8f(x_{i-2})+f(x_{i-3})}{8h^3}$

(C) $f'''(x_i)=\frac{-f(x_{i+3})-8f(x_{i+2})-13f(x_{i+1})+13f(x_{i-1})+8f(x_{i-2})-f(x_{i-3})}{8h^3}$

(D) $f'''(x_i)=\frac{f(x_{i+3})-8f(x_{i+2})+13f(x_{i+1})+13f(x_{i-1})-8f(x_{i-2})-f(x_{i-3})}{8h^3}$

8. If C represents a line segment between (0, 0, 0) and (1, 1, 1) in Cartesian coordinate system, the value (expressed as integer) of the line integral

$$\int_C\left[(y+z)\,dx+(x+z)\,dy+(x+y)\,dz\right]$$

is _____.

9. Consider the system of equations

$$\begin{bmatrix}1 & 3 & 2\\ 2 & 2 & -3\\ 4 & 4 & -6\\ 2 & 5 & 2\end{bmatrix}\begin{bmatrix}x_1\\ x_2\\ x_3\end{bmatrix}=\begin{bmatrix}1\\ 1\\ 2\\ 1\end{bmatrix}$$

The value of x_3 (round off to the nearest integer), is _____.

10. The ordinary differential equation $\frac{d^2u}{dx^2} - 2x^2u + \sin x = 0$ is

(A) linear and homogeneous
(B) linear and nonhomogeneous
(C) nonlinear and homogeneous
(D) nonlinear and nonhomogeneous

11. The value of $\lim_{x\to\infty} \frac{\sqrt{9x^2 + 2020}}{x+7}$ is

(A) $\frac{7}{9}$
(B) 1
(C) 3
(D) indeterminable

12. The integral

$$\int_0^1 \left(5x^3 + 4x^2 + 3x + 2\right)dx$$

is estimated numerically using three alternative methods namely the rectangular, trapezoidal and Simpson's rules with a common step size. In this context, which one of the following statements is **TRUE**?

(A) Simpson's rule as well as rectangular rule of estimation will give Non–zero error.
(B) Simpson's rule, rectangular rule as well as trapezoidal rule of estimation will give Non–zero error.
(C) Only the rectangular rule of estimation will give zero error.
(D) Only Simpson's rule of estimation will give zero error.

13. The following partial differential equation is defined for u : u (x, y)

$$\frac{\partial u}{\partial y} = \frac{\partial^2 u}{\partial x^2};\ \ y \ge 0;\ x_1 \le x \le x_2$$

The set of auxiliary conditions necessary to solve the equation uniquely, is

(A) three initial conditions
(B) three boundary conditions
(C) two initial conditions and one boundary condition
(D) one initial condition and two boundary conditions

14. A fair (unbiased) coin is tossed 15 times. The probability of getting exactly 8 Heads (round off to three decimal places), is _____.

15. An ordinary differential equation is given below

$$6\frac{d^2y}{dx^2} + \frac{dy}{dx} - y = 0$$

The general solution of the above equation (with constants C_1 and C_2), is

(A) $y(x) = C_1 e^{-(x/3)} + C_2 e^{(x/2)}$
(B) $y(x) = C_1 e^{(x/3)} + C_2 e^{-(x/2)}$
(C) $y(x) = C_1 xe^{-(x/3)} + C_2 e^{(x/2)}$
(D) $y(x) = C_1 e^{-(x/3)} + C_2 xe^{-(x/2)}$

16. A 4×4 matrix [P] is given below

$$[P] = \begin{bmatrix} 0 & 1 & 3 & 0 \\ -2 & 3 & 0 & 0 \\ 0 & 0 & 6 & 1 \\ 0 & 0 & 1 & 6 \end{bmatrix}$$

The eigenvalues of [P] are

(A) 0, 3, 6, 6 (B) 1, 2, 3, 4
(C) 3, 4, 5, 7 (D) 1, 2, 5, 7

17. The Fourier series to represent $x - x^2$ for $-\pi \le x \le \pi$ is given by

$$x - x^2 = \frac{a_0}{2} + \sum_{n=1}^{\infty} a_n \cos nx + \sum_{n=1}^{\infty} b_n \sin nx$$

The value of a_0 (*round off to two decimal places*), is _____.

2021

1. The rank of matrix $\begin{bmatrix} 1 & 2 & 2 & 3 \\ 3 & 4 & 2 & 5 \\ 5 & 6 & 2 & 7 \\ 7 & 8 & 2 & 9 \end{bmatrix}$ is

(A) 1 (B) 2 (C) 3 (D) 4

2. If $P = \begin{bmatrix} 1 & 2 \\ 3 & 4 \end{bmatrix}$ and $Q = \begin{bmatrix} 0 & 1 \\ 1 & 0 \end{bmatrix}$ then $Q^T P^T$ is

(A) $\begin{bmatrix} 1 & 2 \\ 3 & 4 \end{bmatrix}$ (B) $\begin{bmatrix} 1 & 3 \\ 2 & 4 \end{bmatrix}$ (C) $\begin{bmatrix} 2 & 1 \\ 4 & 3 \end{bmatrix}$ (D) $\begin{bmatrix} 2 & 4 \\ 1 & 3 \end{bmatrix}$

3. The shape of the cumulative distribution function of Gaussian distribution is

(A) Horizontal line (B) Straight line at 45 degree angle
(C) Bell-shaped (D) S-shaped

4. Consider the limit, $\lim_{x \to 1} \left(\frac{1}{\ln x} - \frac{1}{x-1} \right)$

The limit (*correct up to one decimal place*) is _____ .

5. The volume determined from $\iiint_V 8xyz\, dV$ for $V = [2, 3] \times [1, 2] \times [0, 1]$ will be (*in integer*) _____ .

6. The solution of the second-order differential equation $\frac{d^2y}{dx^2} + 2\frac{dy}{dx} + y = 0$ with boundary conditions $y(0) = 1$ and $y(1) = 3$ is

(A) $e^{-x} + (3e - 1)\, xe^{-x}$ (B) $e^{-x} - (3e - 1)\, xe^{-x}$
(B) $e^{-x} + \left[3e \sin\left(\frac{\pi x}{2}\right) - 1 \right] xe^{-x}$ (D) $e^{-x} - \left[3e \sin\left(\frac{\pi x}{2}\right) - 1 \right] xe^{-x}$

7. The value of $\int_0^1 e^x\,dx$ using the trapezoidal rule with four equal subintervals is

(A) 1.718 (B) 1.727 (C) 2.192 (D) 2.718

8. The value of $\lim_{x\to\infty} \frac{x\,ln(x)}{1+x^2}$ is

(A) 0 (B) 1.0 (C) 0.5 (D) ∞

9. The rank of the matrix $\begin{bmatrix} 5 & 0 & -5 & 0 \\ 0 & 2 & 0 & 1 \\ -5 & 0 & 5 & 0 \\ 0 & 1 & 0 & 2 \end{bmatrix}$ is

(A) 1 (B) 2 (C) 3 (D) 4

10. The unit normal vector to the surface $X^2 + Y^2 + Z^2 - 48 = 0$ at the point (4, 4, 4) is

(A) $\frac{1}{\sqrt{2}}, \frac{1}{\sqrt{2}}, \frac{1}{\sqrt{2}}$ (B) $\frac{1}{\sqrt{3}}, \frac{1}{\sqrt{3}}, \frac{1}{\sqrt{3}}$

(C) $\frac{2}{\sqrt{2}}, \frac{2}{\sqrt{2}}, \frac{2}{\sqrt{2}}$ (D) $\frac{1}{\sqrt{5}}, \frac{1}{\sqrt{5}}, \frac{1}{\sqrt{5}}$

11. If A is a square matrix then orthogonality property mandates

(A) $AA^T = I$ (B) $AA^T = 0$ (C) $AA^T = A^{-1}$ (D) $AA^T = A^2$

12. The value (*round off to one decimal place*) of $\int_{-1}^{1} x e^{|x|}\,dx$ is _____ .

13. If k is a constant, the general solution of $\frac{dy}{dx} - \frac{y}{x} = 1$, will be in the form of

(A) y = x ln(kx) (B) y = k ln(kx) (C) y = x ln(x) (D) y = xk ln(k)

14. The smallest eigenvalue and the corresponding eigenvector of the matrix $\begin{bmatrix} 2 & -2 \\ -1 & 6 \end{bmatrix}$, respectively, are

(A) 1.55 and $\begin{Bmatrix} 2.00 \\ 0.45 \end{Bmatrix}$ (B) 2.00 and $\begin{Bmatrix} 1.00 \\ 1.00 \end{Bmatrix}$

(C) 1.55 and $\begin{Bmatrix} -2.55 \\ -0.45 \end{Bmatrix}$ (D) 1.55 and $\begin{Bmatrix} 2.00 \\ -0.45 \end{Bmatrix}$

15. A function is defined in Cartesian coordinate system as $f(x, y) = xe^y$. The value of the directional derivative of the function (*in integer*) at the point (2, 0) along the direction of the straight line segment from point (2, 0) to point $\left(\frac{1}{2}, 2\right)$ is _____ .

16. Numerically integrate, $f(x) = 10x - 20x^2$ from lower limit a = 0 to upper limit b = 0.5. Use Trapezoidal rule with five equal subdivisions. The value (in units, *round off to two decimal places*) obtained is _____ .

❑❑❑❑❑❑