Relational Database Design

Features of Good Relational Designs, Problems with bad design, Decomposition using concept of functional dependencies, Armstrong’s axioms, Closure of functional dependency, Closure of attribute, Introduction to process of Normalization and denormalization, Normal Forms- 1NF, 2NF, 3NF, BCNF, Denormalization

Need for Good Database Design

- Without a good database design, the database is likely to be unsatisfactory.
- A good database design must be implemented in such ways that the queries are written in a simple and easier manner.
- A good database design doesn’t have data redundancies (data redundancy refers to duplication of data.).
- The accuracy must be good enough after the implementation of good database design.

Features of Good Relational Designs

- Reflects **real-world structure** of the problem
- Can represent all expected data over time
- Avoids **redundant storage** of data items
- Provides **efficient access** to data
- Supports the maintenance of **data integrity** over time. Data integrity is the overall accuracy, completeness, and consistency of data
- **Clean**, **consistent**, and **easy** to understand. Consistency in database systems refers to the requirement that any given database transaction must change affected data only in allowed ways.

Significance of Database Design

- **Consistency** – Consistency refers to uniformity. A database design helps data to be stored which is relevant and required. It is one important feature in database design.
- **Cascading** – Consider a parent and a child record. The data present in child record is allowed if and only if the data is present in parent record. This prevent data repetition.
- **Redundancy** – It is duplication or repetition of data. It makes the database more complex and takes up the storage unnecessarily. The solution to data redundancy is normalization. It also reduces the size of database.
- **Queries** – A database design is said to be good, if its queries are simple and execution is faster.
- **Performance** – The database design is credited if the database design is good enough.
- **Maintenance** – The most important feature of a good database design. If it is a well designed database, it can be maintained well otherwise it might lead to many problems.

A badly designed database has the following problems:

- Related data is scattered over various **Tables**. A change must be updated at many places. It's possible that the information is only half present, it's there in one table, but missing in another one.
- Data is inconsistent or ambiguous.
- The database is unnecessary complex, hacked with lots of tricks. The database designer done unnecessary complex things, where it could have been done so much easier.
- The database has 'hidden' information, for example by the sequence of rows in a table.
- The **Database** is slow, inflexible, hard to extend and can not handle all real life situations
- Database scalability and management.

Functional Dependency (FD) and its types

What is Functional Dependency (FD)?

- Let R be a relation schema having n attributes A1, A2, A3,…, An.

Student

RollNo	Name	SPI	BL
101	Raju	8	0
102	Mitesh	7	1
103	Jay	7	0

- Let attributes X and Y are two subsets of attributes of relation R.
- If the **values of the X component of a tuple uniquely** (or functionally) **determine the values of the Y component**, then there is a **functional dependency from X to Y**.
- This is denoted by **X → Y** (i.e RollNo → Name, SPI, BL).
- It is referred as: **Y is functionally dependent on the X** or **X functionally determines Y**.

Diagrammatic representation of Functional Dependency (FD)

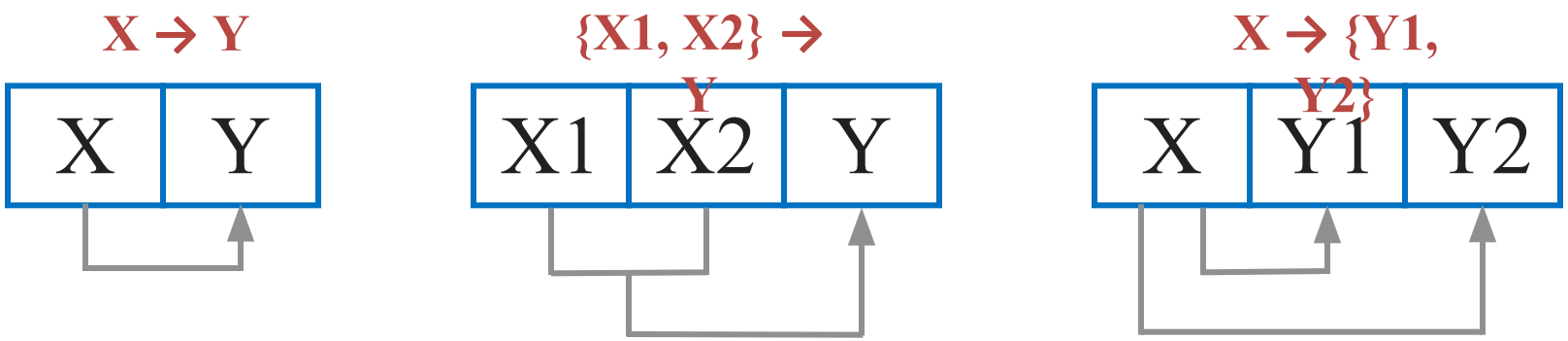

- Example
- Consider the relation Account(account_no, balance, branch).
- account_no can determine balance and branch.
- So, there is a functional dependency from account_no to balance and branch.
- This can be denoted by account_no → {balance, branch}.

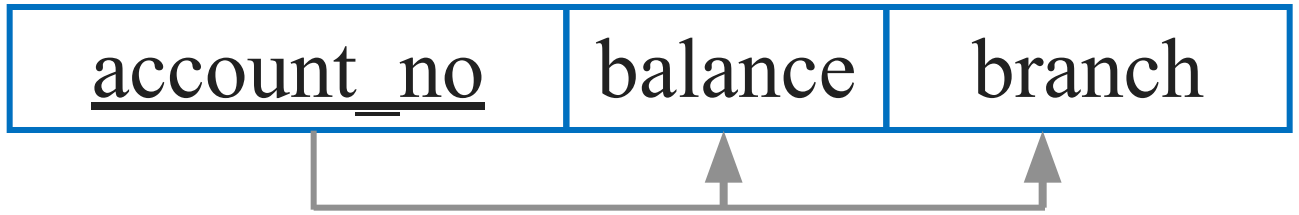

Types of Functional Dependency (FD)

- Full Functional Dependency
  - In a relation, the attribute B is fully functional dependent on A if **B is functionally dependent on A, but not on any proper subset of A**.
  - Eg. {Roll_No, Semester, Department_Name} → SPI
  - We **need all three {Roll_No, Semester, Department_Name} to find SPI**.

- Partial Functional Dependency
  - In a relation, the attribute B is partial functional dependent on A if **B is functionally dependent on A as well as on any proper subset of A**.
  - If there is some attribute that can be removed from A and the still dependency holds then it is partial functional dependency.
  - E.g. {Enrollment No, Department_Name} → SPI
  - **Enrollment_No is sufficient to find SPI**, Department_Name is not required to find SPI.

Types of Functional Dependency (FD)

- Transitive Functional Dependency
  - In a relation, if attribute(s) **A → B and B → C, then A → C (means C is transitively depends on A** via B).

Sub_Fac

Subject	Faculty	Age
DS	Shah	35
DBMS	Patel	32
DF	Shah	35

  - Eg. Subject → Faculty & Faculty → Age then Subject → Age
  - Therefore as per the rule of transitive dependency: Subject → Age should hold, that makes sense because if we know the subject name we can know the faculty's age.

Types of Functional Dependency (FD)

- Trivial Functional Dependency
  - X → Y is trivial FD if **Y is a subset of X**
  - Eg. {Roll_No, Department_Name, Semester} → Roll_No

- Nontrivial Functional Dependency
  - X → Y is nontrivial FD if **Y is not a subset of X**
  - Eg. {Roll_No, Department_Name, Semester} → Student_Name

Armstrong's axioms OR Inference rules

Armstrong's axioms OR Inference rules

- Armstrong's axioms are a set of rules used to infer (derive) all the functional dependencies on a relational database.

Reflexivity

- If B is a subset of A
  - then A → B

Augmentation

- If A → B
  - then AC → BC

Self-determination

- If A → A

Transitivity

- If A → B and B → C
  - then A → C

Pseudo Transitivity

- If A → B and BD → C
  - then AD → C

Decomposition

- If A → BC
  - then A → B and A → C

Union

- If A → B and A → C
  - then A → BC

Composition

- If A → B and C → D
  - then AC → BD

Closure of a set of FDs

What is closure of a set of FDs?

- Given a set F set of functional dependencies, there are certain other **functional dependencies that are logically implied by F**.
- E.g.: $F = \{A \rightarrow B \text{ and } B \rightarrow C\}$, then we can infer that $A \rightarrow C$ (by transitivity rule)
- The set of **functional dependencies (FDs) that is logically implied by F** is called the closure of F.
- It is denoted by $\mathbf{F^+}$.

Closure of a set of FDs

- Suppose we are given a relation schema **R(A,B,C,G,H,I)** and the set of functional dependencies are:
  - **F = (A → B, A → C, CG → H, CG → I, B → H)**
    - The functional dependency **A → H** is logical implied.

We have

A → B

B → H

→ Transitivity rule → **A → H**

Closure of a set of FDs [Example]

- Suppose we are given a relation schema **R(A,B,C,G,H,I)** and the set of functional dependencies are:
  - **F = (A → B, A → C, CG → H, CG → I, B → H)**
    - The functional dependency **CG → HI** is logical implied.

We have

CG → H

CG → I

→ Union rule → **CG → HI**

Closure of a set of FDs [Example]

- Suppose we are given a relation schema **R(A,B,C,G,H,I)** and the set of functional dependencies are:
  - **F = (A → B, A → C, CG → H, CG → I, B → H)**
    - The functional dependency **AG → I** is logical implied.

We have

A → C

CG → I

→ Pseudo-transitivity rule → **AG → I**

Closure of a set of FDs [Example]

- Suppose we are given a relation schema **R(A,B,C,G,H,I)** and the set of functional dependencies are:
  - **F = (A → B, A → C, CG → H, CG → I, B → H)**
    - The functional dependency **AG → I** is logical implied.

We have

A → C → Augmentation rule → **AG → CG**

AG → CG
CG → I → Transitivity rule → **AG → I**

Closure of a set of FDs [Example]

- Suppose we are given a relation schema **R(A,B,C,G,H,I)** and the set of functional dependencies are:
  - **F = (A → B, A → C, CG → H, CG → I, B → H)**
    - Find out the closure of F.

Several members of F^+ are

F^+ = (A → H, CG → HI, AG → I)

Closure of a set of FDs [Example]

- Compute the closure of the following set F of functional dependencies FDs for relational schema **R = (A,B,C,D,E,F):**
  - **F = (A → B, A → C, CD → E, CD → F, B → E)**
    - Find out the closure of F.

A → B & A → C	Union Rule	**A → BC**
CD → E & CD →	Union Rule	**CD → EF**
A → B & B → E	Transitivity Rule	**A → E**
A → C & CD →	Pseudo-transitivity Rule	**AD → E**
A → C & CD → F	Pseudo-transitivity Rule	**AD → F**

F^+ = (A → BC, CD → EF, A → E, AD → E, AD → F)

Closure of a set of FDs [Example]

- Compute the closure of the following set F of functional dependencies FDs for relational schema **R = (A,B,C,D,E):**
  - **F = (AB → C, D → AC, D → E)**
    - Find out the closure of F.

D → AC	Decomposition Rule	**D → A & D →**
D → AC & D → E	Union Rule	**D → ACE**

$$F^{+} = (D \rightarrow A, D \rightarrow C, D \rightarrow ACE)$$

Closure of attribute sets

- Section – 3

What is a closure of attribute sets?

- Given a set of attributes α, the closure of α under F is the **set of attributes that are functionally determined by α under F**.
- It is denoted by α^+.

What is a closure of attribute sets?

- Given a set of attributes α, the closure of α under F is the **set of attributes that are functionally determined by α under F**.
- It is denoted by α^+.

Algorithm

- Algorithm to compute α^+, the closure of α under F
  - Steps
    1. result = α
    2. *while* (changes to result) *do*
       - for each $\beta \rightarrow \gamma$ in F do
         - begin
           - if $\beta \subseteq$ result then result = result U γ
           - else result = result
         - end

Closure of attribute sets [Example]

- Consider the relation schema R = (A, B, C, G, H, I).
- For this relation, a set of functional dependencies F can be given as

  F = {A → B, A → C, CG → H, CG → I, B → H}
- Find out the closure of $(AG)^+$.

Algorithm

- Algorithm to compute α^+, the closure of α under F
  - Steps
    1. result = α
    2. *while* (changes to result) *do*
       - for each β → γ in F do
         - begin
           - if β ⊆ result then result = result U γ
           - else result = result
         - end

- Step 1.

  result = α => result = AG

A → B	A ⊆ AG	result = ABG
A → C	A ⊆ ABG	result = ABCG
CG →	CG ⊆ ABCG	result = ABCGH
CG → I	CG ⊆	result = ABCGHI
B → H	B ⊆ ABCGHI	result = ABCGHI

AG^+ = ABCGHI

Closure of attribute sets [Exercise]

- Given functional dependencies (FDs) for relational schema R = (A,B,C,D,E):
- $F = \{A \rightarrow BC,\ CD \rightarrow E,\ B \rightarrow D,\ E \rightarrow A\}$
  - Find Closure for A
  - Find Closure for CD
  - Find Closure for B
  - Find Closure for BC
  - Find Closure for E

Answer

$A^+ = ABCDE$

$CD^+ = ABCDE$

$B^+ = BD$

$BC^+ = ABCDE$

$E^+ = ABCDE$

Canonical cover

What is extraneous attributes?

- Let us consider a relation R with schema R = (A, B, C) and set of functional dependencies FDs **F = { AB → C, A → C }**.
- In **AB → C, B is extraneous attribute**. The reason is, there is another FD **A → C**, which means when **A alone can determine C**, the use of B is unnecessary (extra).
- An attribute of a functional dependency is said to be extraneous if we can **remove it without changing the closure of the set of functional dependencies**.

What is canonical cover?

- A canonical cover of F is a **minimal set of functional dependencies** equivalent to F, having **no redundant dependencies or redundant parts of dependencies**.
- It is denoted by $\mathbf{F_c}$
- A canonical cover for F is a set of dependencies F_c such that
  - **F logically implies** all dependencies in $\mathbf{F_c}$ and
  - $\mathbf{F_c}$ **logically implies** all dependencies in **F** and
  - **No** functional dependency in $\mathbf{F_c}$ contains an **extraneous attribute** and
  - Each **left side** of functional dependency in $\mathbf{F_c}$ is **unique**.

Decomposition Rule

$\mathbf{F = \{A \rightarrow B, A \rightarrow C\}}$

$\mathbf{F_c = \{A \rightarrow BC\}}$

Union Rule

Algorithm to find canonical cover

- *Repeat*
  - Use the **union rule** to replace any dependencies in F **$\alpha 1 \rightarrow \beta 1$** and **$\alpha 1 \rightarrow \beta 2$ with $\alpha 1 \rightarrow \beta 1 \beta 2$**
  - Find a functional dependency $\alpha \rightarrow \beta$ with an **extraneous attribute** either in α or in β

    /* Note: test for extraneous attributes done using F_c, not F */
    - If an **extraneous attribute is found, delete it** from $\alpha \rightarrow \beta$
- *until* F does not change

  /* Note: Union rule may become applicable after some extraneous attributes have been deleted, so it has to be re-applied */

Canonical cover [Example]

- Consider the relation schema R = (A, B, C) with FDs

  F = {A → BC, B → C, A → B, AB → C}
- **Find canonical cover.**

- Combine A → BC and A → B into A → BC (Union Rule)
  - Set is {A → BC, B → C, AB → C}
- A is extraneous in AB → C
  - Check if the result of deleting A from AB → C is implied by the other dependencies
    - Yes: in fact, B → C is already present
  - Set is {A → BC, B → C}
- C is extraneous in A → BC
  - Check if A → C is logically implied by A → B and the other dependencies
    - Yes: using transitivity on A → B and B → C.
  - The canonical cover is: **A → B, B → C**

Canonical cover [Example]

- Consider the relation schema R = (A, B, C, D, E, F) with FDs
  F = {A → BC, CD → E, B → D, E → A}
- Find canonical cover.

- The left side of each FD in F is unique.
- Also none of the attributes in the left side or right side of any of the FDs is extraneous.
- Therefore the canonical cover F_c is equal to F.
- F_c = {A → BC, CD → E, B → D, E → A}

Decomposition

What is decomposition?

- Decomposition is the **process of breaking down given relation** into **two or more relations**.
- Relation R is replaced by two or more relations in such a way that:
  - Each new relation contains a **subset** of the **attributes of R**
  - Together, they all **include all tuples** and **attributes of R**
- Types of decomposition
  - Lossy decomposition
  - Lossless decomposition (non-loss decomposition)

Lossy decomposition

- The decomposition of relation R into R1 and R2 is lossy when the join of R1 and R2 does not yield the same relation as in R.
- This is also referred as lossy-join decomposition.
- The disadvantage of such kind of decomposition is that some information is lost during retrieval of original relation.
- From practical point of view, decomposition should not be lossy decomposition.

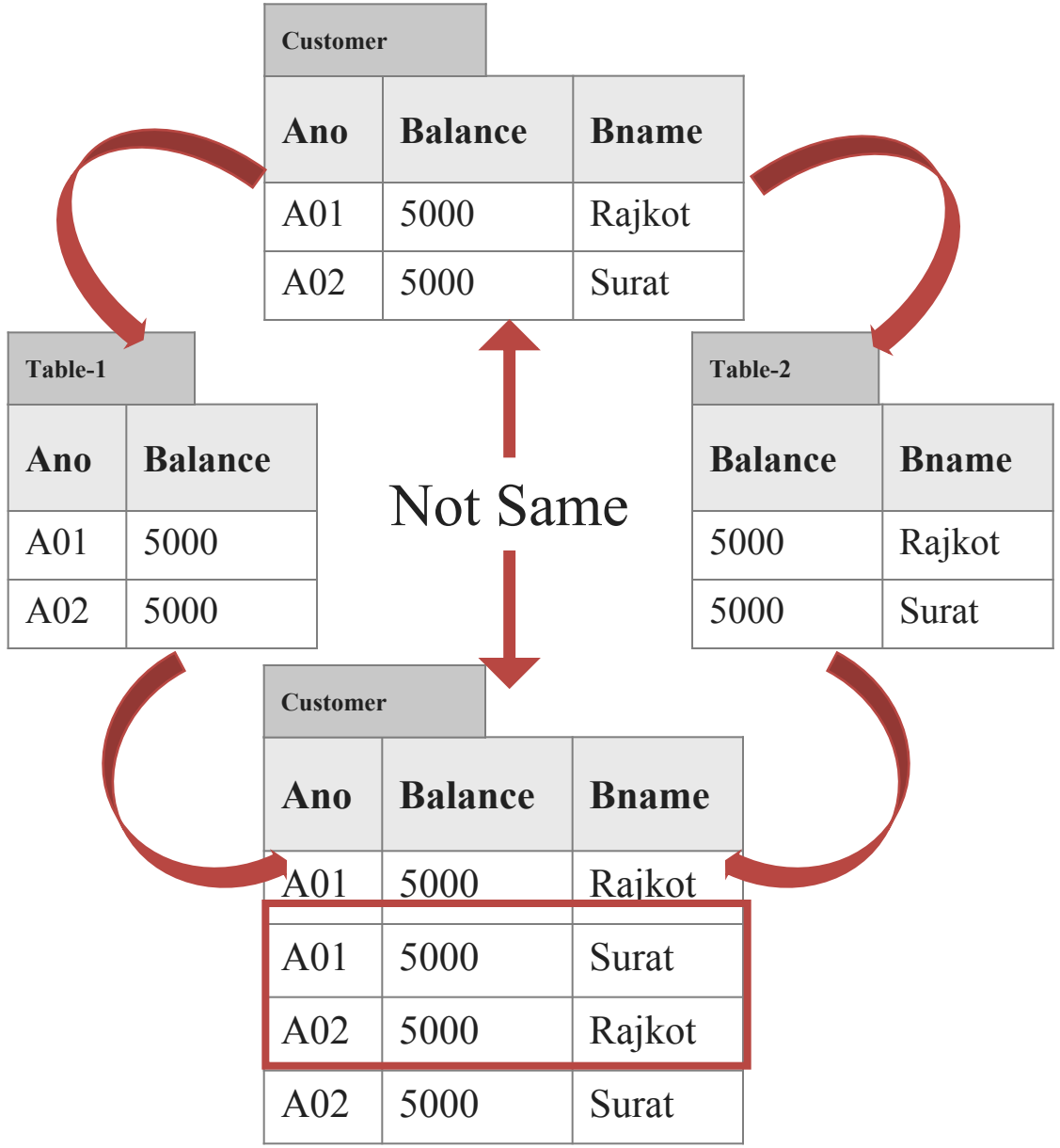

Lossless decomposition

- The decomposition of relation R into R1 and R2 is lossless when the join of R1 and R2 produces the same relation as in R.
- This is also referred as a non-additive (non-loss) decomposition.
- All decompositions must be lossless.

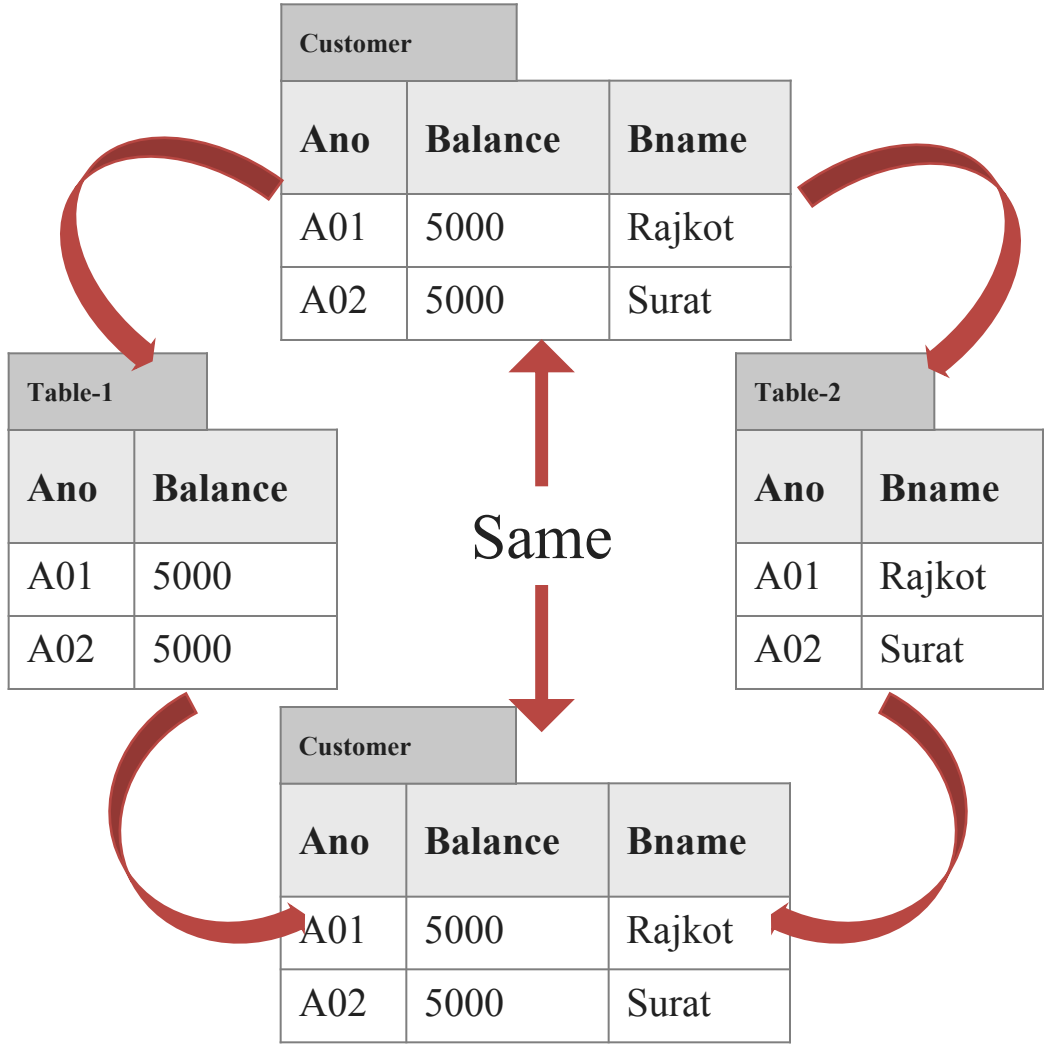

Anomaly and its types

What is an anomaly in database design?

- Anomalies are **problems that can occur in poorly planned, un-normalized database** where all the data are stored in one table.
- There are three types of anomalies that can arise in the database because of redundancy are
  - Insert anomaly
  - Delete anomaly
  - Update / Modification anomaly

Insert anomaly

- Consider a relation Emp_Dept(EID, Ename, City, DID, Dname, Manager) EID as a primary key

Emp_Dept

EID	Ename	City	DID	Dname	Manager
1	Raj	Mumbai	1	CE	Desai
2	Meet	Pune	1	CE	Desai
NULL	NULL	NULL	2	IT	NULL

An insert anomaly occurs when certain attributes cannot be inserted into the database without the presence of another attribute.

Want to insert new department detail (IT)

- Suppose a **new department (IT) has been started** by the organization but **initially there is no employee appointed** for that department.
- We **want to insert that department detail** in Emp_Dept table.
- But the **tuple for this department cannot be inserted** into this table as the **EID will have NULL value**, **which is not allowed because EID is primary key**.
- This kind of problem in the relation where some tuple cannot be inserted is known as insert anomaly.

Delete anomaly

- Consider a relation Emp_Dept(EID, Ename, City, DID, Dname, Manager) EID as a primary key

Emp_Dept

EID	Ename	City	DID	Dname	Manager
1	Raj	Mumbai	1	CE	Desai
2	Meet	Pune	1	CE	Desai
3	Jay	Baroda	2	IT	Dave

A delete anomaly exists when **certain attributes are lost because of the deletion of another attribute**.

Want to delete (Jay) employee's detail

- Now consider **there is only one employee in some department (IT)** and that **employee leaves the organization**.
- So we **need to delete tuple of that employee (Jay).**
- But in addition to that **information about the department also deleted**.
- This kind of problem in the relation where deletion of some tuples can lead to loss of some other data not intended to be removed is known as delete anomaly.

Update anomaly

- Consider a relation Emp_Dept(EID, Ename, City, Dname, Manager) EID as a primary key.

Emp_Dept

EID	Ename	City	Dname	Manager
1	Raj	Mumbai	CE	Desai
2	Meet	Pune	C.E	Desai
3	Jay	Baroda	Computer	Dave
4	Hari	Mumbai	IT	Dave

An update anomaly exists **when one or more records (instance) of duplicated data is updated, but not all**.

Want to update manager of CE department

- Suppose the **manager of a (CE) department has changed**, this requires that the **Manager in all the tuples corresponding to that department must be changed** to reflect the new status.
- If we **fail to update all the tuples of given department**, then **two different records of employee working in the same department might show different Manager lead to inconsistency** in the database.

How to deal with insert, delete and update anomaly

Emp_Dept

EID	Ename	City	DID	Dname	Manager
1	Raj	Mumbai	1	CE	Desai
2	Meet	Pune	1	C.E	Desai
3	Jay	Baroda	2	IT	Dave
NU	NULL	NULL	3	EC	NULL

Emp

EID	Ename	City	DID
1	Raj	Mumbai	1
2	Meet	Pune	1
3	Jay	Baroda	2

Dept

DID	Dname	Manager
1	CE	Desai
2	IT	Dave
3	EC	NULL

Such type of anomalies in the database design can be solved by using **normalization.**

Normalization and normal forms

What is normalization?

- Normalization is the **process of removing redundant data** from tables **to improve data integrity, scalability and storage efficiency**.
  - data integrity (completeness, accuracy and consistency of data)
  - scalability (ability of a system to continue to function well in a growing amount of work)
  - storage efficiency (ability to store and manage data that consumes the least amount of space)

- What we do in normalization?
  - Normalization generally involves **splitting an existing table into multiple (more than one) tables**, which can be **re-joined or linked** each time a query is issued (executed).

How many normal forms are there?

- Normal forms:
  - 1NF (First normal form)
  - 2NF (Second normal form)
  - 3NF (Third normal form)
  - BCNF (Boyce–Codd normal form)
  - 4NF (Forth normal form)
  - 5NF (Fifth normal form)

As we move from 1NF to 5NF **number of tables** and **complexity increases** but **redundancy decreases**.

1NF (First Normal Form)

- Conditions for 1NF

Each **cells of a table should contain a single value**.

- A relation R is in first normal form (1NF) if and only if it **does not contain any composite attribute or multi-valued attributes or their combinations**.

OR

- A relation R is in first normal form (1NF) if and only if **all underlying domains contain atomic values only**.

1NF (First Normal Form) [Example - Composite attribute]

Customer

CID	Name	Address
C01	Raju	Jamnagar Road, Rajkot
C02	Mitesh	Nehru Road, Jamnagar
C03	Jay	C.G Road, Ahmedabad

- In customer relation **address is composite attribute** which is further divided into sub-attributes as "Road" and "City".
- So customer relation is not in 1NF.

- **Problem**: It is **difficult to retrieve the list of customers living in 'Jamnagar' city** from customer table.
- The reason is that **address attribute is composite attribute** which **contains road name as well as city name in single cell**.
- It is possible that **city name word is also there in road name**.
- In our example, 'Jamnagar' word occurs in both records, in first record it is a part of road name and in second one it is the name of city.

1NF (First Normal Form) [Example - Composite attribute]

Customer

CID	Name	Address
C01	Raju	Jamnagar Road, Rajkot
C02	Mitesh	Nehru Road, Jamnagar
C03	Jay	C.G Road, Ahmedabad

→

Customer

CID	Name	Road	City
C01	Raju	Jamnagar Road	Rajkot
C02	Mitesh	Nehru Road	Jamnagar
C03	Jay	C.G Road	Ahmedabad

- **Solution**: **Divide composite attributes** into **number of sub-attributes** and insert value in proper sub-attribute.

Exercise Convert below relation into 1NF (First Normal Form)

Person

PID	Full_Name	City
P01	Raj Ronak Desai	Rajkot

1NF (First Normal Form) [Example - Multivalued attribute]

Student

Rno	Name	FailedinSubjects
101	Raju	DS, DBMs
102	Mitesh	DBMS, DS
103	Jay	DS, DBMS, DE
104	Jeet	DBMS, DE, DS
105	Harsh	DE, DBMS, DS
106	Neel	DE, DBMS

- In student relation **FailedinSubjects attribute is a multi-valued attribute** which can store more than one values.
- So above relation is not in 1NF.

- **Problem**: It is difficult to retrieve the **list of students failed in 'DBMS' as well as 'DS' but not in other subjects** from student table.
- The reason is that FailedinSubjects attribute is multi-valued attribute so it contains more than one value.

1NF (First Normal Form) [Example - Multivalued attribute]

Student

Rno	Name	FailedinSubjects
101	Raju	DS, DBMs
102	Mitesh	DBMS, DS
103	Jay	DS, DBMS, DE
104	Jeet	DBMS, DE, DS
105	Harsh	DE, DBMS, DS
106	Neel	DE, DBMS

→

Student

Rno	Name
101	Raju
102	Mitesh
103	Jay
104	Jeet
105	Harsh
106	Neel

Result

RID	Rno	Subject
1	101	DS
2	101	DBMS
3	102	DBMS
4	102	DS
5	103	DS
…	…	…

- **Solution**: Split the table into two tables in such as way that
  - the **first table contains all attributes except multi-valued attribute** with same primary key and
  - **second table contains multi-valued attribute** and **place a primary key** in it.
  - **insert the primary key of first table in the second table as a foreign key**.

Normal forms

2NF (Second Normal Form)

2NF (Second Normal Form)

- Conditions for 2NF

It is **in 1NF** and each **table should contain a single primary key**.

- A relation R is in second normal form (2NF)
  - if and only if it is in **1NF** and
  - **every non-primary key attribute is fully dependent on the primary key**

OR

- A relation R is in second normal form (2NF)
  - if and only if it is in **1NF** and
  - **no any non-primary key attribute is partially dependent on the primary key**

2NF (Second Normal Form) [Example]

Customer

CID	ANO	AccessDate	Balance	BranchName
C01	A01	01-01-2017	50000	Rajkot
C02	A01	01-03-2017	50000	Rajkot
C01	A02	01-05-2017	25000	Surat
C03	A02	01-07-2017	25000	Surat

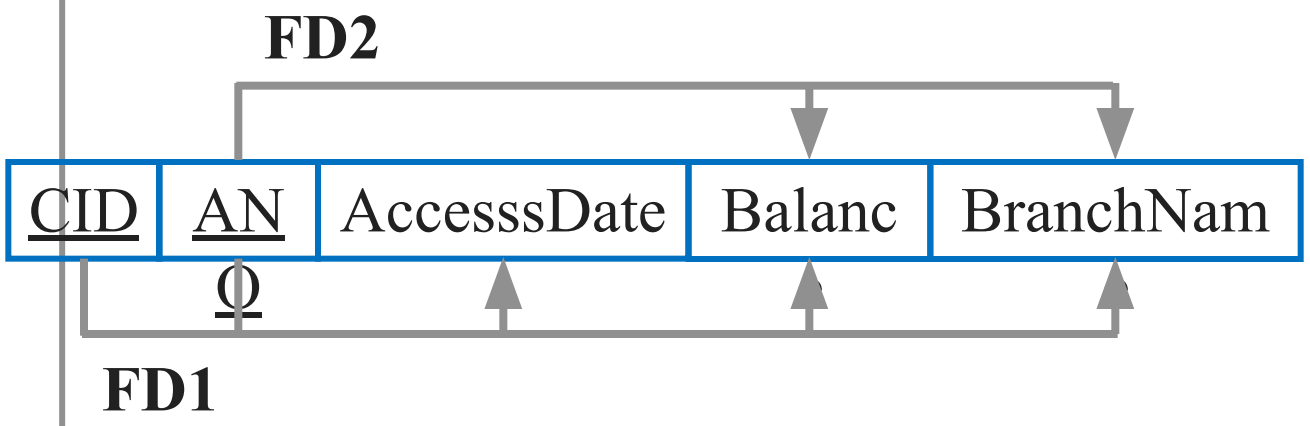

- **FD1**: {CID, ANO} → {AccesssDate, Balance, BranchName}
- **FD2**: ANO → {Balance, BranchName}
- **Balance and BranchName are partial dependent on primary key (CID + ANO)**. So customer relation is not in 2NF.

2NF (Second Normal Form) [Example]

Customer

CID	ANO	AccessDate	Balance	BranchName
C01	A01	01-01-2017	50000	Rajkot
C02	A01	01-03-2017	50000	Rajkot
C01	A02	01-05-2017	25000	Surat
C03	A02	01-07-2017	25000	Surat

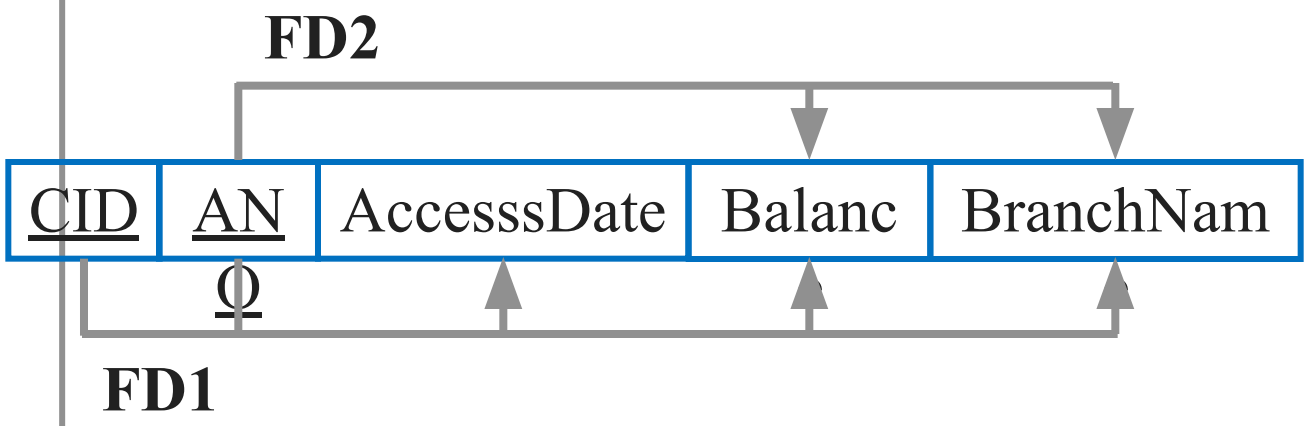

- **Problem:** For example, in case of a joint account multiple (more than one) customers have common (one) accounts.
- If an account **'A01' is operated jointly by two customers** says **'C01' and 'C02'** then **data** values for attributes **Balance and BranchName** will be **duplicated in two different tuples** of customers 'C01' and 'C02'.

2NF (Second Normal Form) [Example]

Customer

CID	ANO	AccessDate	Balance	BranchName
C01	A01	01-01-2017	50000	Rajkot
C02	A01	01-03-2017	50000	Rajkot
C01	A02	01-05-2017	25000	Surat
C03	A02	01-07-2017	25000	Surat

Table-1

ANO	Balance	BranchName
A01	50000	Rajkot
A02	25000	Surat

Table-2

CID	ANO	AccessDate
C01	A01	01-01-2017
C02	A01	01-03-2017
C01	A02	01-05-2017
C03	A02	01-07-2017

- **Solution: Decompose relation** in such a way that **resultant relations do not have any partial FD**.
  - **Remove partial dependent attributes** from the relation that violets 2NF.
  - **Place them in separate relation** along with the **prime attribute on which they are fully dependent**.
  - The **primary key of new relation** will be the **attribute on which it is fully dependent**.
  - **Keep other attributes same** as in that table with the **same primary key**.

Normal forms

3NF (Third Normal Form)

3NF (Third Normal Form)

- Conditions for 3NF

It is in 2NF and there is no transitive dependency.

(Transitive dependency???) A → B & B → C then A → C

- A relation R is in third normal form (3NF)
  - if and only if it is in **2NF** and
  - **every non-key attribute is non-transitively dependent on the primary key**

OR

- A relation R is in third normal form (3NF)
  - if and only if it is in **2NF** and
  - **no any non-key attribute is transitively dependent on the primary key**

3NF (Third Normal Form) [Example]

Customer

ANO	Balance	BranchName	BranchAddress
A01	50000	Rajkot	Kalawad road
A02	40000	Rajkot	Kalawad Road
A03	35000	Surat	C.G Road
A04	25000	Surat	C.G Road

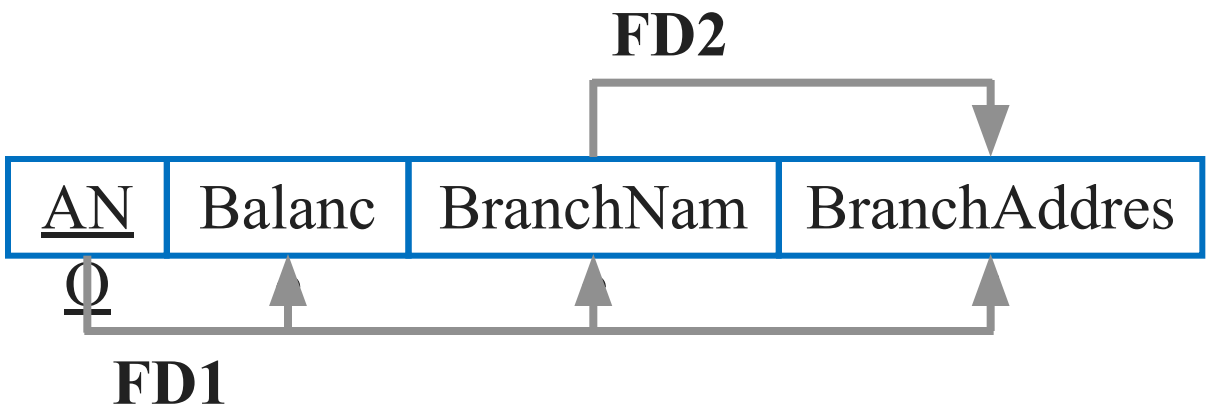

- **FD1**: ANO → {Balance, BranchName, BranchAddress}
- **FD2**: BranchName → BranchAddress
- So AccountNO → BranchAddress (Using Transitivity rule)
- **BranchAddress is transitive depend on primary key (ANO)**. So customer relation is not in 3NF.

3NF (Third Normal Form) [Example]

Customer

ANO	Balance	BranchName	BranchAddress
A01	50000	Rajkot	Kalawad road
A02	40000	Rajkot	Kalawad Road
A03	35000	Surat	C.G Road
A04	25000	Surat	C.G Road

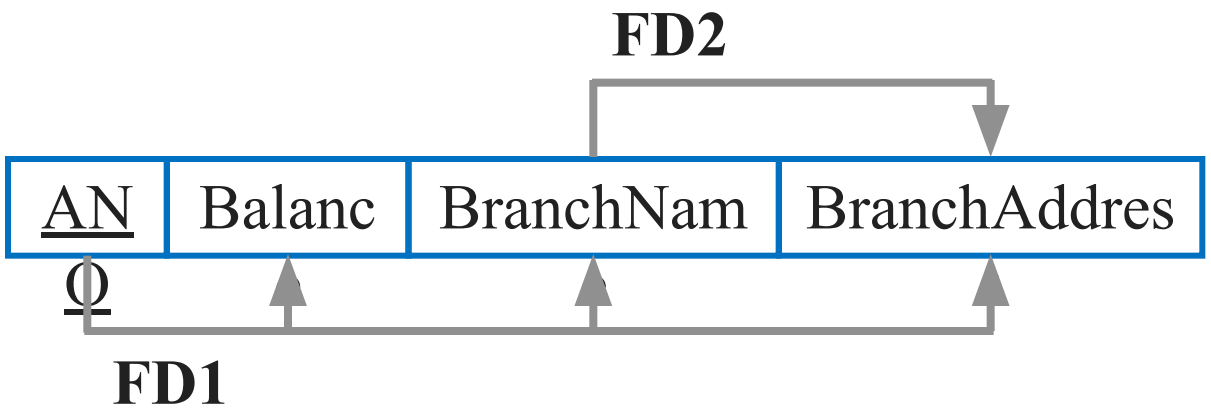

- **Problem:** In this relation, **branch address will be stored repeatedly** for each account of the same branch which **occupies more space**.

3NF (Third Normal Form) [Example]

Customer

ANO	Balance	BranchName	BranchAddress
A01	50000	Rajkot	Kalawad road
A02	40000	Rajkot	Kalawad Road
A03	35000	Surat	C.G Road
A04	25000	Surat	C.G Road

Table-1

BranchName	BranchAddress
Rajkot	Kalawad road
Surat	C.G Road

Table-2

ANO	Balance	BranchName
A01	50000	Rajkot
A02	40000	Rajkot
A03	35000	Surat
A04	25000	Surat

- **Solution: Decompose relation in** such a way that **resultant relations do not have any transitive FD.**
  - **Remove transitive dependent attributes** from the relation that violets 3NF.
  - **Place them in a new relation along** with the **non-prime attributes due to which transitive dependency occurred**.
  - The **primary key of the new relation** will be **non-prime attributes due to which transitive dependency occurred**.
  - **Keep other attributes same as in the table** with **same primary key** and **add prime attributes of other relation into it as a foreign key**.

Normal forms

BCNF (Boyce-Codd Normal Form)

BCNF (Boyce-Codd Normal Form)

- Conditions for BCNF

BCNF is **based on the concept of a determinant**.

It is in **3NF** and **every determinant should be primary key**.

Primary Key

Determinant

Dependent

AccountNO → {Balance, Branch}

- A relation R is in Boyce-Codd normal form (BCNF)
  - if and only if it is in 3NF and
  - for every functional dependency X → Y, X should be the primary key of the table. **OR**
- A relation R is in Boyce-Codd normal form (BCNF)
  - if and only if it is in 3NF and
  - every prime key attribute is non-transitively dependent on the primary key **OR**
- A relation R is in Boyce-Codd normal form (BCNF)
  - if and only if it is in 3NF and
  - no any prime key attribute is transitively dependent on the primary key

BCNF (Boyce-Codd Normal Form) [Example]

Student

RNO	Subject	Faculty
101	DS	Patel
102	DBMS	Shah
103	DS	Jadeja
104	DBMS	Dave
105	DBMS	Shah
102	DS	Patel
101	DBMS	Dave
105	DS	Jadeja

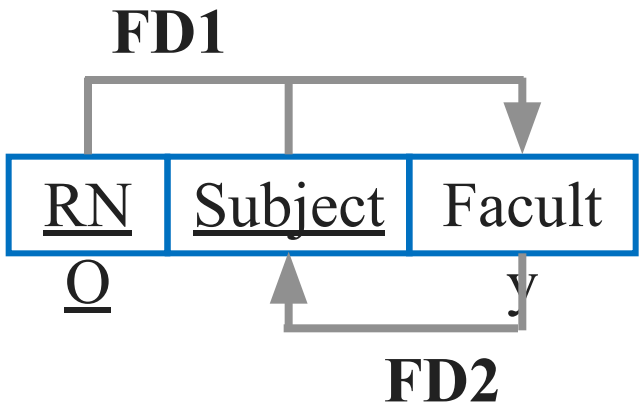

- **FD1**: RNO, Subject → Faculty
- **FD2**: Faculty → Subject
- So {RNO, Subject} → Subject (Transitivity rule)

In FD2, **determinant is Faculty which is not a primary key**. So student table is not in BCNF.

Problem: In this relation **one student can learn more than one subject with different faculty** then **records will be stored repeatedly for each student, language and faculty combination** which **occupies more space**.

- Here, one faculty teaches only one subject, but a subject may be taught by more than one faculty.
- A student can learn a subject from only one faculty.

BCNF (Boyce-Codd Normal Form) [Example]

Student

RNO	Subject	Faculty
101	DS	Patel
102	DBMS	Shah
103	DS	Jadeja
104	DBMS	Dave
105	DBMS	Shah
102	DS	Patel
101	DBMS	Dave
105	DS	Jadeja

Table-1

Faculty	Subject
Patel	DS
Shah	DBMS
Jadeja	DS
Dave	DBMS

Table-2

RNO	Faculty
101	Patel
102	Shah
103	Jadeja
104	Dave
105	Shah
102	Patel
101	Dave
105	Jadeja

- **Solution**: Decompose relation in such a way that resultant relations do not have any transitive FD.
  - Remove transitive dependent prime attribute from relation that violets BCNF.
  - Place them in separate new relation along with the non-prime attribute due to which transitive dependency occurred.
  - The primary key of new relation will be this non-prime attribute due to which transitive dependency occurred.
  - Keep other attributes same as in that table with same primary key and add a prime attribute of other relation into it as a foreign key.

Multivalued dependency (MVD)

- For a dependency X → Y, if **for a single value of X, multiple values of Y exists**, then the **table may have multi-valued dependency**.

Student

RNO	Subject	Faculty
101	DS	Patel
101	DBMS	Patel
101	DS	Shah
101	DBMS	Shah

- Multivalued dependency (MVD) is denoted by **→→**
- Multivalued dependency (MVD) is represented as **X →→ Y**

Normal forms

4NF (Forth Normal Form)

4NF (Forth Normal Form)

- Conditions for 4NF
- A relation R is in fourth normal form (4NF)
  - if and only if it is in **BCNF** and
  - **has no multivalued dependencies**

Student

RNO	Subject	Faculty
101	DS	Patel
101	DBMS	Patel
101	DS	Shah
101	DBMS	Shah

→

Subject

RNO	Subject
101	DS
101	DBMS

Faculty

RNO	Faculty
101	Patel
101	Shah

- Above student table **has multivalued dependency**. So student table is **not in 4NF**.

Functional dependency & Multivalued dependency

- A table can have both functional dependency as well as multi-valued dependency together.
  - RNO → Address
  - RNO →→ Subject
  - RNO →→ Faculty

Student

RNO	Address	Subject	Faculty
101	C. G. Road, Rajkot	DS	Patel
101	C. G. Road, Rajkot	DBMS	Patel
101	C. G. Road, Rajkot	DS	Shah
101	C. G. Road, Rajkot	DBMS	Shah

Subject

RNO	Subject
101	DS
101	DBMS

Faculty

RNO	Faculty
101	Patel
101	Shah

Address

RNO	Address
101	C. G. Road, Rajkot

Normal forms

5NF (Fifth Normal Form)

5NF (Fifth Normal Form)

- Conditions for 5NF
- A relation R is in fifth normal form (5NF)
  - if and only if it is in **4NF** and
  - it **cannot have a lossless decomposition in to any number of smaller tables** (relations).

Student_Result

RID	RNO	Name	Subject	Result
1	101	Raj	DBMS	Pass
2	101	Raj	DS	Pass
3	101	Raj	DF	Pass
4	102	Meet	DBMS	Pass
5	102	Meet	DS	Fail
6	102	Meet	DF	Pass
7	103	Suresh	DBMS	Fail
8	103	Suresh	DS	Pass

Student_Result relation is **further decomposed** into sub-relations. So the above relation is **not in 5NF**.

5NF (Fifth Normal Form)

- Conditions for 5NF
- A relation R is in fifth normal form (5NF)
  - if and only if it is in **4NF** and
  - it **cannot have a lossless decomposition in to any number of smaller tables** (relations).

Student_Result

RID	RNO	Name	Subject	Result
1	101	Raj	DBMS	Pass
2	101	Raj	DS	Pass
3	101	Raj	DF	Pass
4	102	Meet	DBMS	Pass
5	102	Meet	DS	Fail
6	102	Meet	DF	Pass
7	103	Suresh	DBMS	Fail
8	103	Suresh	DS	Pass

Student

RNO	Name
101	Raj
102	Meet
103	Suresh

Subject

SID	Name
1	DBMS
2	DS
3	DF

Result

RID	RNO	SID	Result
1	101	1	Pass
2	101	2	Pass
3	101	3	Pass
4	102	1	Pass
5	102	2	Fail
6	102	3	Pass
7	103	1	Fail
8	103	2	Pass

None of the above relations can be further decomposed into sub-relations. So the above database is in 5NF.

How to find key?

- Conditions to find key
  - The attribute is a **part of key**, if it **does not occur on any side of FD**
  - The attribute is a **part of key**, if it **occurs on the left-hand side of an FD**, but **never occurs on the right-hand side**
  - The attribute is **not a part of key**, if it **occurs on the right-hand side of an FD**, but **never occurs on the left-hand side**
  - The attribute **may be a part of key or not**, if it **occurs on the both side of an FD**

How to find key? [Example]

- Let a relation R with attributes ABCD with FDs C → A, B → C. Find keys for relation R.
  - attribute **not occur on any side** of FDs **(D)** √
  - attribute **occurs on only left-hand side** of an FDs **(B)** √
  - attribute **occurs on only right-hand side** of an FDs **(A)** X
  - attribute **occurs on both the sides** of an FDs **(C)** ?
- The **core is BD**.
- **B determines C** and **C determines A**, So using **transitivity rule B determines A** also.
- So **BD is a key**.

How to find key? [Exercise]

- Let a relation R with attributes ABCD with FDs C → D, C → A and B → C. Find keys for relation R.
  - The core is B. B determines C which determines A and D, so **B is a key**. Therefore B is the key.

- Let a relation R with attributes ABCD with FDs B → C, D → A. Find keys for relation R.
  - The core is BD. B determines C and D determines A, so **BD is a key**. Therefore BD is the key.

- Let a relation R with attributes ABCD with FDs A → B, BC → D and A → C. Find keys for relation R.
  - The core is A. A determines B and C which determine D, so **A is a key**. Therefore A is the key.

Find (candidate) key & check for normal forms [Example]

- Suppose you are given a relation R with four attributes ABCD. For each of the following sets of FDs, do the following: **F = (B → C, D → A)**
  - Identify the candidate key(s) for R.
  - Identify the best normal form that R satisfies (1NF, 2NF, 3NF or BCNF).

Candidate Key is **BD**

Relation R is in **1NF but not 2NF**. In above FDs, **there is a partial dependency**

(As per FD B → C, **C depends only on B** but **Key is BD** so **C is partial depends on key (BD)**)

(As per FD D → A, **A depends only on D** but **Key is BD** so **A is partial depends on key (BD)**)

Find (candidate) key & check for normal forms [Example]

- Suppose you are given a relation R with four attributes ABCD. For each of the following sets of FDs, do the following: **F = (C → D, C → A, B → C)**
  - Identify the candidate key(s) for R.
  - Identify the best normal form that R satisfies (1NF, 2NF, 3NF or BCNF).

Candidate Key is **B**

Relation R is in **2NF but not 3NF**. In above FDs, **there is a transitive dependency**

(As per FDs **B → C & C → D then B → D** so **D is transitive depends on key (B)**)

(As per FDs **B → C & C → A then B → A** so **A is transitive depends on key (B)**)

Find (candidate) key & check for normal forms [Example]

- Suppose you are given a relation R with four attributes ABCD. For each of the following sets of FDs, do the following: **F = (A → B, BC → D, A → C)**
  - Identify the candidate key(s) for R.
  - Identify the best normal form that R satisfies (1NF, 2NF, 3NF or BCNF).

Candidate Key is **A**

Relation R is in **2NF but not 3NF**. In above FDs, **there is a transitive dependency**

(As per FDs **A → B & A → C then A → BC** using union rule) and

(As per FDs **A → BC & BC → D then A → D** so **D is transitive depends on key (A)**)

Find (candidate) key & check for normal forms [Example]

- Suppose you are given a relation R with four attributes ABCD. For each of the following sets of FDs, do the following: **F = (ABC → D, D → A)**
  - Identify the candidate key(s) for R.
  - Identify the best normal form that R satisfies (1NF, 2NF, 3NF or BCNF).

Candidate Key are **ABC & BCD**

Relation R is in **3NF but not BCNF**.

In the above FDs, both FDs have **prime attribute (D and A) in dependent (right) side**.

How to normalize database?

- A software contract and consultancy firm maintains details of all the various projects in which its employees are currently involved. These details comprise: Employee Number, Employee Name, Date of Birth, Department Code, Department Name, Project Code, Project Description, Project Supervisor.
- Assume the following:
  - Each employee number is unique.
  - Each department has a single department code.
  - Each project has a single code and supervisor.
  - Each employee may work on one or more projects.
  - Employee names need not necessarily be unique.
  - Project Code, Project Description and Project Supervisor are repeating fields.
  - Normalize this data to Third Normal Form.

How to normalize database?

- A software contract and consultancy firm maintains details of all the various projects in which its employees are currently involved. These details comprise: Employee Number, Employee Name, Date of Birth, Department Code, Department Name, Project Code, Project Description, Project Supervisor.

UNF

Employee Number	Employee Name	Date of Birth	Department Code	Department Name	Project Code	Project Description	Project Supervisor
1	Raj	1-1-85	1	CE	1	IOT	Patel
2	Meet	4-4-86	2	EC	2	PHP	Shah
3	Suresh	2-2-85	1	CE	1	IOT	Patel
1	Raj	1-1-85	1	CE	2	PHP	Shah

How to normalize database?

UNF

Employee Number	Employee Name	Date of Birth	Department Code	Department Name	Project Code	Project Description	Project Supervisor
1	Raj	1-1-85	1	CE	1	IOT	Patel
2	Meet	4-4-86	2	EC	2	PHP	Shah
3	Suresh	2-2-85	1	CE	1	IOT	Patel
1	Raj	1-1-85	1	CE	2	PHP	Shah

1NF

Employee Number	Employee Name	Date of Birth	Department Code	Department Name
1	Raj	1-1-85	1	CE
2	Meet	4-4-86	2	EC
3	Suresh	2-2-85	1	CE

Employee Number	Project Code	Project Description	Project Supervisor
1	1	IOT	Patel
2	2	PHP	Shah
3	1	IOT	Patel
1	2	PHP	Shah

How to normalize database?

1NF

Employee Number	**Employee Name**	**Date of Birth**	**Department Code**	**Department Name**
1	Raj	1-1-85	1	CE
2	Meet	4-4-86	2	EC
3	Suresh	2-2-85	1	CE

Employee Number	**Project Code**	**Project Description**	**Project Supervisor**
1	1	IOT	Patel
2	2	PHP	Shah
3	1	IOT	Patel
1	2	PHP	Shah

2NF

Employee Number	**Employee Name**	**Date of Birth**	**Department Code**	**Department Name**
1	Raj	1-1-85	1	CE
2	Meet	4-4-86	2	EC
3	Suresh	2-2-85	1	CE

Project Code	**Project Description**	**Project Supervisor**
1	IOT	Patel
2	PHP	Shah

Employee Number	**Project Code**
1	1
2	2
3	1
1	2

How to normalize database?

3NF

Employee Number	**Employee Name**	**Date of Birth**	**Department Code**
1	Raj	1-1-85	1
2	Meet	4-4-86	2
3	Suresh	2-2-85	1

Department Code	**Department Name**
1	CE
2	EC

Project Code	**Project Description**	**Project Supervisor**
1	IOT	Patel
2	PHP	Shah

Employee Number	**Project Code**
1	1
2	2
3	1
1	2

Questions

1. What is meant by normalization? Write its need. List and discuss various normalization forms.
2. Consider schema EMPLOYEE(E-ID,E-NAME,E-CITY,E-STATE) and

   FD = {E-ID → E-NAME, E-ID → E-CITY, E-ID → E-STATE, E-CITY → E-STATE}

   - Find attribute closure for: $(\text{E-ID})^+$
3. Compute the closure of the following set F of functional dependencies for relation schema R(A, B, C, D, E).

   F = { A → BC, CD → E, B → D, E → A}

   3. List the candidate keys for R.
3. Consider schema R = (A, B, C, G, H, I) and the set F of functional dependencies {A → B, A → C, CG → H, CG → I, B → H}. (Use F^+)
   - Prove that AG → I Holds.

Questions

5. In the BCNF decomposition algorithm, suppose you use a functional dependency $\alpha \rightarrow \beta$ to decompose a relation schema r (α, β, γ) into r1 (α, β) and r2 (α, γ).
   - What primary and foreign-key constraint do you expect to hold on the decomposed relations?
   - Give an example of an inconsistency that can arise due to an erroneous update, if the foreign-key constraint were not enforced on the decomposed relations above.
   - When a relation is decomposed into 3NF, what primary and foreign key dependencies would you expect will hold on the decomposed schema?
6. A college maintains details of its lecturers' subject area skills. These details comprise: Lecturer Number, Lecturer Name, Lecturer Grade, Department Code, Department Name, Subject Code, Subject Name, Subject Level. Assume that each lecturer may teach many subjects but may not belong to more than one department. Subject Code, Subject Name and Subject Level are repeating fields. Normalize this data to Third Normal Form.