Microprocessors are programmable chips that serve as the CPU for computer systems, while microcomputers are complete, small-scale computer systems based on a microprocessor. Their evolution has been driven by the **stored program concept**, enabling general-purpose computing.

Module 1

Introduction to Microprocessors and Microcomputers Architecture

- **Microprocessor (MPU):** A single integrated circuit (IC) that contains the Central Processing Unit (CPU) functions, including the Arithmetic Logic Unit (ALU), control unit (CU), and registers. It is the "brain" of the system, capable of performing calculations and making decisions based on instructions.
    - Microprocessors: General-purpose microprocessor :

      CPU for Computers • No RAM, ROM, I/O on CPU chip itself

      Example：Intel's x86, Motorola's 680x0

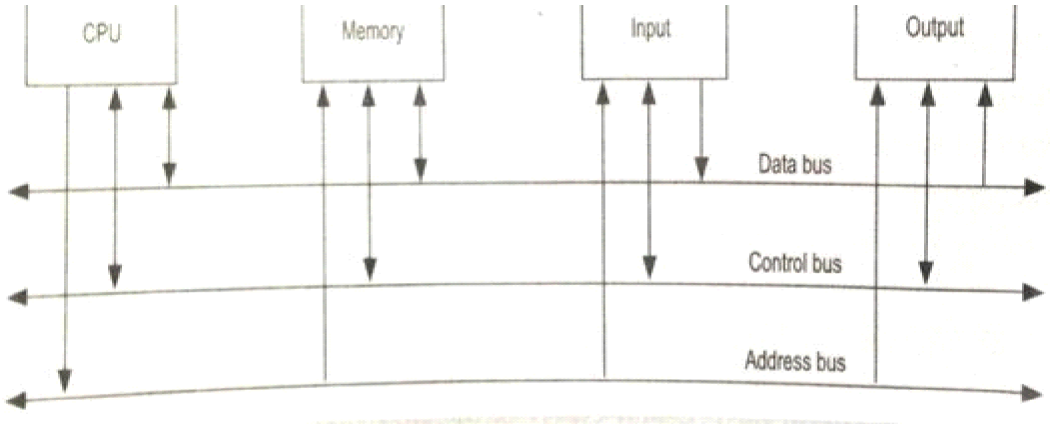

Microcontroller :

A smaller computer • On-chip RAM, ROM, I/O ports...

Example：Motorola's 6811, Intel's 8051, Zilog's Z8 and PIC 16X

- **Microcomputer:** A complete system built around a microprocessor as its CPU. It also includes essential peripherals like memory (RAM and ROM), input devices (e.g., keyboard), and output devices (e.g., screen, printer), all connected via a system bus (address, data, and control buses).

Evolution of Intel Microprocessors (up to 8086/88)

The evolution of Intel microprocessors demonstrates a progression in processing power, data bus width, and memory addressing capability.

- **Intel 4004 (1971):** The world's first commercially available microprocessor. It was a 4-bit processor designed for calculators, capable of basic arithmetic and logic operations.
- **Intel 8008 (1973):** The first 8-bit microprocessor, which could handle 8-bit data words.
- **Intel 8080 (1974):** An improved 8-bit processor widely used in early personal computers.
- **Intel 8085 (1977):** An enhanced version of the 8080. It was an 8-bit processor with a 16-bit address bus (64 KB memory capacity) and integrated features like a clock generator on the chip, reducing external hardware needs.
- **Intel 8086 (1978):** A major leap forward as the first 16-bit microprocessor with a 16-bit data bus and a 20-bit address bus, allowing access to 1 MB of memory. It introduced the segmented memory architecture and formed the basis of the x86 architecture used today.
- **Intel 8088 (1979):** Architecturally identical to the 8086 internally (16-bit registers), but used a cost-effective 8-bit external data bus to be compatible with cheaper, existing 8-bit peripheral chips. The 8088 was famously used in the original IBM PC, leading to its widespread adoption.

Stored Program Concept

The stored program concept, attributed to John von Neumann in the 1940s, is a fundamental principle of modern computer architecture.

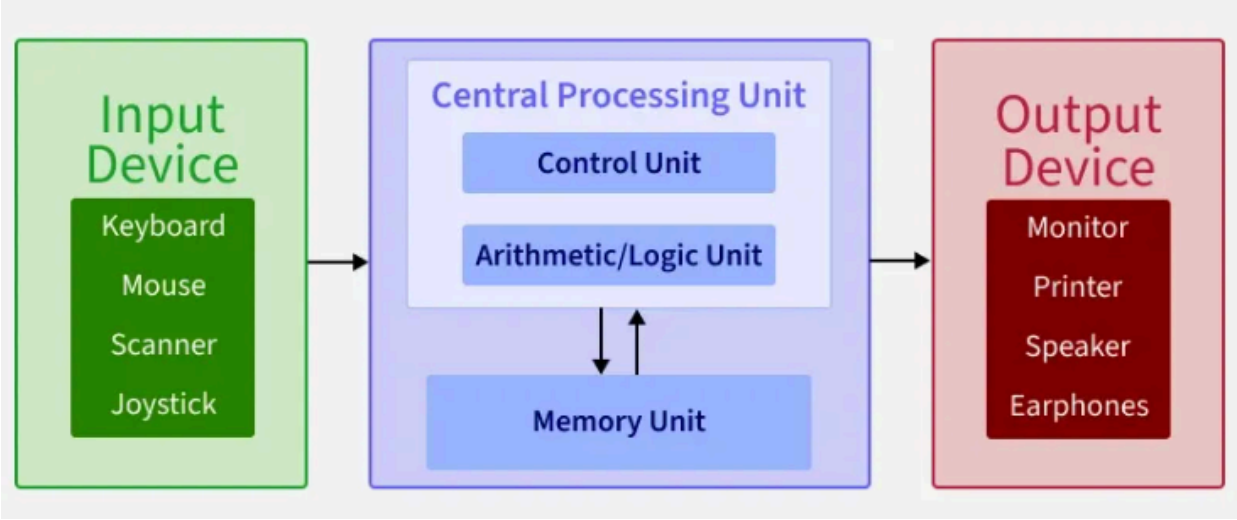

- **Definition:** The idea that both program instructions and the data they operate on are stored in the same computer memory (RAM).

  Von Neumann architecture is a computer design where instructions and data are stored in the same memory space.

This means the CPU fetches both instructions and data from the same memory, using the same pathways.

there have been 2 types of Computers:

- **Fixed Program Computers -** Their function is very specific, and they couldn't be reprogrammed, e.g., calculators.
- **Stored Program Computers -** These can be programmed to carry out many different tasks; applications are stored on them, hence the name.

Components of Von Neumann Architecture

The structure described in the figure outlines the basic components of a computer system, particularly focusing on the memory and processor. It is made up with three main components:

- CPU
- Memory
- I/O Devices

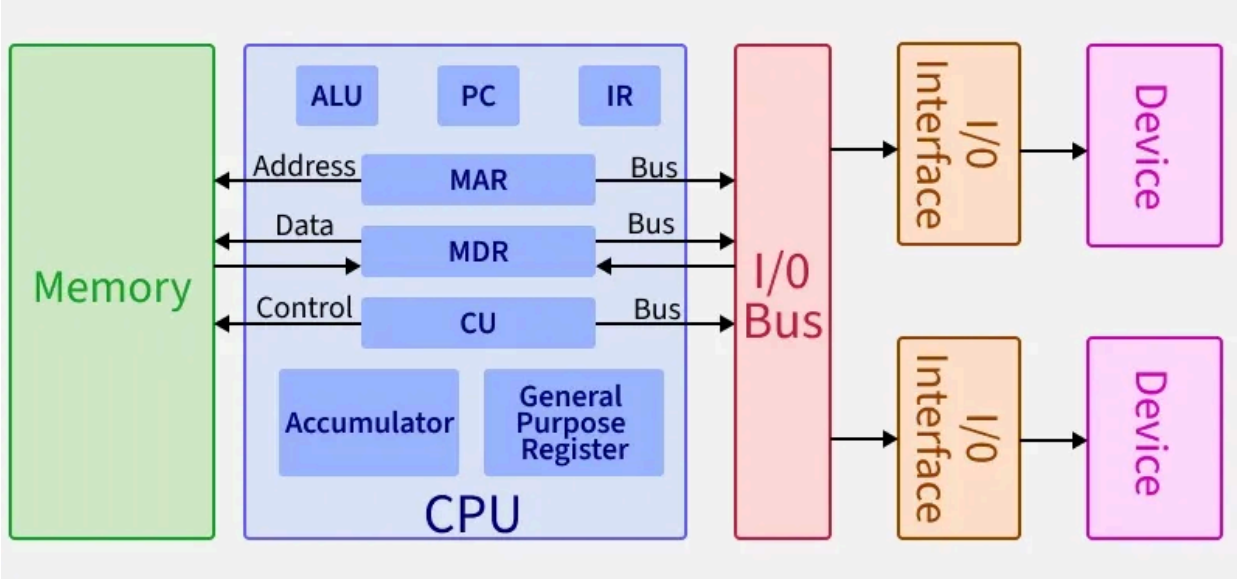

CPU (Central Processing Unit)
The central processing unit (CPU) is the main part of a computer that controls how it works. It is made up of the control unit, main memory, and the arithmetic logic unit (ALU). The CPU handles instructions from programs, processes data, stores information, and produces results. Without the CPU, a computer cannot perform tasks or run any applications.

CU (Control Unit)

The control unit manages how the processor works by sending control signals. It decides how data should move inside the computer, controls input and output operations, and fetches the instructions from memory for execution.

ALU (Arithmetic and Logic Unit)

The arithmetic and logic unit is the part of the CPU that handles the calculations and decision-making tasks. It performs arithmetic operations like addition and subtraction, logical operations such as comparisons, and tasks like shifting bits in data.

Registers

Registers are the fastest type of memory located inside the CPU. They temporarily store information that the processor is currently working on, making program execution and operations faster and more efficient. Register serve as the CPU's primary working memory.

- **PC (Program Counter)**: Keeps track of the address of the next instruction to be executed.
- **IR (Instruction Register)**: Holds the current instruction being executed.
- **MAR (Memory Address Register)**: Stores the address of the memory location being accessed.
- **MDR (Memory Data Register)**: Temporarily holds data being transferred to or from memory.
- **Accumulator**: A register that stores intermediate results of arithmetic and logic operations.
- **General Purpose Registers**: Used for temporary storage of data during processing.

Bus

The bus is a communication system that transfers data, addresses, and control signals between the CPU, memory, and I/O devices. In Von Neumann architecture, a single bus is shared for both data and instructions, which can create a bottleneck (known as the Von Neumann bottleneck).

I/O Bus

- **I/O Interface**: Connects the CPU and memory to input/output devices.
- **Device**: Refers to external hardware like keyboards, monitors, or storage devices.

Key Characteristics

1. **Single Memory for Data and Instructions**: Both data and program instructions are stored in the same memory.
2. **Shared Bus**: A single bus is used for transferring data, addresses, and control signals, which can limit performance.
3. **Sequential Execution**: Instructions are executed one at a time in a sequential manner.

Von Neumann bottleneck

Whatever we do to enhance performance, we cannot get away from the fact that instructions can only be done one at a time and can only be carried out sequentially. Both of these factors hold back the competence of the CPU. This is commonly referred to as the 'Von Neumann bottleneck'. We can provide a Von Neumann processor with more cache, more RAM, or faster components but if original gains are to be made in CPU performance then an influential inspection needs to take place of CPU configuration.

Significance:

- **Flexibility:** Allows the same hardware to perform a variety of tasks by simply loading a different program into memory, eliminating the need for physical re-wiring.
- **Automation:** Enables the CPU to fetch, decode, and execute instructions sequentially from memory without manual intervention, which is essential for complex operations.
- **Modifiability:** The program can be dynamically modified by the computer itself during execution, enabling advanced programming features like loops and jumps.

Applications of Microcomputers (Real-World Examples)

Microcomputers and microprocessors are ubiquitous, powering a vast array of modern electronic devices.

- **Drones:** Microcomputers on drones process real-time data from cameras and sensors, enabling enhanced navigation, obstacle avoidance, and autonomous decision-making. They use microprocessors for flight control systems and specialized digital signal processors (DSPs) for image and audio processing during surveillance or media applications.
- **Emergency Buttons:** These often use microcontrollers (which are microcomputers on a single chip) with built-in memory and I/O ports. When activated, the microcontroller runs a stored program to use communication modules (like GSM or GPS) to send an emergency message and location data to predefined contacts.
- **Field Terminals:** Portable, ruggedized computers used by field workers (e.g., in logistics, maintenance, or data collection). They rely on microprocessors to run specialized applications, process data inputs, display information, and communicate with central systems or networks.