ankit STATIONERY

# Index

| S. No. | Name of the Experiment | Page No. | Date of Experiment | Date of Submission | Remarks |
|---|---|---|---|---|---|
| 1. | To study and verify - | 1-2 | 30/09/20 | | |
| | (i) Kirchhoff's Current Law | | | | |
| | (ii) Kirchhoff's Voltage Law | | | | |
| 2. | To study and verify the | 3-4 | 7/10/20 | | |
| | Thevenin's Theorem. | | | | |
| 3. | To determine voltage, power | 5-6 | 21/10/20 | | |
| | and power factor, value of R, L | | | | |
| | and C in single phase AC | | | | |
| | Series Circuit. | | | | |
| 4. | To determine current, power | 7-8 | 11/11/20 | | |
| | and power factor, value of R, L | | | | |
| | and C in single phase AC | | | | |
| | Parallel Circuit. | | | | |
| 5. | To study DC machines and | 9-11 | 18/11/20 | | |
| | Transformer. | | | | |
| 6. | To study and determine | 12-14 | 25/11/20 | | |
| | experimentally for the single | | | | |
| | phase magnetic circuit. | | | | |
| 7. | To perform open and short circuit | 15-16 | 2/12/20 | | |
| | test. | | | | |
| 8. | To perform LCR series resonance | 17-18 | 09/12/20 | | |
| | and find the resonant frequency | | | | |
| 9. | To study the behaviour of | 19-20 | 16/12/20 | | |
| | magnetic core and plot the | | | | |
| | magnetising characteristics. | | | | |

ankit STATIONERY

# Index

| S. No. | Name of the Experiment | Page No. | Date of Experiment | Date of Submission | Remarks |
|---|---|---|---|---|---|
| 10. | To determine a) relationship between phase and line voltage and current, b) power and power factor by 2-wattmeter method. | 21-23 | 23/12/20 | | |

Date 30/09/20

Expt. No. 1 Page No. 1

OBJECTIVE: To study and experimentally verify -
(i) Kirchhoff's Voltage Law (ii) Kirchhoff's Current Law

APPARATUS: (1) KCL/KVL experimental kit (2) Voltmeter: 7.5V
(3) Ammeter: 75/150mA

THEORY: The two basic laws that give the voltage across, and current through an element (resistance, capacitance or inductance) arranged in network are known as Kirchhoff's Voltage Law and Kirchhoff's Current Law respectively and are stated as:-
(1) Kirchhoff's Voltage Law → algebraic sum of voltage drops in a closed mesh is zero.
(2) Kirchhoff's Current Law → algebraic sum of currents at a node is equal to zero.

PROCEDURE:
(i) Kirchhoff's Voltage Law
1. Take a mesh and mark the direction of flow of current through its branches.
2. Measure the voltage across each branch in the mesh and give the polarity sign (+ve or -ve).
3. Find the algebraic sum of voltages in the mesh.
4. Now verify this law theoretically by calculating voltage drops in each mesh.

(ii) Kirchhoff's Current Law
→ The current is always measured by connecting an ammeter in series

Teacher's Signature :

Date: 30/09/20

Expt. 1

OBJECTIVE: To study and verify (i) Kirchhoff's Voltage Law and (ii) Kirchhoff's Current Law.

CIRCUIT DIAGRAM:

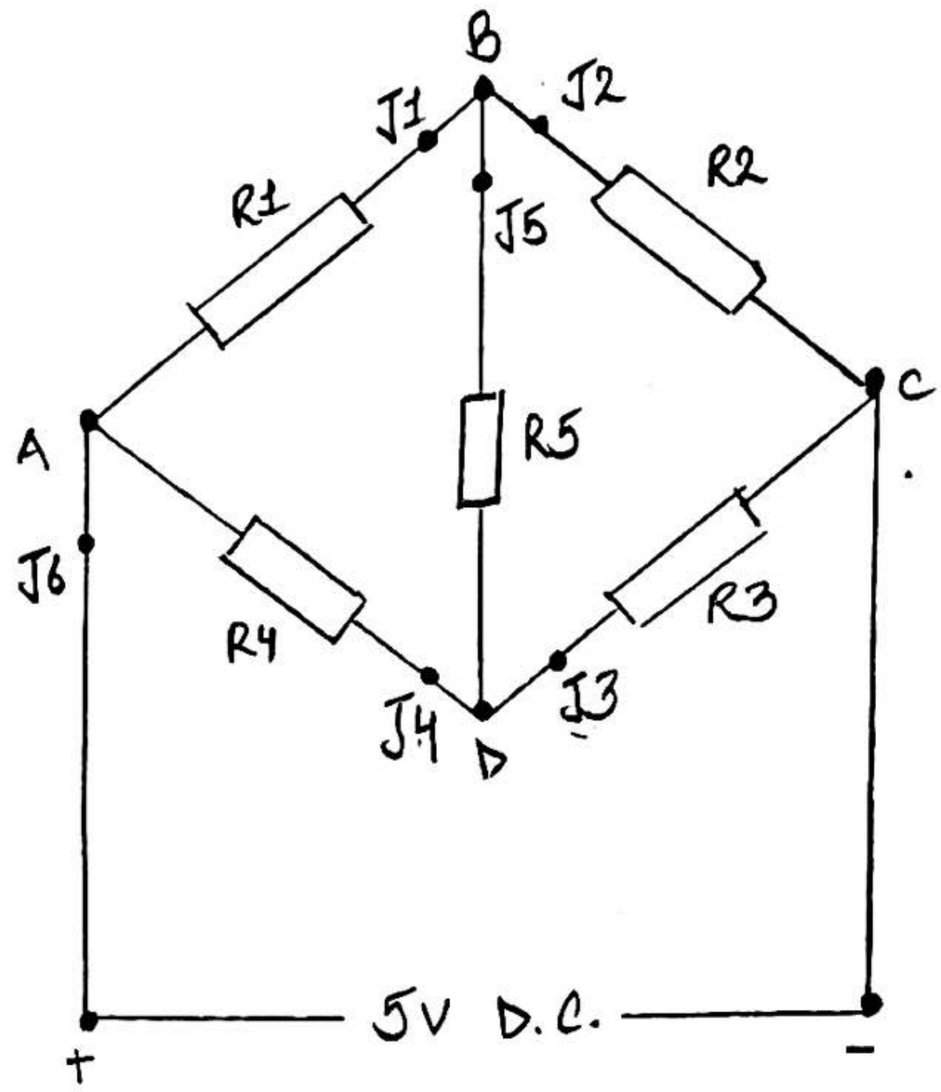


Fig. 1

OBSERVATION:

| S. No. | Mesh | Kirchhoff's Voltage Law (in V) | | | | Error |
|---|---|---|---|---|---|---|
| 1. | ABDA | $V_{AB}$ | $V_{BD}$ | $V_{DA}$ | $V_{AB}+V_{BD}+V_{DA}=0$ | 0 |
| | | 2.5 | 0.7 | -3.2 | $2.5+0.7-3.2=0$ | |
| 2. | BCDB | $V_{BC}$ | $V_{CD}$ | $V_{DB}$ | $V_{BC}+V_{CD}+V_{DB}=0$ | 0 |
| | | 3.2 | -2.5 | -0.7 | $3.2-2.5-0.7=0$ | |

Table 1. KVL

with the circuit. Thus, to facilitate this, the jack switch is provided in each branch which automatically breaks the circuit when plug is put into the jack switch and it connects ammeter in series with the branch.

1. Take a node /junction and mark the polarity of currents in branches.
2. Measure the value of incoming and outgoing currents of jack points of the branches.
3. Find the algebraic sum of currents at the junction.
4. Now verify this law theoretically by calculating current in each branch.

PRECAUTIONS:

1. Observe the polarity of voltmeter and millimeter.
2. Keep measuring meters in horizontal position (table mode).
3. Use millimeter with jack connector for measuring current in various branches.
4. Use an appropriate range of the instruments to avoid overshooting of scale.

| S. No. | Junction | Kirchhoff's Current Law (in mA) | | | | Error |
|---|---|---|---|---|---|---|
| 1. | A | $I_{J6}$ | $I_{J1}$ | $I_{J4}$ | $I_{J6} = I_{J1} + I_{J4}$ | 0 |
| | | 76 | 44 | 32 | $76 = 44 + 32$ | |
| 2. | B | $I_{J1}$ | $I_{J2}$ | $I_{J5}$ | $I_{J1} = I_{J2} + I_{J5}$ | 0 |
| | | 44 | 32 | 12 | $44 = 32 + 12$ | |

Table 2. KCL

OBJECTIVE: To study and verify the Thevenin's Theorem

APPARATUS: (1) Thevenin's Experimental Kit (2) Voltmeter : 7.5V
(3) Ammeter : 75/150 mA

THEORY: This circuit states that the current in any bilateral circuit element ($R_L$) in a network is the same as would be obtained if that circuit element ($R_L$) is supplied with a source voltage in series with an equivalent resistance $R_{th}$ being the open circuit voltage at the terminals from which $R_L$ has been removed and $R_{th}$ being the resistance that would be measured at these terminals after all sources have been replaced by their internal resistance respectively. According to this theorem, if resistance $R_L$ be connected between two terminals in a linear bilateral network, then resulting steady state current through resistor will be $V_{th}/(R_L+R_{th})$, where $V_{th}$ is the ~~proportional~~ potential difference between points A and B after removing $R_L$ such that for network shown in figure.

$$V_{th} = \frac{V \times R_2}{(R_1+R_2+r)}$$

And Thevenin's resistance measured between terminals AB (with source removed and replaced by its internal resistance if any, otherwise replace by short circuit) is given by:

$$R_{th} = \frac{R_2\,(R_1+r)}{(R_1+R_2+r)}$$

Now, external resistance $R_L$ is connected between terminals AB

Date : 7/10/20

Expt. 2

OBJECTIVE : To study and verify Thevenin's Theorem.

CIRCUIT DIAGRAM :

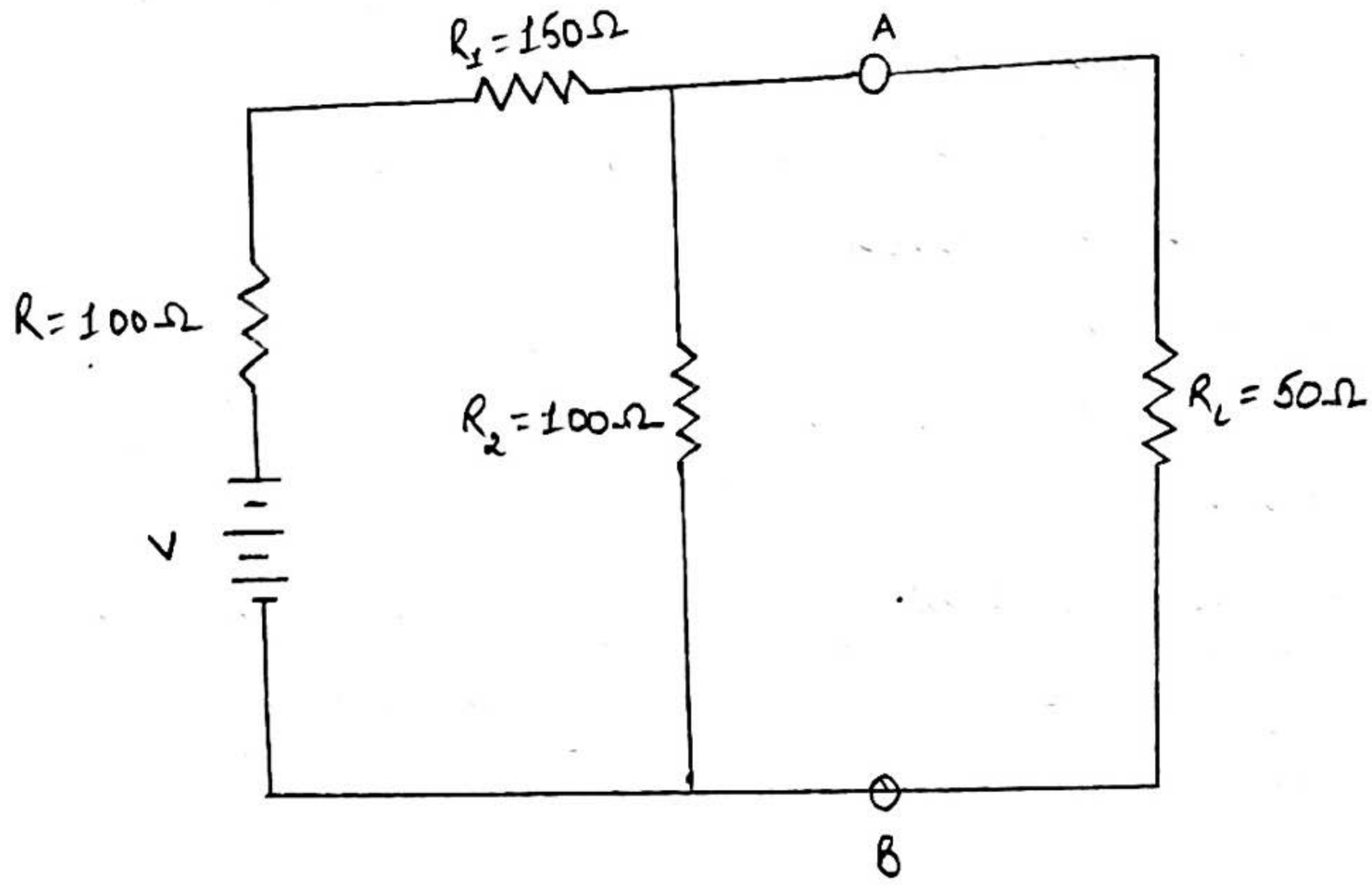


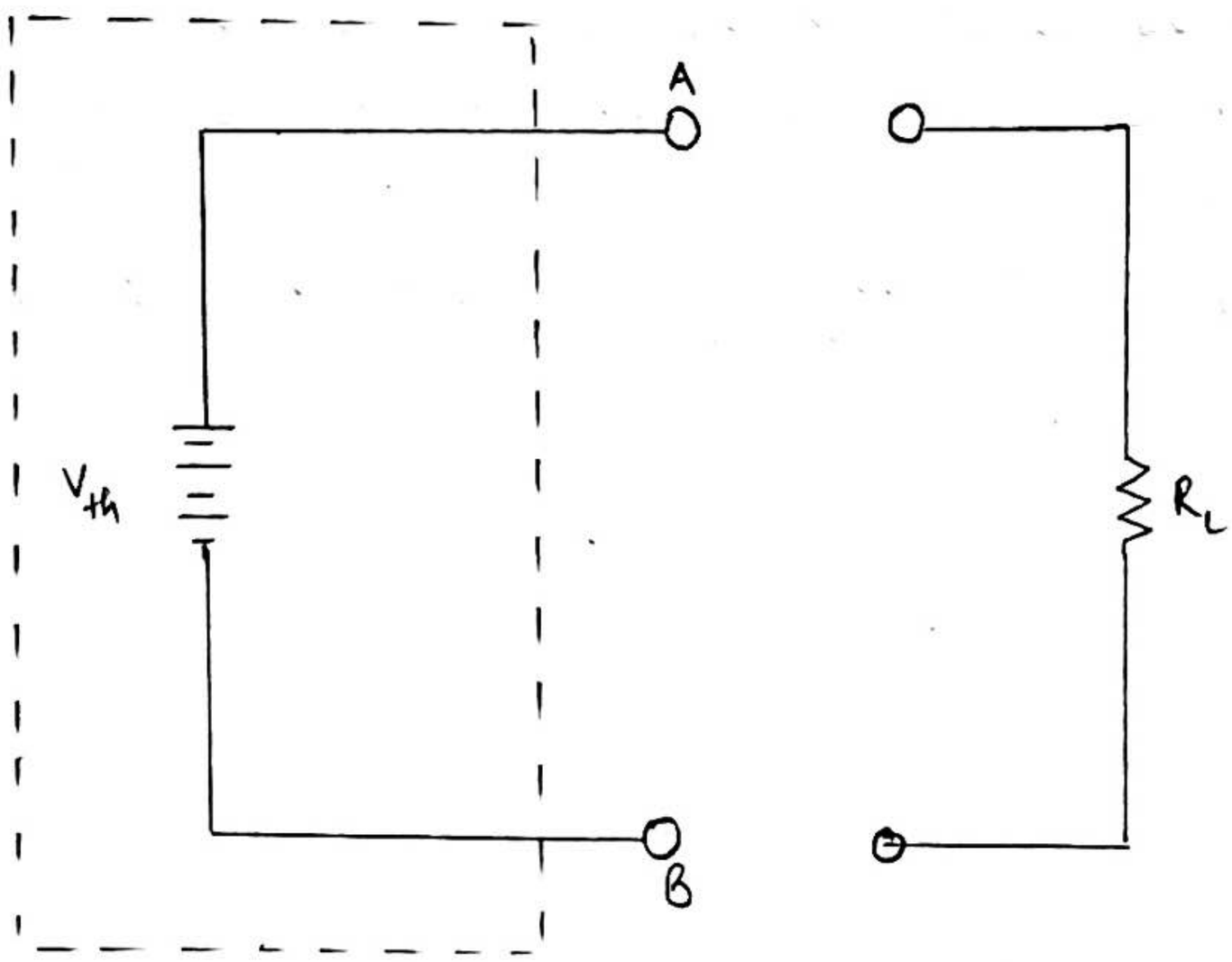


Fig. 1 Circuit Diagram

such that Thevenin's equivalent circuit for the network will be as shown in figure. Current through $R_L$ will be -

$$I = \frac{V_{th}}{(R_{th}+R_L)}$$

PROCEDURE : 1. Connect the circuit as shown in the circuit diagram.
2. To verify the theorem across AB terminals, measure current across AB by adding an ammeter.
3. Remove $R_L$ from the circuit and measure the open circuit voltage $V_{th}$ across the points AB by a DC voltmeter.
4. Measure the short circuit current $I_{sc}$ in AB by a DC ammeter.
5. Find the ratio of $V_{th}$ and $I_{sc}$ and draw Thevenin's equivalent and find the current in load branch.
6. Now verify the theorem across AB theoretically and draw its Thevenin's equivalent.

PRECAUTIONS :

1. Observe the polarity of DC voltmeter and DC ammeter.
2. Keep measuring meters in horizontal position (table mode).
3. Use an appropriate range of instruments to avoid overshooting of scale.

OBSERVATION:

| S. No. | Branch | $V_{th}$ | $I_{sc}$ | $R_{th} = \frac{V_{th}}{I_{sc}}$ | Current in Branch | Analytical Value | % Error |
|---|---|---|---|---|---|---|---|
| 1. | AB | 2.8V | 40.4mA | 69.3Ω | 23.7 mA | 23.47 mA | 0.97 |

OBJECTIVE : To determine experimentally ;

(1) Voltage distribution in a single phase AC series circuit.

(2) Power and power factor of the (a) circuit (b) choke coil.

(3) The value of the circuit elements R, L and C.

EQUIPMENTS : (1) Resistor (2) Choke coil (3) Capacitor (4) SPDT Key (5) Wattmeter 250V/1A (6) AC voltmeter 150V (7) AC ammeter 1A

THEORY : For a given AC series circuit, when energized from an AC source, same current flows through series connected resistance R, choke coil L and capacitor C.

The voltage drop across these elements is as follows :

(1) across resistance → $V_R = IR$

(2) across inductance → $V_L = IX_L = I(j\omega L)$

(3) across capacitor → $V_C = -jIX_C = I/(j\omega C)$

(4) the resistance of inductance $r_L$ can be measured by multimeter, so total circuit resistance $= R + r_L$

(5) total voltage across the circuit is $V_S = I[R + r_L + j(\omega L - 1/\omega C)]$

$= I[R + r_L + j(X_L - X_C)]$

$= I(R + r_L + jX) = IZ$

(6) power consumed in the choke coil $= P_L = I^2(r_L) = V_L I \cos\phi$

(7) power factor of the circuit, $\cos\phi = (R + r_L)/Z$

(8) power consumed in the circuit, $P_t = I^2(R + r_L) = V_S I \cos\phi$ (the extra $I^2 r_L$ is consumed by choke coil).

(9) power factor of the choke coil $= r_L / r_L^2 + X^2 = P_L / V_L I$

Date: 21/10/20

Expt. 3

OBJECTIVE: To determine experimentally:
(1) Voltage Distribution in a single phase AC series circuit.
(2) Power and power factor of a) circuit b) choke coil.
(3) The value of the circuit elements R, L and C.

EQUIPMENTS: Resistor, choke coil, capacitor, SPDT Key, Wattmeter 250V/1A, AC voltmeter 150 V, AC ammeter 1 A.

CIRCUIT DIAGRAM:

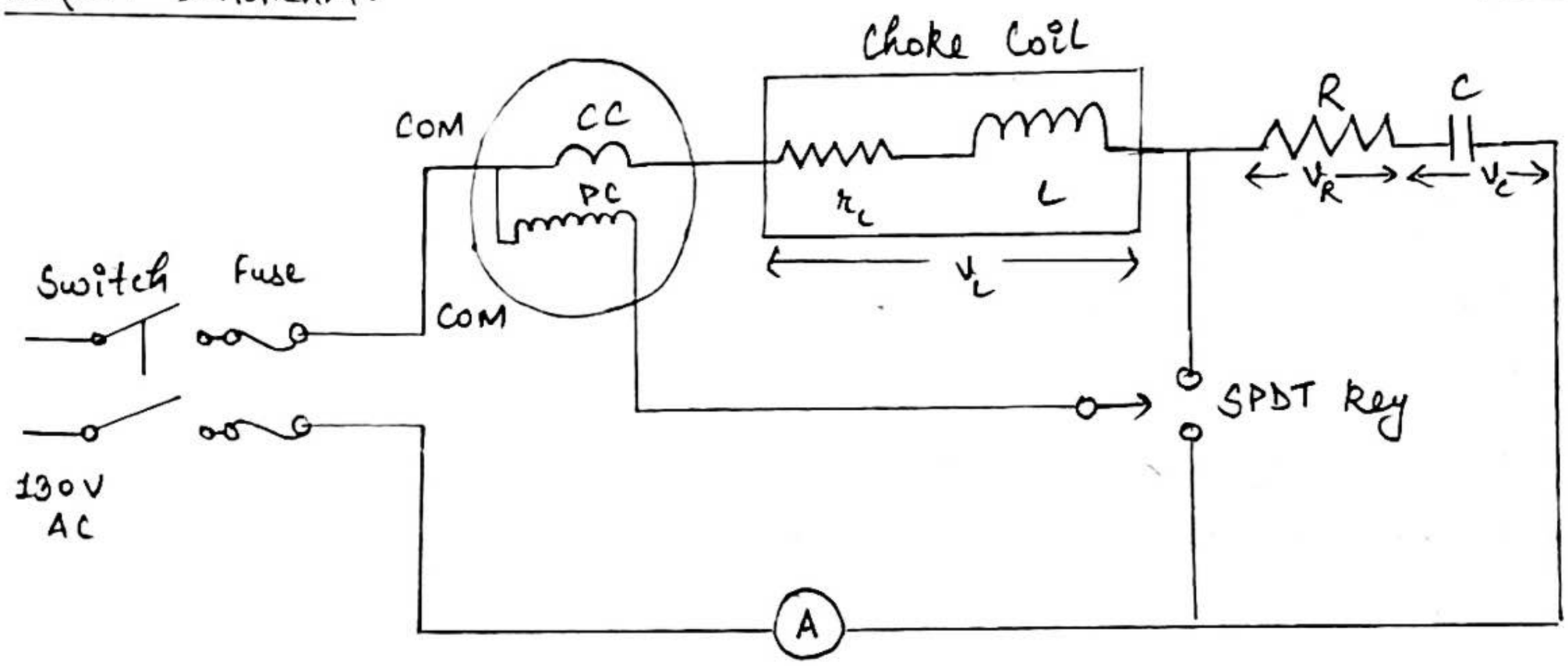


Fig. 1

OBSERVATION:

| Sr. No. | Applied Voltage | Circuit Current | Voltage drop across circuit elements | | | Power consumed (W) | |
|---|---|---|---|---|---|---|---|
| | $V_S$ | I | Resistance $V_R$ | Choke coil $V_L$ | Capacitor $V_C$ | Across choke coil, $P_L$ | Whole Circuit, $P_t$ |
| 1. | 130 V (single phase) | 0.56 A | 106 V | 40 V | 87 V | 2 div. 2×2 = 4W | 35 div. 35×2 = 70W |

$$\text{Multiplication factor of Wattmeter} = \frac{\text{Voltage range} \times \text{Current range} \times \text{Power factor of Wattmeter}}{\text{Max. scale deflection}}$$

$$= \frac{150V \times 1A \times 1}{75} = 2$$

PROCEDURE: 1. Connect the experimental set as shown in the circuit diagram.

2. Select AC 230V from the supply panel and switch on the input supply.
3. Measure voltage drop across each component with the help of voltmeter.
4. Measure current flowing in the circuit with the help of ammeter
5. Keep SPDT switch at position 1, wattmeter will give the power consumed ($P_1$) in the choke coil.
6. Shift SPDT switch to position 2, wattmeter will give the power consumed ($P_t$) by the total circuit.
7. Record the readings of the instruments carefully in the observation table.

PRECAUTIONS: 1. Always keep the measuring instruments in horizontal position.

2. Select appropriate range of the instruments i.e. the range of the instruments should always be more than the existing value of current or voltage in the circuit.

3. Do not touch the resistance as it might have been heated up.

POINTS TO REMEMBER:

1. Multiplication factor of wattmeter = Voltage range * Current range * Power factor of Wattmeter / Max scale deflection

2. Actual reading of wattmeter = Multiplication factor * reading of wattmeter

## CALCULATIONS:

$$R = \frac{V_R}{I} = \frac{106}{0.56} = 189.28\,\Omega$$

$$Z_L = \frac{V_L}{I} = \frac{40}{0.56} = 71.43\,\Omega$$

$$X_C = \frac{V_C}{I} = \frac{87}{0.56} = 155.35\,\Omega$$

$$P_L = I^2 r_L \Rightarrow r_L = \frac{4}{(0.56)^2} = 12.76\,\Omega$$

$$\therefore X_L = \sqrt{Z_L^2 - r_L^2} = 70.28\,\Omega$$

$$X_L = \omega L \Rightarrow L = \frac{X_L}{2\pi f} = \frac{70.28}{2 \times 3.14 \times 50} = 0.224\,H$$

$$X_C = \frac{1}{\omega C} \Rightarrow C = \frac{1}{2\pi f X_C} = \frac{1}{2 \times 3.14 \times 50 \times 155.35} = 20.5\,\mu F$$

$$P_T = I^2(R + r_L) = (0.56)^2(189.28 + 12.76) = 63.36\,W$$

$$Z = \sqrt{(R + r_L)^2 + (X_L - X_C)^2} = \sqrt{40820.16 + 7236.9} = 219.22\,\Omega$$

$$\cos\phi_T = \frac{(R + r_L)}{Z} = \frac{189.28 + 12.76}{219.22} = 0.9216$$

$$\cos\phi_L = \frac{r_L}{\sqrt{r_L^2 + (X_L - X_C)^2}} = \frac{12.76}{\sqrt{(12.76)^2 + (85.07)^2}} = 0.1482$$

## RESULT:

$R_T = R + r_L = 202.04\,\Omega$

$L = 0.224\,H$

$C = 20.5\,\mu F$

$P_L = 4\,W$

$P_T = 63.36\,W$

$\cos\phi_L = 0.1482$

$\cos\phi_T = 0.9216$

OBJECTIVE : To determine experimentally :-

1) Current distribution in a single phase AC parallel circuit.
2) Power and power factor of the circuit.
3) The value of circuit elements R, L and C.

EQUIPMENT : (1) Voltmeter : 150V AC (2) Ammeter : 3A AC
(3) Wattmeter : 250V, 3A (4) Resistor, choke coil and capacitor

THEORY : For a given AC parallel circuit, when energized from an AC source, same voltage drops across all parallel connected branches consisting of resistances $R_2$, choke coil L and capacitor C.
For a given AC, current I passing through R, L and C, the voltage drop across Resistance, $V_R = IR$, Pure Inductance, $V_L = I(j\omega L)$,
Pure Capacitance, $V_C = \frac{I}{j\omega C} = IX_C$.

Power dissipated in branch one (RL) for parallel circuit shown in figure.

1) $P_{RL} = I_1^2(R_1 + r) = V_S I_1 \cos\theta_1$, power dissipated in branch two (RC).
2) $P_{RC} = I_2^2 R_2 = V_S I_2 \cos\theta_2$, total power is $P_1 + P_2 = V_S I \cos\theta = P_t$,
Total current, $I = I_1 + I_2$ (phasor sum).
3) $\theta_1$, $\theta_2$ and $\theta$ are phase angles between supply voltage and current $I_1$, $I_2$ and I respectively. $R_1$, $R_2$ are the resistances of rheostats connected in branch 1, 2. $V_S$ is the supply voltage.
Power factor of parallel circuit, $\cos\theta = \frac{I_1\cos\theta_1 + I_2\cos\theta_2}{I} = \frac{P_t}{V_S I}$

$\cos\theta_1 = \frac{P_{RL}}{V_S I_1} = \frac{R_1 + r}{\sqrt{(R_1+r)^2 + X_L^2}}$, $\cos\theta_2 = \frac{P_{RC}}{V_S I_2} = \frac{R_2}{\sqrt{R_2^2 + X_C^2}}$

Date: 11/11/20

Expt. 4

OBJECTIVE: To determine experimentally:-
1) Current distribution in a single phase AC parallel circuit.
2) Power and power factor of the circuit.
3) The value of circuit elements R, L and C.

EQUIPMENT: Voltmeter: 150V AC, Ammeter: 3A AC, Wattmeter: 250V, 3A, Resistor, Choke coil and Capacitor.

CIRCUIT DIAGRAM:

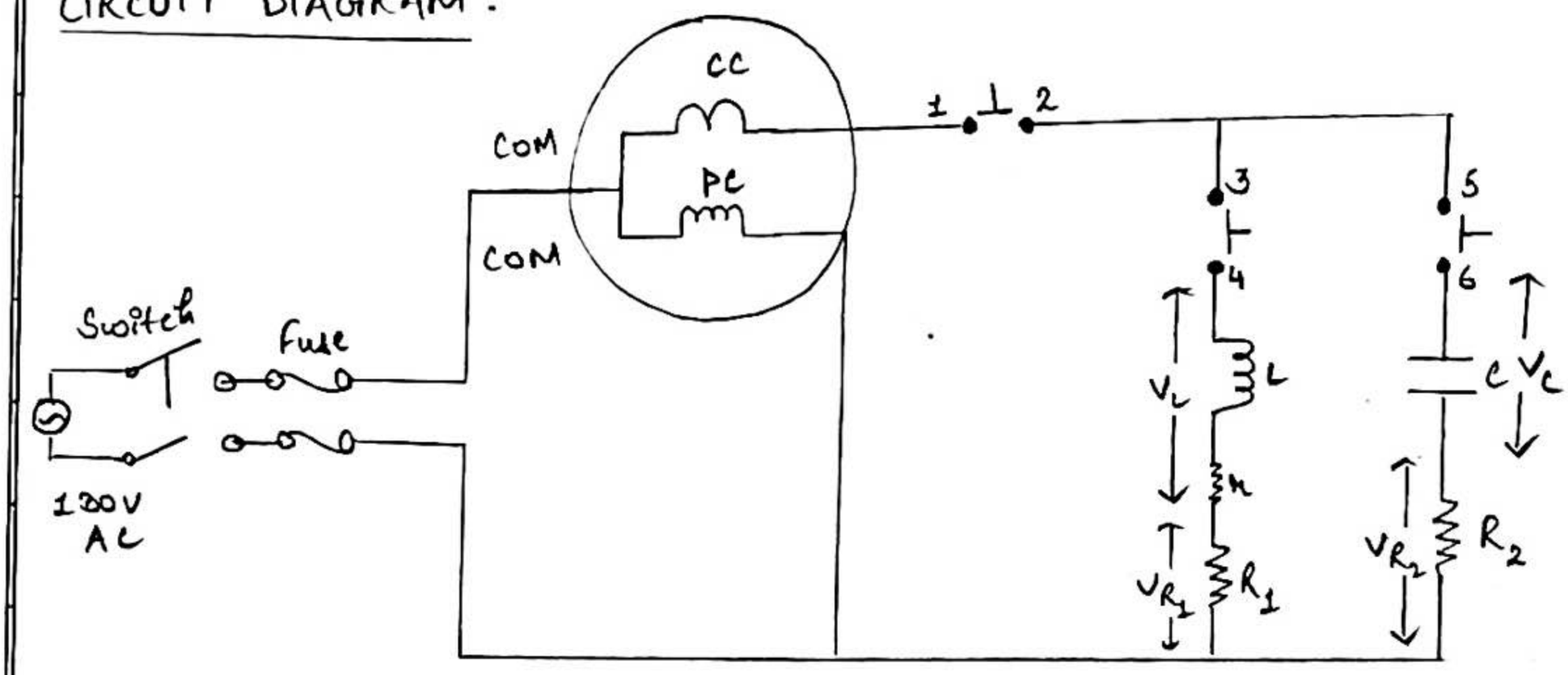


Fig. 1

OBSERVATION:

| Case | Supply ($V_s$) | Voltage across elements | | | | Current through switch | | | Power consumed | | |
|---|---|---|---|---|---|---|---|---|---|---|---|
| | | $V_{R_1}$ | $V_{R_2}$ | $V_L$ | $V_C$ | 1-2 I | 3-4 $I_1$ | 5-6 $I_2$ | $W_1$ $P_{RL}$ | $W_2$ $P_{RC}$ | W $P_t$ |
| 1. | 230V | 110V | 98V | 42V | 72V | 0.95A | 0.56A | 0.5A | 16×4 = 64W | 12×4 = 48W | 28×4 = 112W |

Multiplication factor of Wattmeter = $\frac{\text{Voltage range} \times \text{Current range} \times \text{power factor of wattmeter}}{\text{Max. scale deflection}}$

$= \frac{250 \times 2.5 \times 1}{156.25}$

$= 4$

Voltage across resistor $R_1$, $V_{R_1} = I_1 R_1$; Voltage across resistor $R_2$, $V_{R_2} = I_2 R_2$
Voltage across inductor L, $V_L = I_1(r + jX_L)$; Voltage across capacitor C, $V_C = I_2(-jX_C)$

PROCEDURE: 1. Connect the experiment set up as shown in the circuit diagram.

2. Select AC 130 Volt from the supply panel and switch on the supply.
   - case 1 → $W_1$ = power dissipated in RL branch, keeping switches 1-2 and 3-4 closed, 5-6 open.
   - case 2 → $W_2$ = power dissipated in RC branch, keeping switches 1-2 and 5-6 closed, 3-4 open.
   - case 3 → $W$ = Total power consumed in circuit = $W_1 + W_2$, (all switches closed).
3. Similarly measure current $I_1$, $I_2$ and $I$ with the help of current measurement board.
4. Record the readings of the instruments carefully.

PRECAUTIONS:

1. Always keep measuring instruments in horizontal position i.e. table mode.
2. Select appropriate range of the instruments i.e. the range of the instruments should always be more than the existing value of current or voltage in the circuit.
3. Don't touch the resistance even after switching off the supply as it might have been heated up.

POINTS TO REMEMBER:

1. Multiplication factor = (Voltage Range * Current Range * pf of Wattmeter) / Max scale
2. Actual reading of wattmeter = Multiplication factor * Reading of wattmeter.

Teacher's Signature :

CALCULATIONS:

$$R_1 = \frac{V_{R_1}}{I_1} = \frac{110}{0.56} = 196.43\,\Omega$$

$$R_2 = \frac{V_{R_2}}{I_2} = \frac{98}{0.5} = 196\,\Omega$$

$$X_C = \frac{V_C}{I_2} = \frac{72}{0.5} = 144\,\Omega$$

$$Z_L = \frac{V_L}{I_1} = \frac{42}{0.56} = 75\,\Omega$$

$$P_{R_L} = I_1^2(R_1 + r) \Rightarrow \frac{64}{(0.56)^2} - 196.43 = 7.65\,\Omega = r$$

$$X_L = \sqrt{Z_L^2 - r^2} = \sqrt{75^2 - 7.65^2} = 74.6\,\Omega$$

$$X_L = \omega L \Rightarrow L = \frac{X_L}{2\pi f} = \frac{74.6}{2 \times 3.14 \times 50} = 237.5\ mH$$

$$X_C = \frac{1}{\omega C} \Rightarrow C = \frac{1}{2\pi f X_C} = \frac{1}{2 \times 3.14 \times 50 \times 144} = 22.1\ \mu F$$

$$\cos\theta_1 = \frac{R_1 + r}{\sqrt{(R_1 + r)^2 + X_L^2}} = \frac{204.08}{\sqrt{41648.64 + 5565.16}} = 0.939$$

$$\cos\theta_2 = \frac{R_2}{\sqrt{R_2^2 + X_C^2}} = \frac{196}{\sqrt{38416 + 20736}} = 0.806$$

$$\cos\theta = \frac{I_1\cos\theta_1 + I_2\cos\theta_2}{I} = \frac{0.56 \times 0.939 + 0.5 \times 0.806}{0.95} = 0.978$$

$$P_t = P_1 + P_2 = V_S I \cos\theta = 130 \times 0.95 \times 0.978 = 120.78\ W$$

$$P_1 (P_{RL}) = V_S I_1 \cos\theta_1 = 130 \times 0.56 \times 0.939 = 68.36\ W$$

$$P_2 (P_{RC}) = V_S I_2 \cos\theta_2 = 130 \times 0.5 \times 0.806 = 52.39\ W$$

OBJECTIVE: To study the constructional features of D.C. Machine and Transformer.

THEORY:

DC Machines

A DC generator is an electrical machine which converts mechanical energy into direct current electricity. This energy conversion is based on the principle of production of dynamically induced EMF. A DC generator can be used as a DC motor without any constructional changes and vice-versa is also possible. Thus, a DC generator or a DC motor can be broadly termed as a DC machine. These basic constructional details are also valid for the construction of a DC motor. The above figure shows the constructional details of a simple 4-pole DC machine. A DC machine consists of two basic parts : stator and rotor. Basic constructional parts of a DC machine are -

1. Yoke : the outer frame of a DC machine is called as yoke. It is made up of cast iron or steel. It not only ~~produces~~ provides mechanical strength to the whole assembly but also carries the magnetic flux produced by the field winding.
2. Poles and Pole shoes : Poles are joined to the yoke with the help of bolts or welding. They carry field winding and pole shoes are fastened to them. Pole shoes serve two purposes :- (i) they support field coils and (ii) spread out the flux in air gap uniformly.
3. Field Winding : They are usually made of copper. Field coils are former wound and placed on each pole and are connected in series. They are wound in such a way that, when energized,

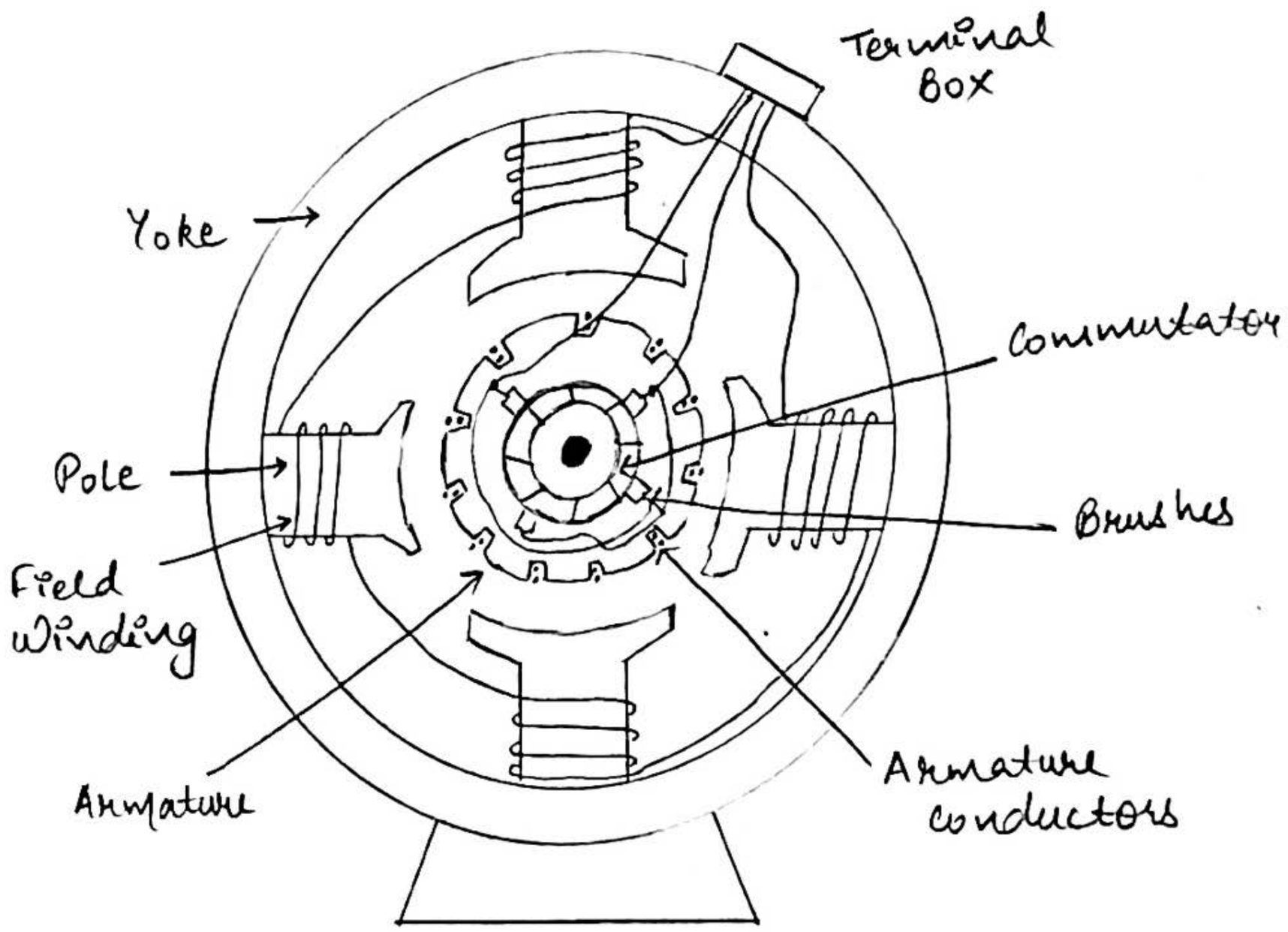


Fig. 1 : DC Machine

they form alternate North and South poles.

4. Armature Core : It is the rotor of the machine. It is cylindrical in shape with slots to carry armature winding. The armature is built up of thin laminated circular steel disks for reducing eddy current losses. It may be provided with air ducts for the axial air flow for cooling purposes. Armature is keyed to the shaft.

5. Armature Winding : It is usually a formed wound copper coil which rests in armature slots. The armature conductors are insulated from each other and also from the armature core. Armature winding can be wound be one of the two methods :- lap winding or wave winding. Double layer lap or wave windings are generally used. A double layer winding means that each armature slot will carry two different coils.

6. Commutator and Brushes : Physical connection to the armature winding is made through a commutator-brush arrangement. The function of a commutator, in a DC generator, is to collect the current generated in armature conductors. Whereas, in case of a DC motor, commutator helps in providing current to the armature conductors. A commutator consists of a set of copper segments which are insulated from each other. The number of segments is equal to the number of armature coils. Each segment is connected to an armature coil and the commutator is keyed to the shaft. Brushes are usually made from copper or graphite. They rest on commutator segments and slide on the segments when the commutator rotates keeping the physical contact to collect or supply the current.

Transformer

On the basis of construction, transformers can be classified into two types as -

1. Core type transformer :- In core type transformer, windings are cylindrical former wound, mounted on the core limbs. The cylindrical coils have different layers and each layer is insulated from each other. Materials like paper, cloth or mica can be used for insulation. Low voltage windings are placed nearer to the core, as they are easier to insulate.
2. Shell type transformer :- The coils are former wound and mounted in layers stacked with insulation between them. A shell type transformer may have simple rectangular form, or it may have a distributed form.

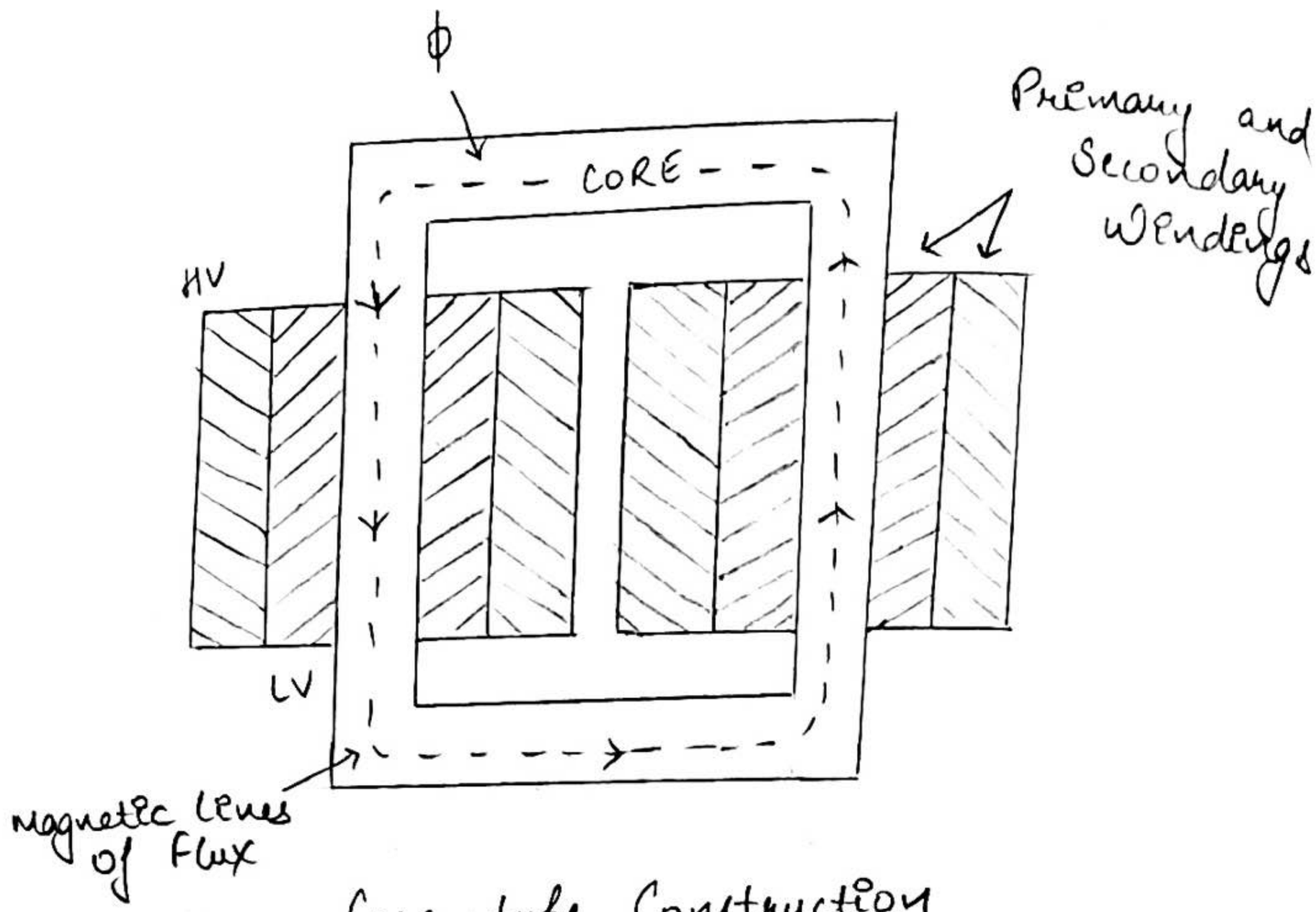


Core-type Construction

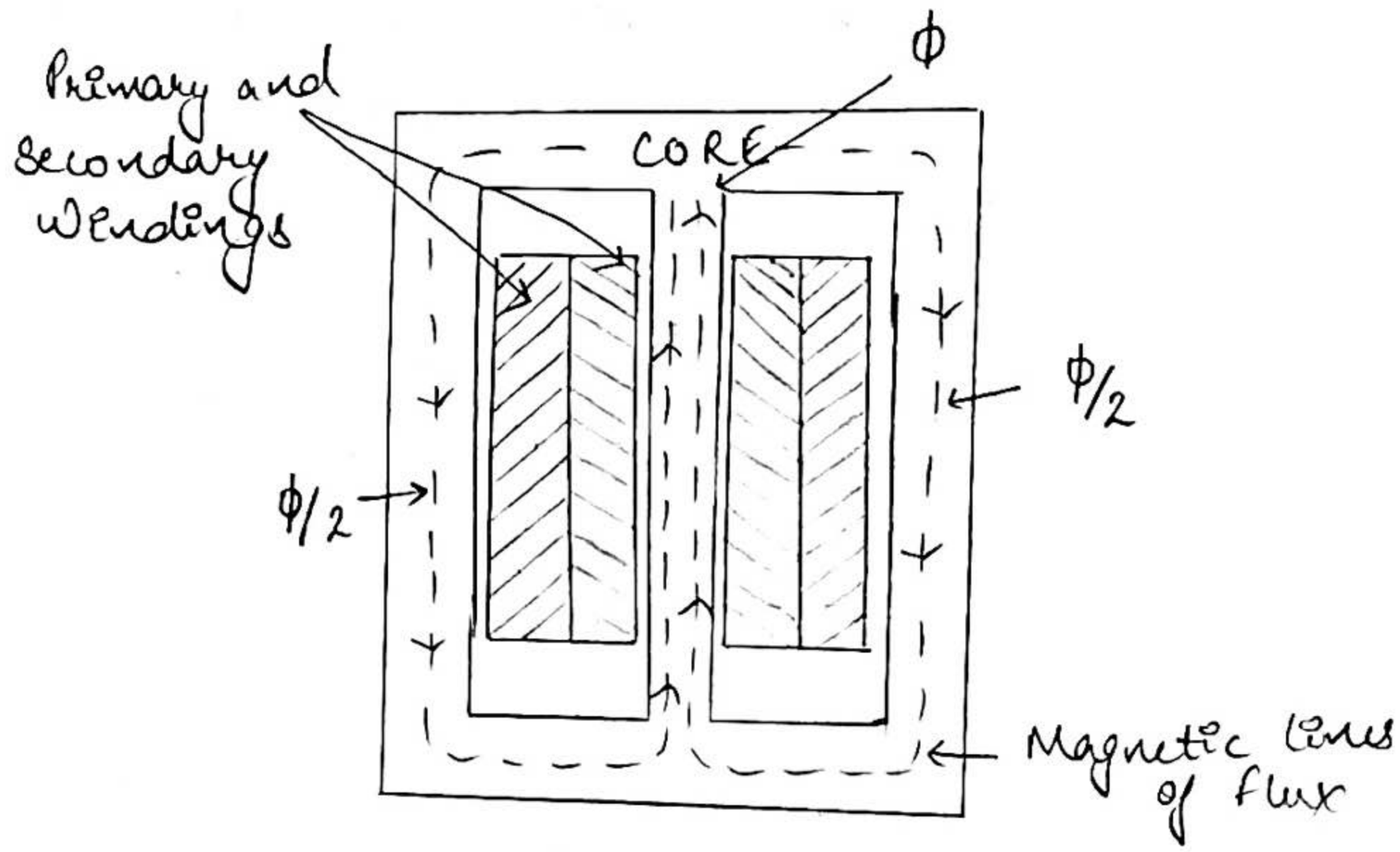


Shell-type Construction

Fig. 2 : Transformer (Core Type and Shell Type)

OBJECTIVE: To study and determine experimentally for the single phase magnetic circuit.

(1) The variation of reactance of coil for change in length of air gap.

(2) The variation of core loss for change in length of air gap.

EQUIPMENT: (1) Variable Inductor (2) AC ammeter : 5A

(3) Wattmeter : 150V, 5A (4) AC Voltmeter : 150V

THEORY: The inductance of coil is defined as flux linkage per unit current.

Inductance, $L = \frac{N\phi}{I}$, where N = no. of turns, $\phi$ = flux, I = current.

Now, $\phi = \frac{mmf}{reluctance} = \frac{NI}{R}$ thus, $L = \frac{NNI}{R}$, now reluctance

R of the flux path is the sum of reluctance of air gap $R_g$ and reluctance of iron $R_c$.

Reluctance, $X_L = 2\pi f/(R_g + R_c)$, where the reluctance can be written as $R_g = L_g/A_g\mu_g$ and $R_c = L_c/A_c\mu_c$ where $L_g$ and $L_c$ are the lengths of air gap and iron respectively.

$A_g$ and $A_c$ are the areas of cross section of flux power through air gap and iron respectively.

$\mu_g$ and $\mu_c$ are the permeability of air and iron respectively.

Therefore, $X_L = \frac{2\pi f N^2}{\frac{L_g}{A_g\mu_g} + \frac{L_c}{A_c\mu_c}}$

Date: 25/11/20

Expt. 6

OBJECTIVE: To study and determine experimentally for the single phase magnetic circuit.

(1) The variation of reactance of coil for change in length of air gap.

(2) The variation of core loss for change in length of air gap.

EQUIPMENT: (1) Variable Inductor (2) AC Ammeter : 5A

(3) Wattmeter 150V, 5A (4) AC Voltmeter : 150 V

CIRCUIT DIAGRAM:

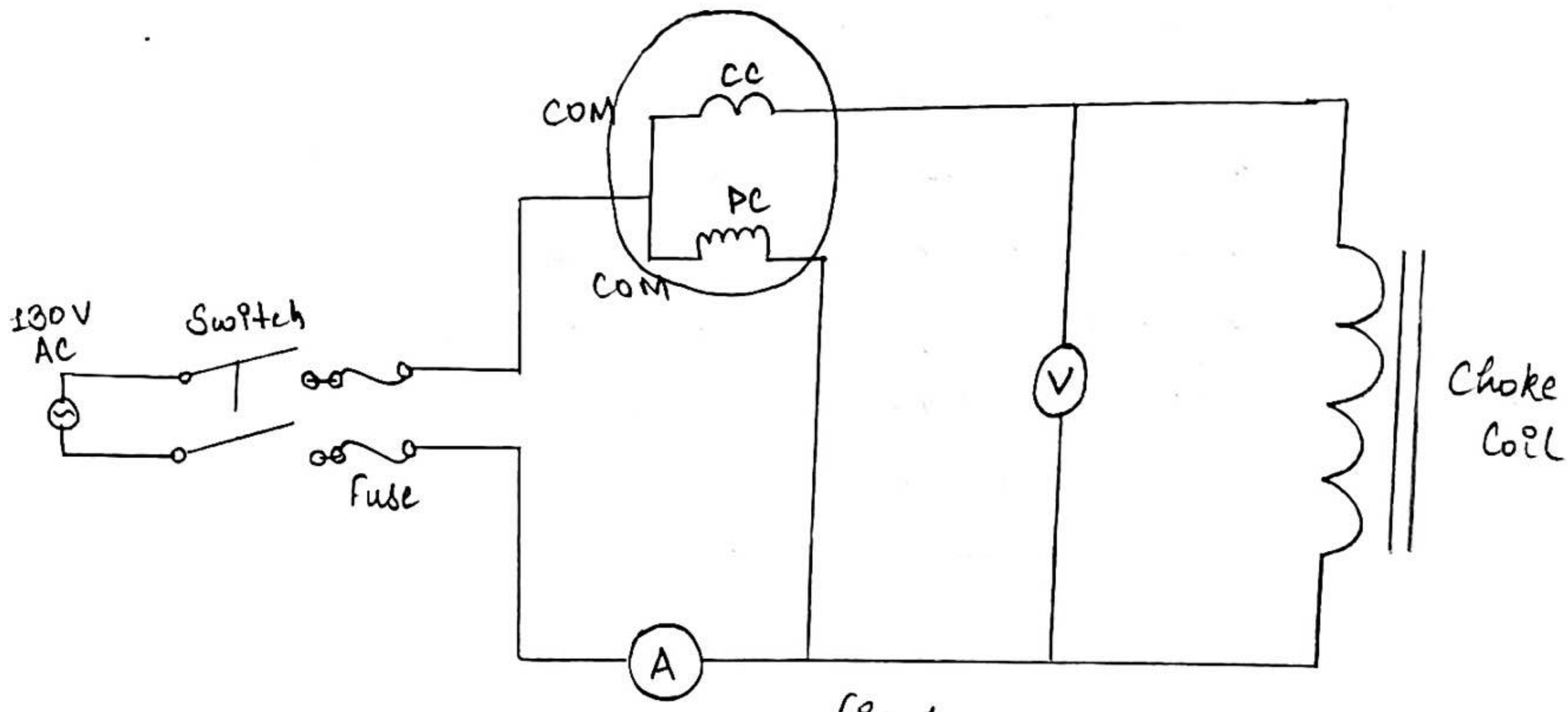


Fig. 1

OBSERVATION:

| S. No. | Air gap length (cm) | Input Voltage Supply (V) | Current (I) | Power (P) | Impedance (Z) | AC Resistance (R) | Reactance (X) |
|---|---|---|---|---|---|---|---|
| 1. | 1 cm | 124 V | 0.65 A | 11 x 1.875 = 20.625 W | 28.125 Ω | 7.2 Ω | 27.19 Ω |
| 2. | 2 cm | 124 V | 0.85 A | 12 x 1.875 = 22.5 W | 33.8 Ω | 7.2 Ω | 33.02 Ω |
| 3. | 3 cm | 124 V | 1.05 A | 13 x 1.875 = 24.375 W | 38.5 Ω | 7.2 Ω | 37.73 Ω |
| 4. | 4 cm | 124 V | 1.26 A | 14.5 x 1.875 = 27.1875 W | 41.38 Ω | 7.2 Ω | 40.55 Ω |
| 5. | 5 cm | 124 V | 1.56 | 17 x 1.875 = 31.875 W | 43.64 Ω | 7.2 Ω | 42.77 Ω |

Hence, when the length of air gap is large, the reluctance offered by the gap is large. Therefore, for large air gap lengths the reluctance of iron path can be ignored. For the choke coil in our laboratory, we can vary the gap length only, hence $X_L \propto \frac{1}{l_g}$.

Thus, if the length of air gap is very large as compared to the reluctance of iron, the reactance of iron and the reactance of the coil varies inversely as the length of air gap. With small air gap lengths, the reluctance of iron can't be ignored and hence, under these conditions the inverse relation will not hold good. AC resistance of the winding is given as $R_{ac} = (1.1 \text{ to } 1.3) R_{dc}$ where $R_{dc}$ is the dc resistance of winding.

PROCEDURE:

1. Connect the experimental set up as shown in the circuit diagram.
2. Adjust the air gap setting at 0.00cm and switch on the power supply.
3. Vary the gap length in steps and note down the corresponding readings of the instruments.
4. After switching off the supply, measure the dc resistance of choke coil by using multimeter.

Multiplication factor $= \frac{150 \times 2.5 \times 0.2}{40} = 1.875$

$R_{dc} = 6\Omega$

$R_{ac} = 1.2 R_{dc} = 1.2 \times 6 = 7.2\Omega$

CALCULATIONS:

① $P = VI\cos\phi$

$\cos\phi = \frac{P}{VI} = \frac{20.625}{124 \times 0.65} = 0.256$

$\phi = 75.17°$

$\frac{R}{Z} = \cos\phi$

$\therefore Z = \frac{7.2}{0.256} = 28.125\Omega$

$\frac{X_L}{Z} = \sin\phi$

$\therefore X_L = 28.125 \times 0.967 = 27.19\Omega$

② $P = VI\cos\phi$

$\cos\phi = \frac{P}{VI} = \frac{22.5}{124 \times 0.85} = 0.213$

$\phi = 77.7°$

$\frac{R}{Z} = \cos\phi$

$\therefore Z = \frac{7.2}{0.213} = 33.8\Omega$

$\frac{X_L}{Z} = \sin\phi$

$\therefore X_L = 33.8 \times 0.977 = 33.02\Omega$

③ $P = VI\cos\phi$

$\cos\phi = \frac{P}{VI} = \frac{24.375}{124 \times 1.05} = 0.187$

$\phi = 79.22°$

$\frac{R}{Z} = \cos\phi$

$\therefore Z = \frac{7.2}{0.187} = 38.5\Omega$

$\frac{X_L}{Z} = \sin\theta$

$\therefore X_L = 38.5 \times 0.98 = 37.73\Omega$

④ $P = VI\cos\phi$

$\cos\phi = \frac{P}{VI} = \frac{27.1875}{124 \times 1.26} = 0.174$

$\phi = 79.98°$

$\frac{R}{Z} = \cos\phi$

$\therefore Z = \frac{7.2}{0.174} = 41.38\Omega$

$\frac{X_L}{Z} = \sin\phi$

$\therefore X_L = 41.38 \times 0.98 = 40.55\Omega$

PRECAUTIONS:

1. Use low power wattmeter for getting accurate readings.
2. Do not allow the current to shoot beyond the specified rating of choke coil, i.e. 5A.
3. Keep all the measuring instrument in horizontal position.

POINTS TO REMEMBER:

1. Multiplication factor of wattmeter = (Voltage range * Current range * power factor of wattmeter) / Max scale.
2. Actual reading of wattmeter = multiplication factor * reading of wattmeter

(5) $P = VI\cos\phi$

$$\cos\phi = \frac{P}{VI} = \frac{31.875}{124 \times 1.56} = 0.165$$

$$\phi = 80.5^\circ$$

$$\frac{R}{Z} = \cos\phi$$

$$\therefore Z = \frac{7.2}{0.165} = 43.64\,\Omega$$

$$\frac{X_L}{Z} = \sin\phi$$

$$\therefore X_L = 43.64 \times 0.98 = 42.77\,\Omega$$

OBJECTIVE: To perform open and short circuit test to find its :-
1) Equivalent circuit parameters 2) Efficiency and Voltage regulation

EQUIPMENT: (1) 1 Phase Step down transformer (2) AC Ammeter 5A
(3) AC Voltmeter 300V & 50V (4) Wattmeter 62.5V, 5A (5) 1 Phase Variac

THEORY:

Open Circuit Test

The open circuit test is carried out on low voltage side due to convenience and availability of supply while the high voltage side is kept open. The test is performed to find out the magnetizing branch parameters ($X_m$ & $R_m$). The no load current is usually 2-6% of the rated full load current. Suppose the measurement of voltmeter, ammeter and wattmeter are $V_0$, $I_0$ and $P_0$, then the power loss in magnetizing branch is $P_0 = I^2 R_m$. The voltage drop in primary can be neglected at no load because no load current is very negligible, therefore -

$$P_1 = E_0 I_0 \cos\theta \Rightarrow \cos\theta = \frac{P_1}{V_0 I_0} \Rightarrow R_m = \frac{V_0}{I_0}\cos\theta \Rightarrow X_m = \frac{V_0}{I_0}\sin\theta$$

Short Circuit Test

The short circuit test is carried out on high voltage side, while low voltage side is short circuited by a thick wire. The voltage required to send full load current through the transformer is about 5% of the rated voltage. Hence, the power input is dissipated as copper losses in primary and secondary windings. Equivalent circuit is shown in the figure. If the measurement of voltmeter, ammeter and wattmeter are $V_{sc}$, $I_{sc}$ and $P_{sc}$ then -

Date: 2/12/20

Expt. 7

OBJECTIVE: To perform open and short circuit test to find out:-
1) Equivalent circuit parameters 2) Efficiency and Voltage regulation

EQUIPMENT: (1) 1 Phase Step Down Transformer (2) AC Ammeter 5A (3) AC Voltmeter 300V & 50V (4) Wattmeter 62.5V, 5A (5) 1 Phase Variac

CIRCUIT DIAGRAM:

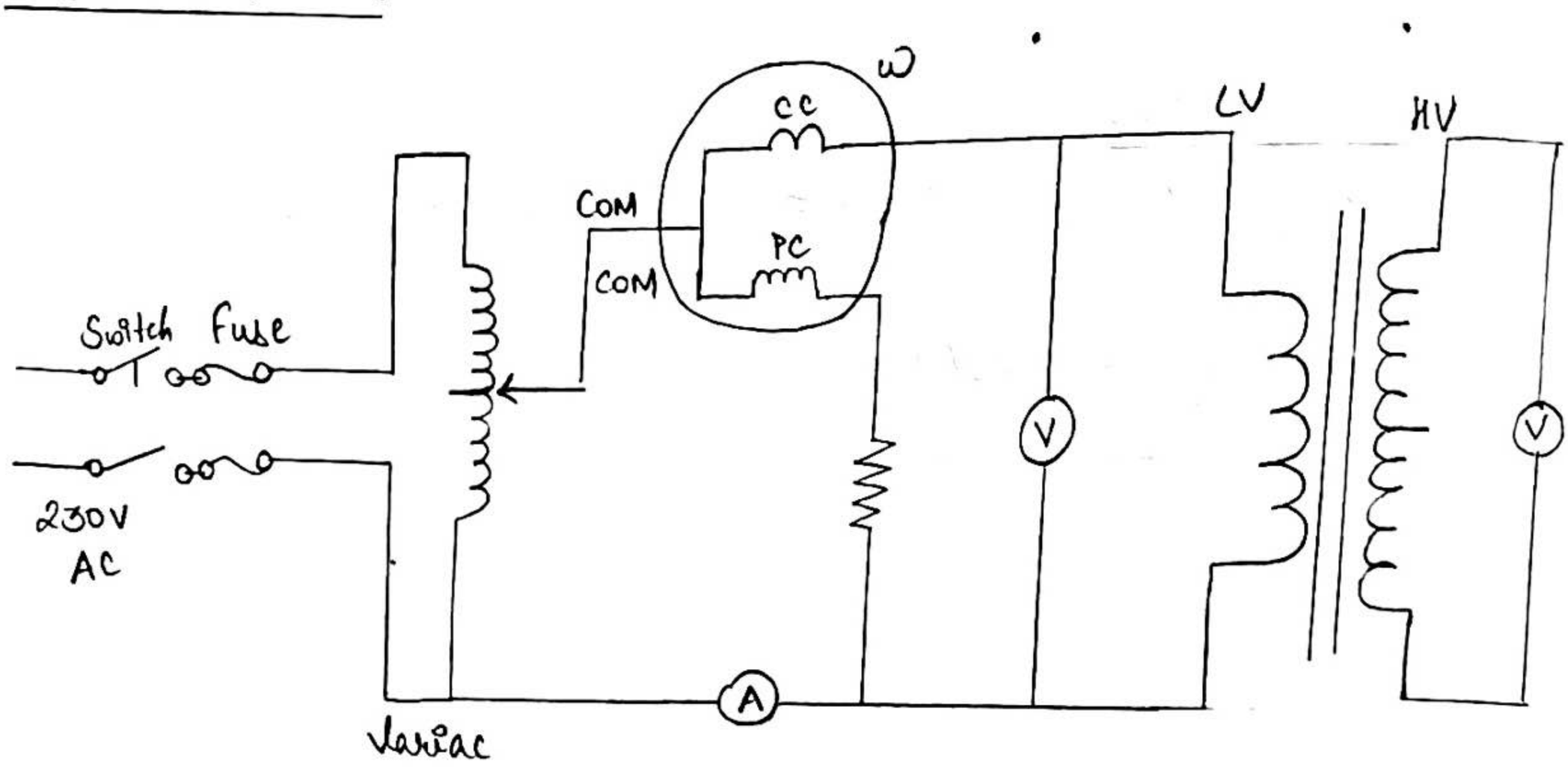


Fig. 1: Open Circuit Test

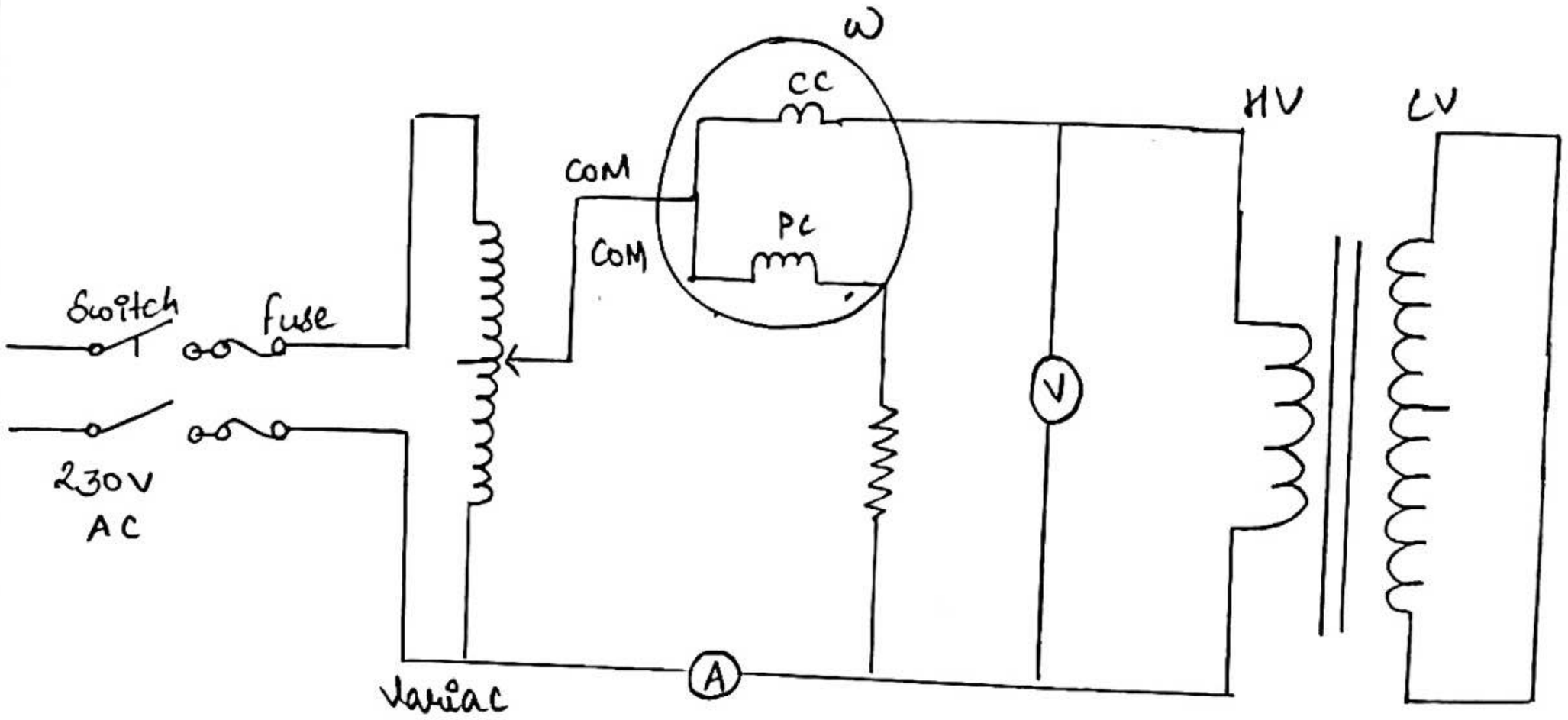


Fig. 2: Short Circuit Test

$P_{sc} = I_{sc}^2 R_2 \Rightarrow Z_{sc} = \frac{V_{sc}}{I_{sc}} \Rightarrow X = \sqrt{Z_{sc}^2 - R_2^2}$

Efficiency

The efficiency is the ratio of useful power to the input power.

$$\text{Efficiency} = \frac{\text{output}}{\text{input}} = \frac{\text{output}}{(\text{output} + \text{losses})} = \frac{(1 - \text{losses})}{(\text{output} + \text{losses})}$$

Voltage Regulation

Voltage regulation is the change in magnitude of secondary voltage, when the rated load of specified power factor at rated voltage is thrown off while the primary is held constant

PROCEDURE:

Open Circuit Test

1. Connect the experiment set up as shown in the circuit diagram.
2. Vary input voltage in steps from about 40% of the rated voltage i.e. 10V to 24V.
3. Record ammeter, voltmeter and wattmeter readings.

Short Circuit Test

1. Connect the experiment set up as shown in the circuit diagram.
2. Vary input voltage in steps such that short circuit current does not exceed its rated value.
3. Record ammeter, voltmeter and wattmeter readings.

OBSERVATIONS:

Short Circuit Test

| S.No. | $V_{sc}$ | $I_{sc}$ | $P_{sc}$ | $R_2$ | $X$ |
|---|---|---|---|---|---|
| 1. | 9V | 2A | $8 \times 2 = 16W$ | $\frac{16}{2^2} = 4\Omega$ | $\sqrt{\left(\frac{9}{2}\right)^2 - 4^2} = 2.06\Omega$ |
| 2. | 14.6V | 3A | $19.6 \times 2 = 39W$ | $\frac{39}{3^2} = 4.33\Omega$ | $\sqrt{\left(\frac{14.6}{3}\right)^2 - (4.33)^2} = 2.23\Omega$ |
| 3. | 19.7V | 4A | $32 \times 2 = 64W$ | $\frac{64}{4^2} = 4\Omega$ | $\sqrt{\left(\frac{19.7}{4}\right)^2 - 4^2} = 2.87\Omega$ |

Open Circuit Test

| S.No. | $V_0$ | $I_0$ | $P_0$ | $V_2$ | $I_c = I_0 \cos\phi$ | $I_m = I_0 \sin\phi$ |
|---|---|---|---|---|---|---|
| 1. | 12V | 0.7A | $3 \times 2 = 6W$ | 88V | 0.497A | 0.49A |
| 2. | 18V | 1.05A | $6 \times 2 = 12W$ | 135V | 0.66A | 0.82A |
| 3. | 22V | 1.25A | $9 \times 2 = 18W$ | 172V | 0.81A | 0.95A |

$$\text{Multiplication factor} = \frac{62.5 \times 5 \times 1}{156.25}$$

$$= 2$$

OBJECTIVE: To perform LCR series resonance and find the resonance frequency.

EQUIPMENT: (1) LCR Resonance Kit (2) Function Generator

THEORY: In a series RLC circuit, there comes a frequency point where the inductive reactance of the inductor becomes equal in value to the capacitive reactance of the capacitor. In other words, $X_L = X_C$. The point at which this occurs is called the Resonant Frequency point ($f_r$) of the circuit, and as we are analysing a series RLC circuit, this resonance frequency produces a Series Resonance. At resonance, the two reactance cancel each other out thereby making a series LC combination act as a short circuit with the only opposition to current flow in a series resonance circuit being the resistance, R. In complex form, the resonant frequency is the frequency at which the total impedance of a series RLC circuit becomes purely "real", that is no imaginary impedance exist. This is because at resonance, they are cancelled out. So, the total impedance of the series circuit becomes just the value of the resistance and therefore, $Z = R$.

Then, at resonance, the impedance of the series circuit is at its minimum value and equal only to the resistance, R of the circuit. The circuit impedance at resonance is called the "dynamic impedance" of the circuit.

Resonant frequency $(f_r) = \dfrac{1}{2\pi\sqrt{LC}}$ ; Quality Factor $(Q) = \dfrac{1}{R}\sqrt{\dfrac{L}{C}}$

Date: 09/12/20

Expt. 8

OBJECTIVE: To perform LCR series resonance and find the resonant frequency.

EQUIPMENT: (1) LCR Resonance Kit (2) Function Generator

CIRCUIT DIAGRAM:

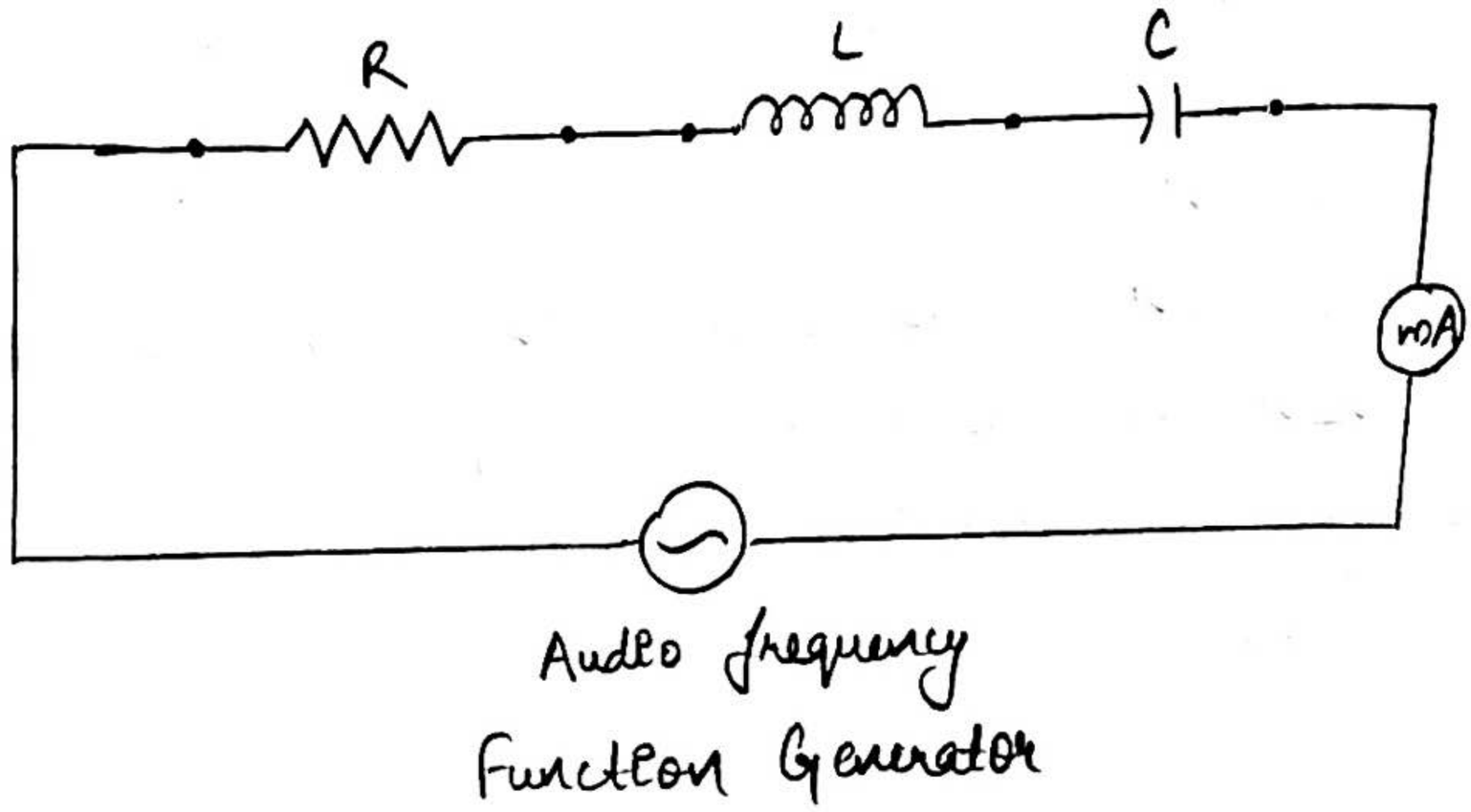


Fig. 1: Circuit connection for series resonance

OBSERVATIONS:

| Voltage | Current (in mA) | Frequency |
|---|---|---|
| 3V | 0.49 mA | 1 kHz |
| 3V | 0.99 mA | 2 kHz |
| 3V | 1.8 mA | 3 kHz |
| 3V | 3.26 mA | 4 kHz |
| 3V | 6.18 mA | 5 kHz |
| 3V | 12.6 mA | 6 kHz |
| 3V | 8.98 mA | 7 kHz |
| 3V | 5.51 mA | 8 kHz |
| 3V | 3.9 mA | 9 kHz |
| 3V | 2.84 mA | 10 kHz |

PROCEDURE:

For Series Resonance

1. Connect the circuit as shown in figure 1.
2. Switch ON the function generator using ON/OFF switch provided on the front panel.
3. Set the output of function generator to sine wave signal of approximately 3V AC rms and set the frequency at 100 Hz.
4. Increase the frequency in small steps towards 10kHz and note the observations. At a particular frequency current starts decreasing, the frequency at which current starts decreasing is the Resonant Frequency.
5. Repeat the procedure for different value of R and C.
6. Plot the graph between Frequency and Current.

RESULT: The resonant frequency is at 6kHz having a maximum current of 12.6 mA.

GRAPH:

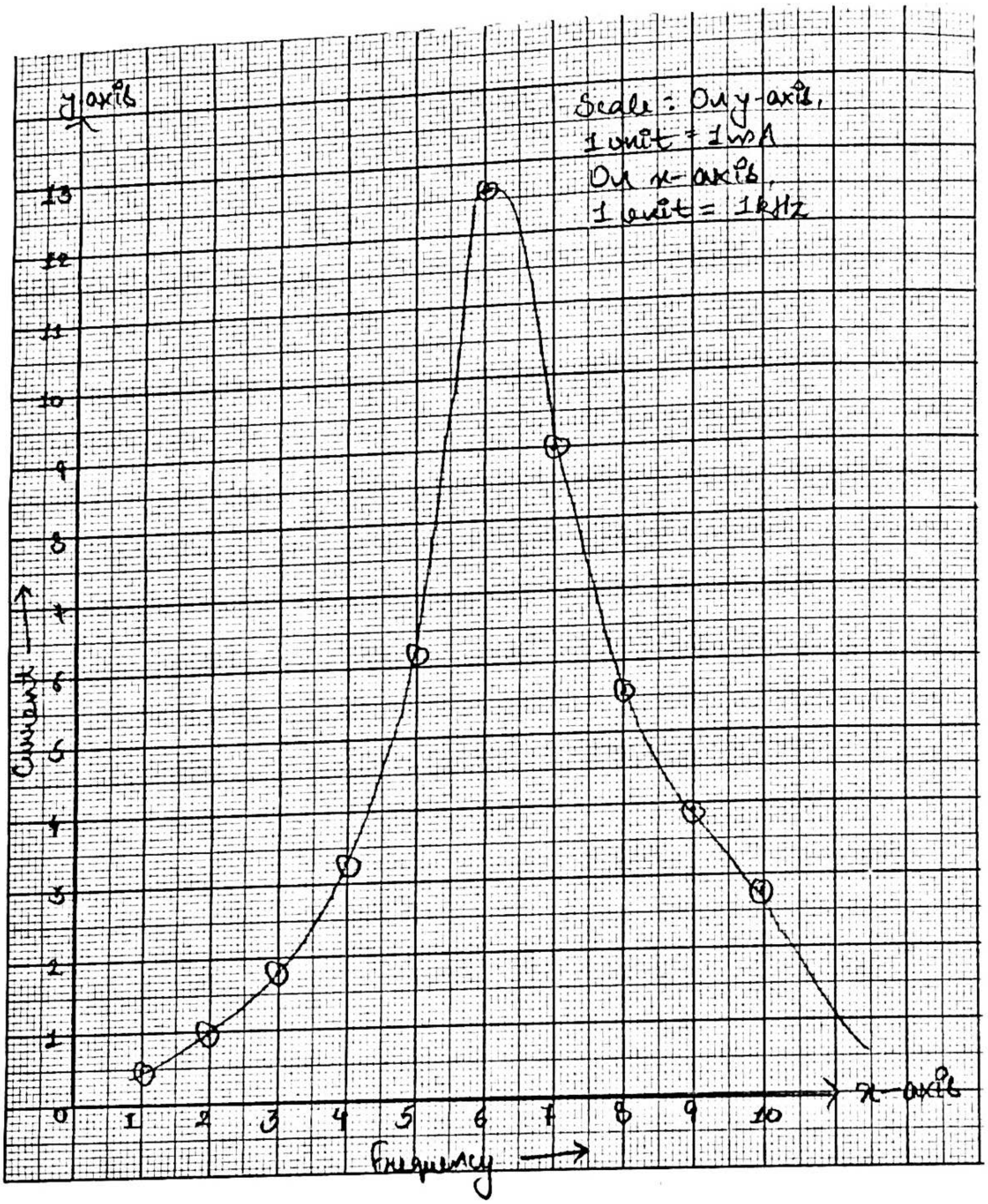
y axis
Scale: On y-axis,
1 unit = 1 mA
On x-axis,
1 unit = 1 kHz
13
12
11
10
9
8
7
6
5
4
3
2
1
0
Current
1
2
3
4
5
6
7
8
9
10
x-axis
Frequency

OBJECTIVE: To study the behaviour of magnetic core and plot the magnetising characteristic of DC generator.

EQUIPMENTS: (1) Single phase induction motor 230V (2) DC Generator (3) Voltmeter (DC) 0-300 V (4) Ammeter (DC) 0-1A

THEORY: The magnetisation curve gives the relation between field current ($I_f$) and the generated voltage ($E_g$) in the armature on no load.
To determine this, the DC machine is run as separately excited generator. The machine is run at full speed by a prime mover. The generated voltage is observed with change in the field current in steps. When the field current is zero, there sum amount of generated emf which is due to the residual magnetisation in the field coils. The linear range of the curve is due to the constant air gap reluctance and the field core. Finally due to saturation of the poles (field core) the generated voltage becomes constant.

PROCEDURE:

1. Connect circuit as shown in figure.
2. Start AC machine.
3. Take the voltmeter reading with DC supply to field switch off.
4. Now switch on DC supply and gradually vary the field current in steps. At every step, take the reading of voltmeter and ammeter.
5. Continue till the output voltage reaches 250V and start

Date : 16/12/20

Expt. 9

OBJECTIVE: To study the behaviour of magnetic core and plot the magnetising characteristic of DC generator

EQUIPMENTS: (1) Single phase induction motor 230V (2) DC Generator (3) DC Voltmeter 0-300V (4) DC Ammeter 0-1A

CIRCUIT DIAGRAM :

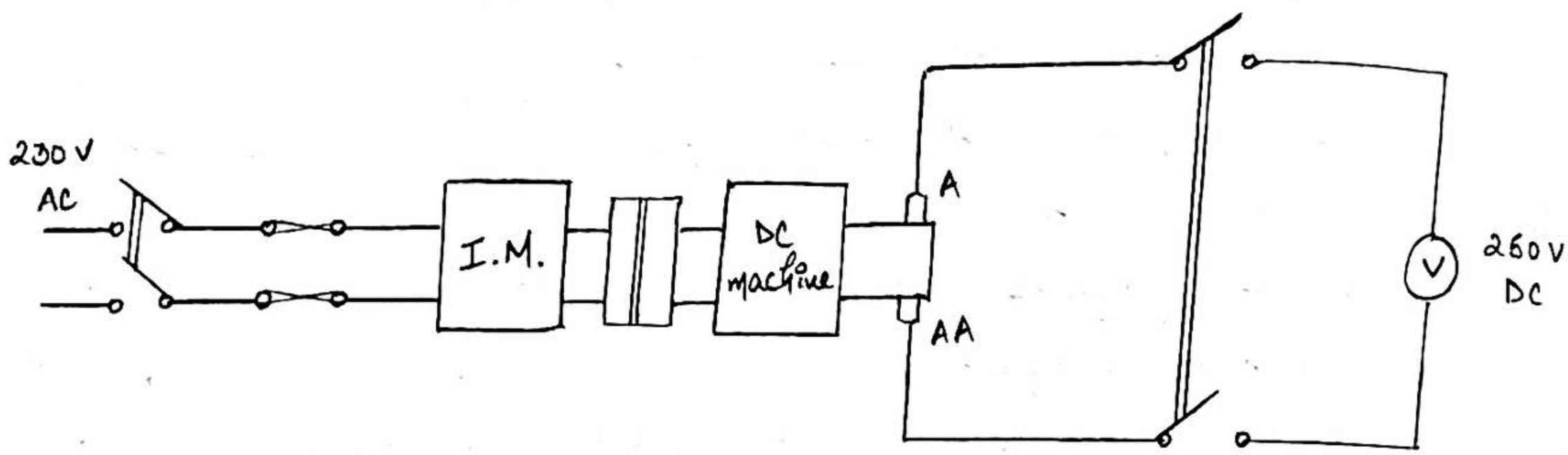


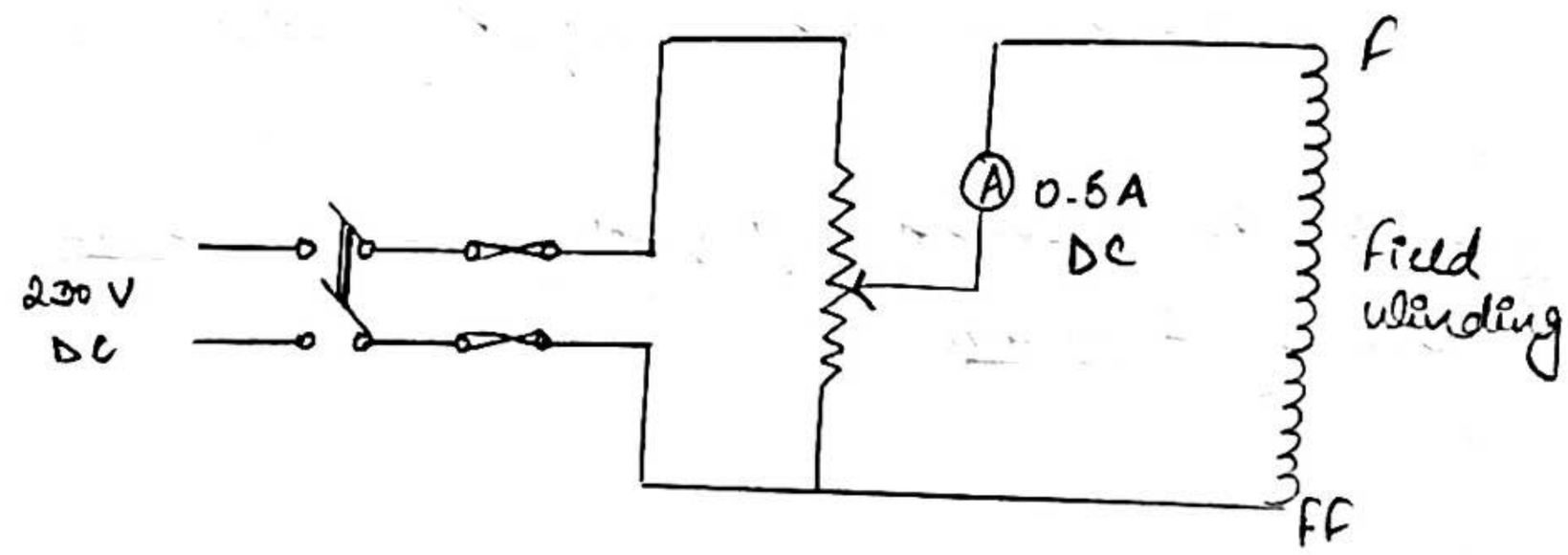


Fig. 1 : Circuit for magnetisation characteristic

Expt. No. _____ Date _____



decreasing the field current and at every step, take the ammeter and voltmeter readings. Take the voltmeter reading with the supply to field switched off.

Teacher's Signature : _____

## OBSERVATION:

For Increasing field Current

| S. No. | Voltage (V) | Current (A) |
|---|---|---|
| 1. | 16V | 0.01A |
| 2. | 28V | 0.02A |
| 3. | 40V | 0.03A |
| 4. | 60V | 0.04A |
| 5. | 76V | 0.05A |
| 6. | 96V | 0.06A |
| 7. | 108V | 0.07A |
| 8. | 120V | 0.08A |
| 9. | 132V | 0.09A |
| 10. | 148V | 0.12A |

For Decreasing Field Current

| S. No. | Voltage (V) | Current (A) |
|---|---|---|
| 1. | 140V | 0.1A |
| 2. | 132V | 0.09A |
| 3. | 124V | 0.08A |
| 4. | 108V | 0.07A |
| 5. | 96V | 0.06A |
| 6. | 88V | 0.05A |
| 7. | 76V | 0.04A |
| 8. | 56V | 0.03A |
| 9. | 40V | 0.02A |
| 10. | 20V | 0.01A |

GRAPH:

inc. field current

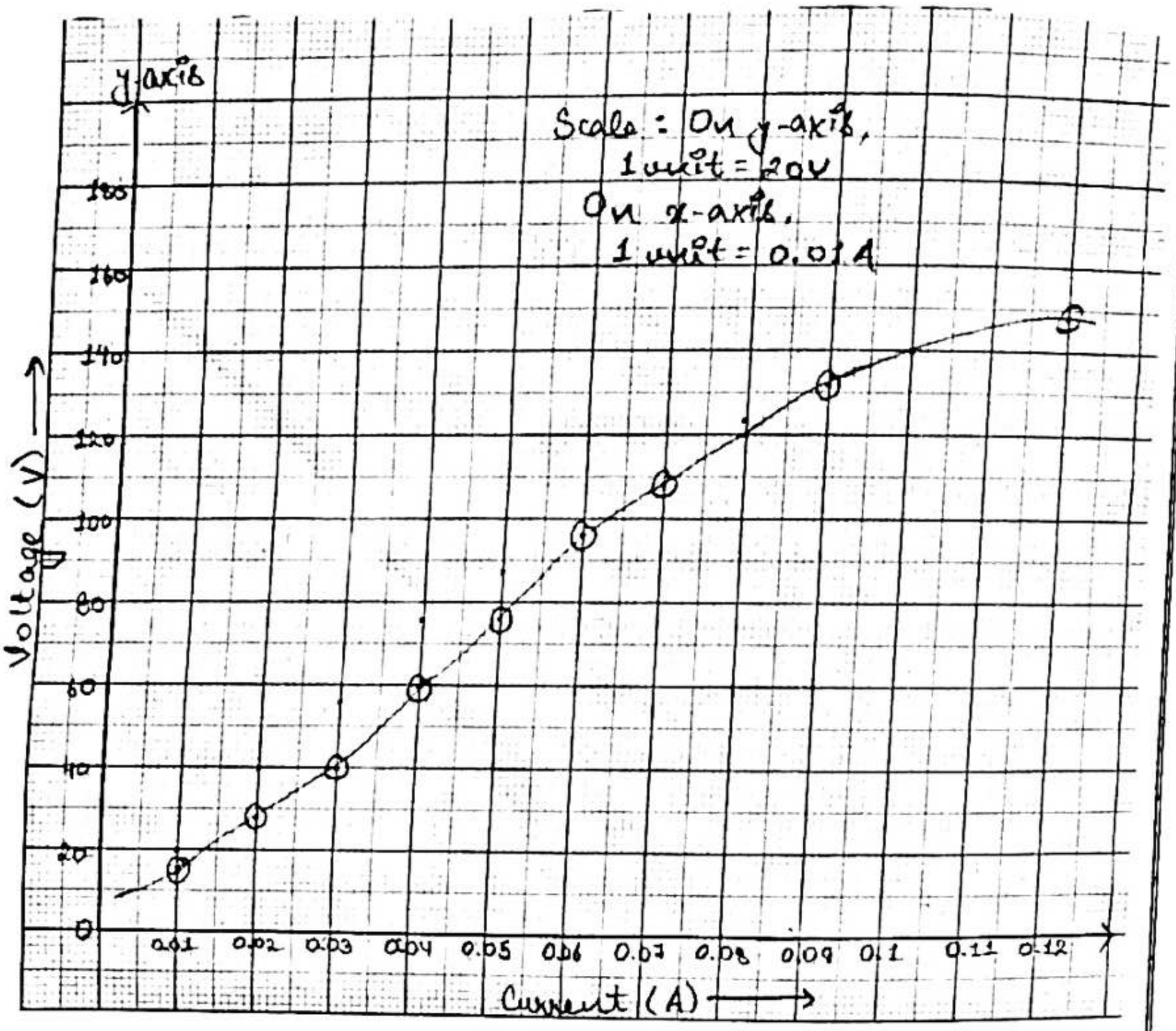

OBJECTIVE : To determine (1) relationship between phase and line voltage and current, (2) power and power factor by two-wattmeter method.

EQUIPMENT : (1) Voltmeter 150V, AC (2) Three phase balanced R-L load (3) C-M board (4) AC Ammeter 3A (5) Three phase transformer (6) Wattmeter 125V/5A

THEORY :

Power Measurement : The active power per phase in three phase circuit is given by $P_p = V_p I_p \cos\theta$ , $\theta$ = phase angle between phase voltage and phase current. $V_p$ is the phase voltage and $I_p$ is phase current. Total power in three phase circuit is given by $P = 3 V_p I_p \cos\theta$.

For Star connections , $V_p = \left(\frac{V_L}{\sqrt{3}}\right)$ and $I_p = I_L$

$$P = 3\left(\frac{V_L}{\sqrt{3}}\right)(I_L)\cos\theta = \sqrt{3}\, V_L I_L \cos\theta$$

For Delta connections , $V_p = V_L$ and $I_p = \left(\frac{I_L}{\sqrt{3}}\right)$

$$P = 3(V_L)\left(\frac{I_L}{\sqrt{3}}\right)\cos\theta = \sqrt{3}\, V_L I_L \cos\theta$$

$I_L$ is the line current and $V_L$ is the line voltage.

Power and power factor in a three phase balanced circuit is measured by one wattmeter or two wattmeter or three wattmeter method. Three wattmeter methods are used to measure power in unbalanced circuit.

For wattmeter $W_1$, the current through current coil is $I_a$ and voltage across potential coil is $V_a - V_f$.

Date: 23/12/20

Expt. 10

OBJECTIVE: To determine (1) relationship between phase and line voltage and current, (2) power and power factor by two wattmeter method.

EQUIPMENT: (1) Voltmeter 150V AC (2) Three phase balanced R-L load (3) C-M Board (4) AC Ammeter 3A (5) Three phase transformer (6) Wattmeter 125V/5A

CIRCUIT DIAGRAM:

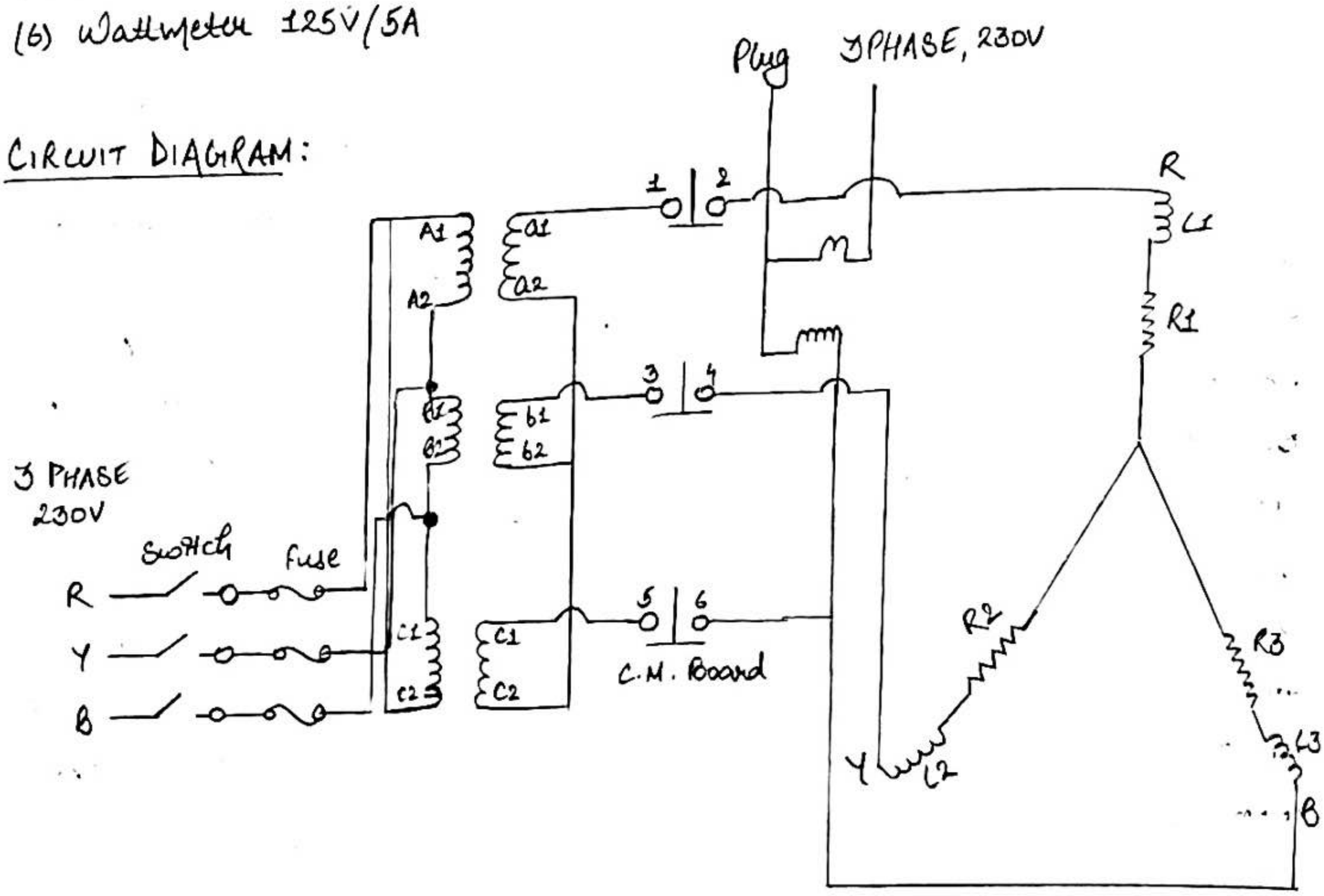


Fig. 1 : Circuit Diagram

For wattmeter $W_2$, the current through current coil is $I_c$ and voltage across potential coil is $V_c - V_b$.

Total instantaneous power of load $= V_a I_a + V_b I_b + V_c I_c$

Now, considering the three phase balanced load :-

Sum of all the three phase currents is zero, i.e. $I_a + I_b + I_c = 0$ for balanced circuit,

So, total instantaneous power $P = (V_a - V_b) I_a + (V_c - V_b) I_c$

$P =$ Instantaneous reading of $W_1$ + Instantaneous reading of $W_2$

Using phasor diagram, $W_1 = \sqrt{3} V_L I_L \cos(30° + \theta)$ and

$$W_2 = \sqrt{3} V_L I_L \cos(30° - \theta)$$

Such that power in 3-phase circuit will be,

$$W = W_1 + W_2 = \sqrt{3} V I \cos\theta, \ \theta \text{ is the phase angle of load}$$

Hence, power $P = W = W_1 + W_2 = \sqrt{3} V I \cos\theta$.

The power factor can be calculated as :

$$\cos\theta = \cos\left[\tan^{-1}\left\{\frac{\sqrt{3}(W_2 - W_1)}{(W_1 + W_2)}\right\}\right]$$

PROCEDURE:

1. Connect the experimental set up as shown in the circuit diagram.
2. Switch on the appropriate input supply and measure the following-
   a) Voltage across each phase
   b) Voltage between line terminals
   c) Voltage across R and L
   d) Current in each phase by using the current-measurement board.
3. Power : Wattmeter ($W_1$) → keeping switch 1-2 open and closing switches 3-4 & 5-6 closed
   ($W_2$) → keeping switch 3-4 open and closing switches 1-2

## OBSERVATION:

| Type of Circuit | Voltage (V) | | | | Current (A) | | $\frac{V_L}{V_P}$ | $\frac{I_L}{I_P}$ | Wattmeter Readings | | Total Power | Power factor |
|---|---|---|---|---|---|---|---|---|---|---|---|---|
| | $V_P$ | $V_L$ | $V_R$ | $V_{XL}$ | $I_P$ | $I_L$ | | | $W_1$ | $W_2$ | $P = W_1 + W_2$ | $\cos\theta$ |
| STAR | 64V | 114V | 44V | 20V | 0.29A | 0.29A | 1.78 | 1 | 4x4 = 16W | 6x4 = 24W | 40W | 0.945 |

## CALCULATIONS:

$$\frac{V_L}{V_P} = \frac{114}{64} = 1.78$$

$$\frac{I_L}{I_P} = \frac{0.29}{0.29} = 1$$

$$P = W_1 + W_2 = 16 + 24 = 40W$$

$$\cos\theta = \cos\left[\tan^{-1}\left\{\sqrt{3}\,\frac{(24-16)}{(24+16)}\right\}\right] = 0.945$$

$$\text{Multiplication Factor} = \frac{126 \times 5 \times 1}{156.25} = 4$$

& 5-6 closed.

4. Record readings of all the instruments in the observations in table.

RESULT: From the observation,

$$V_p = \frac{V_L}{\sqrt{3}} = \frac{114}{\sqrt{3}} = 64V$$

$$I_p = I_L = 0.29\,A$$

$$P = W_1 + W_2 = 16 + 24 = 40W$$

and $\cos\theta = \cos\left[\tan^{-1}\left\{\sqrt{3}\,\frac{(24-16)}{(24+16)}\right\}\right] = 0.945.$