EEE1001-Electric Circuits and Systems

Presenter - Dr. Rupesh, ***Senior Member-IEEE***
Assistant Professor Grade 1
School of Electrical and Electronics Engineering
VIT Bhopal University

Module-4: Semiconductor Devices

- ✓ Introduction to semiconductors
- ✓ PN Junction Diode: Construction and operation with characteristics
- ✓ Rectifiers: Half-wave and Full-wave.
- ✓ Zener Diode: Construction and operation with characteristics
- ✓ Zener Regulator.
- ✓ BJT - Configuration – Characteristics
- ✓ CE Amplifier
- ✓ MOSFET

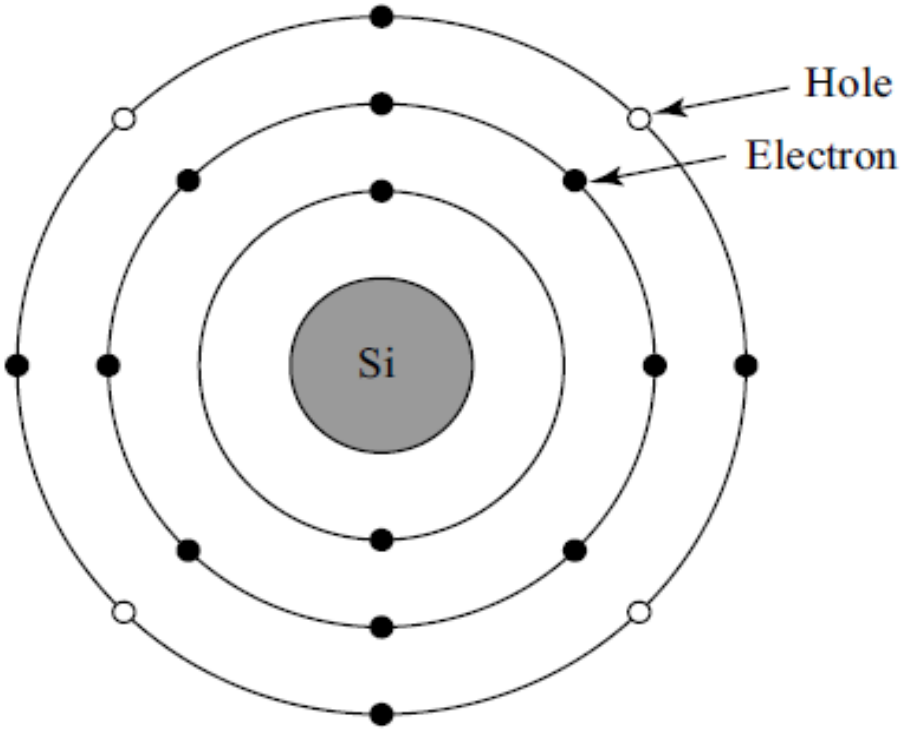

(a) Silicon atom

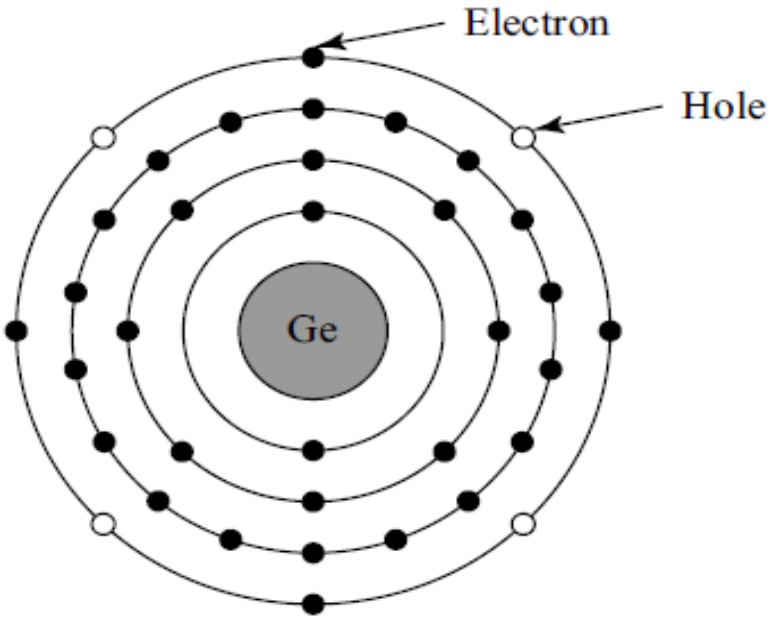

(b) Germaniun atom

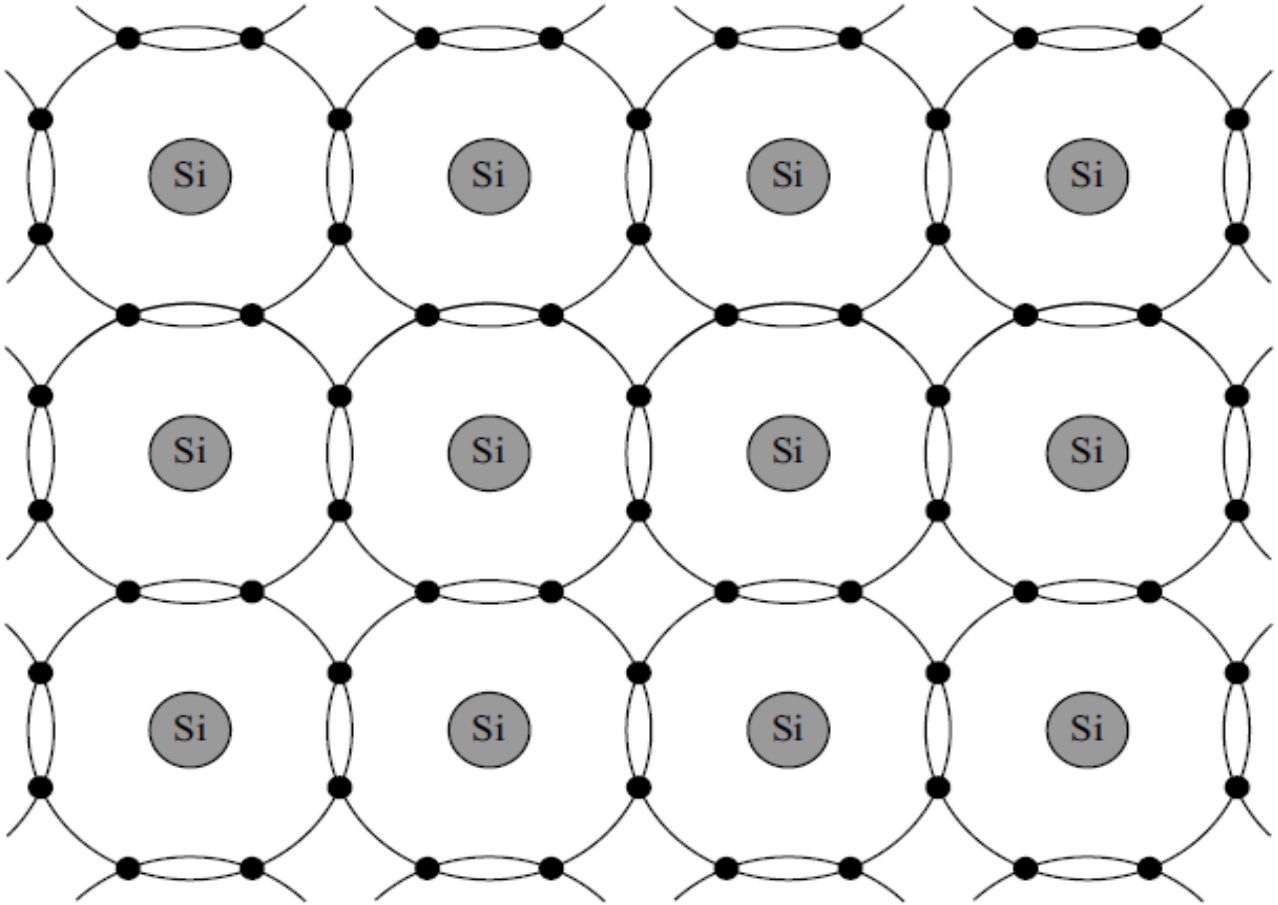

Covalent bonding of silicon atoms by sharing of valence electrons, for ease of understanding, only the outermost orbit of each silicon atom has been shown. The inner two orbits have been omitted.

Intrinsic Semiconductors

Extrinsic Semiconductors

- ✓ n-Type Semiconductor Material
- ✓ P-Type Semiconductor Material

n-Type Semiconductor Material

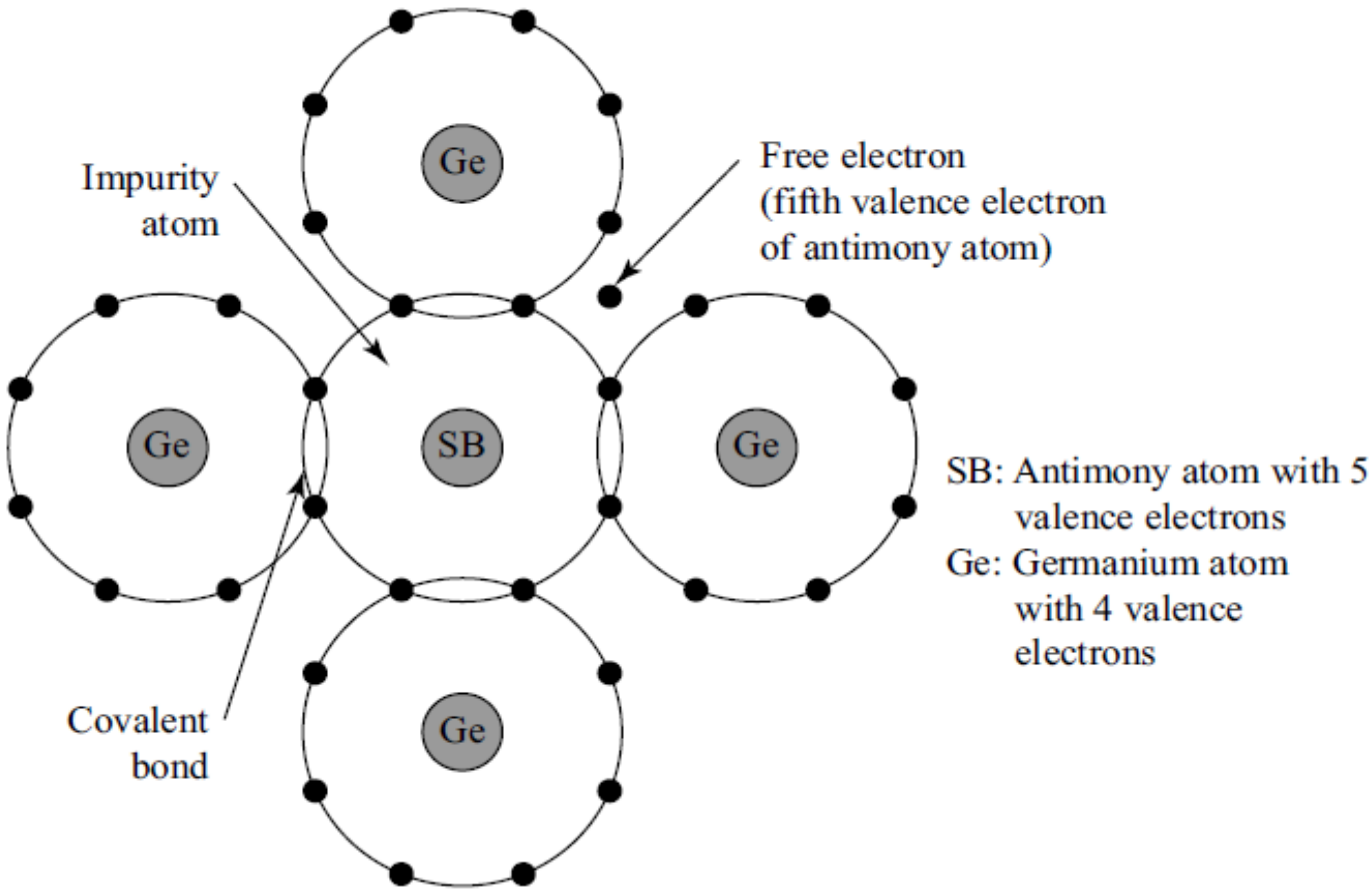

Covalent bonding in an n-type extrinsic semiconductor

p-Type Semiconductor Material

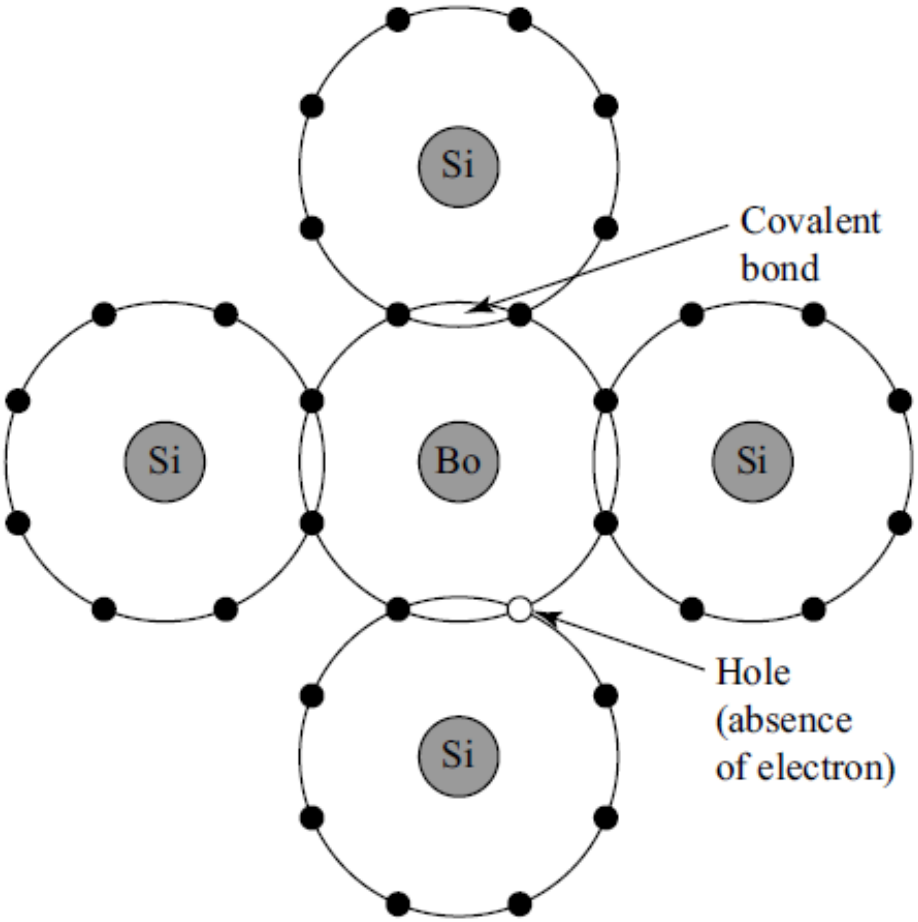

Si: Silicon atom with 4 valence electrons

Bo: Boron atom with 3 valence electrons

P-type semiconductor material

The p–n Junction

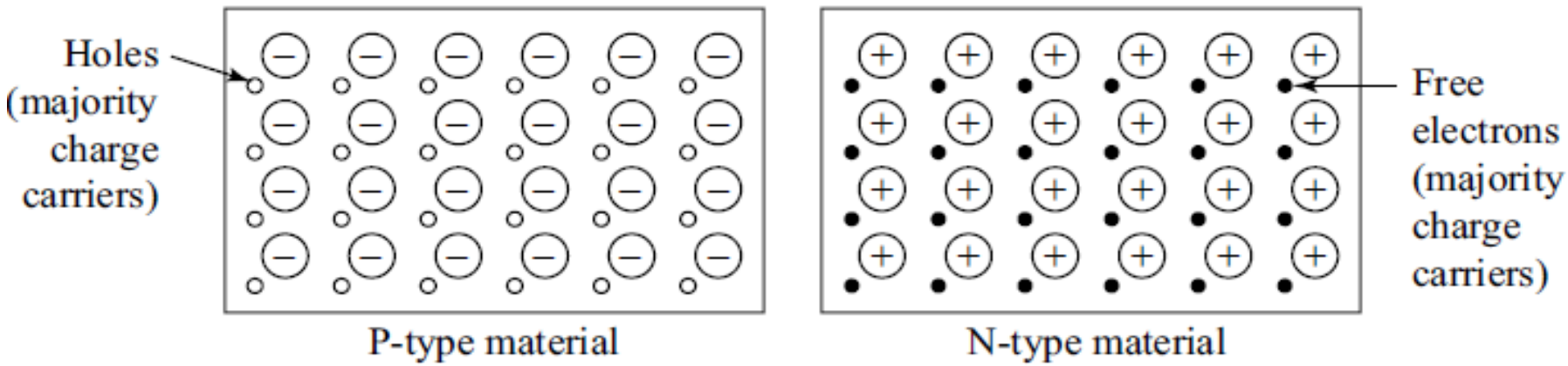

(a)

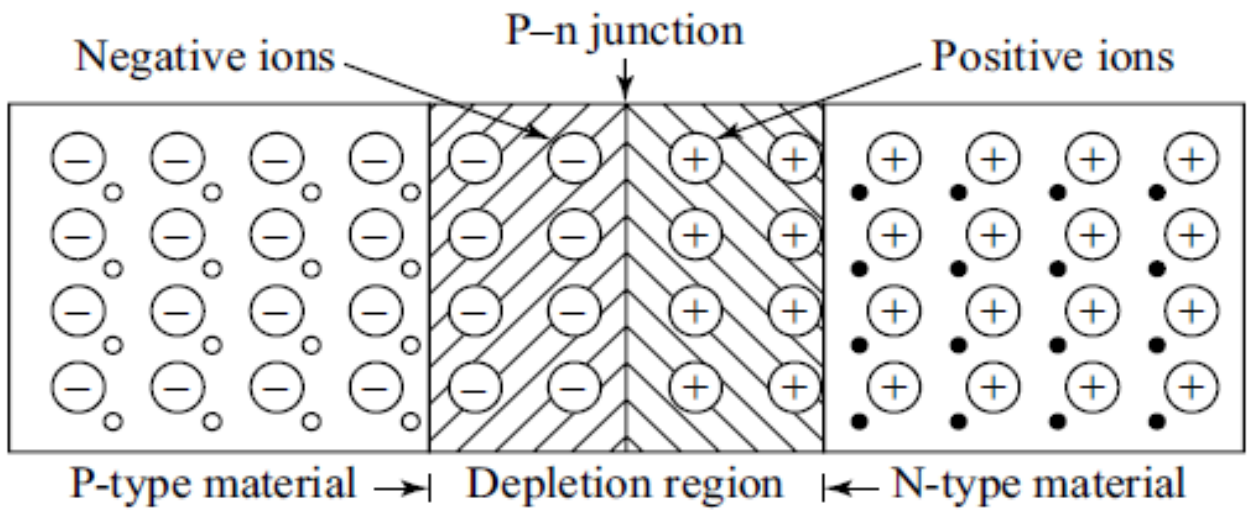

(b)

Biasing of p–n Junction

- ✓ A forward-biased p–n junction
- ✓ A reverse-biased p–n junction

A forward-biased p–n junction

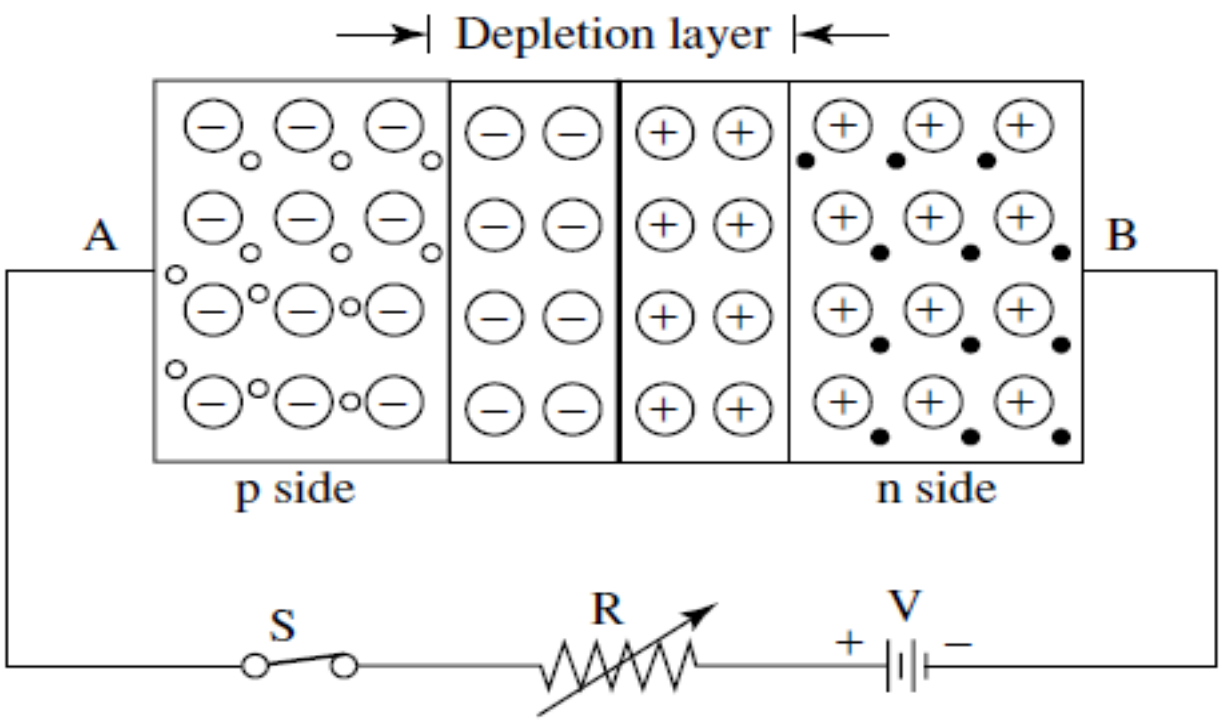

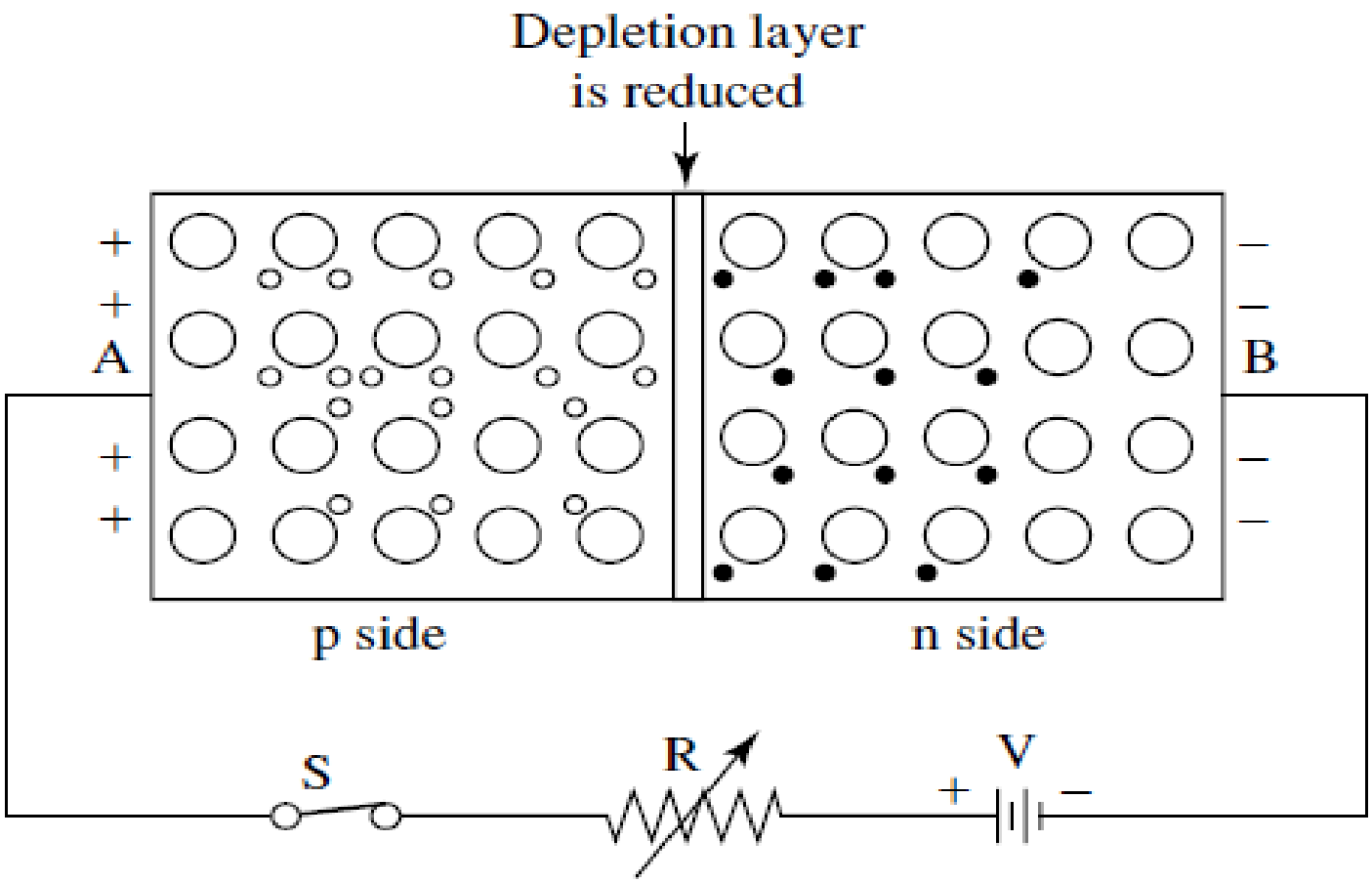
Depletion layer
is reduced
+
+
A
+
+
–
–
B
–
–
p side
n side
S
R
V
+
–

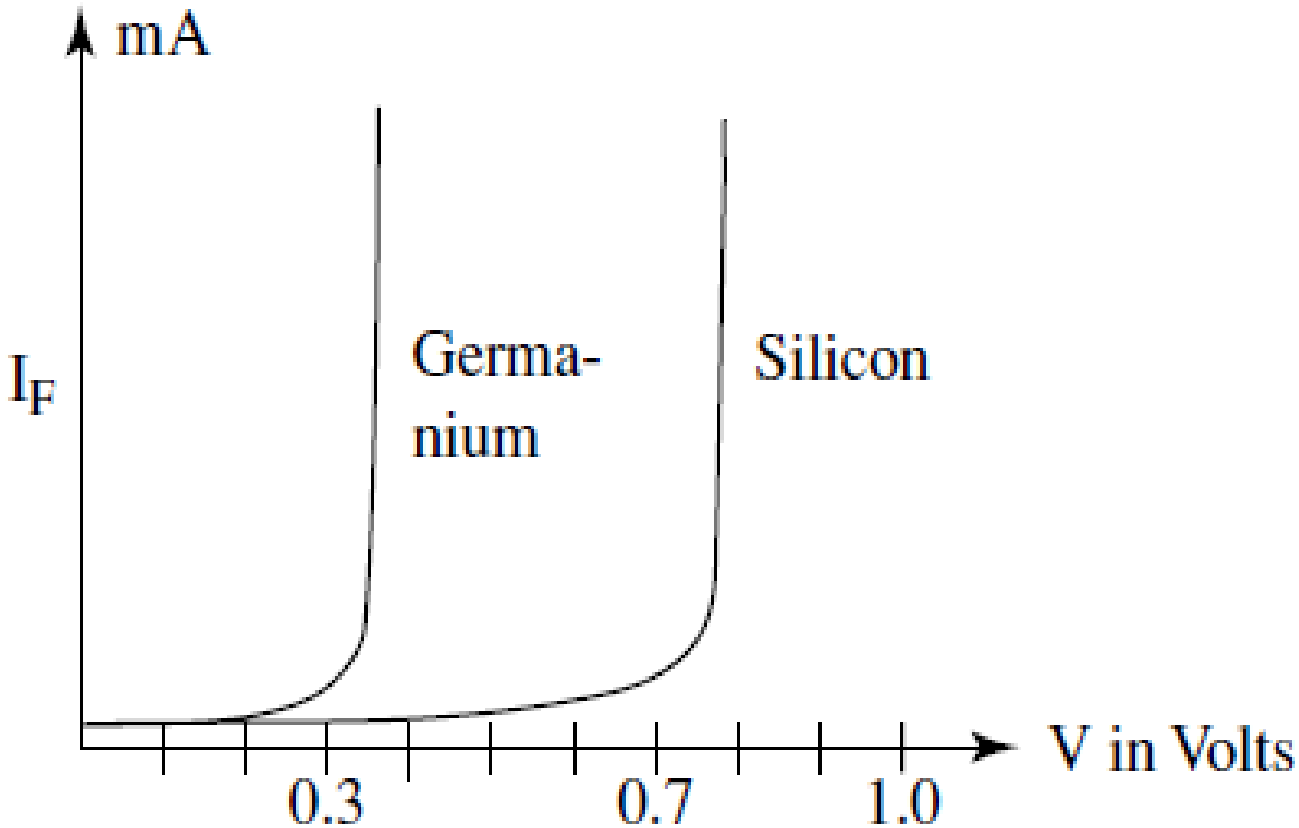
mA
I_F
Germa-
nium
Silicon
V in Volts
0.3
0.7
1.0

Reverse biasing of a p–n junction

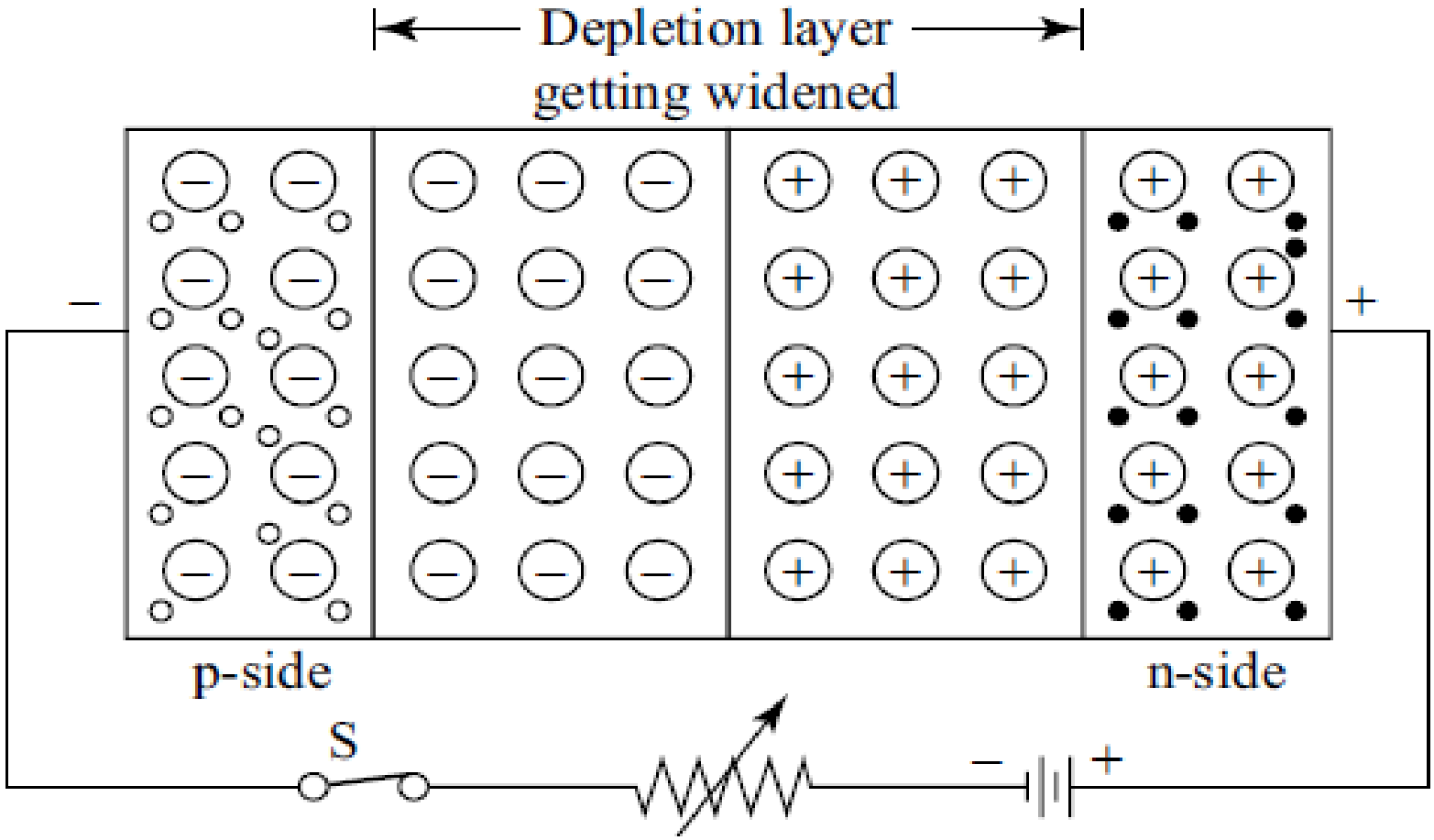

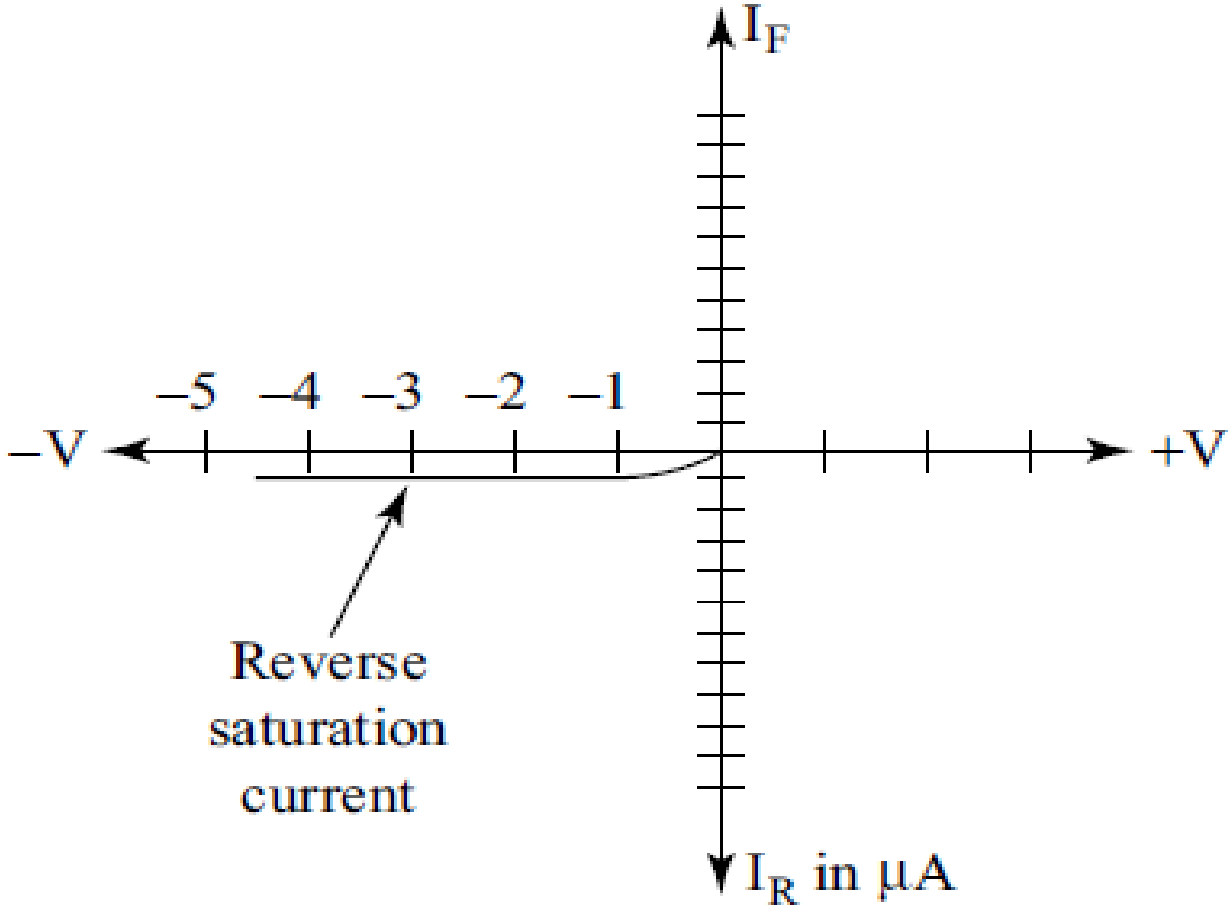
I_F
–5
–4
–3
–2
–1
–V
+V
Reverse
saturation
current
I_R in μA

Diodes

- Diode is an electronic component which permits the flow of current in one direction only.
- Diodes are made up of semiconductor material, therefore they are often called semiconductor diodes or crystal diodes.

Applications

- Diodes are used for rectification.
- Diodes are used in electrical meters for there protection.
- Diodes are used in wave shaping circuits.
- Diodes (LED) are used in display.

Material

- Silicon(Si) or germanium(Ge) are used.

Types

- PN junction diode
- Zener Diode
- Light Emitting Diodes (LED)
- Photo Diodes

PN Junction Diode

- This diode is made by p-type & n-type material.
- This PN junction diode works in forward bias i.e. anode is connected to positive terminal & cathode is connected to negative terminal.

Symbol

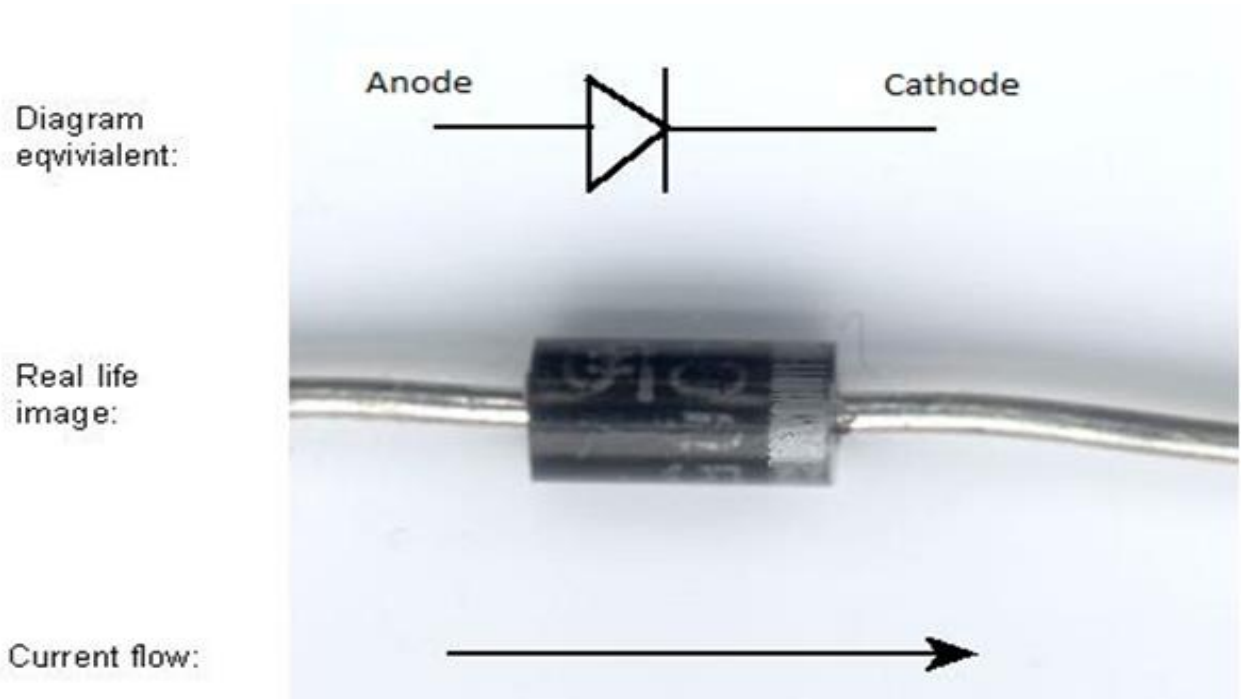

- There is a silver band on the one side of diode which is cathode (negative) terminal of the diode & the other side is anode (positive) terminal.

Volt–ampere Characteristic of a Diode

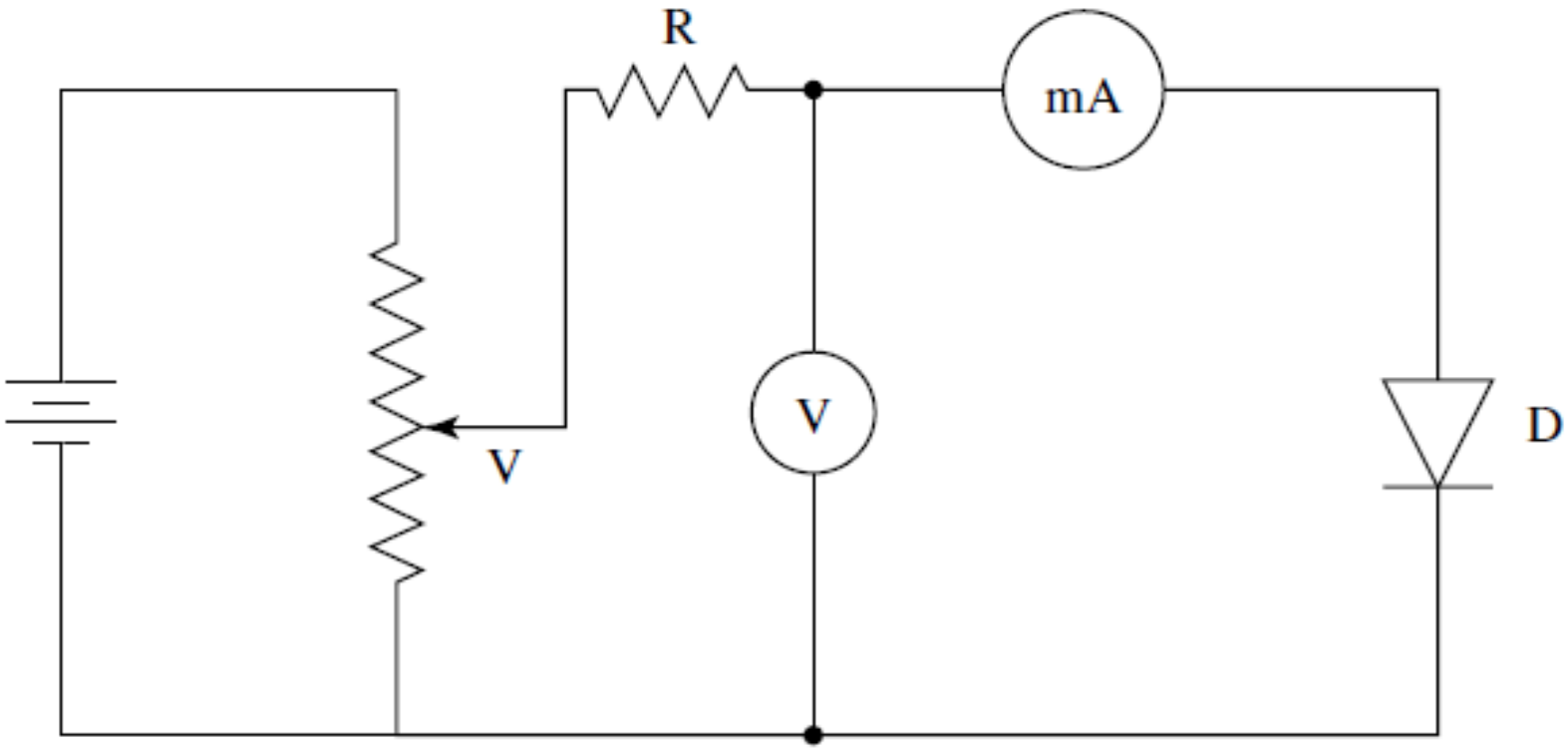

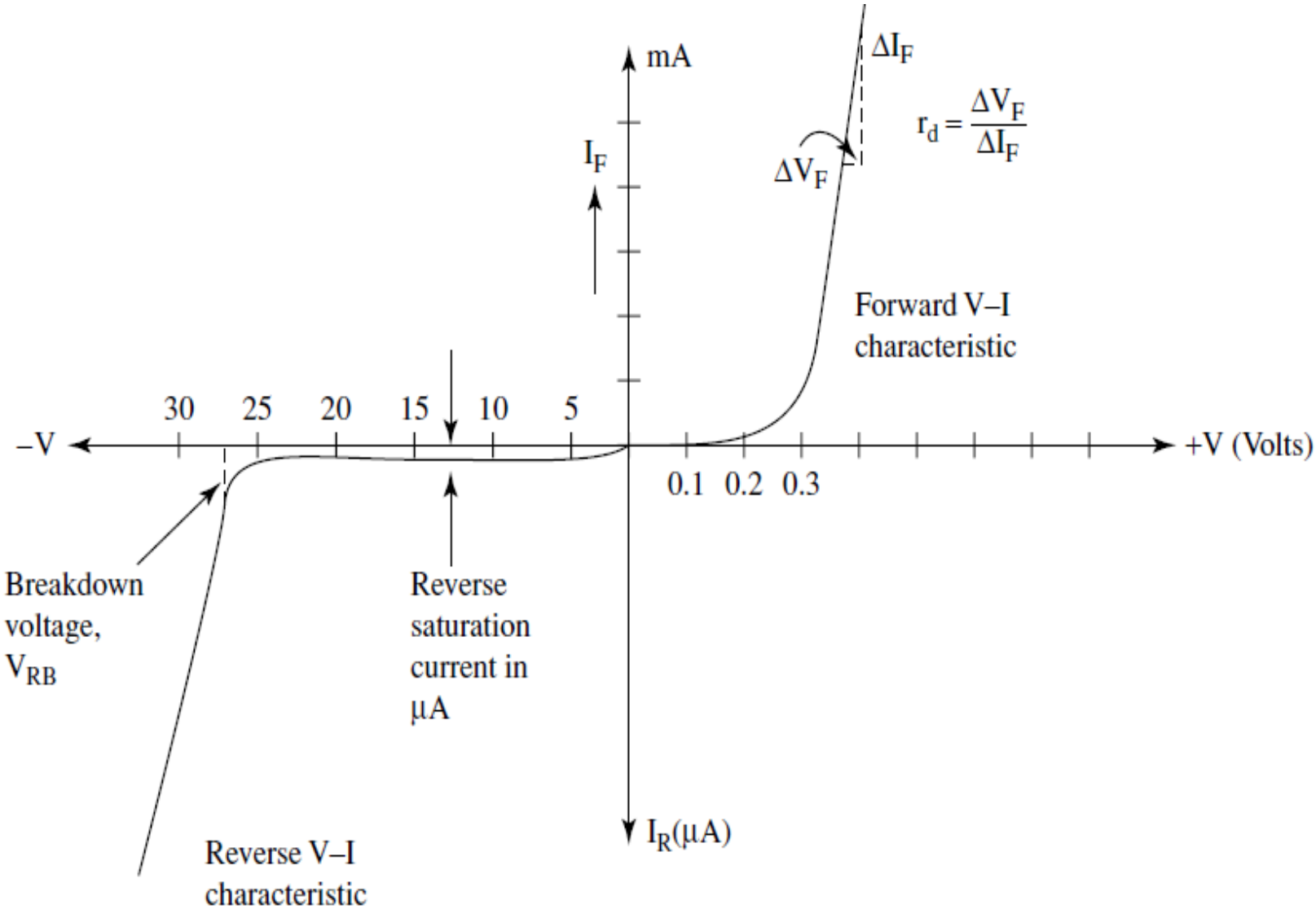
mA
ΔI_F
$r_d = \frac{\Delta V_F}{\Delta I_F}$
I_F
ΔV_F
Forward V–I characteristic
30
25
20
15
10
5
–V
+V (Volts)
0.1
0.2
0.3
Breakdown voltage, V_{RB}
Reverse saturation current in μA
I_R(μA)
Reverse V–I characteristic

Zener Diode

- Zener Diode works in reverse bias.
- Symbol of zener diode:

- There is black band which is negative terminal & other one is positive terminal.

Light Emitting Diode (LED)

- LED operates in forward bias.
- It emits light when connected in circuit.
- Symbol of LED:

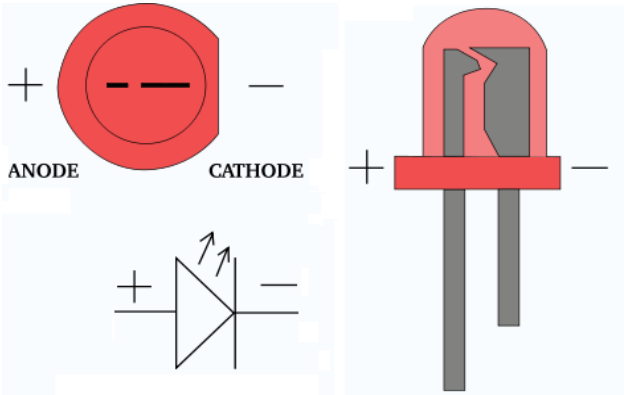

- The shorter lead of the LED is negative terminal & longer one is positive, also on the negative terminal there is a flat spot when we see from the top.

Photo Diode

- Often known as Photo detector.
- Photo Diode operates in reverse bias.
- Light falls on the PN junction of the photo diode which creates electron-hole pair in the depletion layer which causes flow of current.
- Current depends upon the light intensity
- When light incident on the photodiode then current flows in the circuit.

Transistor

- A **transistor** is a semiconductor device used to amplify and switch electronic signals. It is made of a solid piece of semiconductor material, with at least three terminals for connection to an external circuit.
- Device with three terminals where one terminal can be use to control the flow of current through the other two terminals.
- The three terminals are the Emitter, Base, and Collector

Types of transistor

- Junction transistor
- Field effect transistor

Zener diode

When a diode is reverse biased, only a minutely small current called saturation current flows (ideally no current should flow). If the reverse voltage is increased continuously, the junction breaks down, and suddenly a large reverse current flows. This reverse current is controlled or limited by connecting a suitable series resistance so that excessive heat produced due to heavy current flow may not burn the diode. If the reverse breakdown current is limited to the current-carrying capacity of the diode, it can be operated under reverse breakdown conditions. The V–I characteristic of the diode under the reverse-biased condition can be made to drop down almost vertically by proper doping of the semiconductor material. A diode with a very sharp breakdown voltage is called a Zener diode.

Zener diode

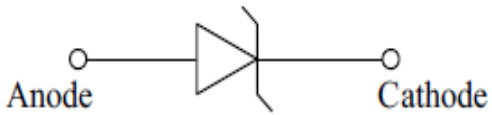
Anode
Cathode

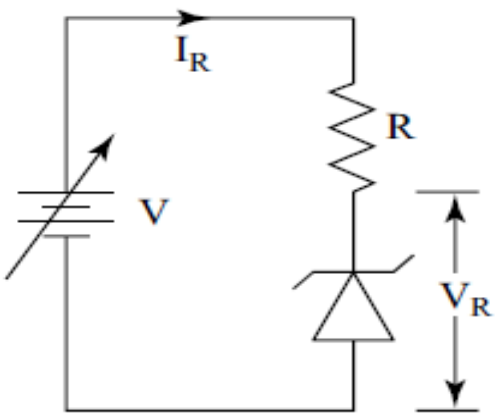
I_R
R
V
V_R

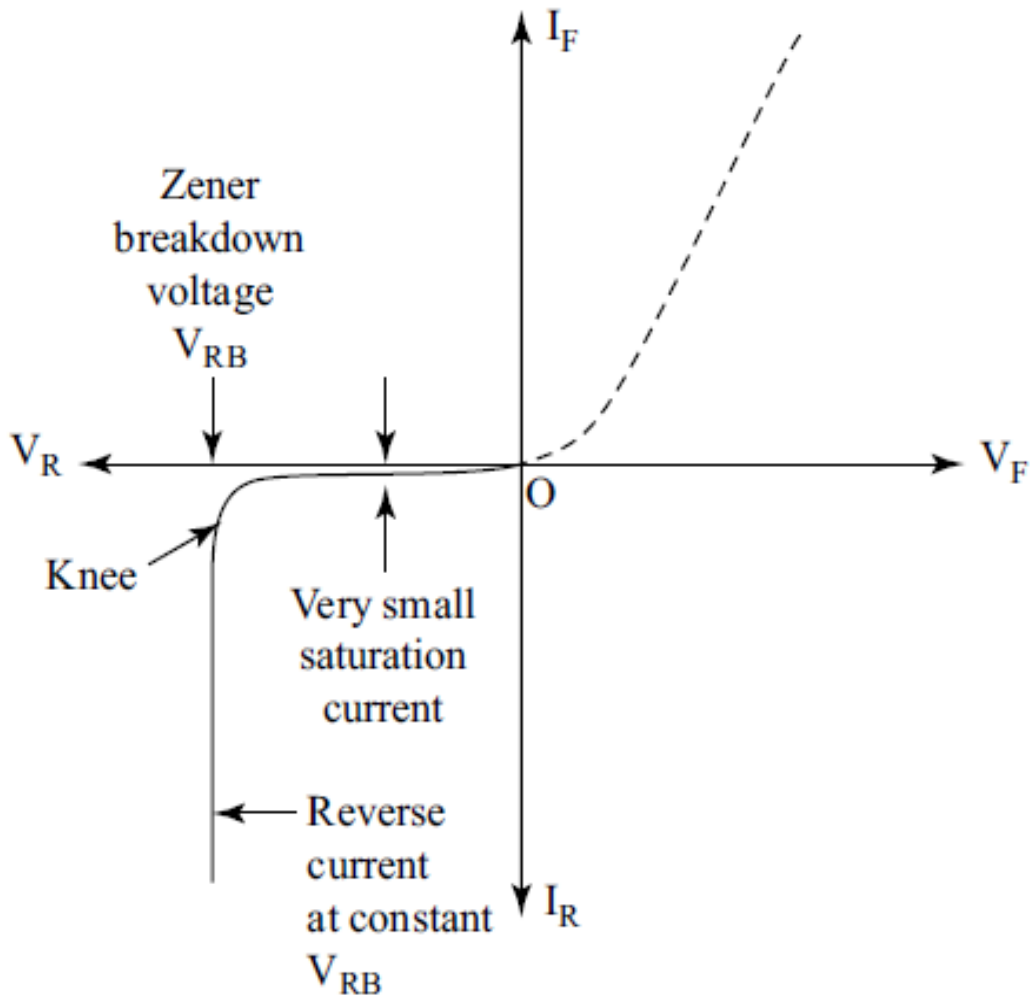
I_F
Zener
breakdown
voltage
V_{RB}
V_R
V_F
O
Knee
Very small
saturation
current
Reverse
current
at constant
V_{RB}
I_R

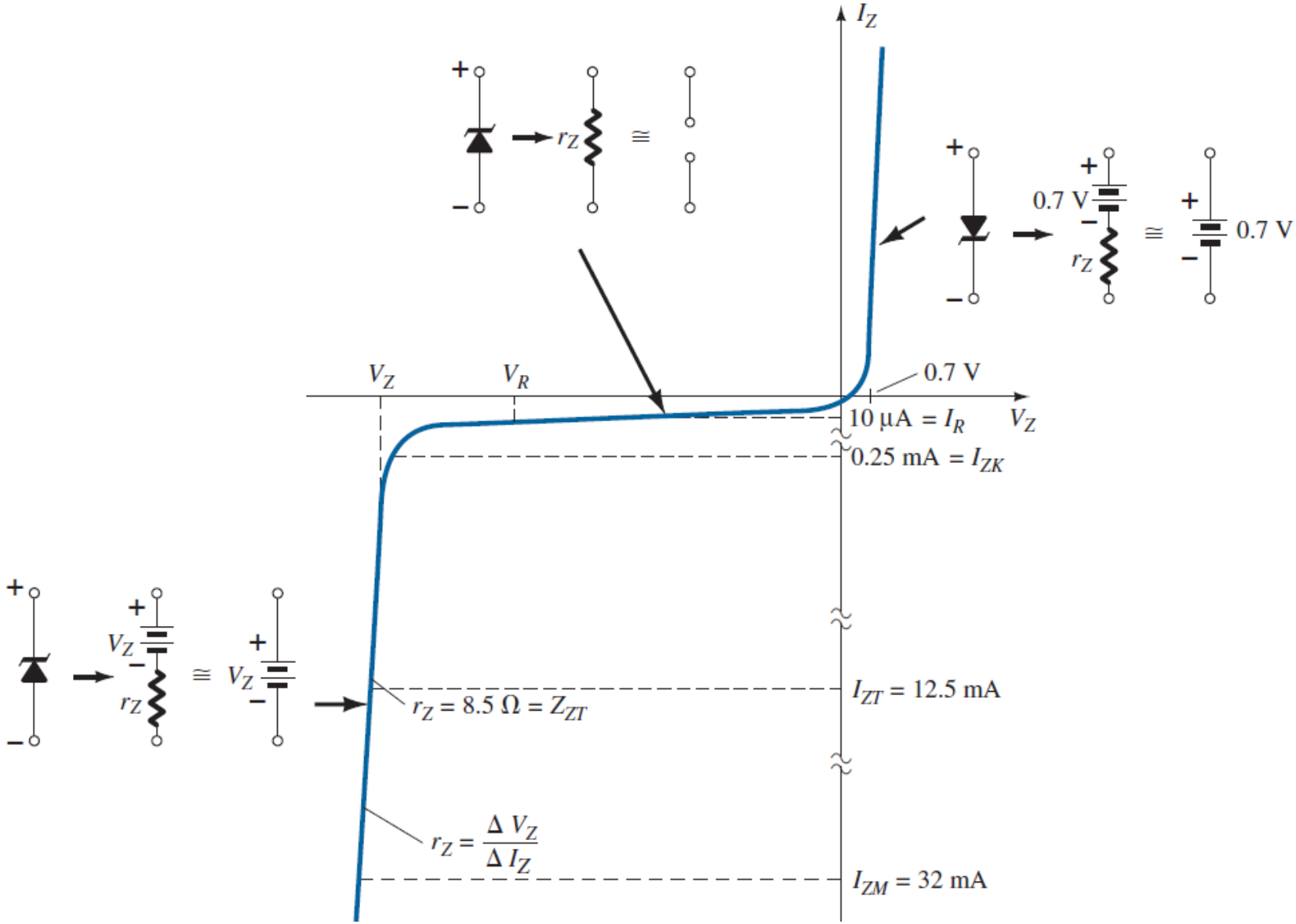
I_Z
V_Z
V_R
0.7 V
10 μA = I_R
0.25 mA = I_{ZK}
I_{ZT} = 12.5 mA
I_{ZM} = 32 mA
r_Z = 8.5 Ω = Z_{ZT}
$r_Z = \frac{\Delta V_Z}{\Delta I_Z}$
r_Z
≅
0.7 V
V_Z

Breakdown of a Zener diode may occur in two ways:

- ✓ Zener breakdown
- ✓ Avalanche breakdown

Zener breakdown

If the depletion layer of a diode is narrow and we apply a reverse voltage, the voltage per unit of width of the depletion layer becomes high. This establishes a strong electric field intensity which causes electrons to break away from their parent atoms. Thus, a depletion layer which was insulating in nature, becomes a conducting path. This kind of breakdown due to the creation of a strong electric field intensity, i.e., V/µm is called Zener breakdown.

Zener breakdown occurs at a voltage less than 5 V

Avalanche breakdown

If the width of the depletion layer is wide for a Zener breakdown, a sufficient reverse voltage may provide the free electrons (minority carriers causing saturation current) to gain sufficient energy to knockout electrons from the atoms of the semiconductor in the depletion region. This is called ionization by collision. The breakdown occurring this way is called avalanche breakdown.

Avalanche breakdown occurs at a voltage higher than 5 V

Zener Diode As Voltage Regulator

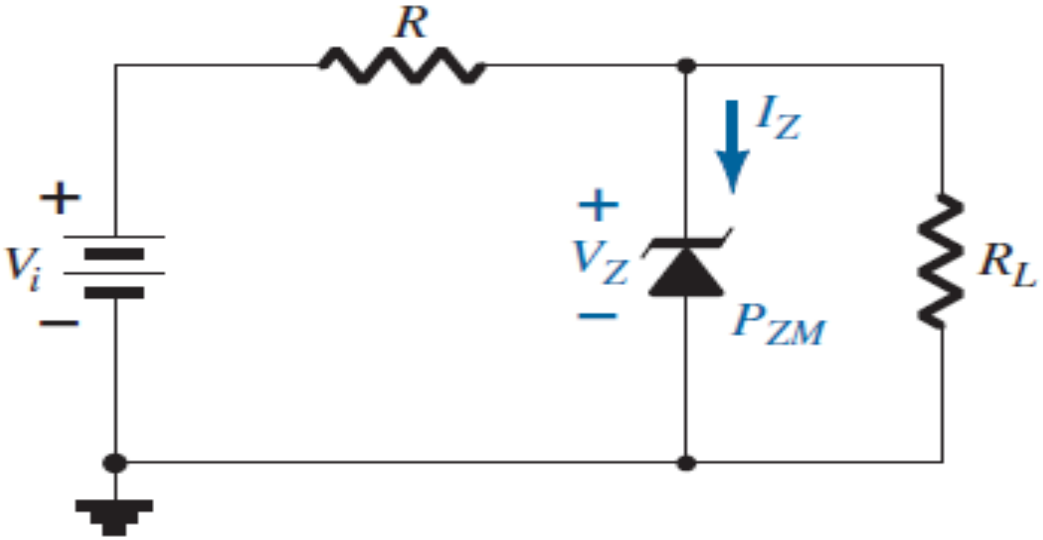

Zener Diode As Voltage Regulator

The analysis can be done in two steps:

1. Determine the state of the Zener diode by removing it from the network and calculating the voltage across the resulting open circuit.

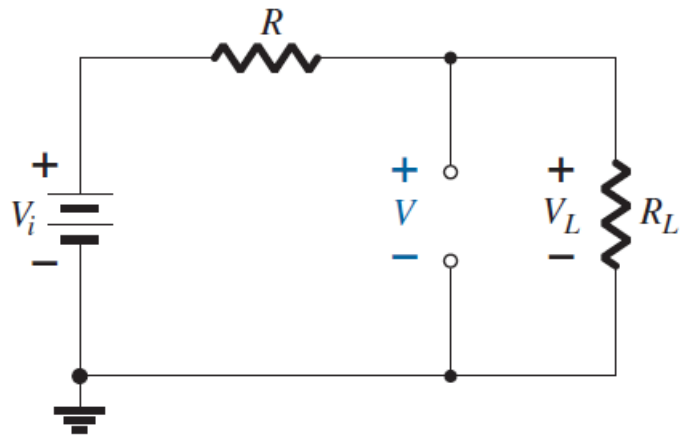

$$V = V_L = \frac{R_L V_i}{R + R_L}$$

If $V \geq V_Z$, the Zener diode is on, and the appropriate equivalent model can be substituted.
If $V < V_Z$, the diode is off, and the open-circuit equivalence is substituted.

Zener Diode As Voltage Regulator

The analysis can be done in two steps:

2. Substitute the appropriate equivalent circuit and solve for the desired unknowns.

For "on" state will result in the equivalent network is

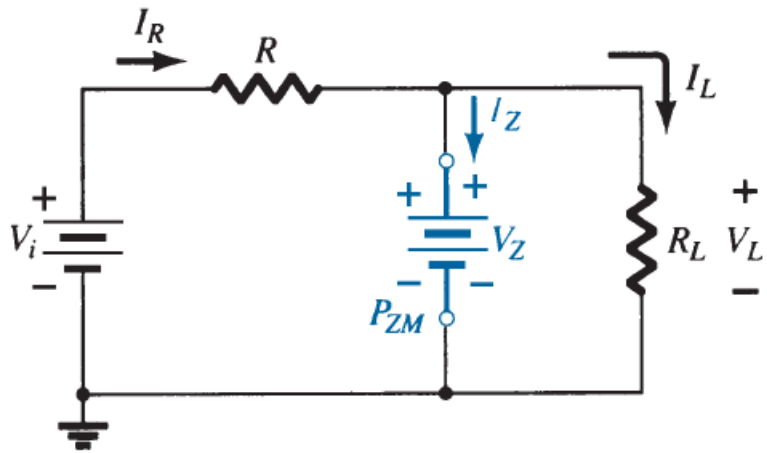

$$V_L = V_Z$$

The Zener diode current must be determined by an application of Kirchhoff's current law. That is,

$$I_R = I_Z + I_L$$

Zener Diode As Voltage Regulator

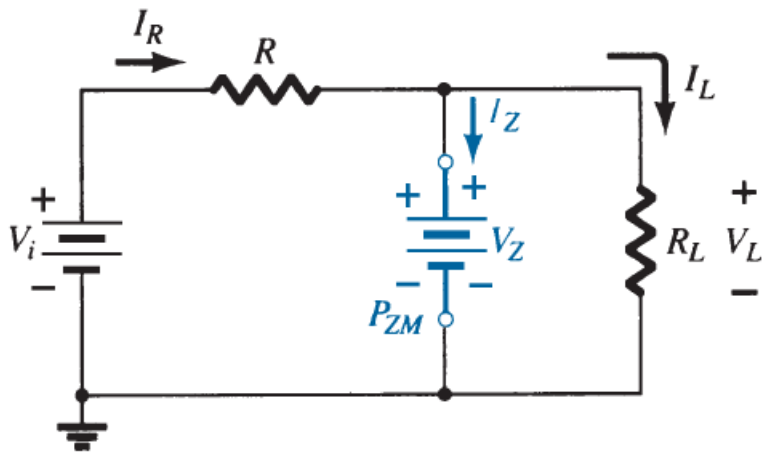

$$I_Z = I_R - I_L$$

$$I_L = \frac{V_L}{R_L} \quad \text{and} \quad I_R = \frac{V_R}{R} = \frac{V_i - V_L}{R}$$

The power dissipated by the Zener diode is determined by

$$P_Z = V_Z I_Z$$

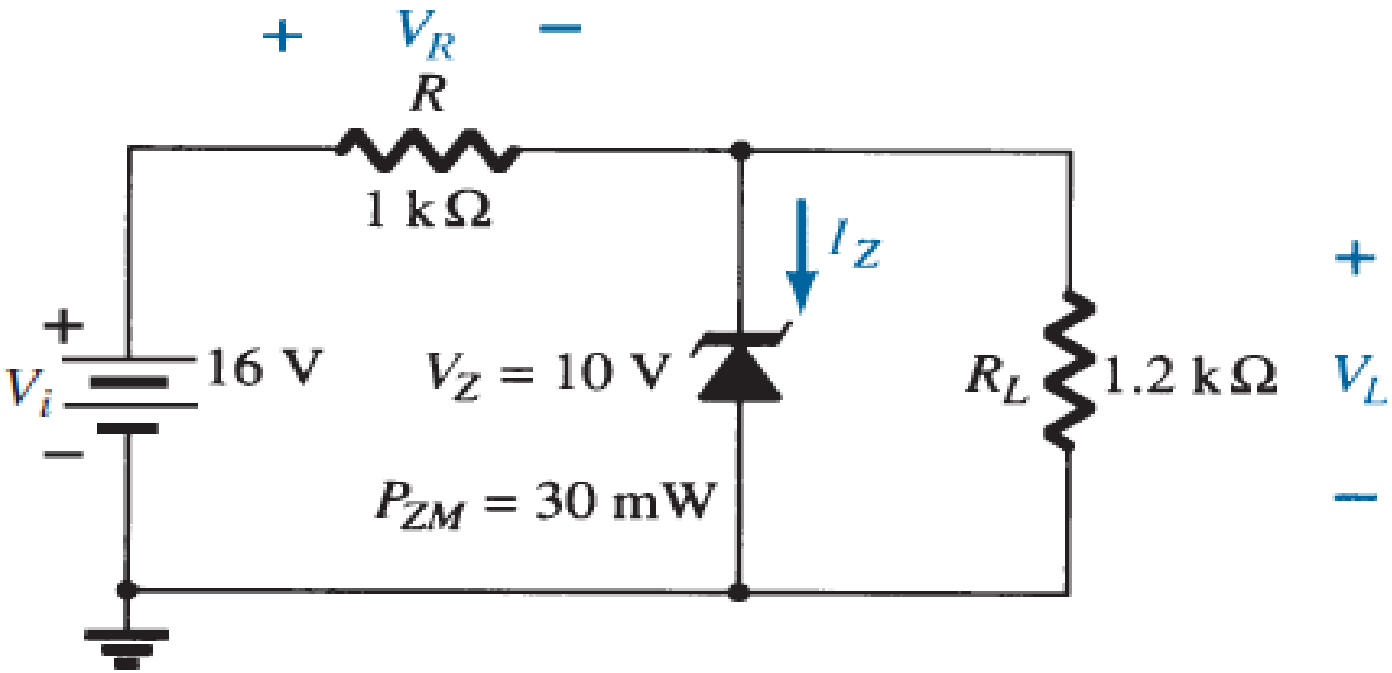
+
V_R
−
R
1 kΩ
I_Z
+
V_i
16 V
−
V_Z = 10 V
P_{ZM} = 30 mW
R_L
1.2 kΩ
+
V_L
−

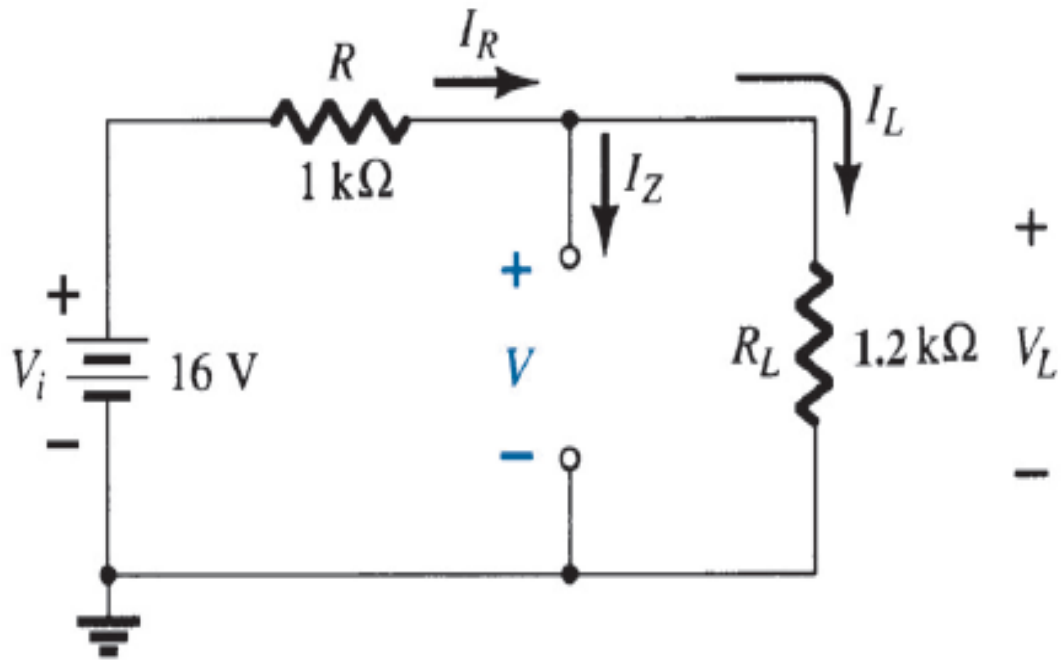
R
I_R
1 kΩ
I_Z
I_L
+
V_i
16 V
−
+
V
−
R_L
1.2 kΩ
+
V_L
−

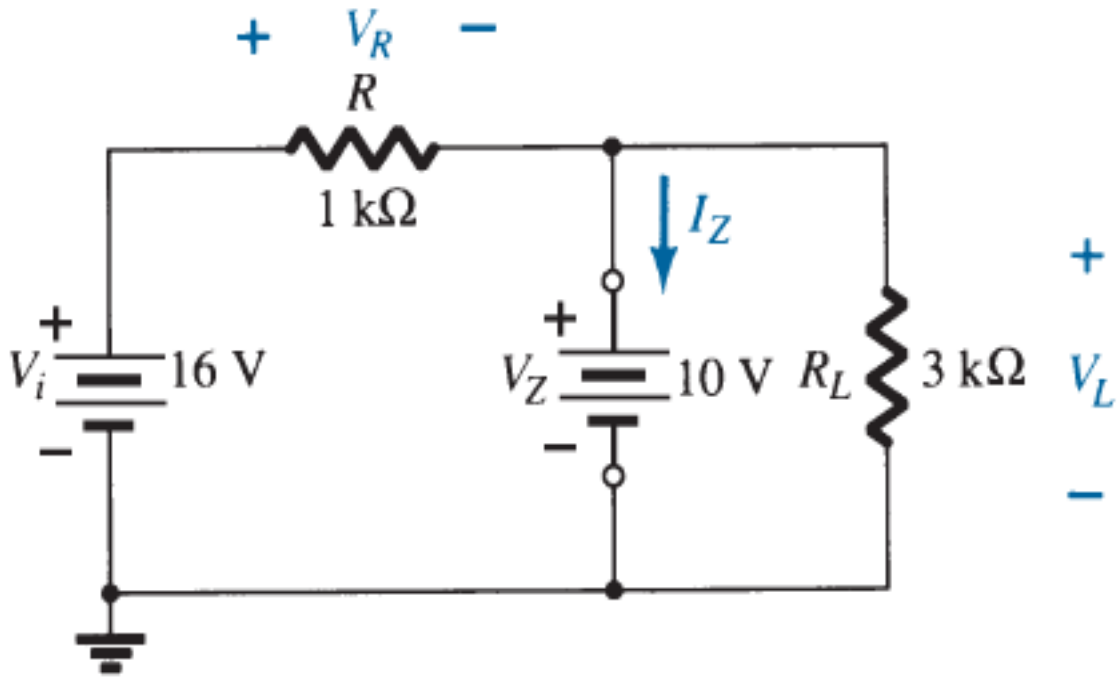
+ V_R −
R
1 kΩ
I_Z
+
V_i
16 V
−
+
V_Z
10 V
−
R_L
3 kΩ
+
V_L
−

RECTIFIERS

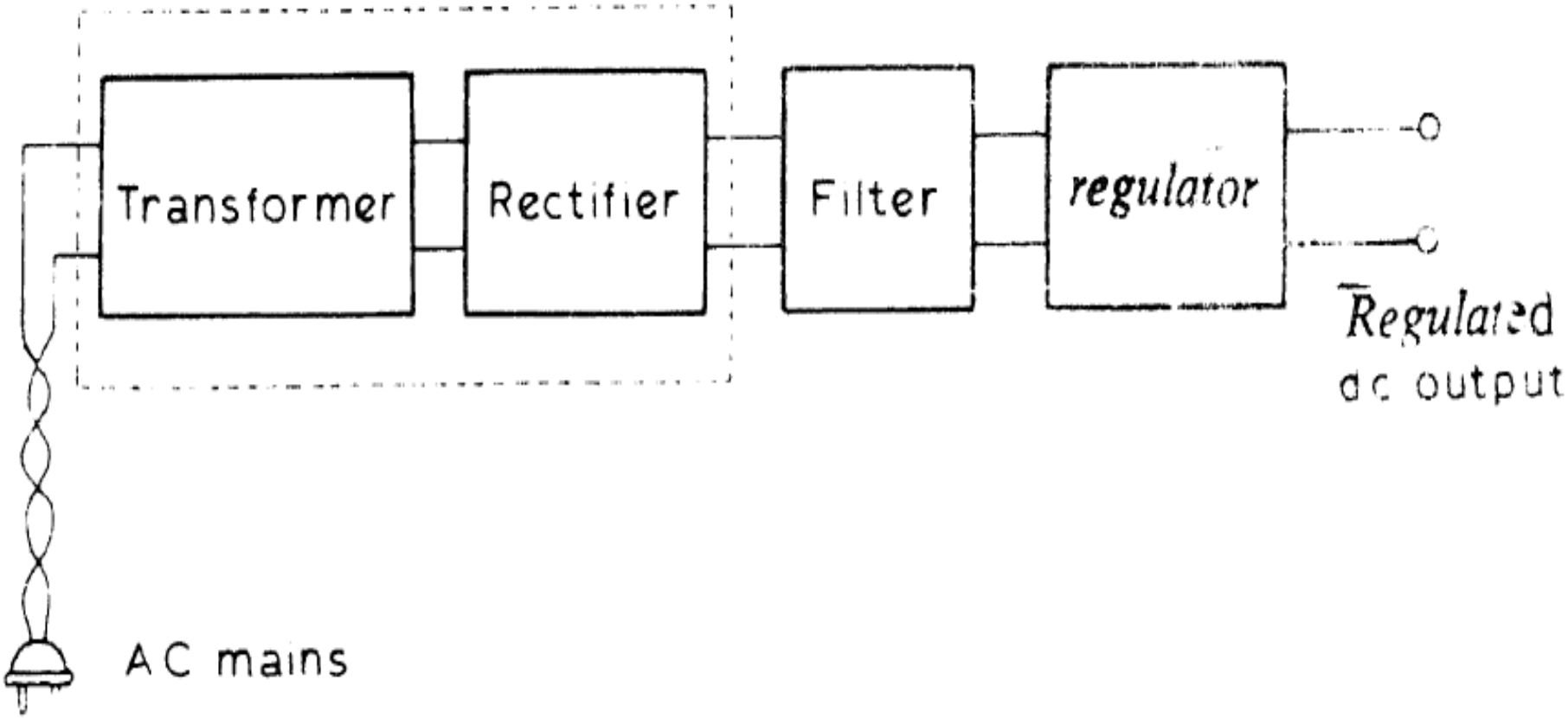
Transformer
Rectifier
Filter
regulator
Regulated
dc output
AC mains

Half-wave rectifier

Full-wave rectifier

Half-wave rectifier

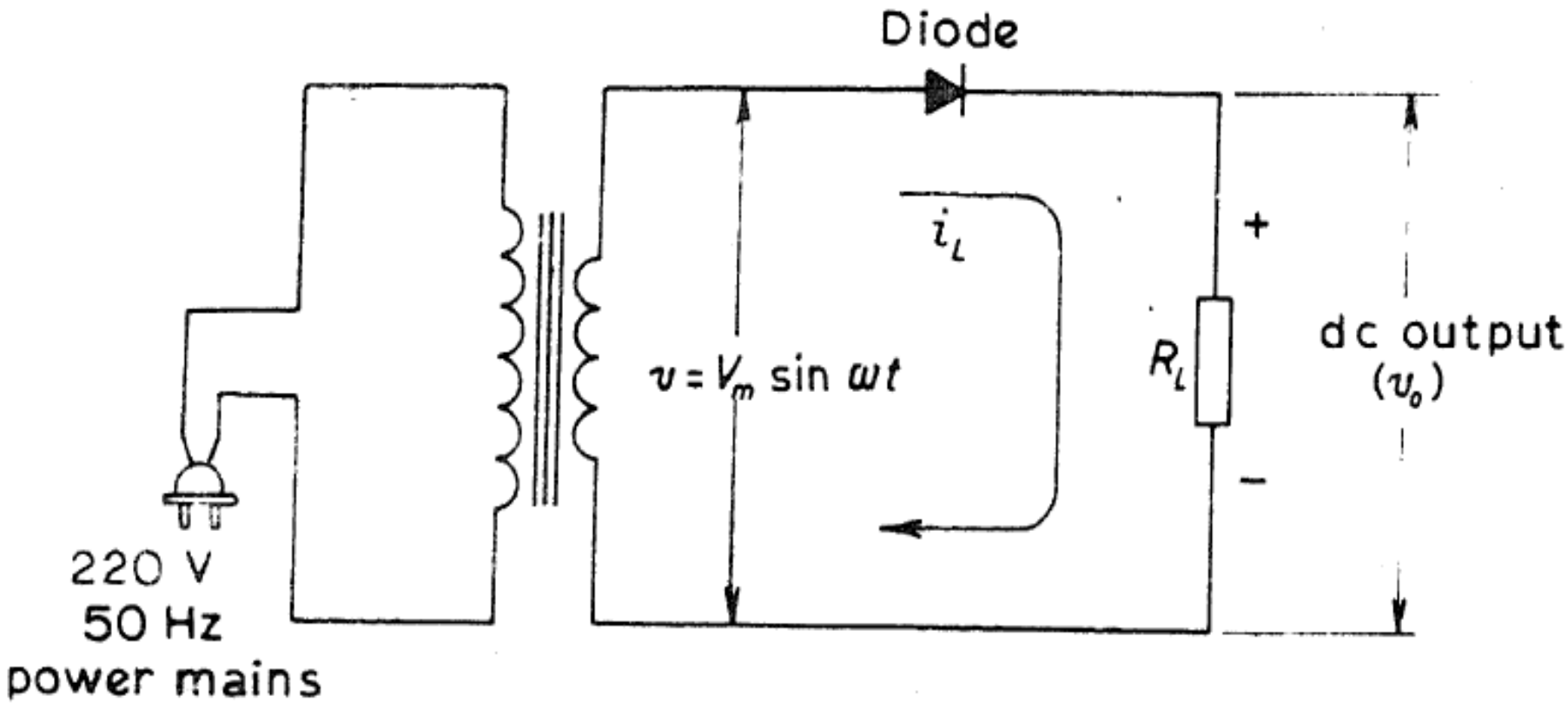

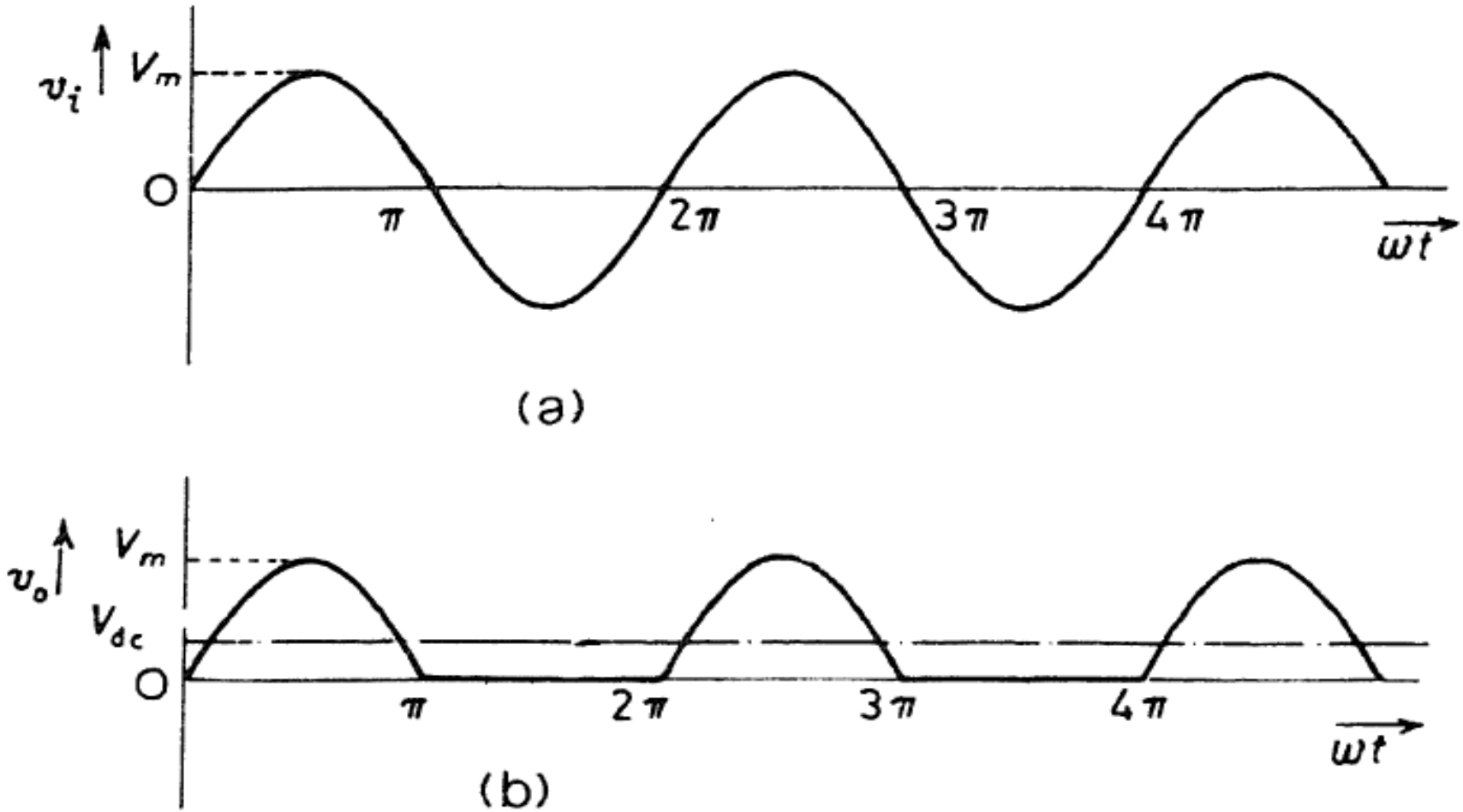

Half-wave rectifier: (*a*) Input voltage waveform
(*b*) Output voltage waveform

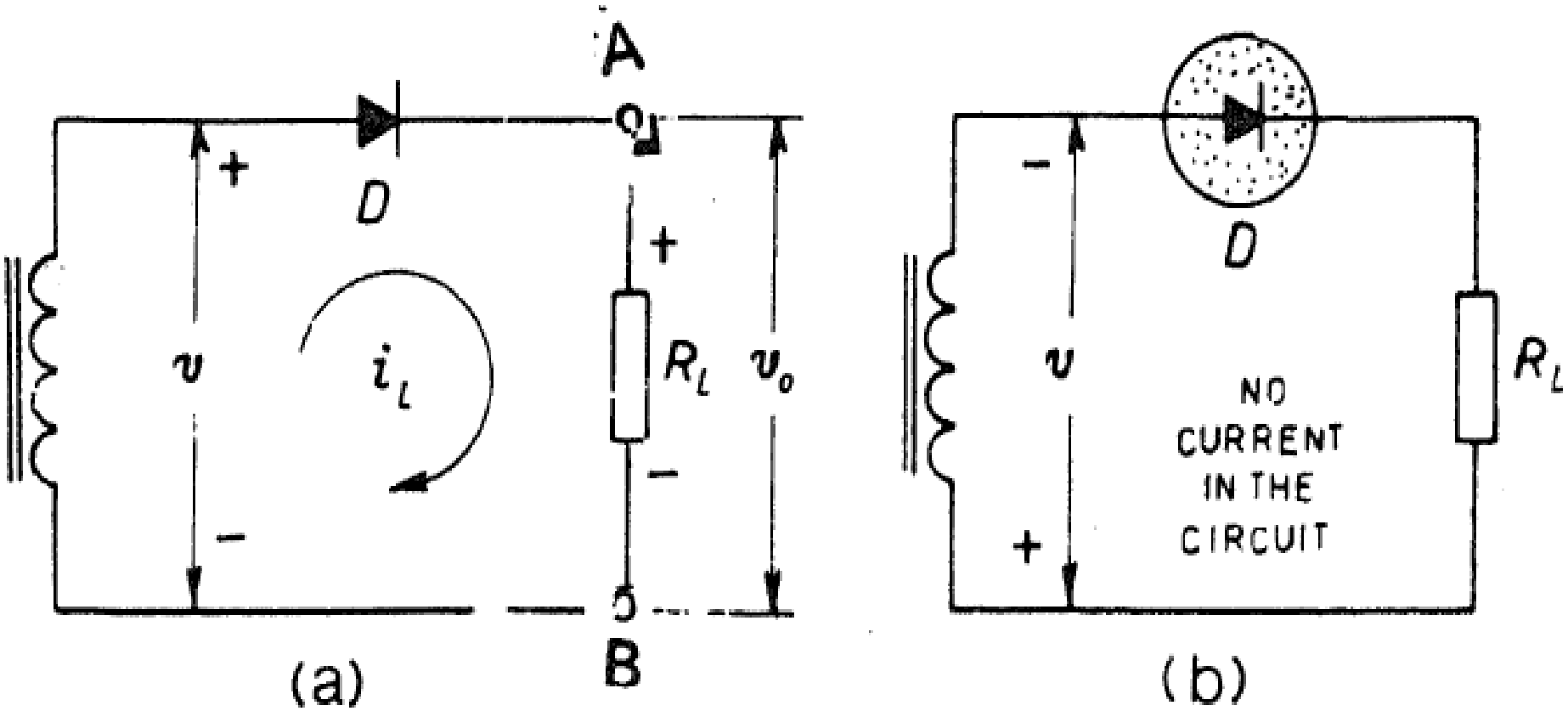

Half-wave rectifier circuit: (*a*) During positive half-cycle; (*b*) During negative half-cycle

Peak Inverse Voltage

Output dc Voltage

RMS Voltage

Ripple factor

Rectification efficiency

Full-wave rectifier

- ✓ Centre- Tap rectifier
- ✓ Bridge rectifier

Centre- Tap rectifier

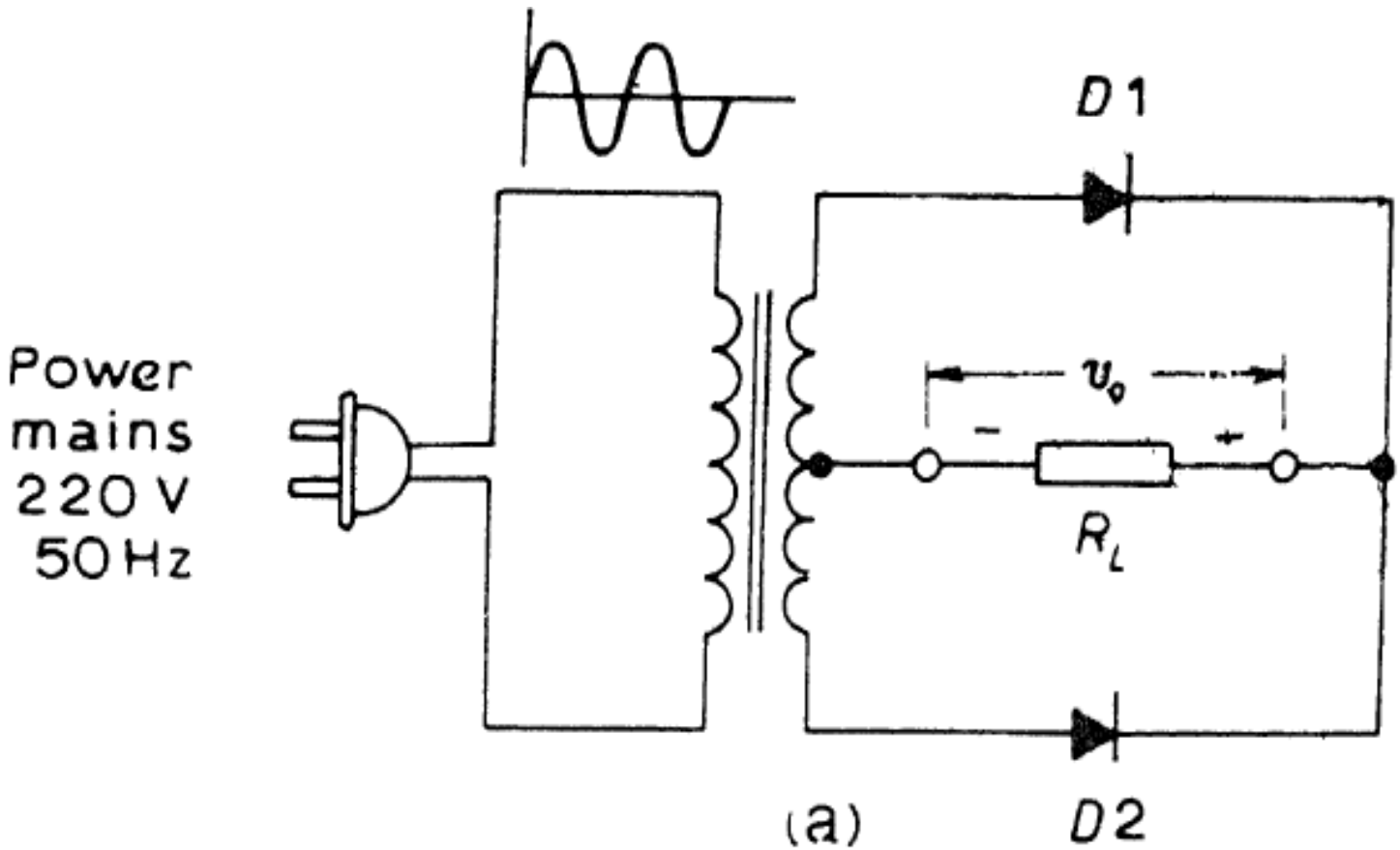

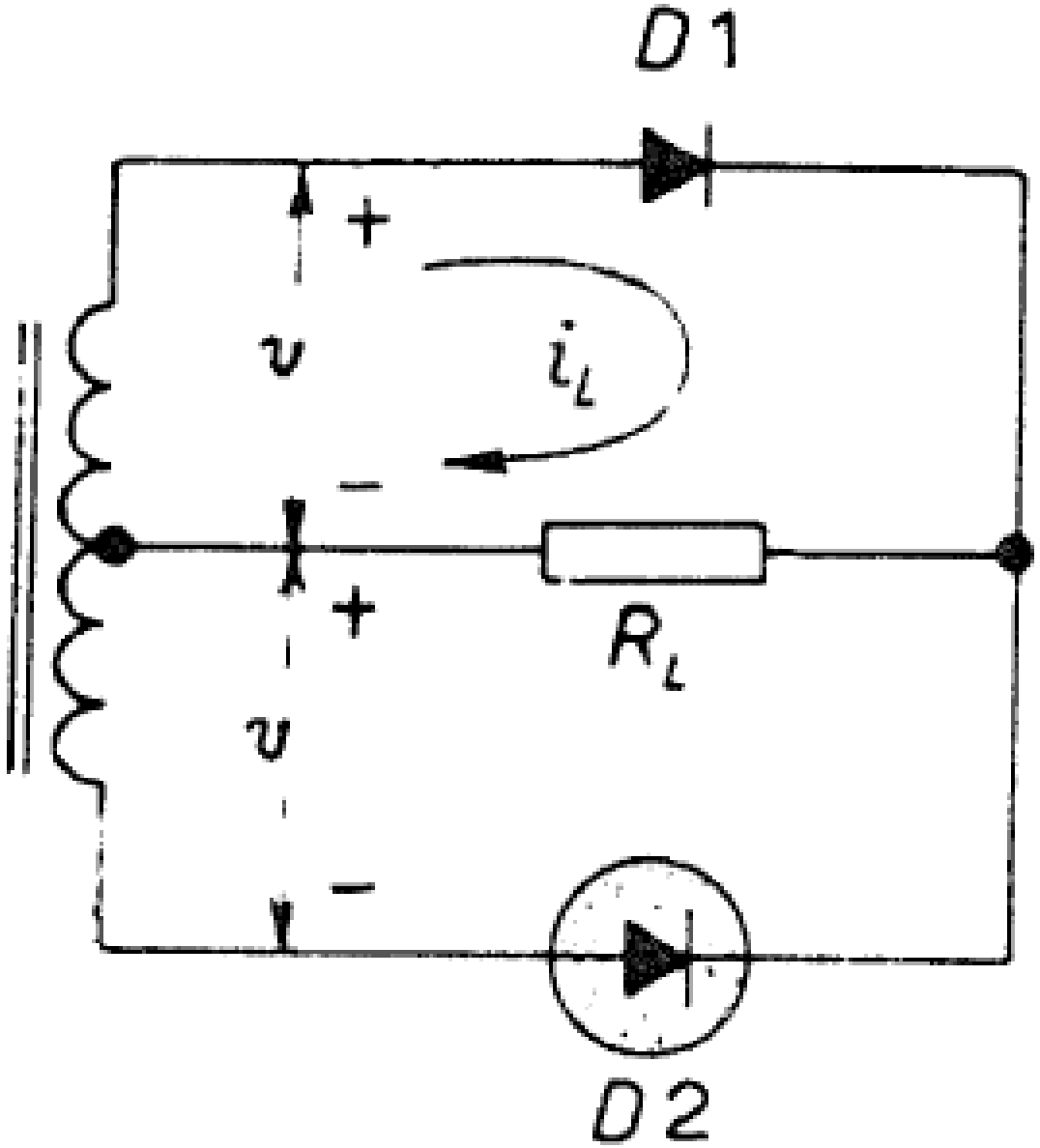
D1
+
v
i_L
−
+
R_L
v
−
D2

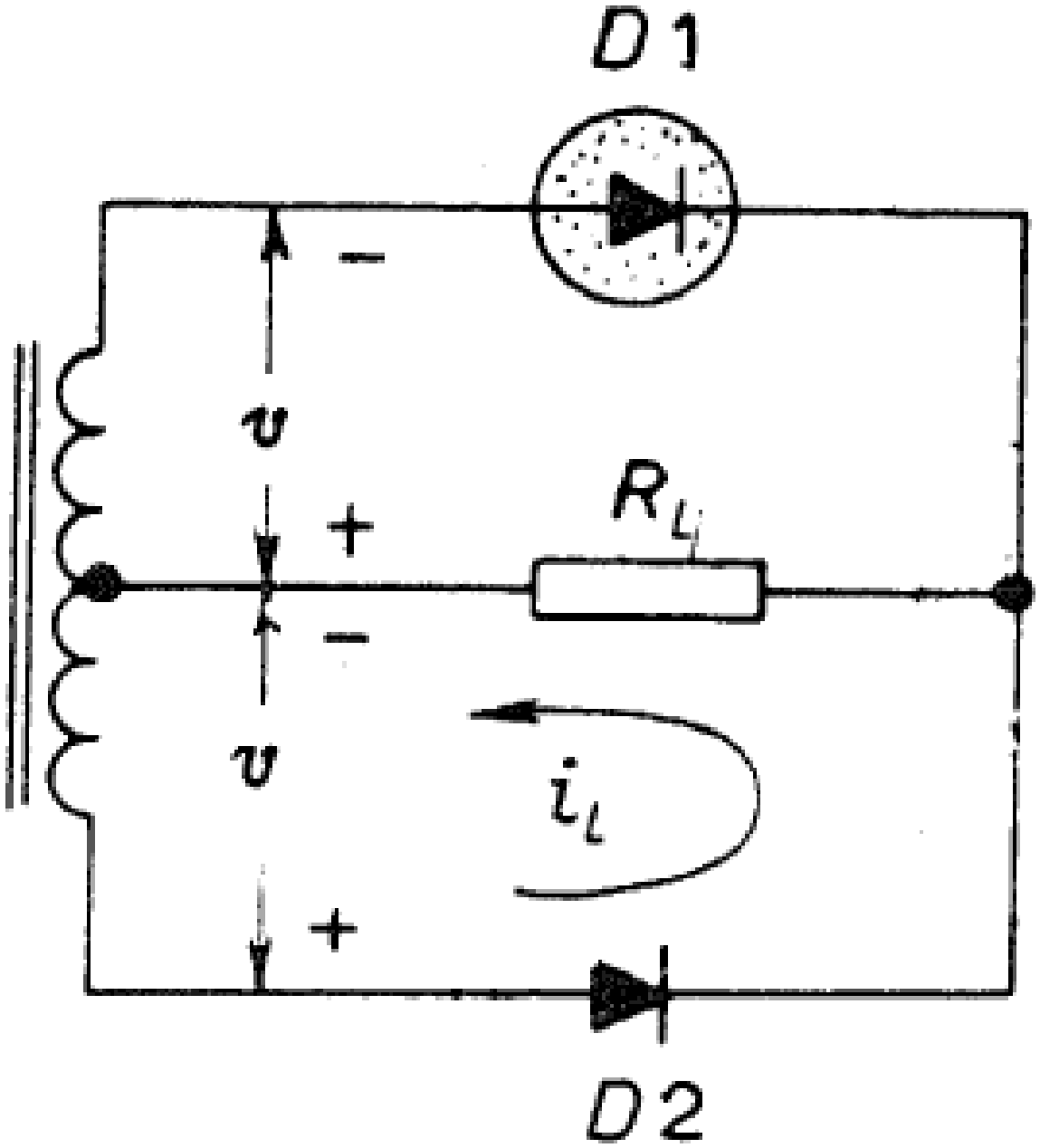
D1
−
v
+
R_L
−
v
i_L
+
D2

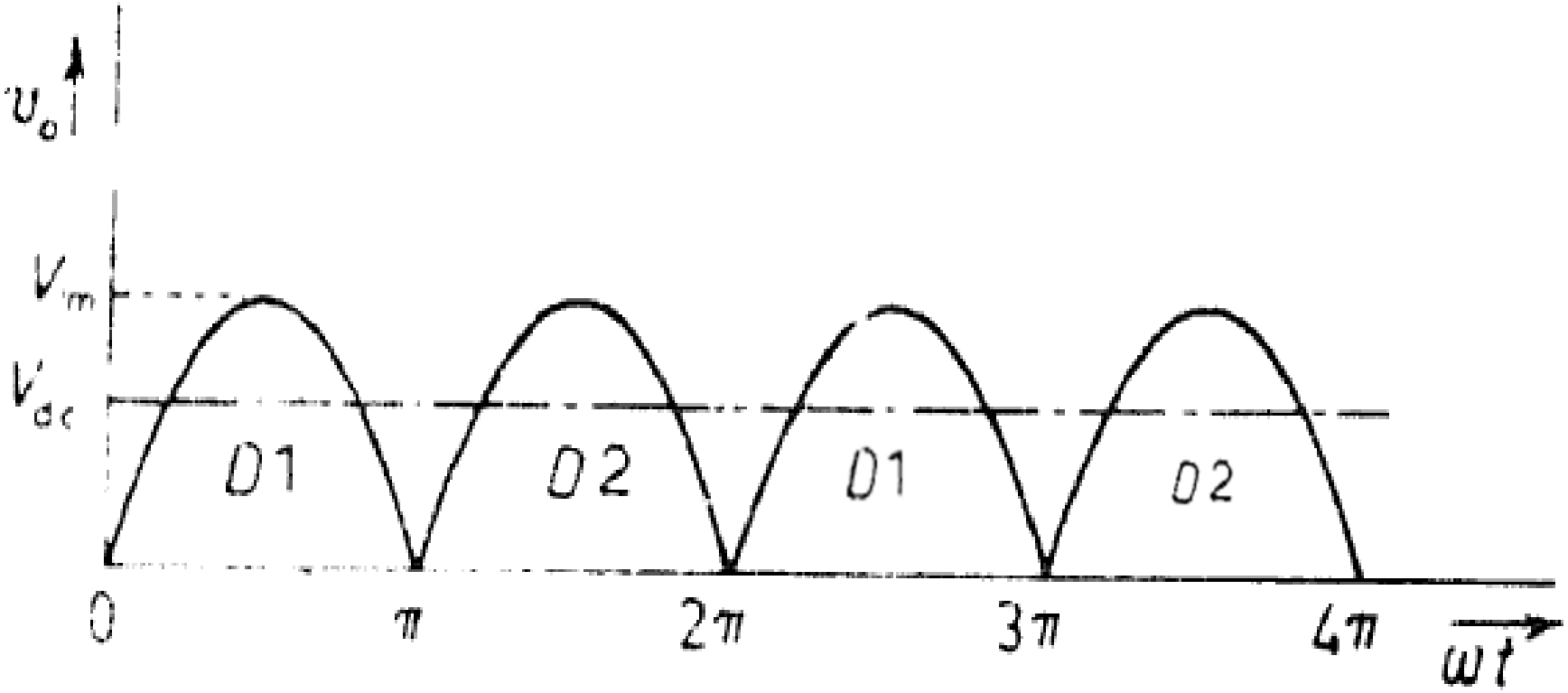
v_o
V_m
V_{dc}
D1
D2
D1
D2
0
π
2π
3π
4π
ωt

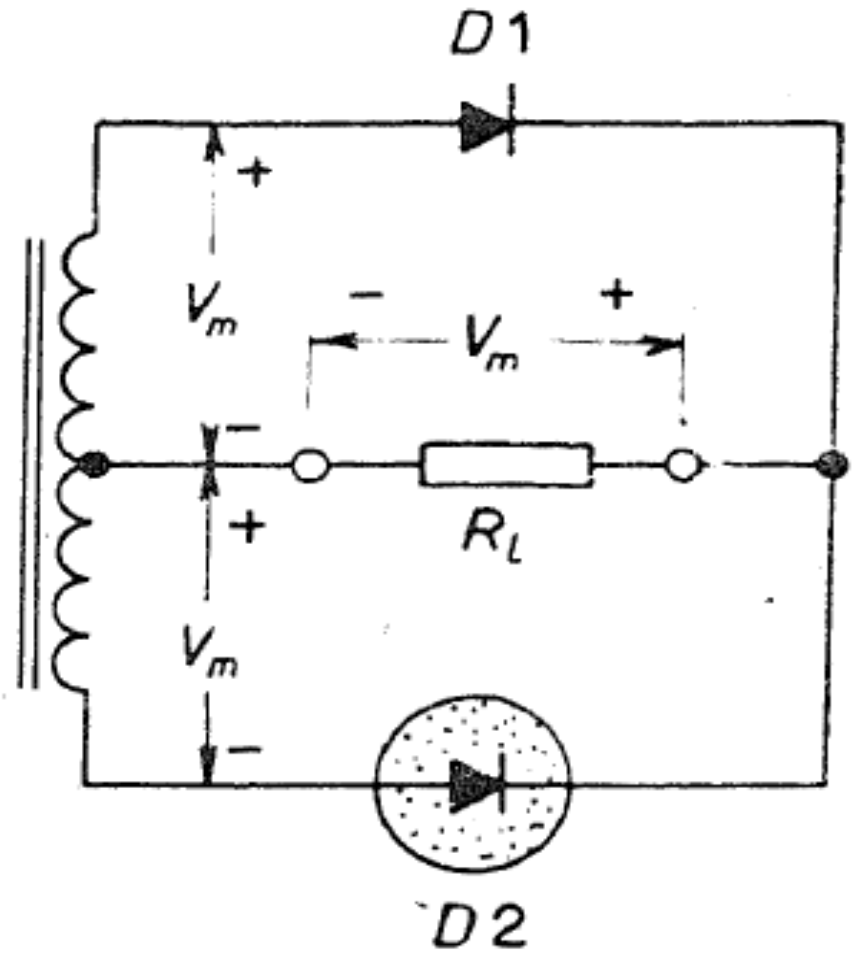

The PIV across the non-conducting diode $D2$ in a centre-tap rectifier is $2V_m$

Bridge rectifier

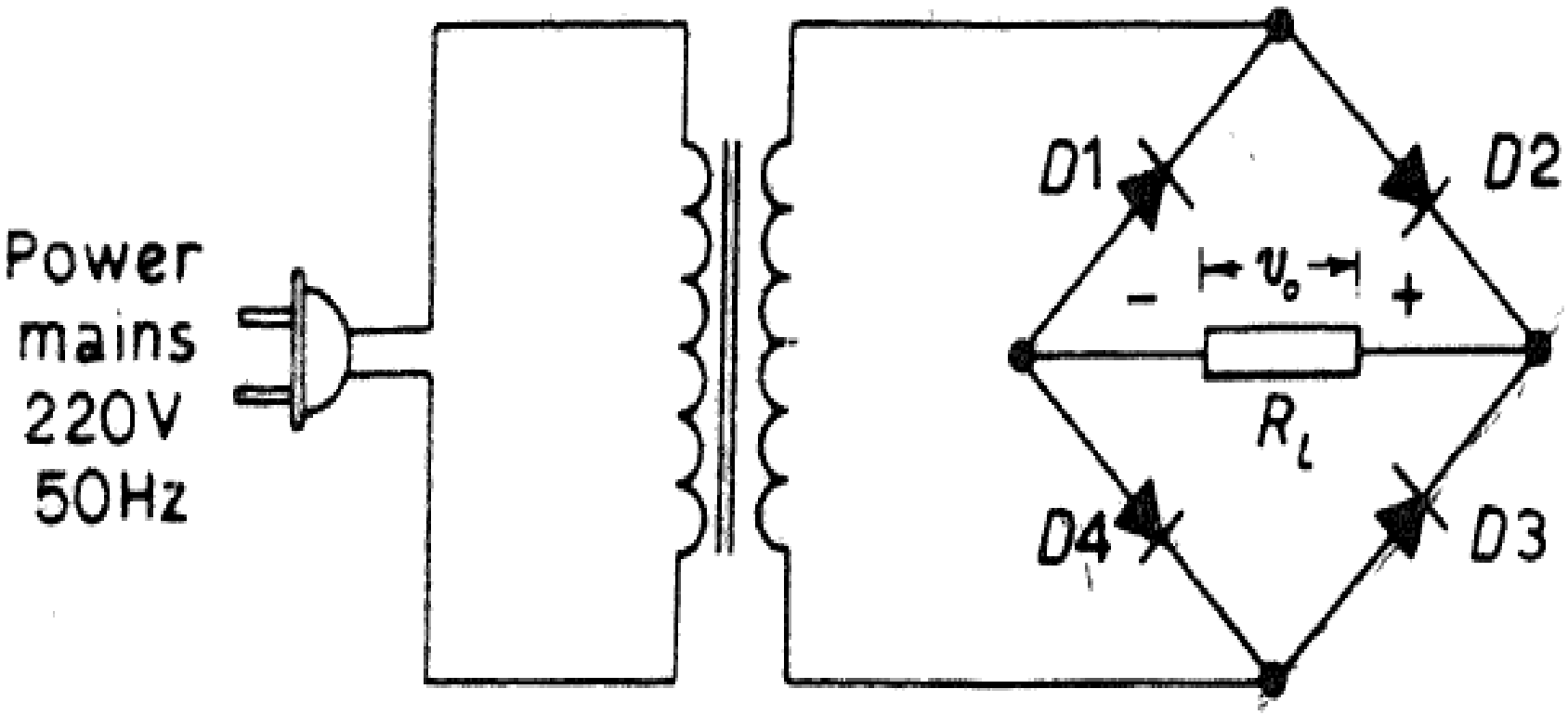

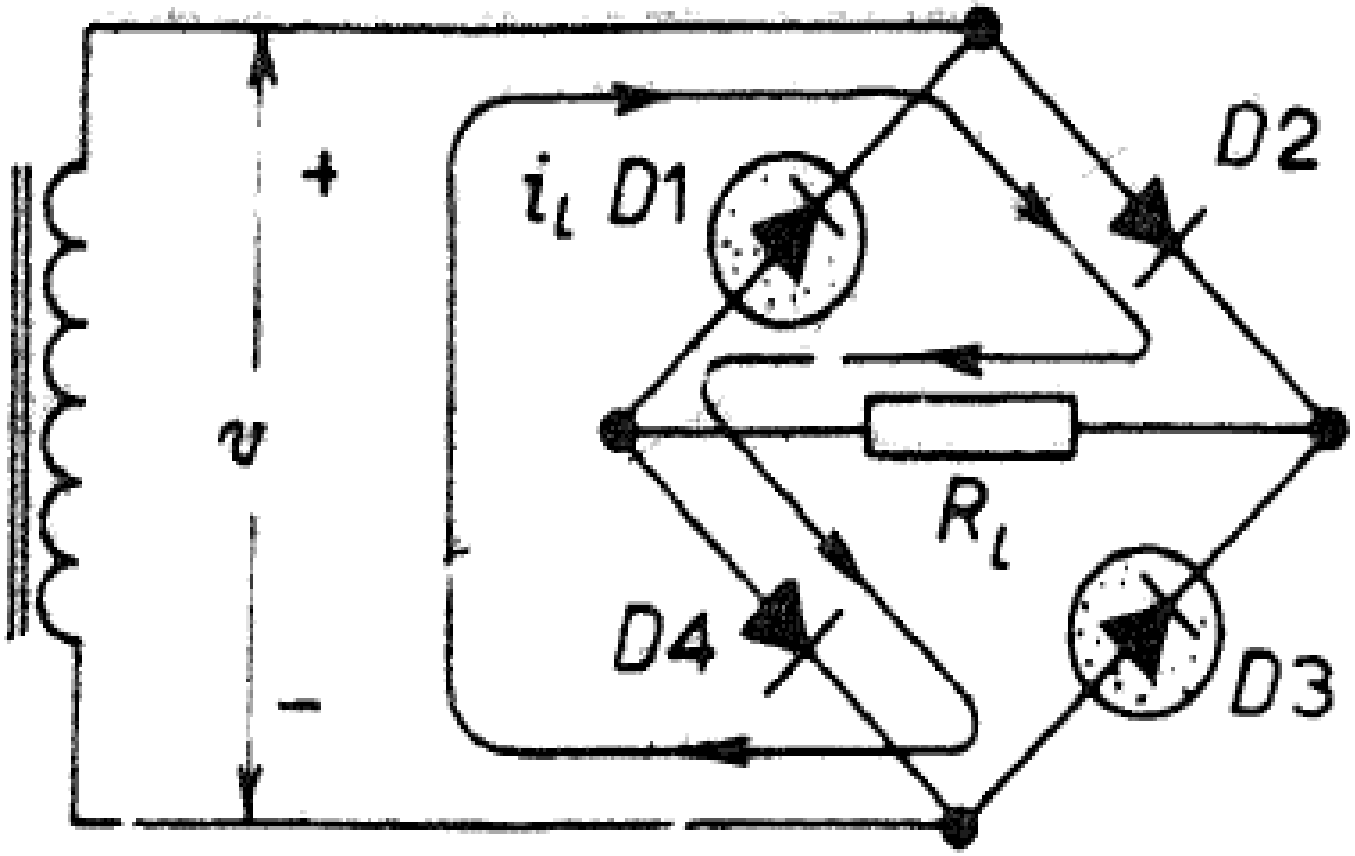
+
v
−
i_L D1
D2
R_L
D4
D3

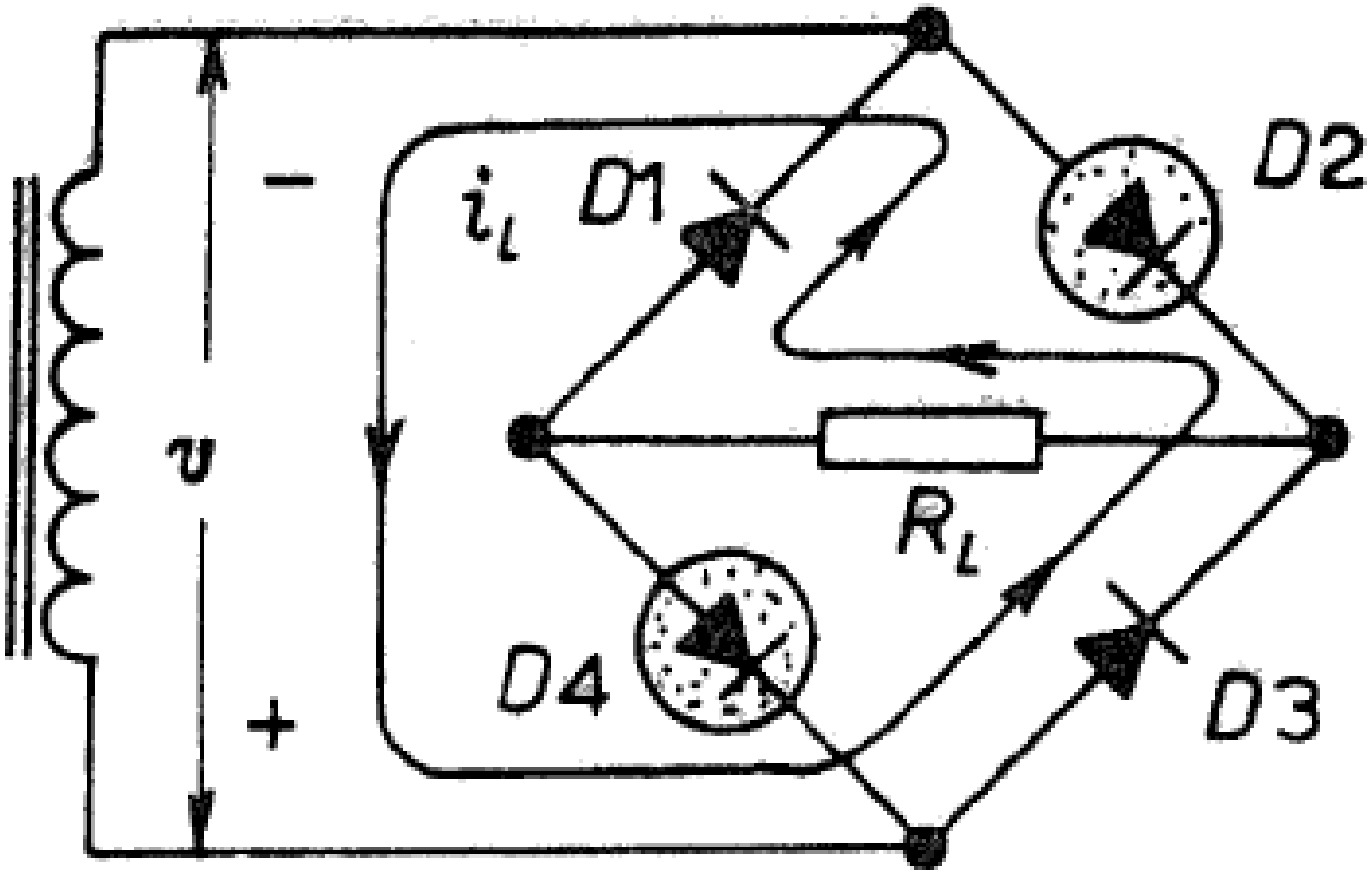
−
+
v
i_L
D1
D2
D3
D4
R_L

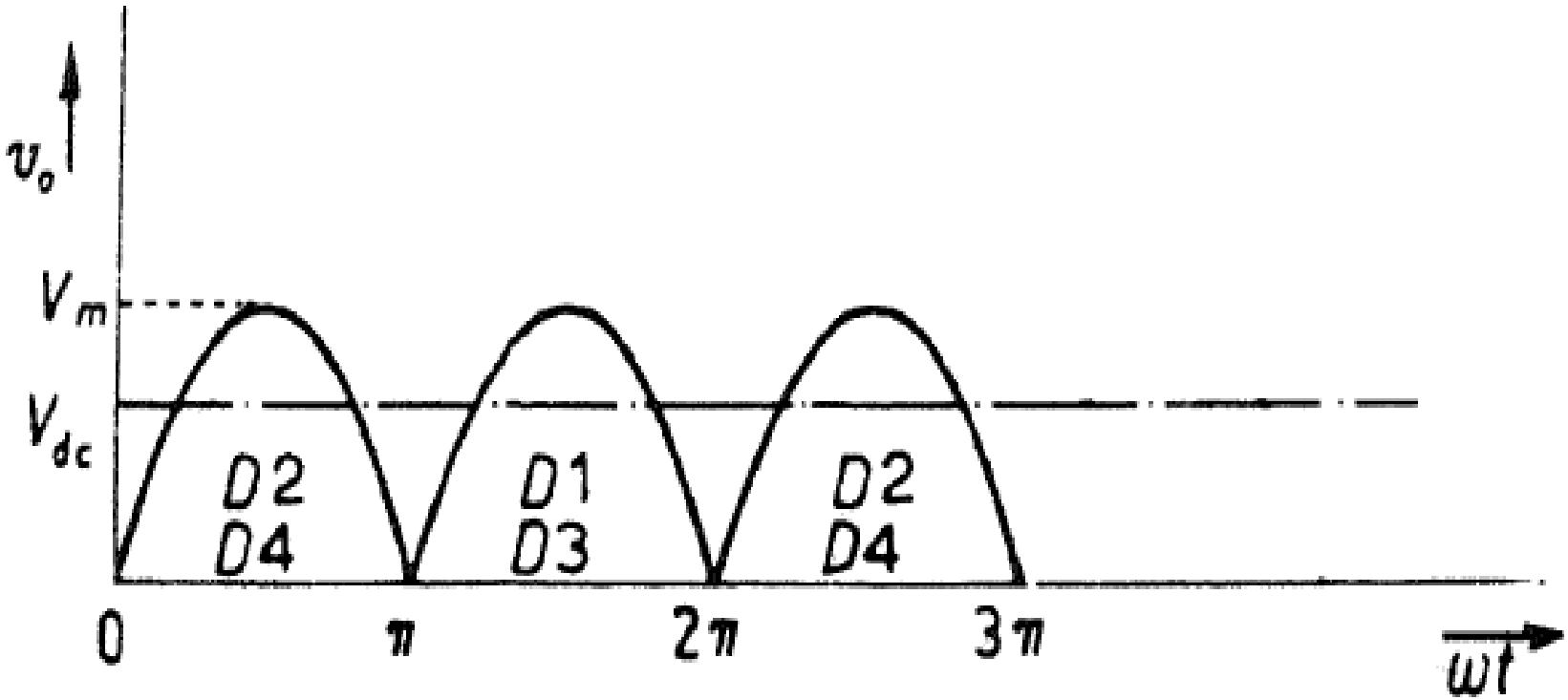
v_o
V_m
V_{dc}
D2
D4
D1
D3
D2
D4
0
π
2π
3π
ωt

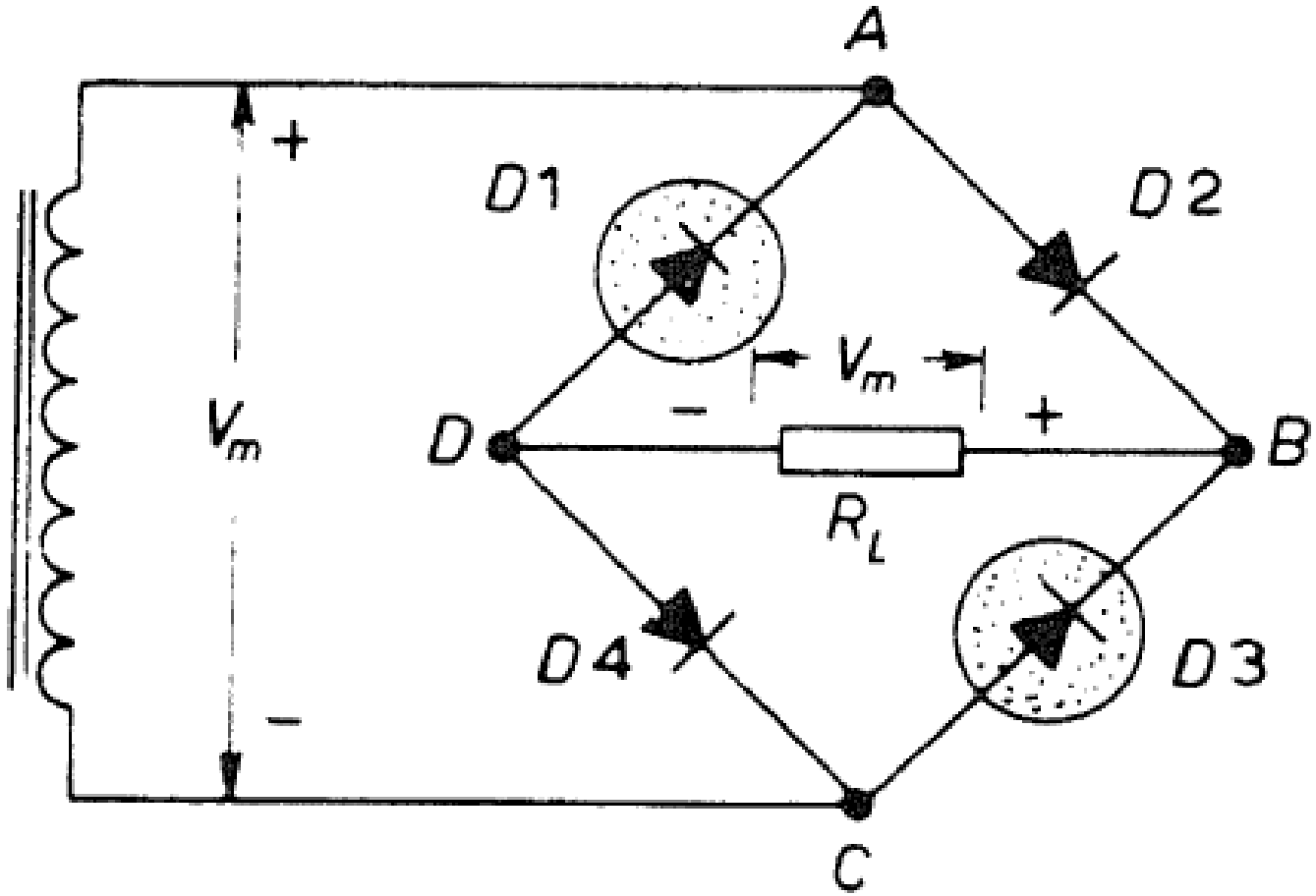

The PIV across the nonconducting diode $D1$ or $D3$ is V_m

Example The turns ratio of the transformer used in a bridge rectifier is $n_1 : n_2 = 12 : 1$. The primary is connected to 220 V, 50 Hz power mains. Assuming that the diode voltage drops to be zero, find the dc voltage accross the load. What is the PIV of each diode ? If the same dc voltage is obtained by using a centre-tap rectifier, what is the PIV ?

Example In a centre-tap full-wave rectifier, the load resistance $R_L = 1\ k\Omega$. Each diode has a forward-bias dynamic resistance r_d of $10\ \Omega$. The voltage across half the secondary winding is $220 \sin 314t$. Find (*a*) the peak value of current, (*b*) the dc or average value of current, (*c*) the rms value of current, (*d*) the ripple factor, and (*e*) the rectification efficiency.

Bipolar Junction transistors

- ✓ Emitter
- ✓ Base
- ✓ Collector

Junctions

- ✓ Emitter-base junction
- ✓ Collector-base junction

Bipolar Junction transistors

Construction

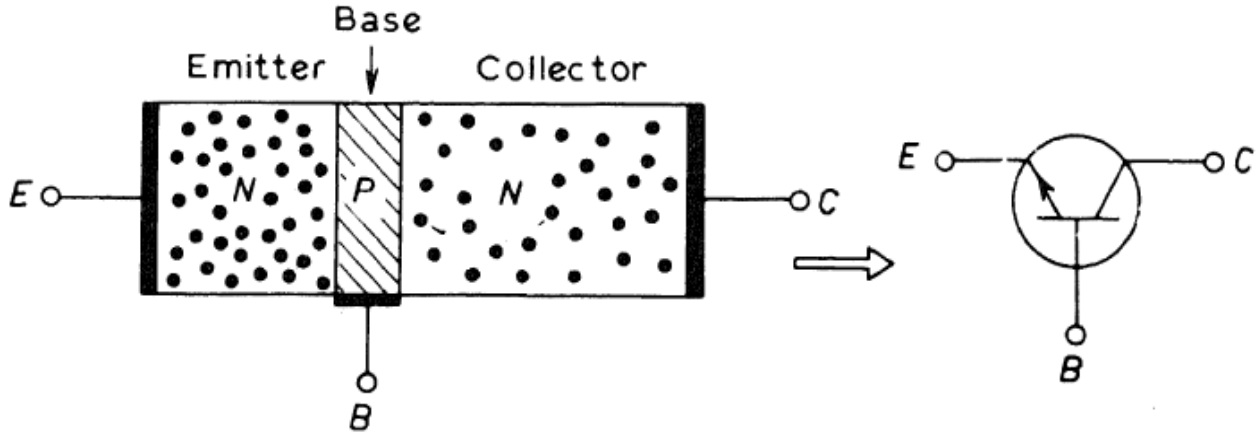

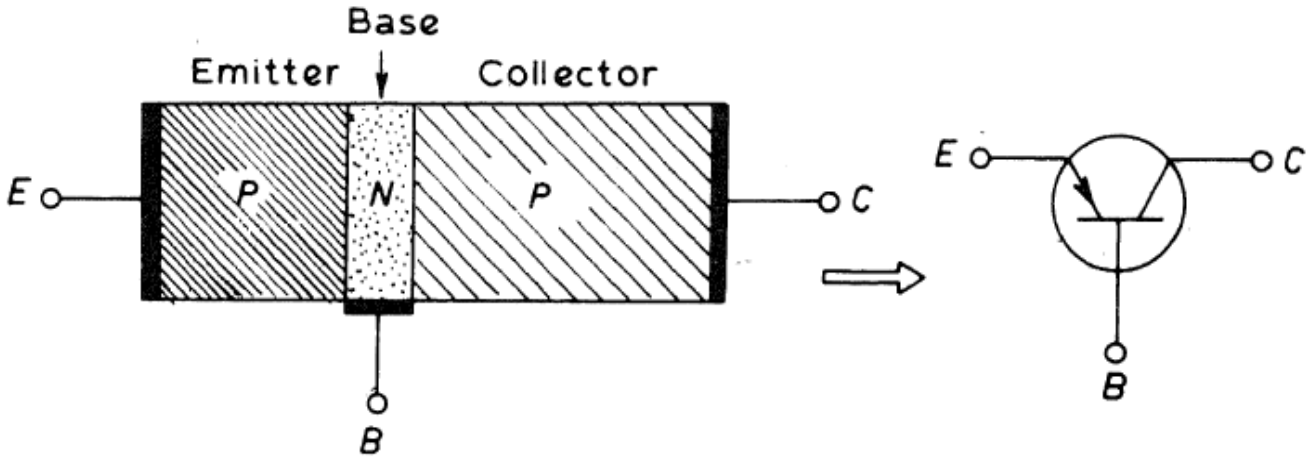

Bipolar Junction transistors

Working

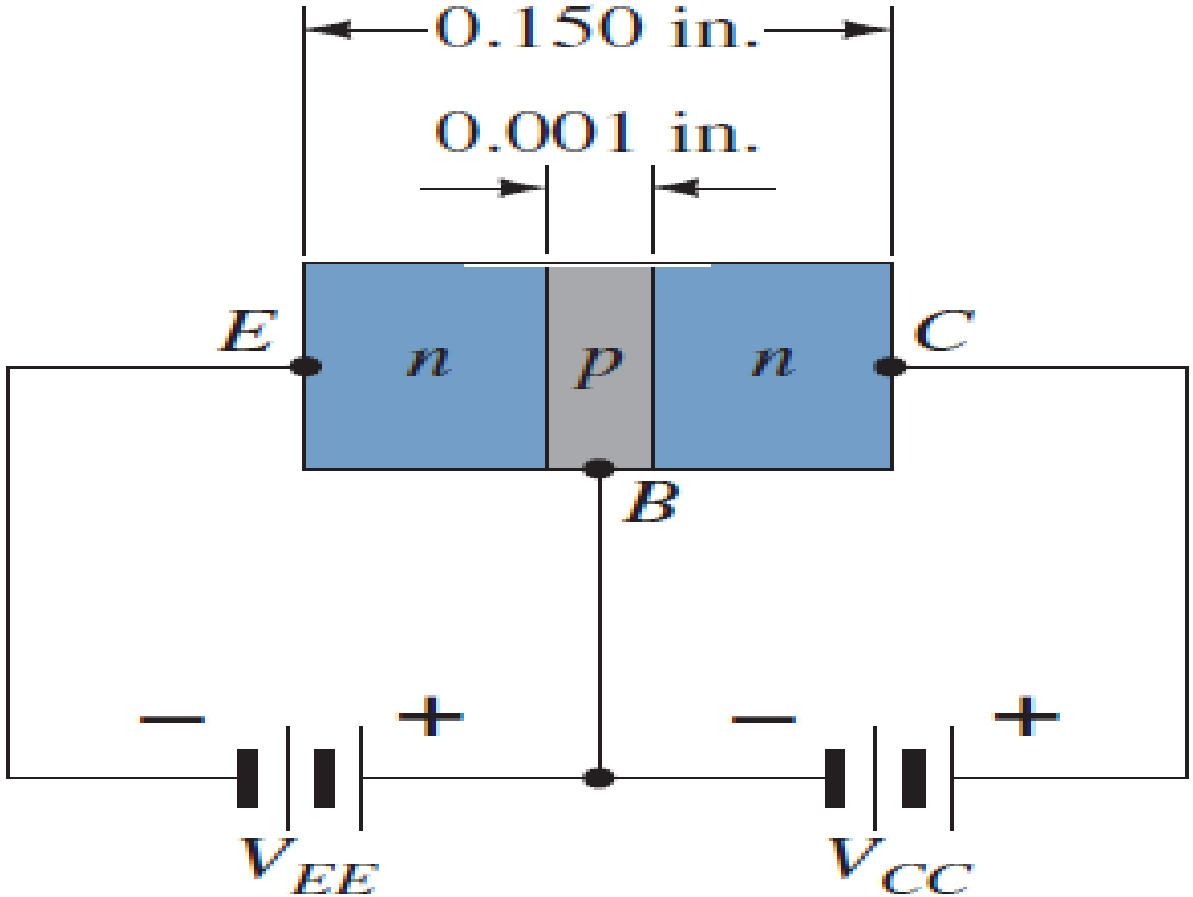

Bipolar Junction transistors

Working

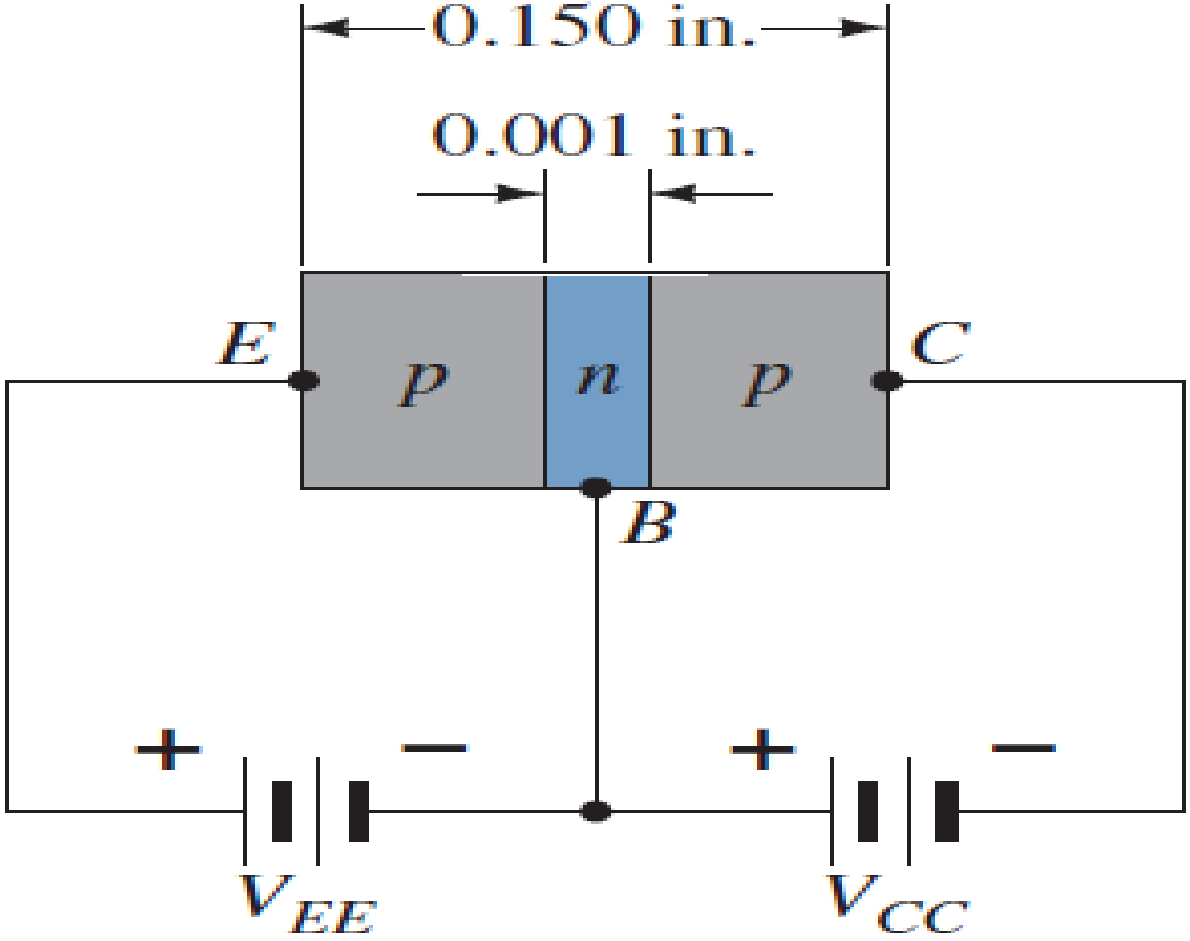

Bipolar Junction transistors

Working

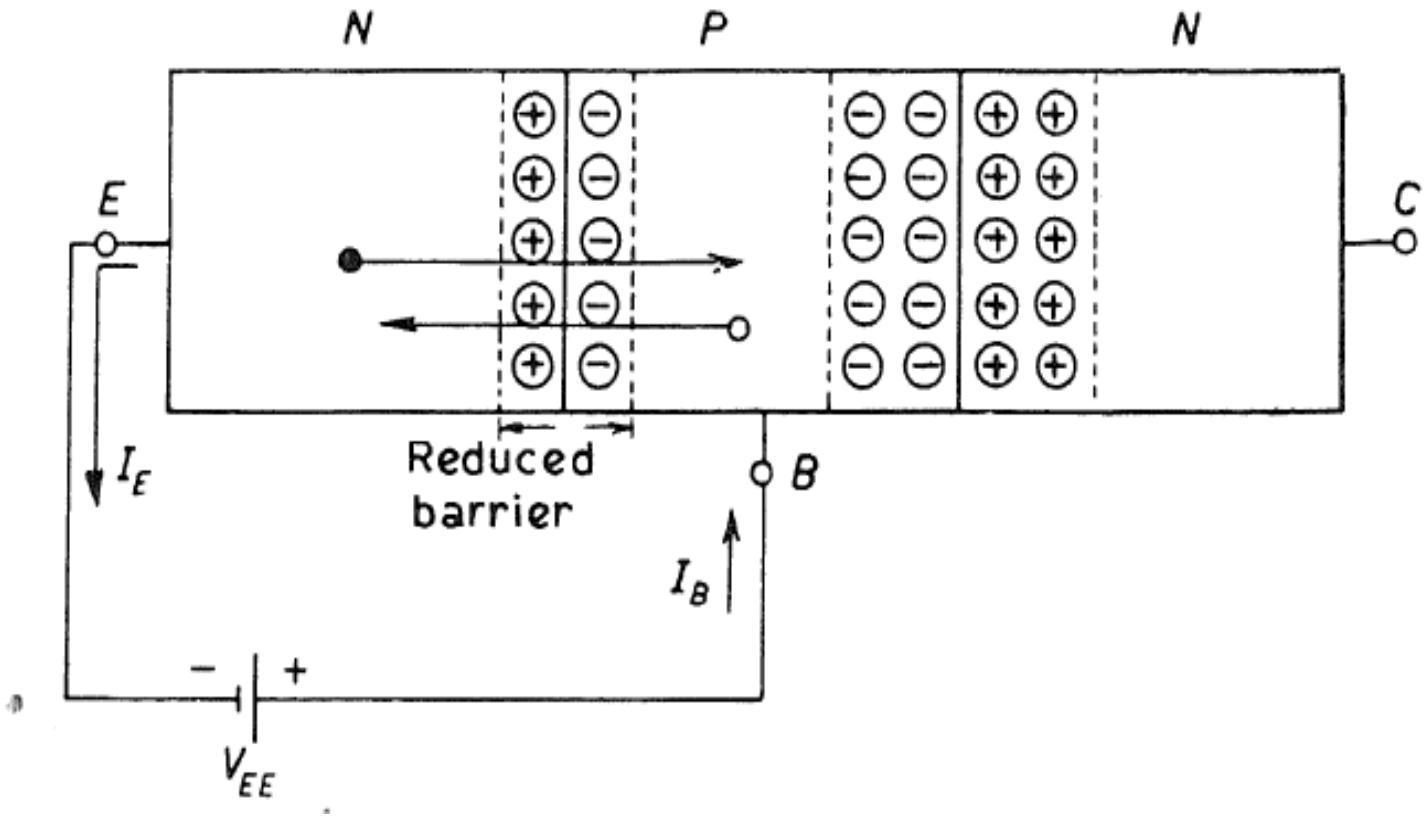

Bipolar Junction transistors

Working

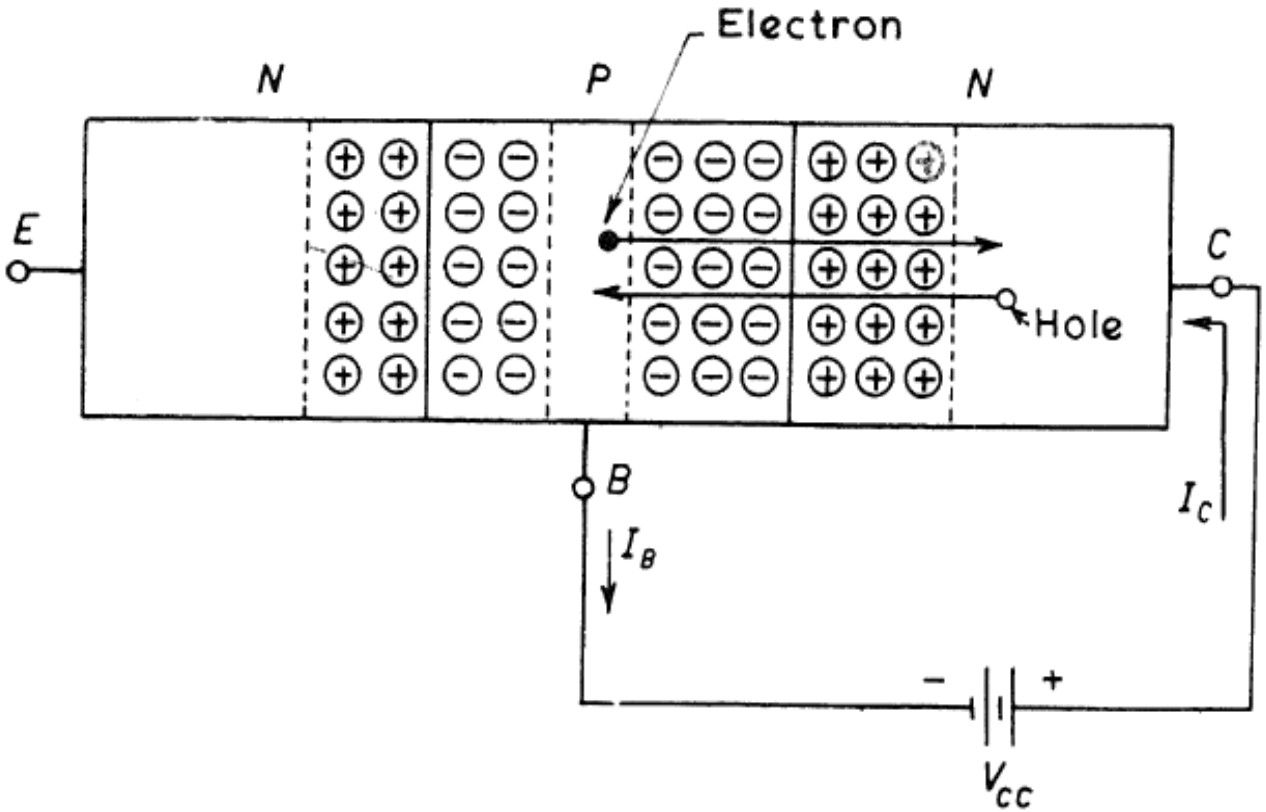

Bipolar Junction transistors

Working

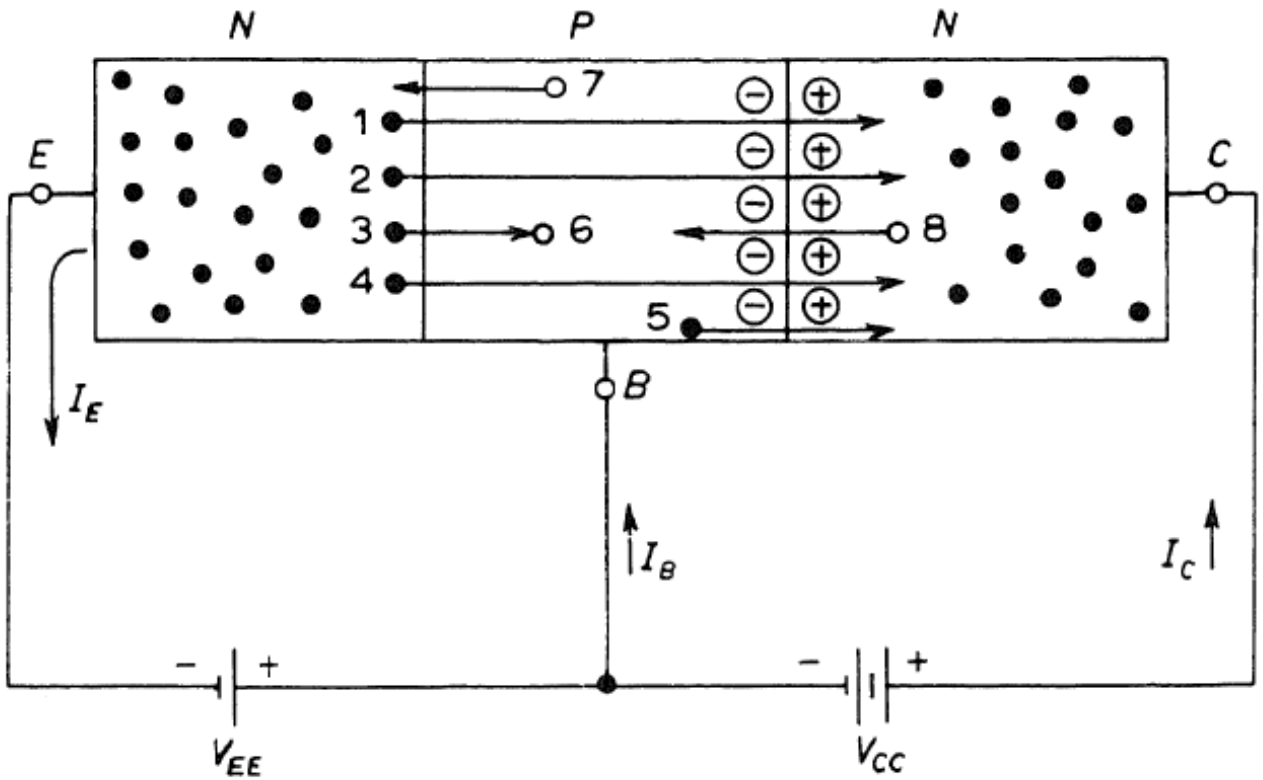

Bipolar Junction transistors

Working

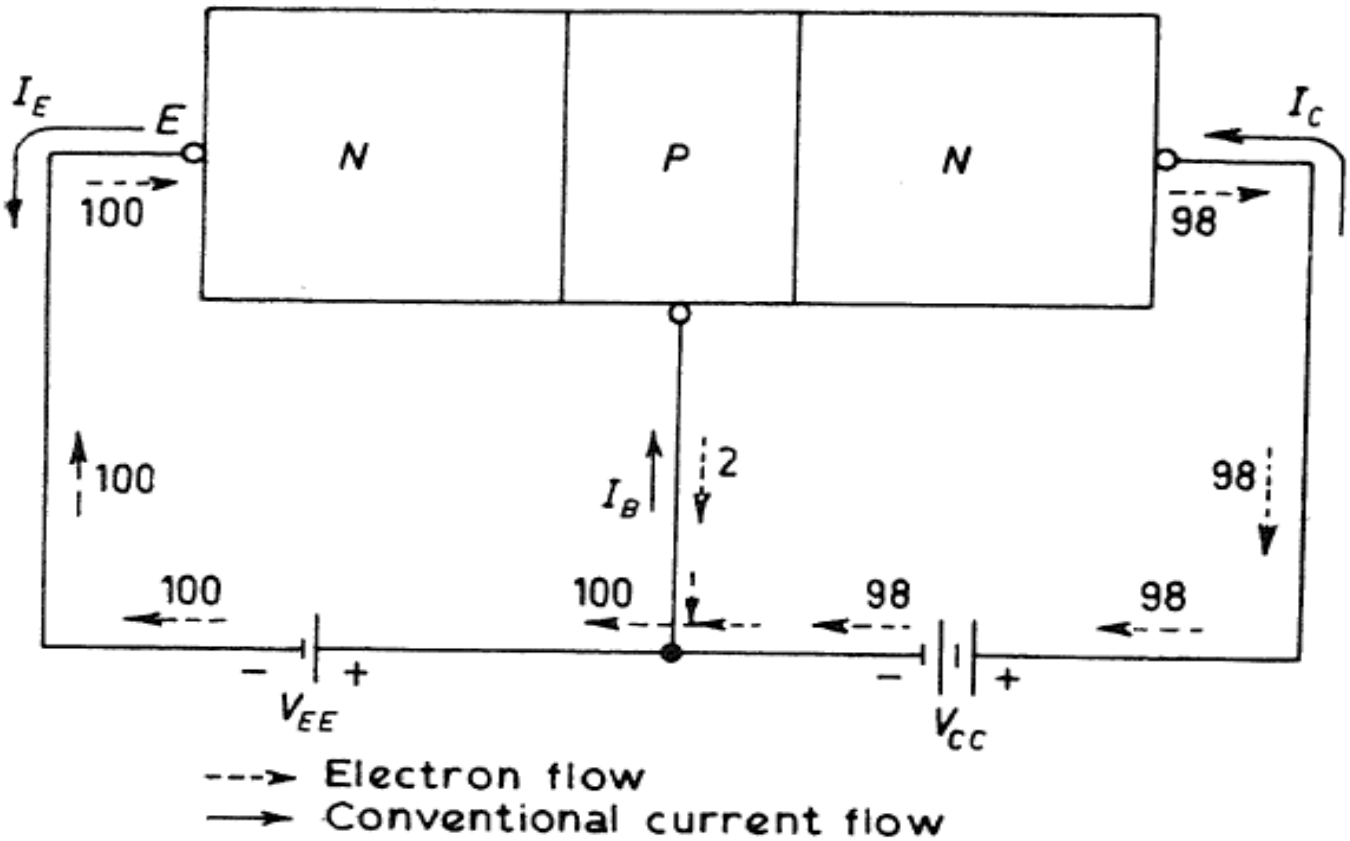

Bipolar Junction transistors

Working

The ratio of the collector current to the emitter current of a transistor is called α_{dc} which is greater than 0.95. We can express

$$I_E = I_C + I_B$$

$$IC = \alpha_{dc} I_E \text{ neglecting the reverse saturation current}$$

$$I_B = (1 - \alpha_{dc}) I_E$$

Bipolar Junction transistors

Working

$$I_C = \alpha_{dc} I_E = \alpha_{dc}\left(I_C + I_B\right)$$

$$I_C(1-\alpha_{dc}) = \alpha_{dc} I_B$$

$$I_C = \frac{\alpha_{dc}}{1-\alpha_{dc}} I_B$$

$$I_c = \beta_{dc} I_B$$

$$\beta_{dc} = \frac{\alpha_{dc}}{1-\alpha_{dc}}$$

Beta dc (β_{dc}) is called the base to collector current gain. This is the ratio of I_C and I_B. The value of β_{dc} varies from 25 to 200.

An n–p–n transistor has been shown provided with biasing voltage V_{BE} and V_{CB}. Calculate the values of I_C and I_E if α_{dc} is 0.96 and I_B is 80 μA. Also, calculate the value of β_{dc}.

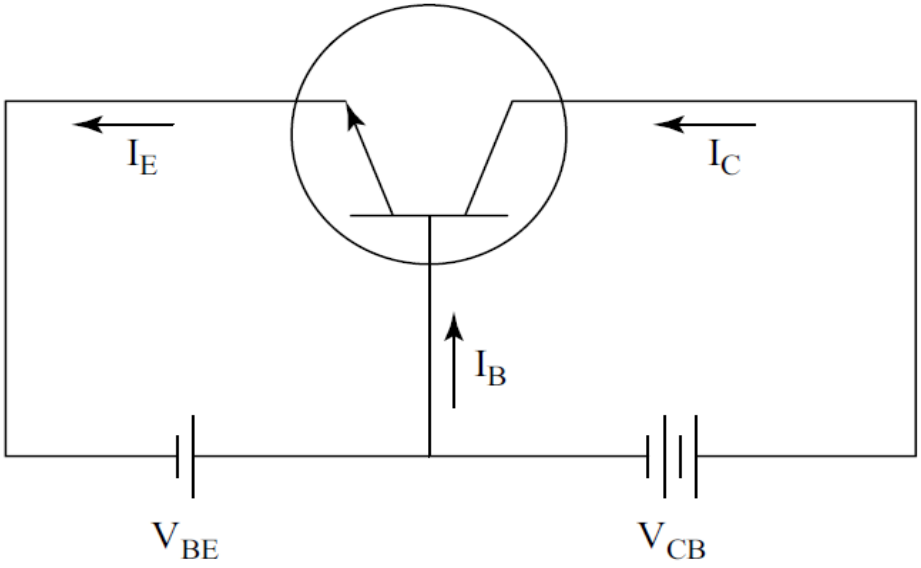

Solution:

Given $\alpha_{dc} = 0.96, I_B = 80 \times 10^6 \text{ A}$

$$\beta_{dc} = \frac{\alpha_{dc}}{1-\alpha_{dc}} = \frac{0.96}{1-0.96} = \frac{0.96}{.04} = 24$$

$$I_C = \frac{\alpha_{dc}}{1-\alpha_{dc}} I_B = \frac{0.96}{1-0.96} \times 80 \times 10^{-6}$$

$$= 1.92 \text{ mA}$$

$$\frac{I_C}{I_E} = \alpha_{dc}$$

$$I_E = \frac{I_C}{\alpha_{dc}} = \frac{1.92}{0.96} \text{mA} = 2 \text{ mA}$$

Bipolar Junction transistors

Configurations

- ✓ Common-base configuration
- ✓ Common-emitter configuration
- ✓ Common-collector configuration

Bipolar Junction Transistors

Common-base configuration

- ✓ base is common to both the input and output sides of the configuration

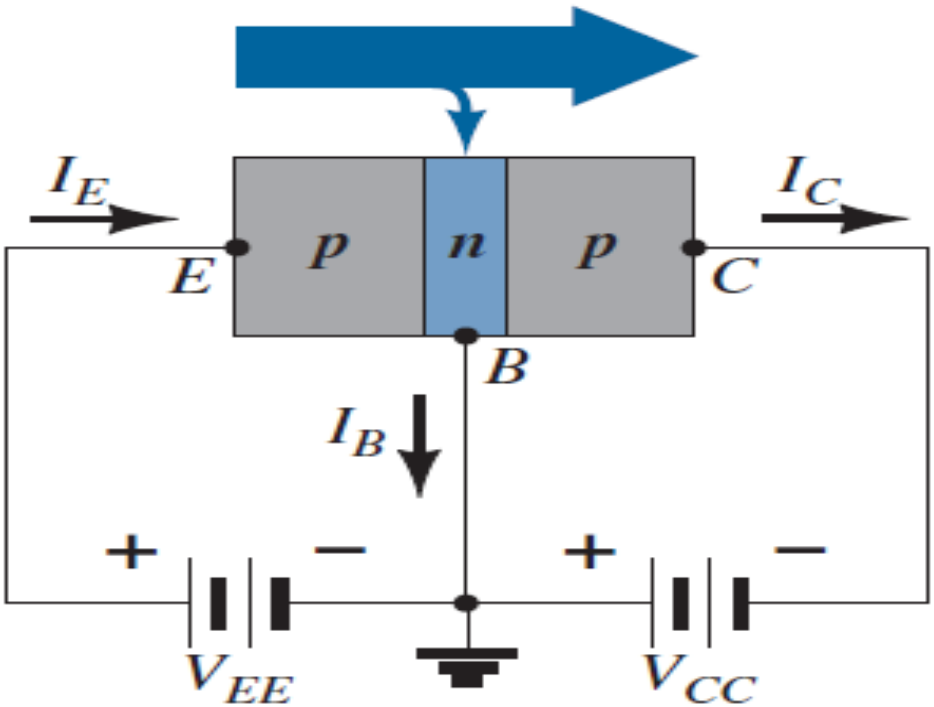

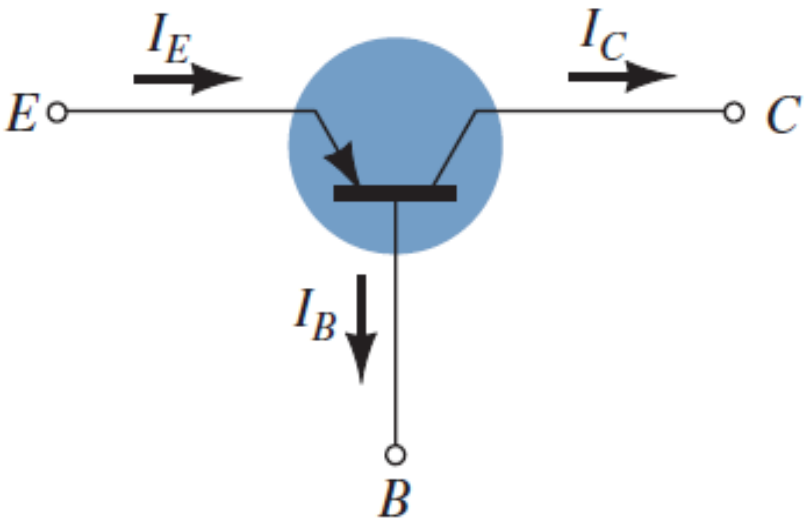

Bipolar Junction Transistors

Common-base configuration

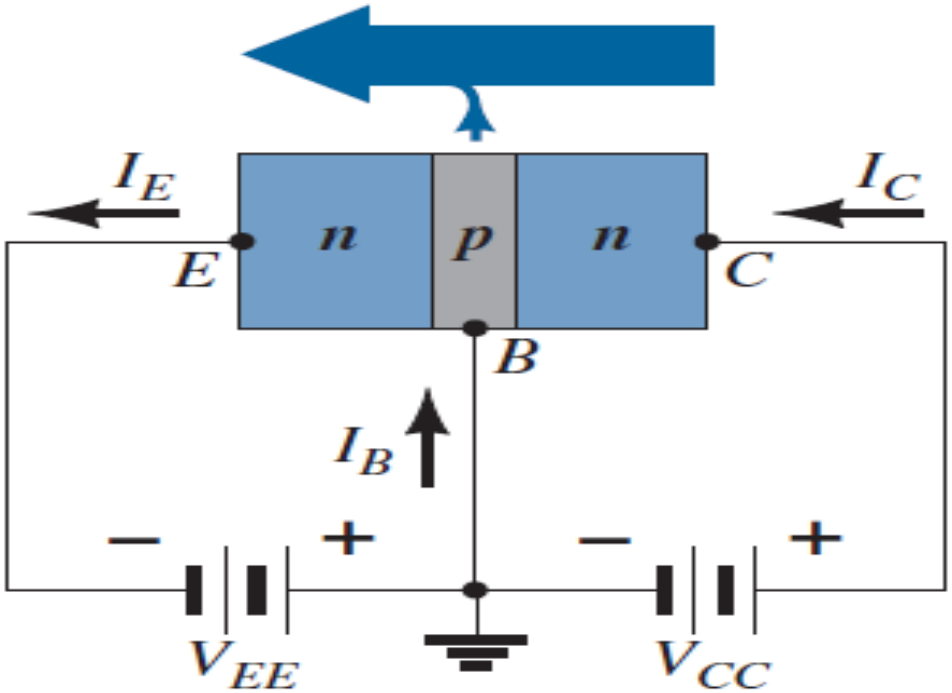

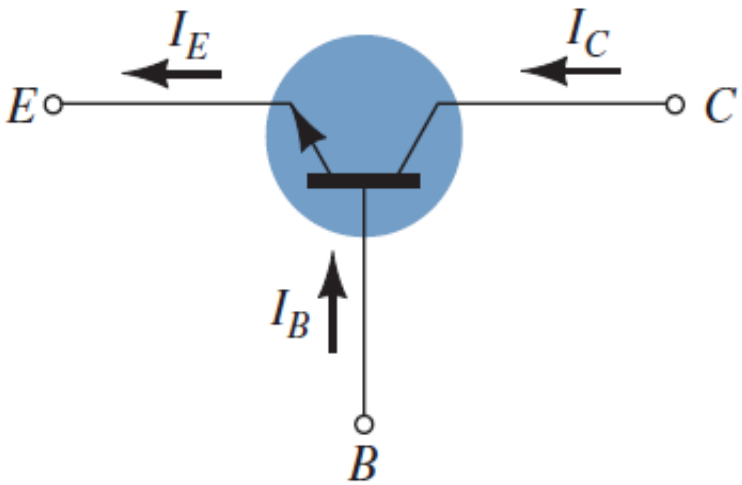

Common-base configuration

Characteristics

- ✓ Driving point or input characteristics
- ✓ Output characteristics

Common-base configuration

Input characteristics- relates an input current (I_E) to an input voltage (V_{BE}) for various levels of output voltage (V_{CB}).

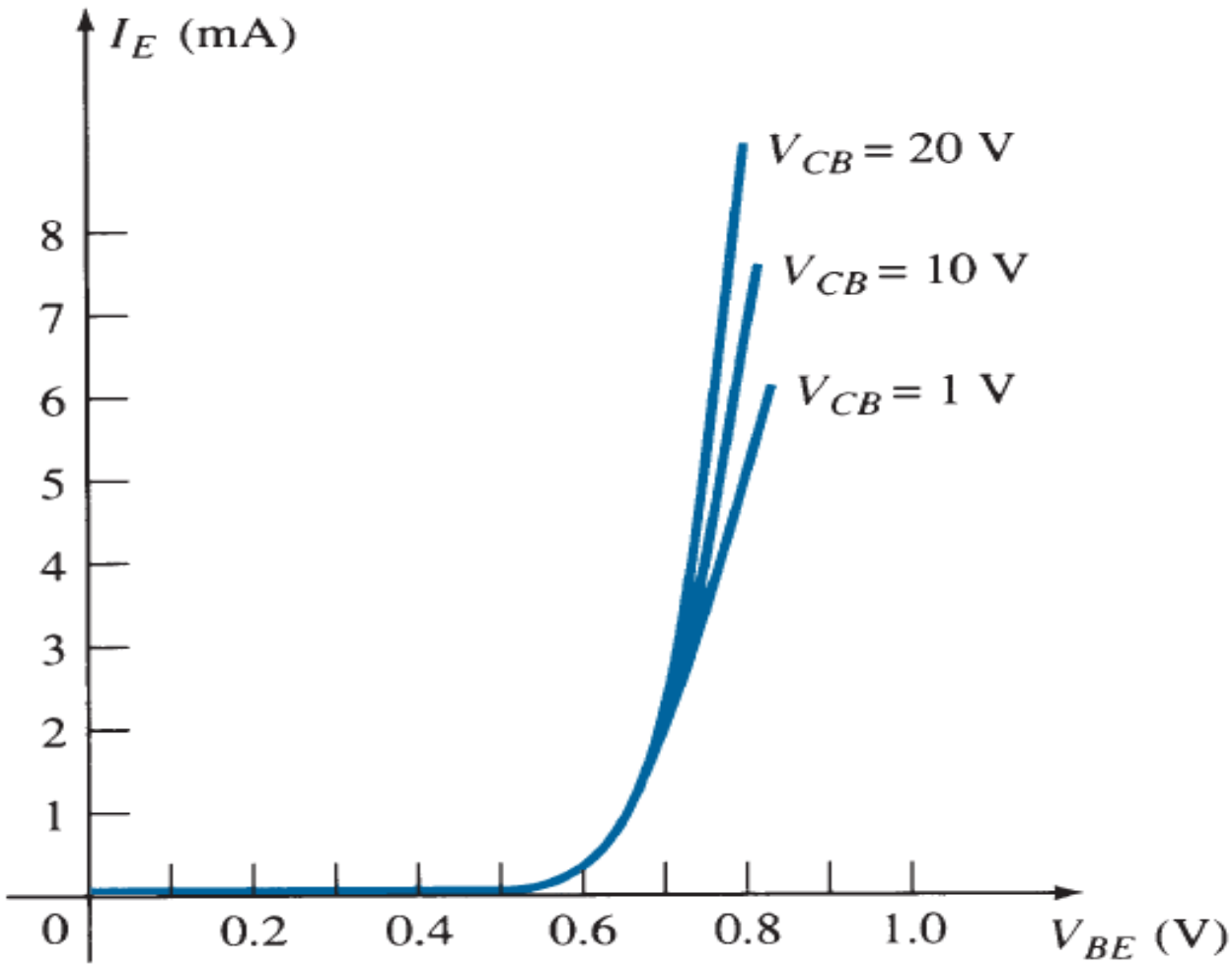

Common-base configuration

Output characteristics- relates an output current (I_C) to an output voltage (V_{CB}) for various levels of input current (I_E).

Three regions:

- ✓ active
- ✓ cutoff
- ✓ saturation

Condition		*Emitter junction*	*Collector junction*	*Region of operation*
I.	FR	Forward-biased	Reverse-biased	Active
II.	FF	Forward-biased	Forward-biased	Saturation
III.	RR	Reverse-biased	Reverse-biased	Cutoff
IV.	RF	Reverse-biased	Forward-biased	Inverted

Common-base configuration

Output characteristics

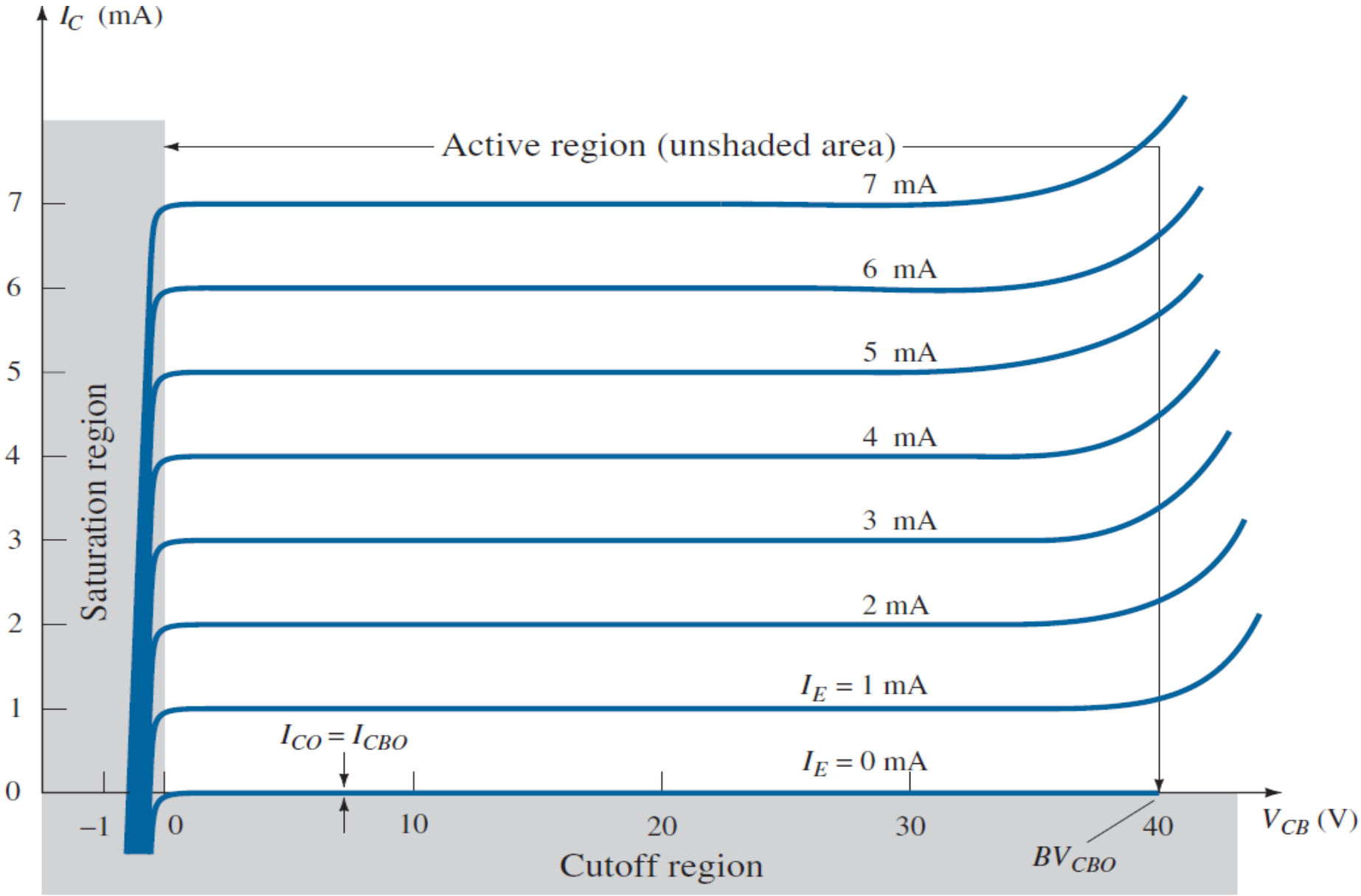

Common-emitter configuration – emitter is made common to the input and output.

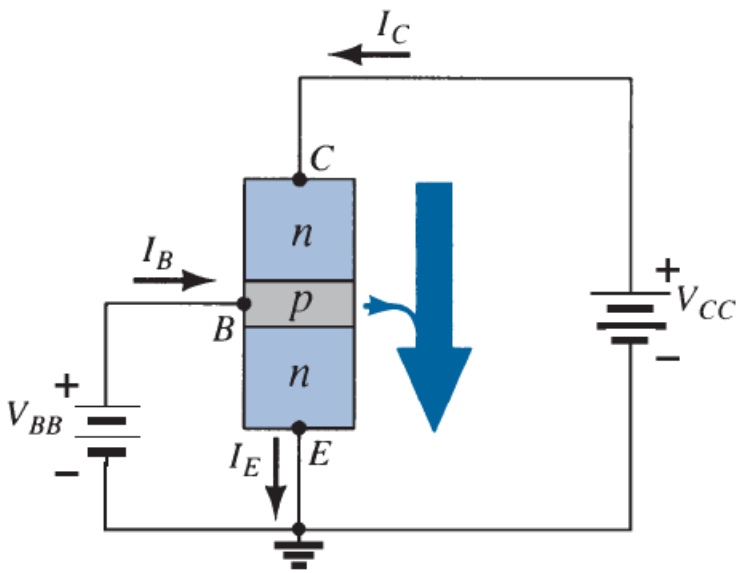

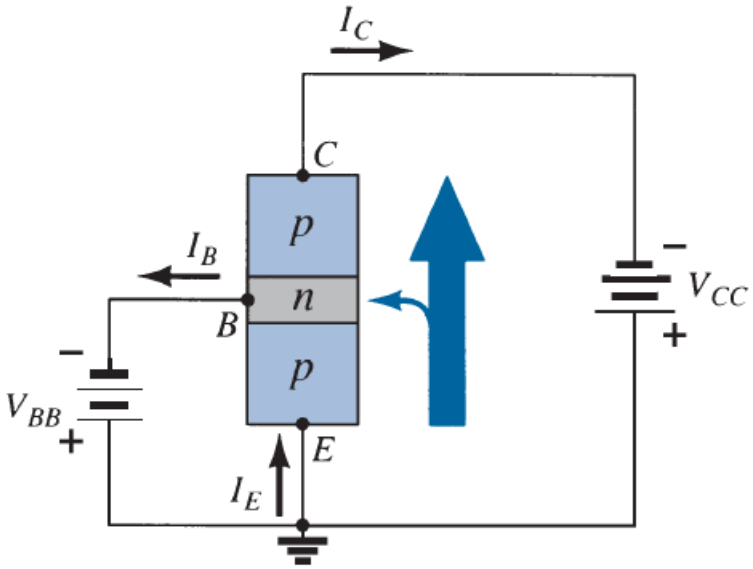

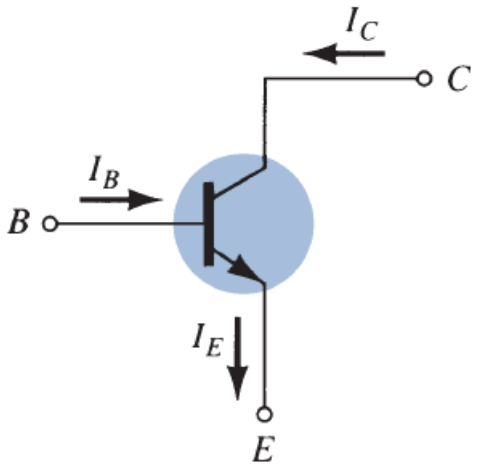

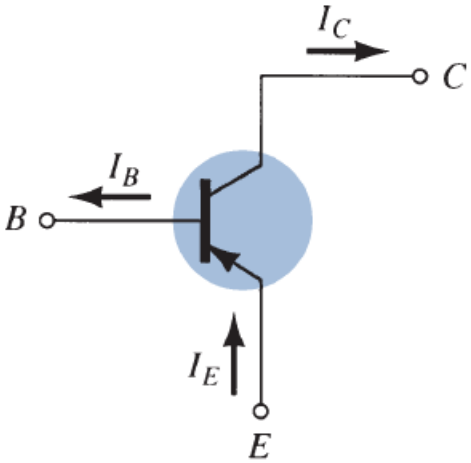

Common-emitter configuration

Input characteristics

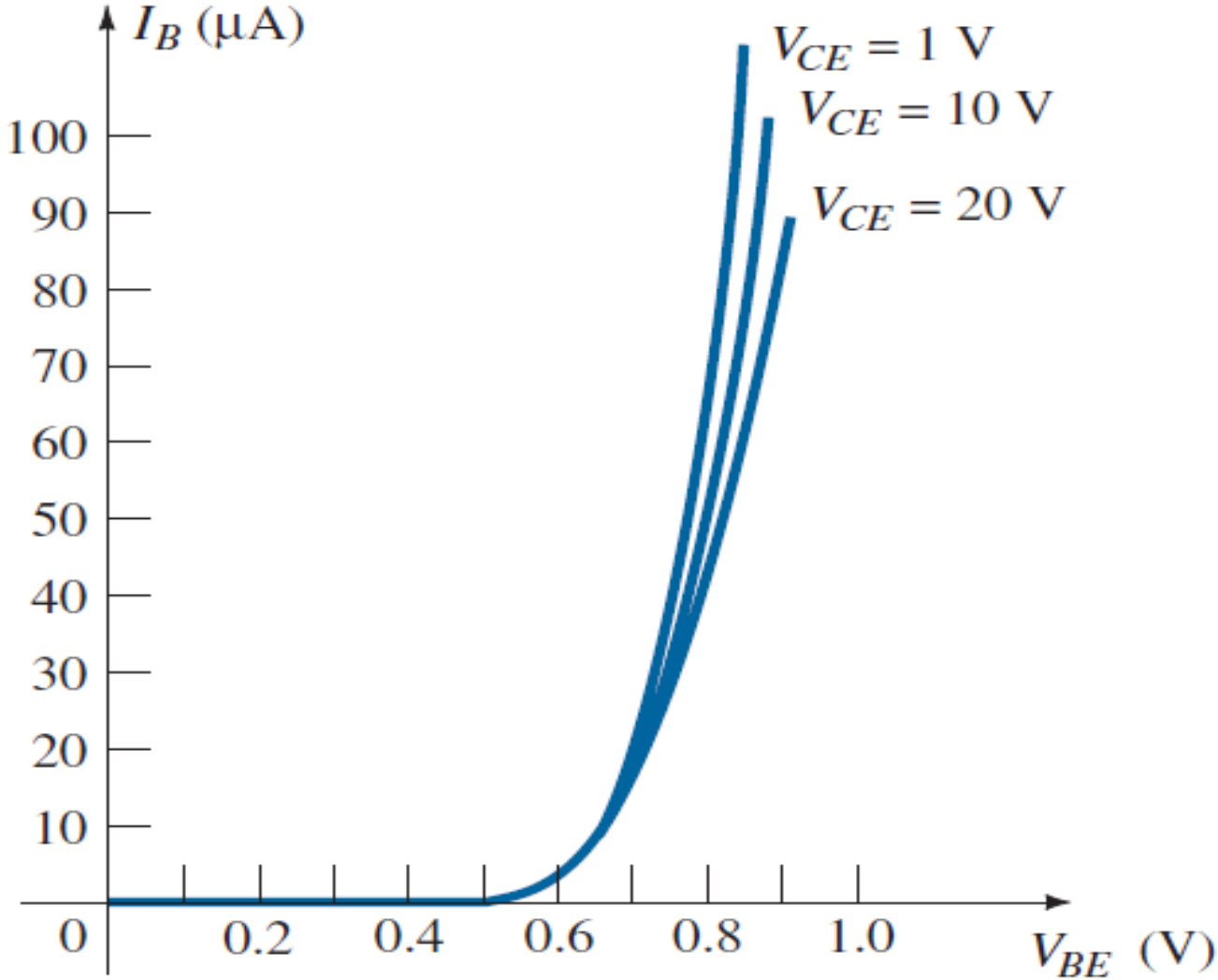

Common-emitter configuration

Output characteristics

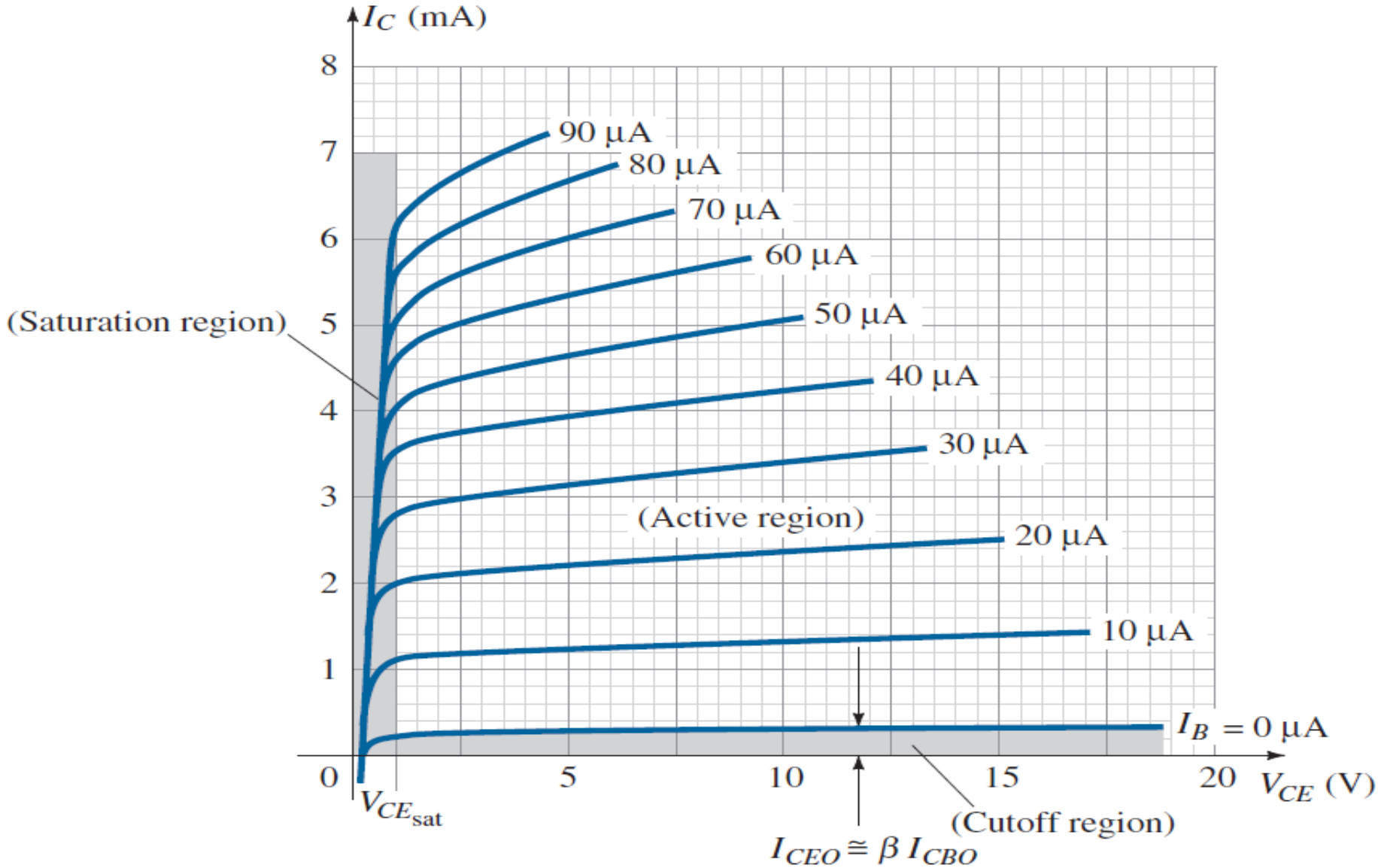

Common-collector configuration

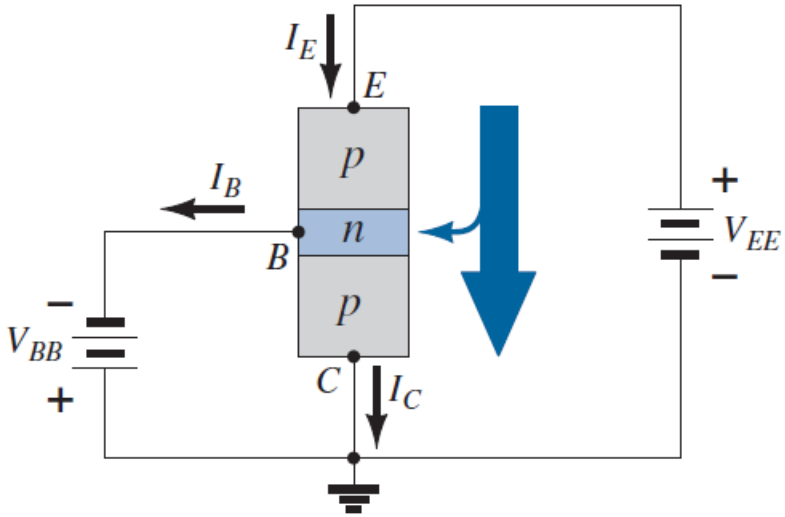

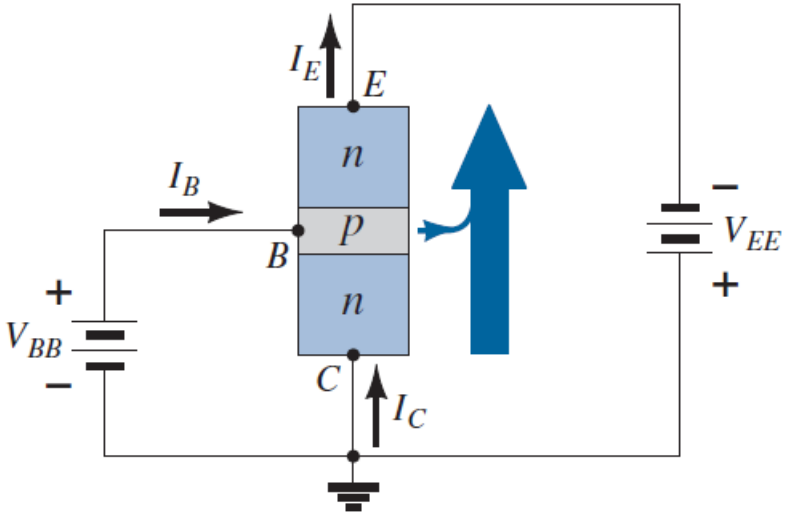

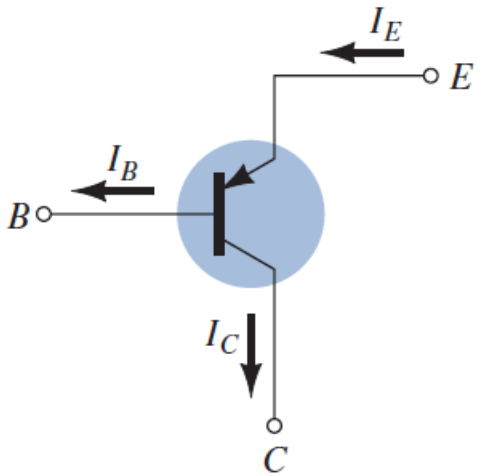

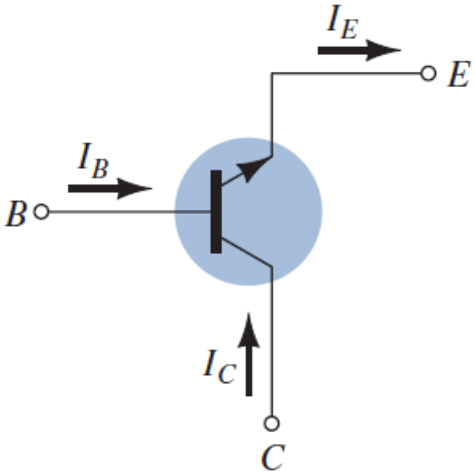

Common-collector configuration

Input characteristics

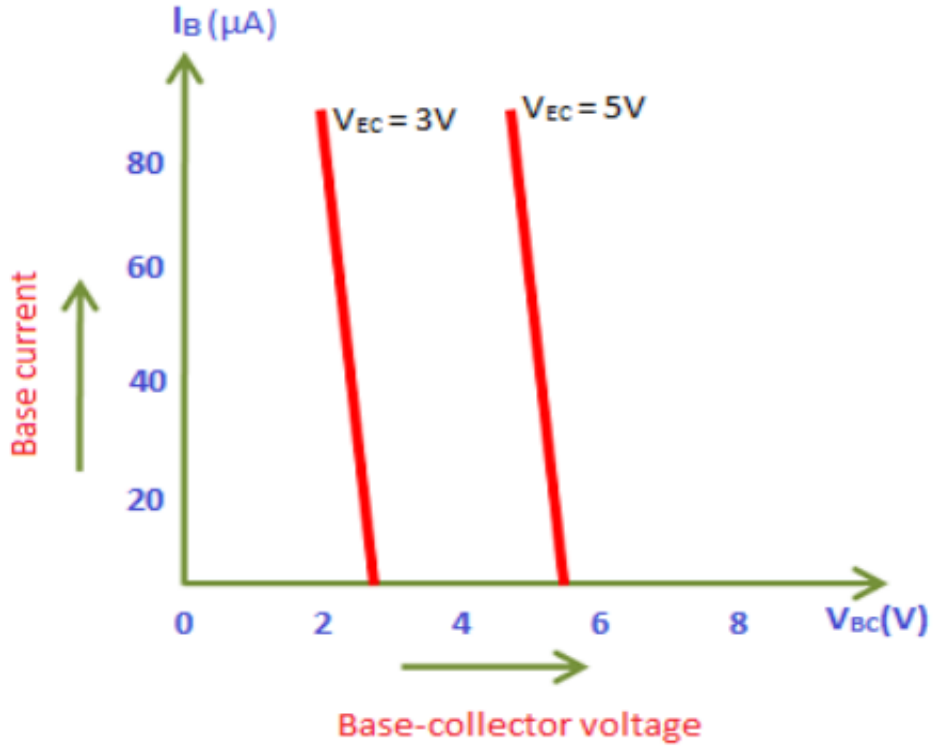

Common-collector configuration

Output characteristics

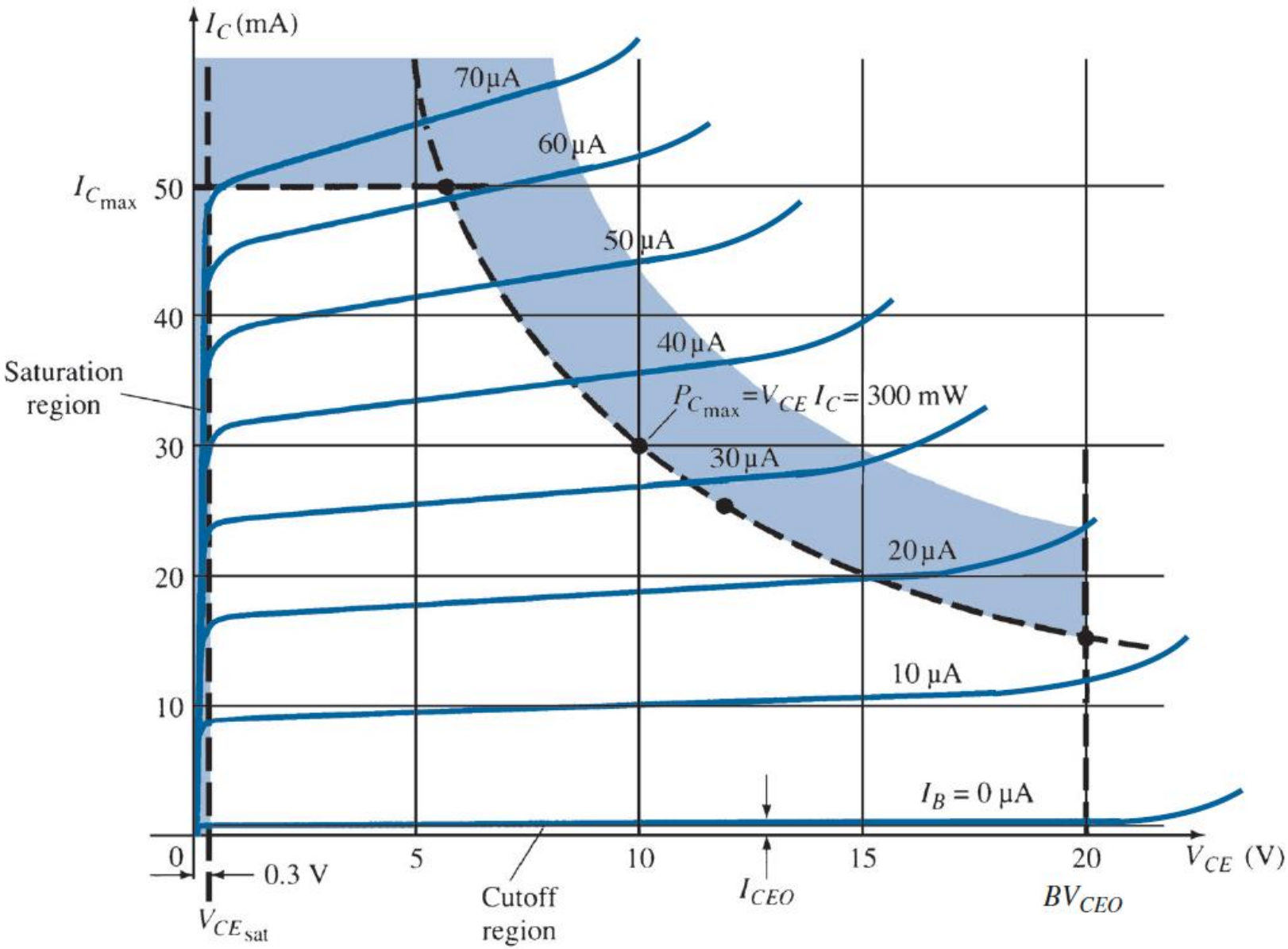

Comparison

	Parameters	*Common-base configuration*	*Common-emitter configuration*
1.	Input dynamic resistance	Very low (20 Ω)	Low (1 kΩ)
2.	Output dynamic resistance	Very high (1 MΩ)	High (10 kΩ)
3.	Current gain	Less than unity (0.98)	High (100)
4.	Leakage current	Very small (5 μA for Ge, 1 μA for Si)	Very large (500 μA for Ge, 20 μA for Si)