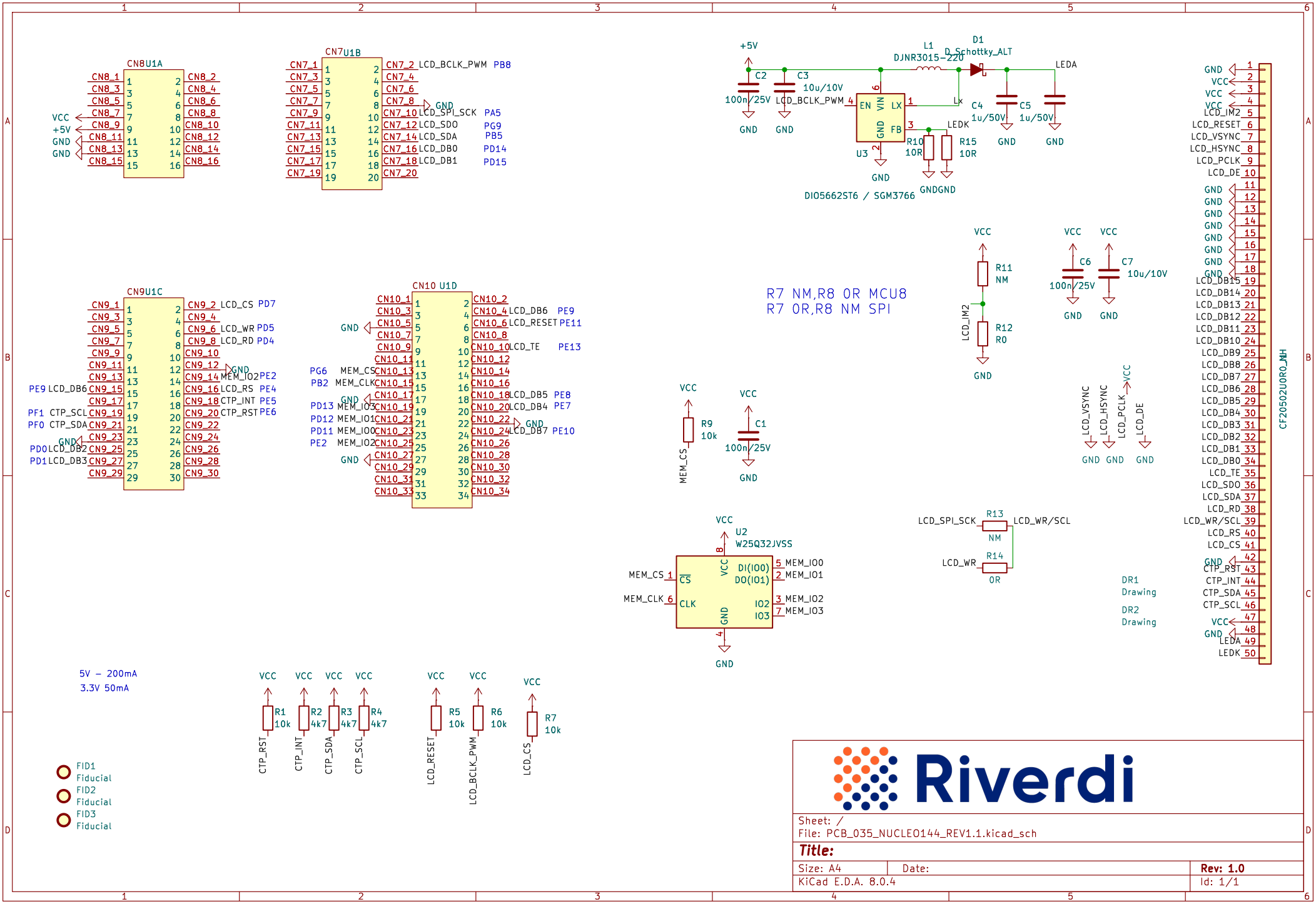
CN8U1A
CN7U1B
CN9U1C
CN10 U1D
CF20502U0RQ_NH
+5V
L1
DJNR3015-220
D1
D_Schottky_ALT
LEDA
C2
100n/25V
C3
10u/10V
LCD_BCLK_PWM
C4
1u/50V
C5
1u/50V
LEDK
R10
10R
R15
10R
U3
DIO5662ST6 / SGM3766
R7 NM,R8 0R MCU8
R7 0R,R8 NM SPI
R11
NM
R12
R0
LCD_IM2
C6
100n/25V
C7
10u/10V
R9
10k
MEM_CS
C1
100n/25V
LCD_VSYNC
LCD_HSYNC
LCD_PCLK
LCD_DE
U2
W25Q32JVSS
MEM_CS
MEM_CLK
MEM_IO0
MEM_IO1
MEM_IO2
MEM_IO3
LCD_SPI_SCK
R13
NM
LCD_WR/SCL
LCD_WR
R14
0R
DR1
Drawing
DR2
Drawing
5V – 200mA
3.3V 50mA
R1
10k
R2
4k7
R3
4k7
R4
4k7
R5
10k
R6
10k
R7
10k
CTP_RST
CTP_INT
CTP_SDA
CTP_SCL
LCD_RESET
LCD_BCLK_PWM
LCD_CS
FID1
Fiducial
FID2
Fiducial
FID3
Fiducial
Riverdi
Sheet: /
File: PCB_035_NUCLEO144_REV1.1.kicad_sch
Title:
Size: A4
Date:
Rev: 1.0
KiCad E.D.A. 8.0.4
Id: 1/1