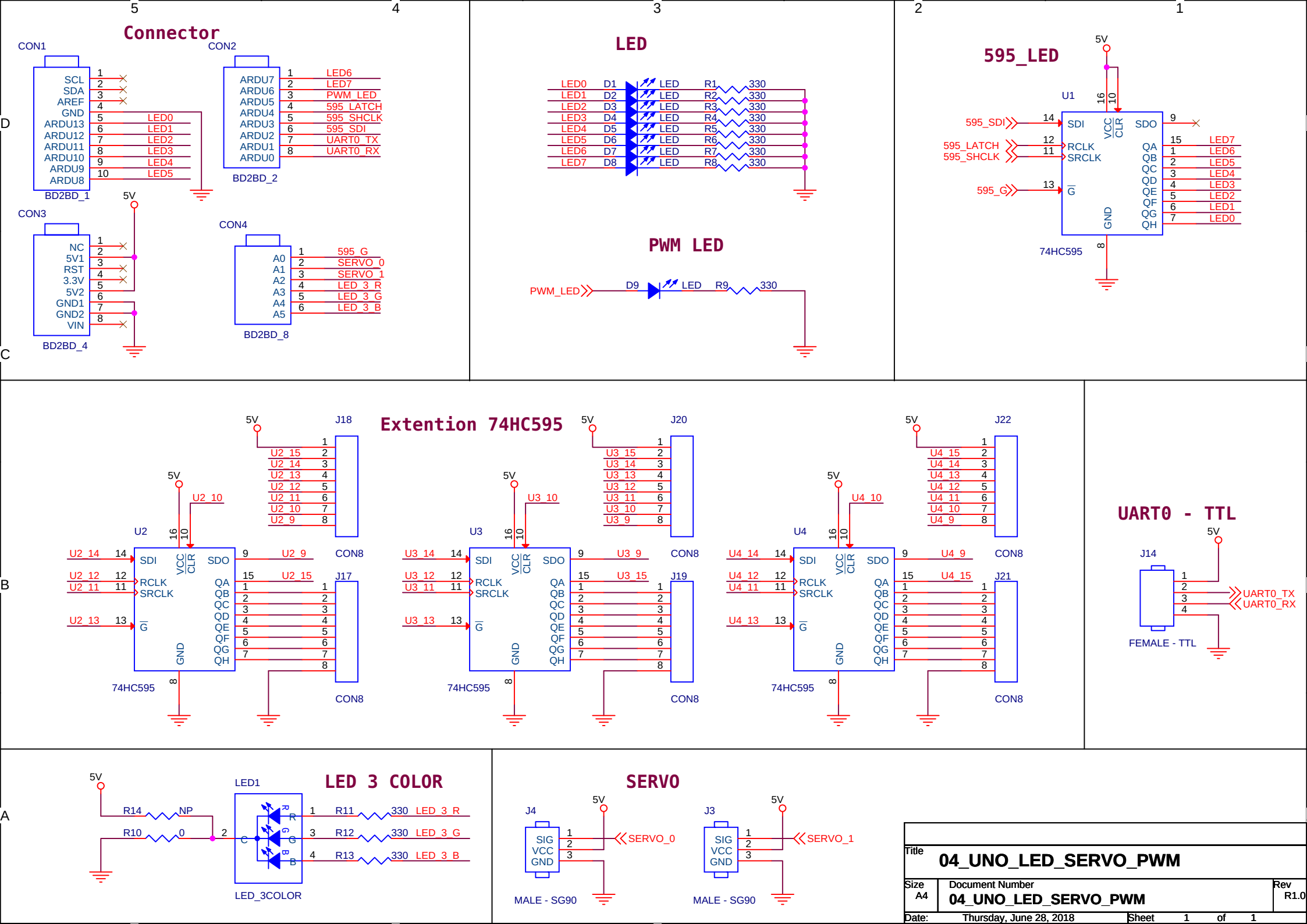
Connector
CON1
BD2BD_1
SCL
SDA
AREF
GND
ARDU13
ARDU12
ARDU11
ARDU10
ARDU9
ARDU8
LED0
LED1
LED2
LED3
LED4
LED5
CON2
BD2BD_2
ARDU7
ARDU6
ARDU5
ARDU4
ARDU3
ARDU2
ARDU1
ARDU0
LED6
LED7
PWM_LED
595_LATCH
595_SHCLK
595_SDI
UART0_TX
UART0_RX
CON3
BD2BD_4
NC
5V1
RST
3.3V
5V2
GND1
GND2
VIN
5V
CON4
BD2BD_8
A0
A1
A2
A3
A4
A5
595_G
SERVO_0
SERVO_1
LED_3_R
LED_3_G
LED_3_B
LED
D1
D2
D3
D4
D5
D6
D7
D8
R1
R2
R3
R4
R5
R6
R7
R8
330
PWM_LED
D9
R9
595_LED
U1
595_SDI
595_LATCH
595_SHCLK
595_G
SDI
RCLK
SRCLK
G
VCC
CLR
SDO
GND
QA
QB
QC
QD
QE
QF
QG
QH
74HC595
Extention 74HC595
J18
J17
J20
J19
J22
J21
CON8
U2
U3
U4
U2_10
U3_10
U4_10
U2_9
U2_15
U3_9
U3_15
U4_9
U4_15
UART0 - TTL
J14
FEMALE - TTL
LED 3 COLOR
LED1
LED_3COLOR
R14
NP
R10
0
R11
R12
R13
SERVO
J4
J3
SIG
VCC
GND
MALE - SG90
Title
04_UNO_LED_SERVO_PWM
Size
A4
Document Number
04_UNO_LED_SERVO_PWM
Rev
R1.0
Date:
Thursday, June 28, 2018
Sheet
1
of
1