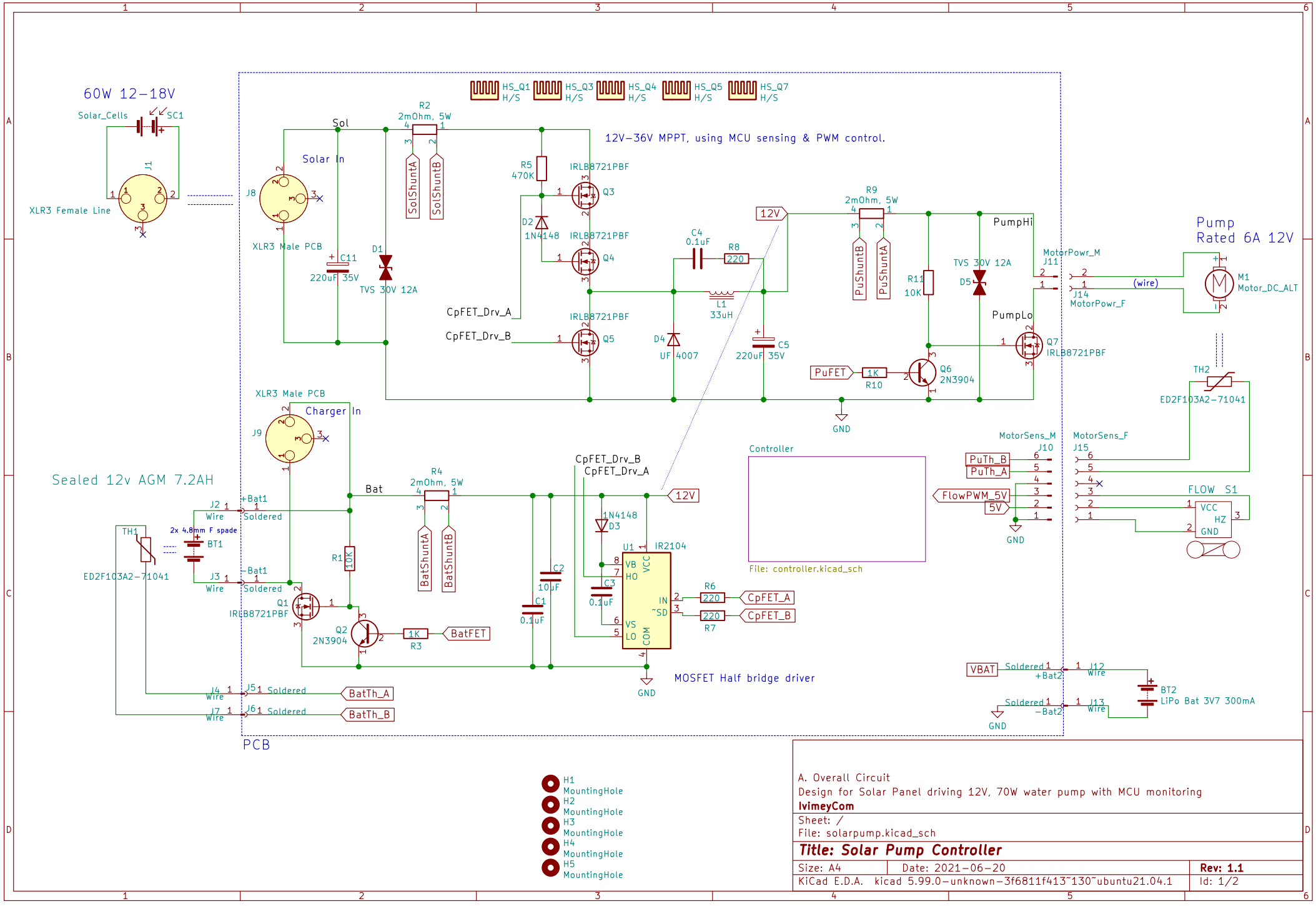

A. Overall Circuit
Design for Solar Panel driving 12V, 70W water pump with MCU monitoring
IvimeyCom
Sheet: /
File: solarpump.kicad_sch

Title: Solar Pump Controller

Size: A4	Date: 2021-06-20	**Rev: 1.1**
KiCad E.D.A. kicad 5.99.0-unknown-3f6811f413~130~ubuntu21.04.1		Id: 1/2

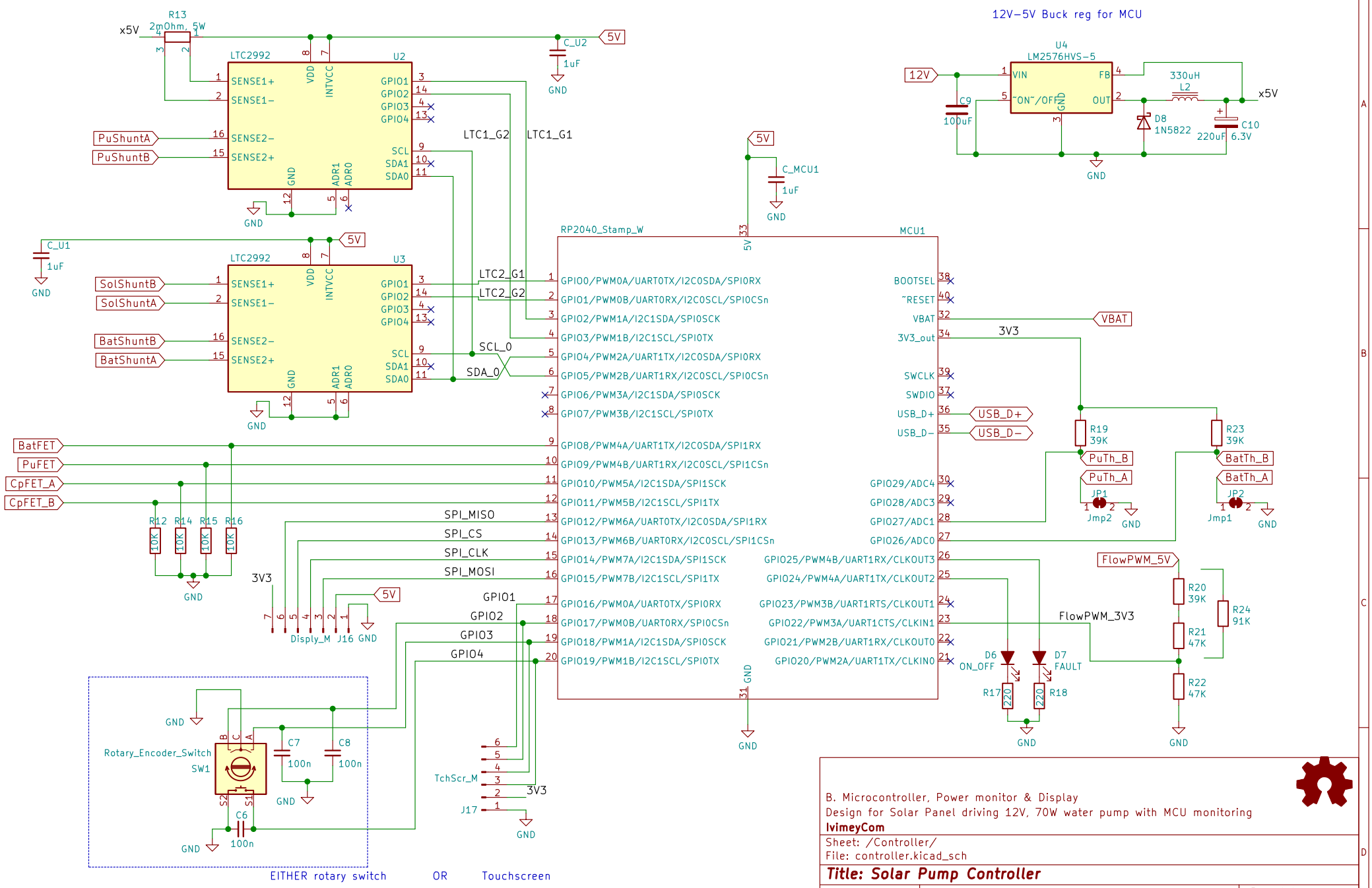
12V–5V Buck reg for MCU
U4
LM2576HVS-5
VIN
~ON~/OFF
GND
FB
OUT
12V
C9
100uF
330uH
L2
D8
1N5822
C10
220uF 6.3V
x5V
GND
R13
2mOhm, 5W
x5V
LTC2992
U2
SENSE1+
SENSE1–
SENSE2–
SENSE2+
VDD
INTVCC
GPIO1
GPIO2
GPIO3
GPIO4
SCL
SDA1
SDA0
ADR1
ADR0
PuShuntA
PuShuntB
C_U2
1uF
5V
LTC1_G2
LTC1_G1
C_U1
1uF
LTC2992
U3
SolShuntB
SolShuntA
BatShuntB
BatShuntA
LTC2_G1
LTC2_G2
SCL_0
SDA_0
C_MCU1
1uF
RP2040_Stamp_W
MCU1
GPIO0/PWM0A/UART0TX/I2C0SDA/SPI0RX
GPIO1/PWM0B/UART0RX/I2C0SCL/SPI0CSn
GPIO2/PWM1A/I2C1SDA/SPI0SCK
GPIO3/PWM1B/I2C1SCL/SPI0TX
GPIO4/PWM2A/UART1TX/I2C0SDA/SPI0RX
GPIO5/PWM2B/UART1RX/I2C0SCL/SPI0CSn
GPIO6/PWM3A/I2C1SDA/SPI0SCK
GPIO7/PWM3B/I2C1SCL/SPI0TX
GPIO8/PWM4A/UART1TX/I2C0SDA/SPI1RX
GPIO9/PWM4B/UART1RX/I2C0SCL/SPI1CSn
GPIO10/PWM5A/I2C1SDA/SPI1SCK
GPIO11/PWM5B/I2C1SCL/SPI1TX
GPIO12/PWM6A/UART0TX/I2C0SDA/SPI1RX
GPIO13/PWM6B/UART0RX/I2C0SCL/SPI1CSn
GPIO14/PWM7A/I2C1SDA/SPI1SCK
GPIO15/PWM7B/I2C1SCL/SPI1TX
GPIO16/PWM0A/UART0TX/SPI0RX
GPIO17/PWM0B/UART0RX/SPI0CSn
GPIO18/PWM1A/I2C1SDA/SPI0SCK
GPIO19/PWM1B/I2C1SCL/SPI0TX
BOOTSEL
~RESET
VBAT
3V3_out
SWCLK
SWDIO
USB_D+
USB_D–
GPIO29/ADC4
GPIO28/ADC3
GPIO27/ADC1
GPIO26/ADC0
GPIO25/PWM4B/UART1RX/CLKOUT3
GPIO24/PWM4A/UART1TX/CLKOUT2
GPIO23/PWM3B/UART1RTS/CLKOUT1
GPIO22/PWM3A/UART1CTS/CLKIN1
GPIO21/PWM2B/UART1RX/CLKOUT0
GPIO20/PWM2A/UART1TX/CLKIN0
VBAT
3V3
USB_D+
USB_D–
R19
39K
R23
39K
PuTh_B
PuTh_A
BatTh_B
BatTh_A
JP1
Jmp2
JP2
Jmp1
BatFET
PuFET
CpFET_A
CpFET_B
R12
R14
R15
R16
10K
SPI_MISO
SPI_CS
SPI_CLK
SPI_MOSI
3V3
Disply_M
J16
GPIO1
GPIO2
GPIO3
GPIO4
FlowPWM_5V
R20
39K
R24
91K
R21
47K
R22
47K
FlowPWM_3V3
D6
ON_OFF
D7
FAULT
R17
220
R18
220
Rotary_Encoder_Switch
SW1
C7
100n
C8
100n
C6
100n
TchScr_M
J17
3V3
EITHER rotary switch
OR
Touchscreen
B. Microcontroller, Power monitor & Display
Design for Solar Panel driving 12V, 70W water pump with MCU monitoring
IvimeyCom
Sheet: /Controller/
File: controller.kicad_sch
Title: Solar Pump Controller
Size: A4
Date: 2021-06-20
Rev: 1.1
KiCad E.D.A. kicad 5.99.0-unknown-3f6811f413~130~ubuntu21.04.1
Id: 3/2