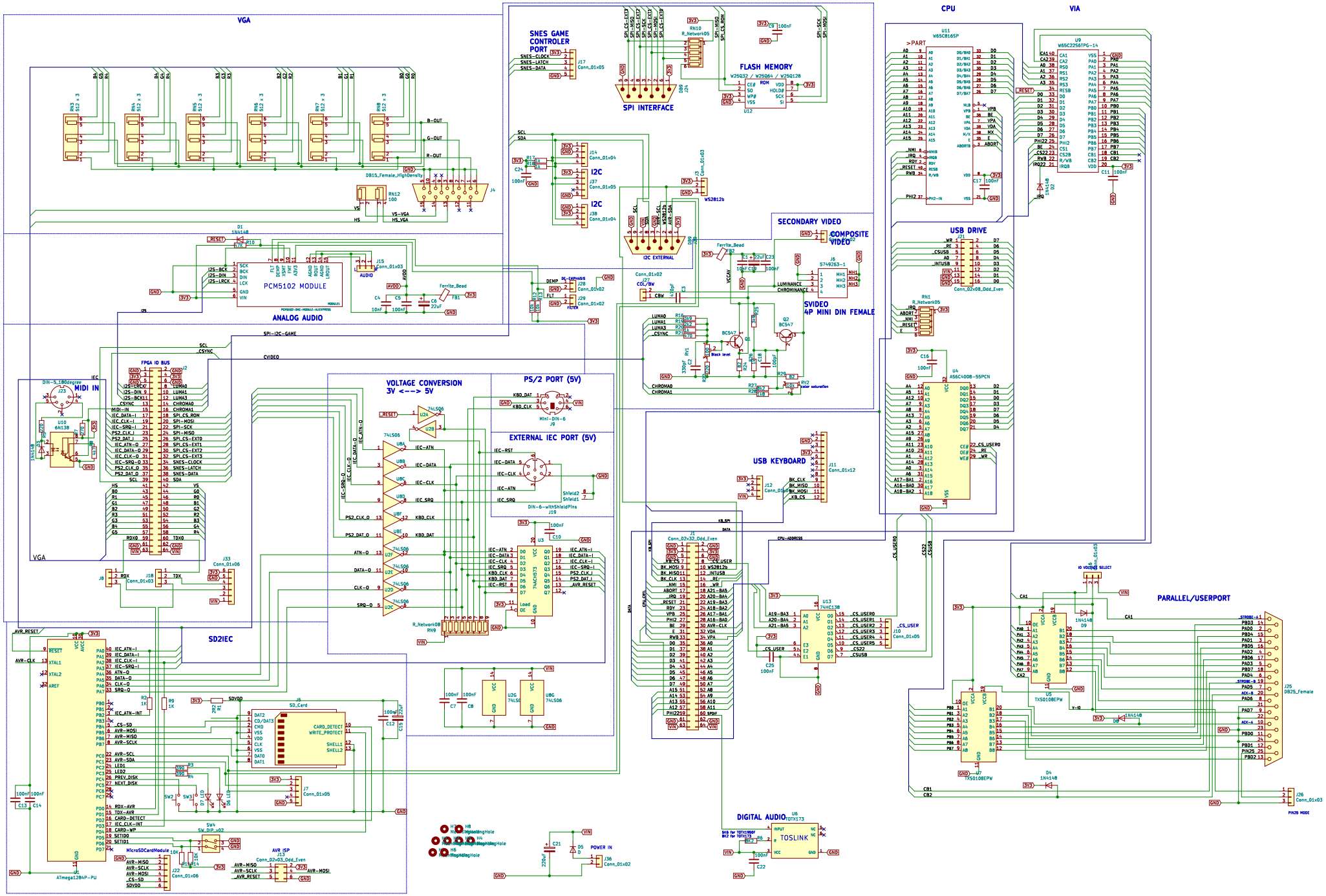
VGA
SNES GAME CONTROLER PORT
SPI INTERFACE
FLASH MEMORY
CPU
VIA
I2C
I2C EXTERNAL
SECONDARY VIDEO
COMPOSITE VIDEO
SVIDEO 4P MINI DIN FEMALE
USB DRIVE
PCM5102 MODULE
ANALOG AUDIO
FPGA IO BUS
MIDI IN
VOLTAGE CONVERSION 3V <--> 5V
PS/2 PORT (5V)
EXTERNAL IEC PORT (5V)
USB KEYBOARD
SD2IEC
PARALLEL/USERPORT
DIGITAL AUDIO
TOSLINK
POWER IN