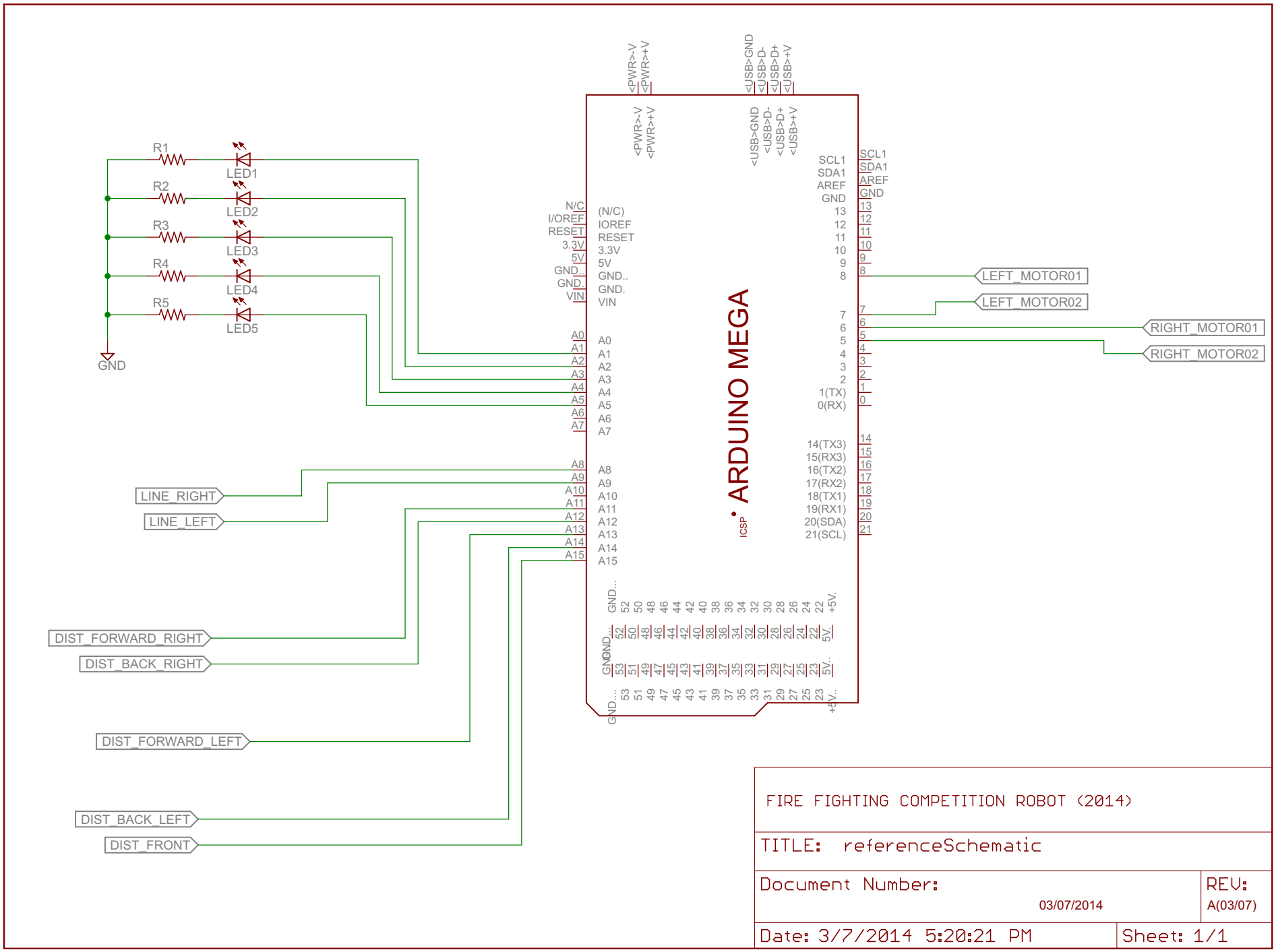
R1
R2
R3
R4
R5
LED1
LED2
LED3
LED4
LED5
GND
ARDUINO MEGA
ICSP
LEFT_MOTOR01
LEFT_MOTOR02
RIGHT_MOTOR01
RIGHT_MOTOR02
LINE_RIGHT
LINE_LEFT
DIST_FORWARD_RIGHT
DIST_BACK_RIGHT
DIST_FORWARD_LEFT
DIST_BACK_LEFT
DIST_FRONT
FIRE FIGHTING COMPETITION ROBOT (2014)
TITLE: referenceSchematic
Document Number:
03/07/2014
REV:
A(03/07)
Date: 3/7/2014 5:20:21 PM
Sheet: 1/1