END-TO-END CONTROL SYSTEMS & MECHATRONICS DESIGN (CABLE-DRIVEN MANIPULATOR)

2025 MAY- 2026 MAY

NTU ADVANCED ROBOTICS RESEARCH LAB X SCHAFFLER ADVANCED RESEARCH HUB

(SINGLE JOINT CONTROL VALIDATION)

- 10+ Design iterations to optimize cable routing and joint efficiency.
- Real-time CAN-Bus network control for motors
- Implementation of **closed-loop impedance control + gravity compensation feed forward**
- Cable-driven joint accuracy of **>95%** (read implementing joint encoder
- Full mathematical modelling of the cable-driven joint

SolidWorks View

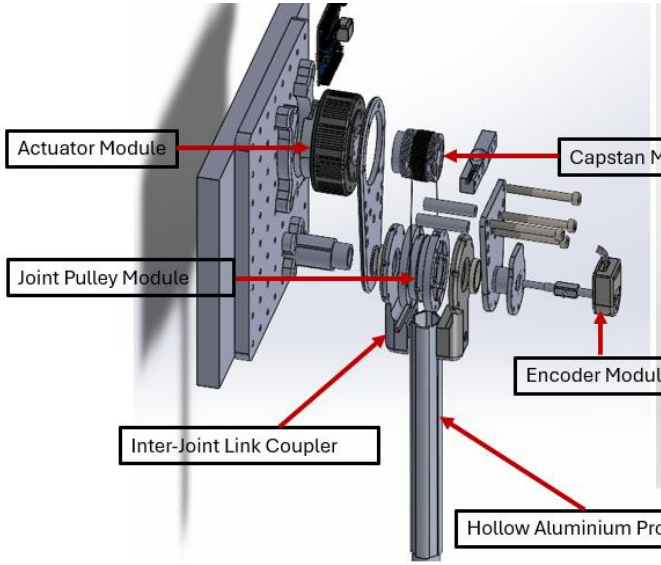

Rendered View

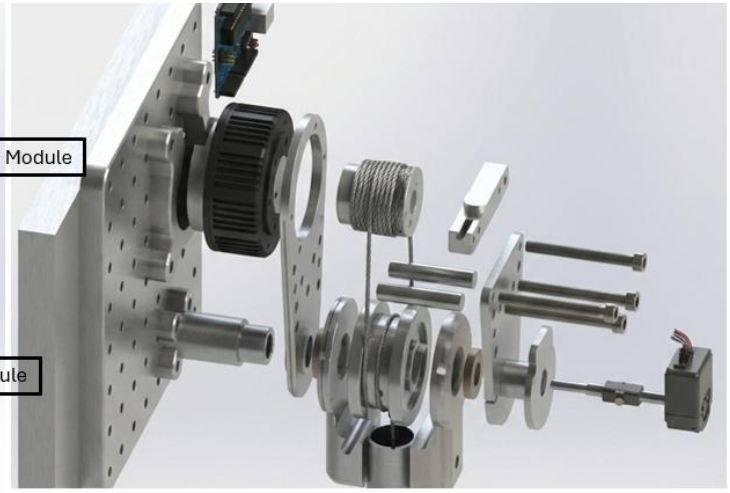

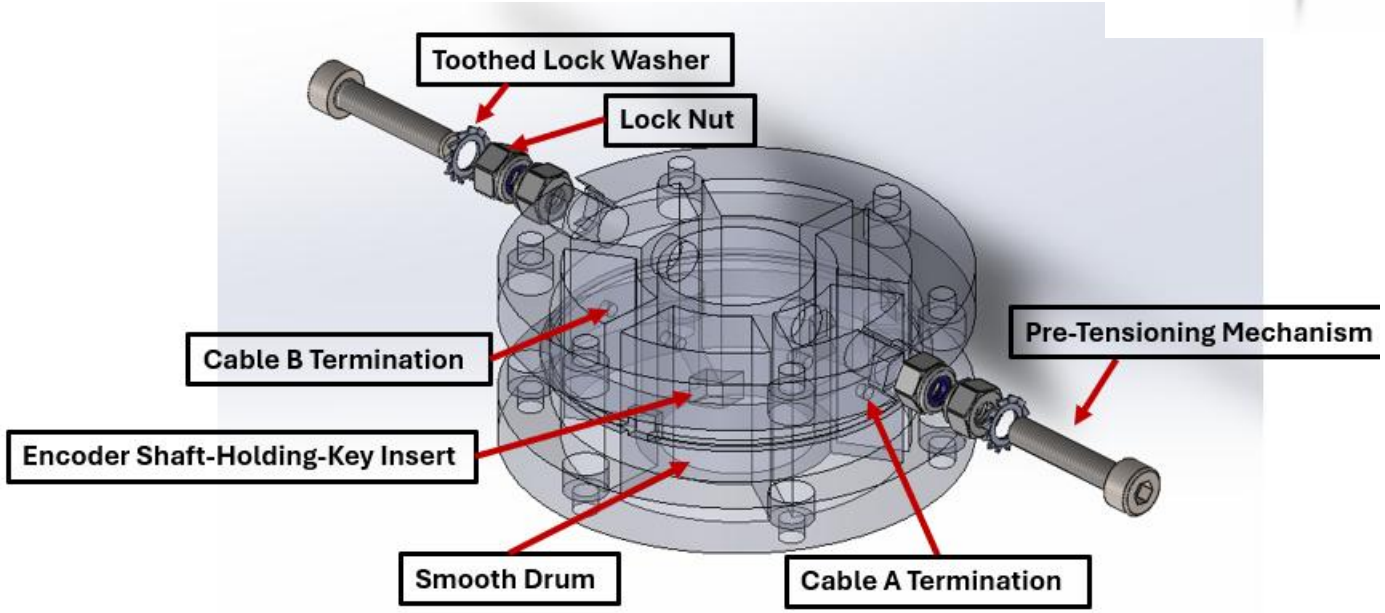

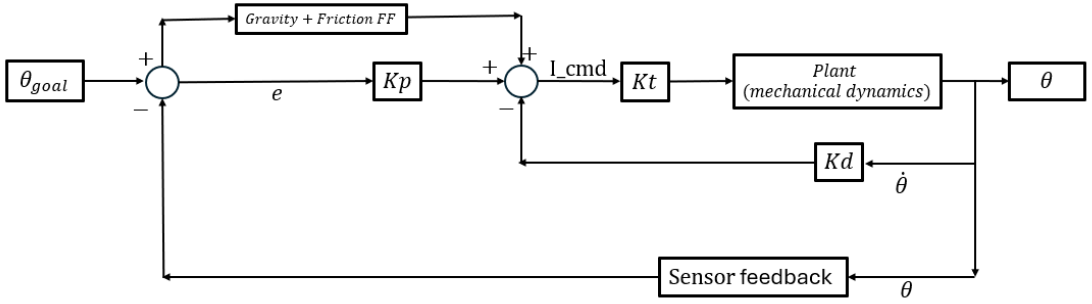

(full detailed metrics confidential)

EXPANSION INTO MULTIPLE–DOF TORQUE–CONTROLLED CABLE-DRIVEN MANIPULATOR (In Progress)

NTU ADVANCED ROBOTICS RESEARCH LAB X SCHAFFLER ADVANCED RESEARCH HUB

Goal: To perform precise insertion tasks utilizing torque control.

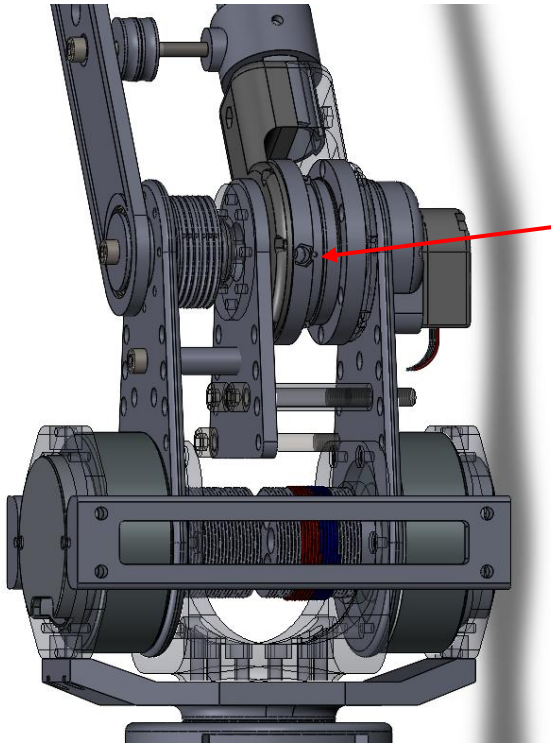

Custom-made driven pulley with **pre-tensioning** capabilities

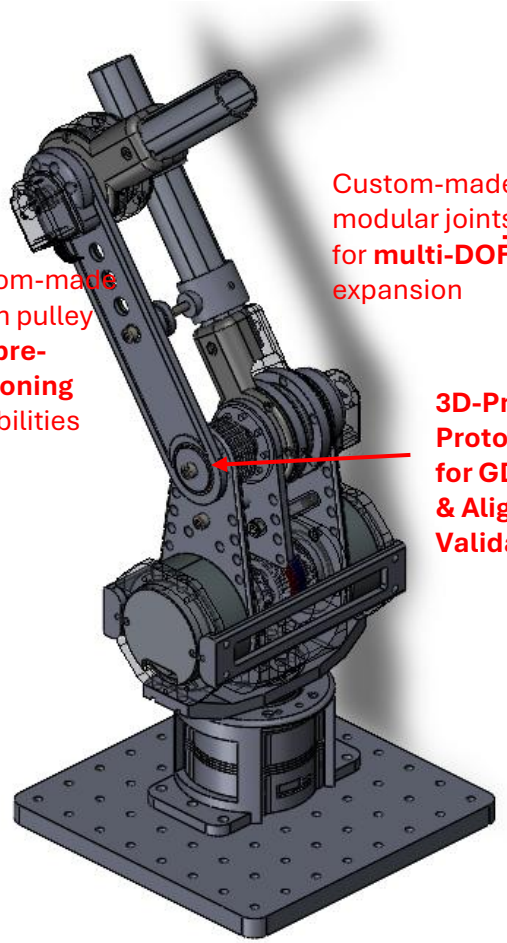

Custom-made modular joints for **multi-DOF** expansion

3D-Printed Prototyping for GD&T, Fit & Alignment Validation

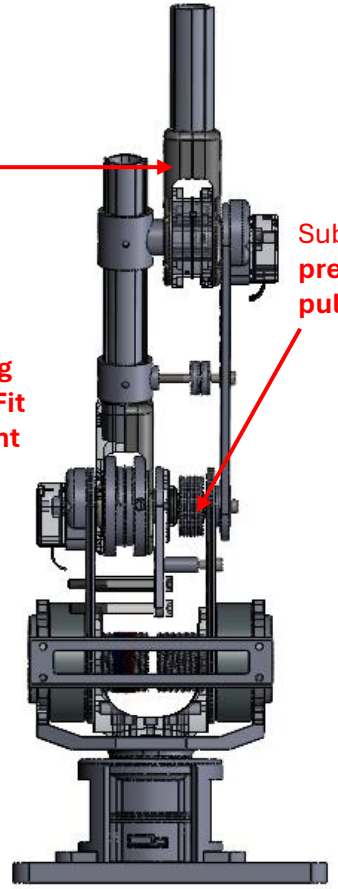

Sub-millimeter **precision capstan pulley groove**

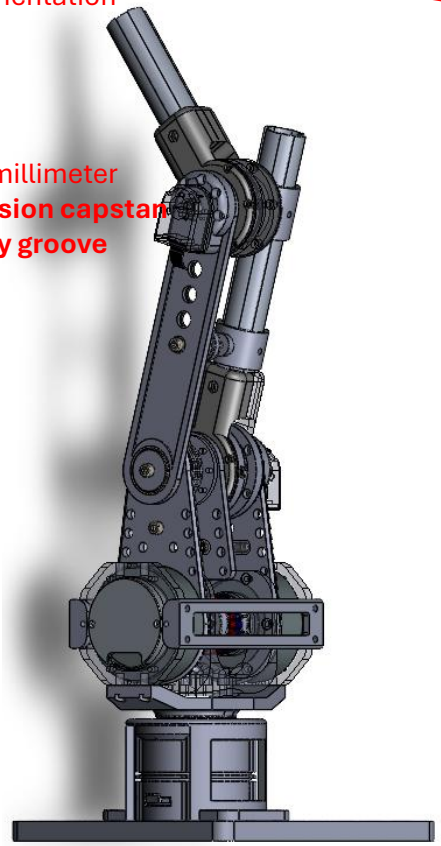

Continuous **Structural Optimization** to handle extreme torque and stress in upside-down orientation

Increased infill
Use of ribs
Increased thickness

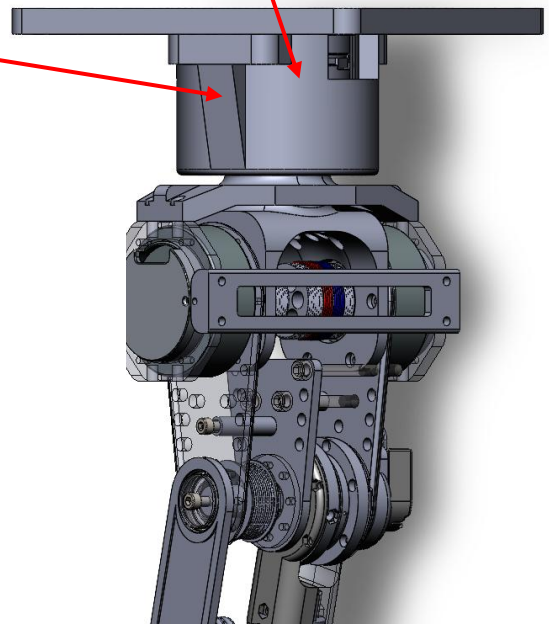

Complete mathematical modelling of the robotic system:

- Forward & Inverse Kinematics
- Dynamic Control: Gravity Compensation + Impedance Control
- Quintic Trajectory Planning

(full detailed metrics confidential)

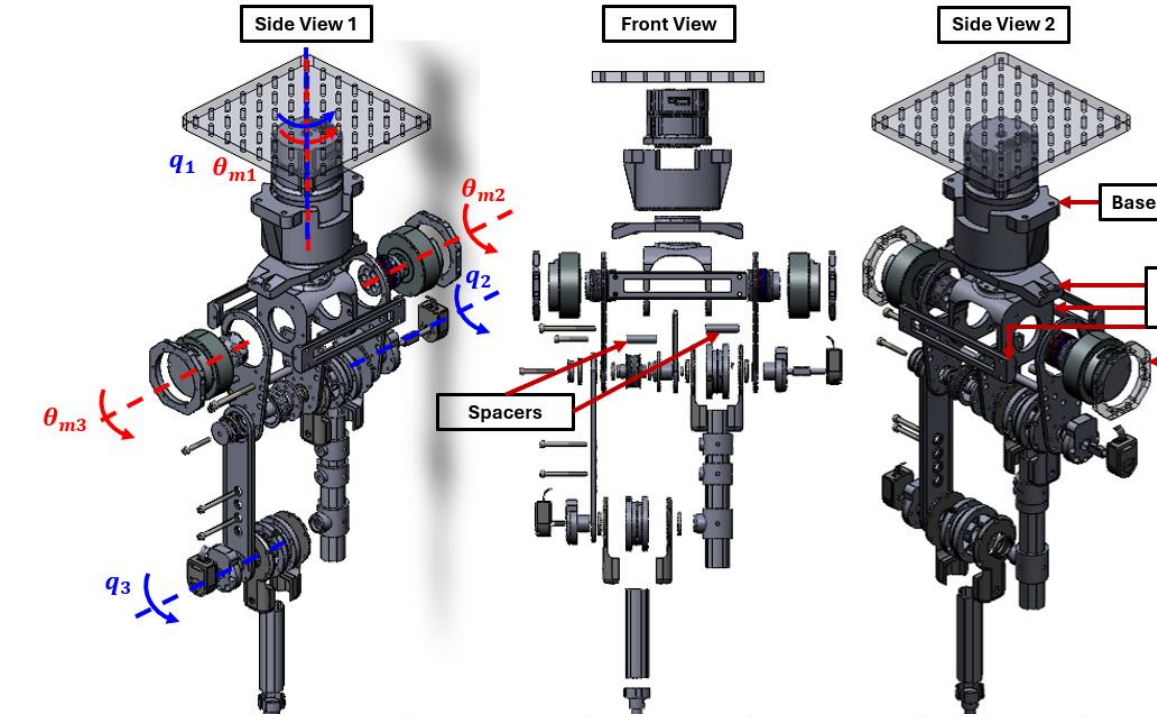
Side View 1
Front View
Side View 2
q_1
θ_{m1}
θ_{m2}
q_2
θ_{m3}
q_3
Base Holder
Actuator 2,3 Stabilizer
Spacers

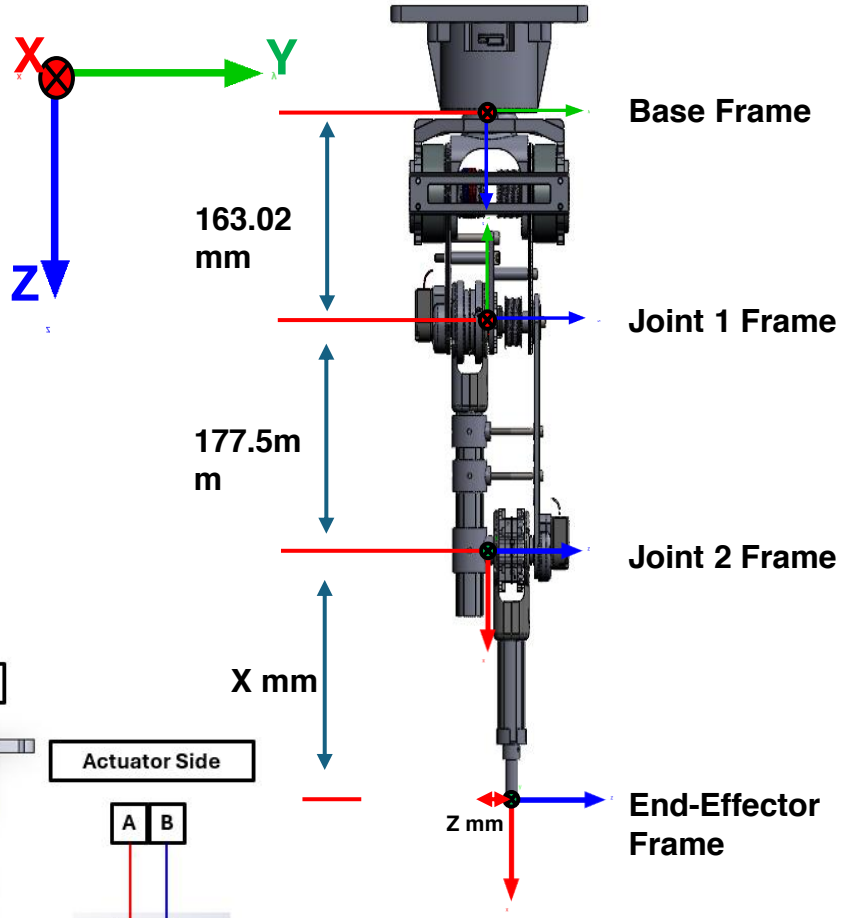
X
Y
Z
Base Frame
163.02 mm
Joint 1 Frame
177.5mm
Joint 2 Frame
X mm
Z mm
End-Effector Frame

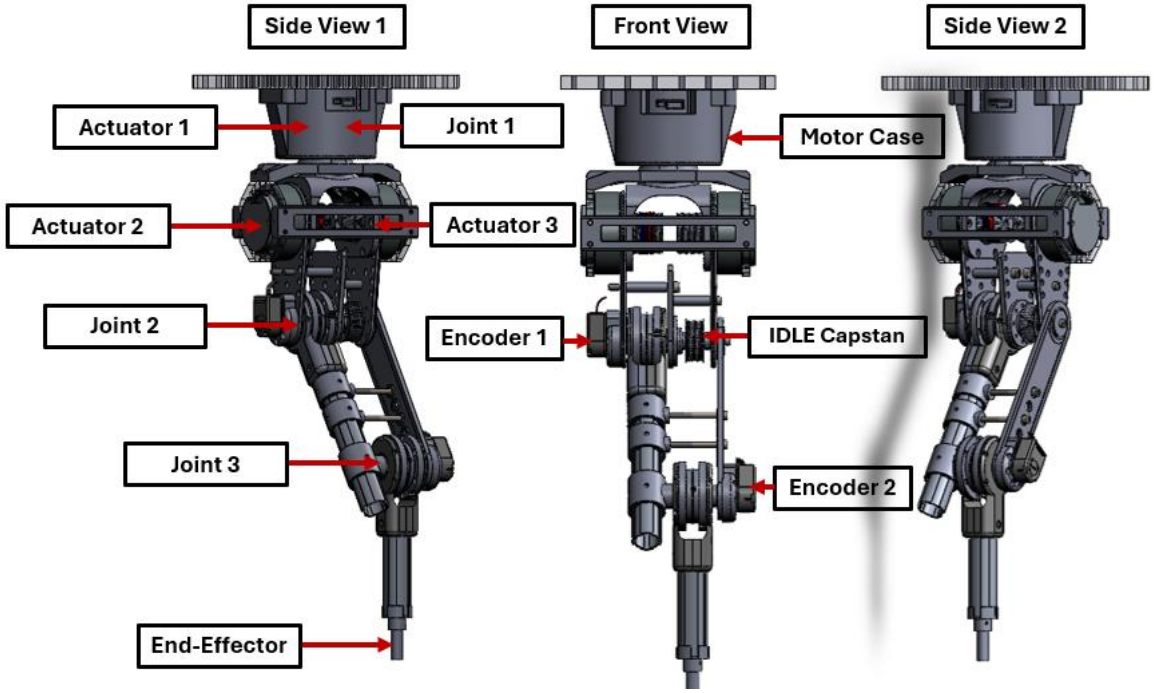
Side View 1
Front View
Side View 2
Actuator 1
Joint 1
Actuator 2
Actuator 3
Joint 2
Joint 3
End-Effector
Motor Case
Encoder 1
IDLE Capstan
Encoder 2

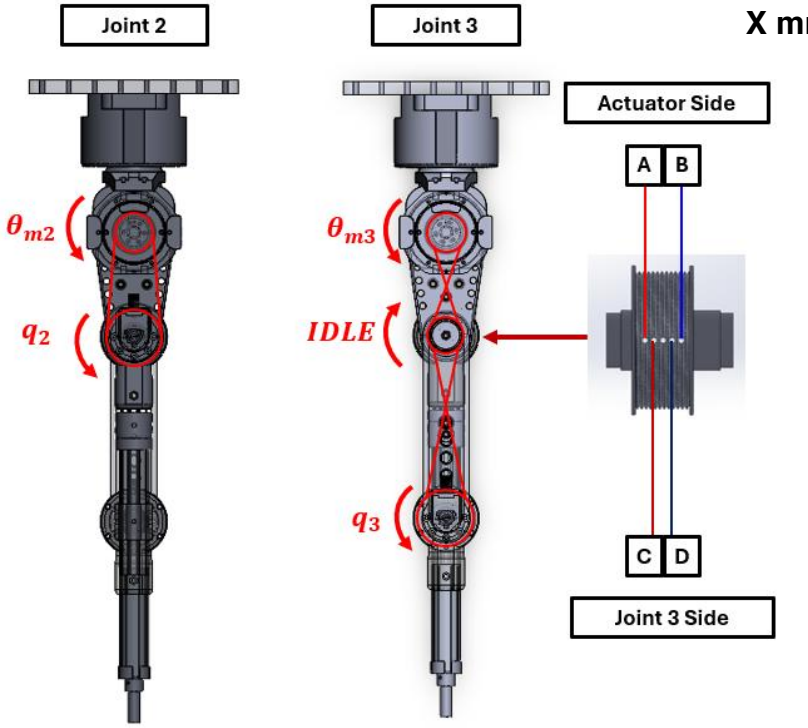
Joint 2
Joint 3
Actuator Side
θ_{m2}
q_2
θ_{m3}
IDLE
q_3
A
B
C
D
Joint 3 Side

2024 JUL – 2024 DEC

Hyundai Motor Group Innovation Center (HMGICS)

Robotics Engineering Internship

- **Designed passive mechanical alignment** mechanisms **for complex fastener geometries** used in a robotic assembly line, achieving **pose consistency** without vision or active sensing.
- **Developed & enhanced robotic tooling and fixtures:** gripper fingers, alignment jigs, and sensor couplers, using SolidWorks. Validated designs through stress analysis and rapid prototyping cycles.
- **Integrated custom mechanical subsystems** into **ABB robotic automation cells**, supporting **pick-and-place** operations through RAPID programming, simulation, and system-level testing.
- **Built experimental test rigs using industrial robot arms** to evaluate material durability and fixture performance, enabling data-driven mechanical design refinement.
- **Collaborated with R&D teams** to transition robotic assembly tooling from prototype to production, contributing to automation improvements targeting major operational cost reduction.
- **Explored & validated robotic motion planning and mechanical designs** across simulation and physical hardware environments.

(detailed metrics & design asset confidential)

2026

End-To-End Conceptual Design of Automated Coconut Vending Machine

1. **Automatically load coconut into the machine**
2. **Empty the juice inside the container**
3. **Open the coconut**
4. **Carve out the flesh into the same container**

Performed Analysis:

- NC machining tool paths simulation
- Dynamic motion analysis of the machine
- Engineering drawing of parts to be manufactured

SolidWorks View

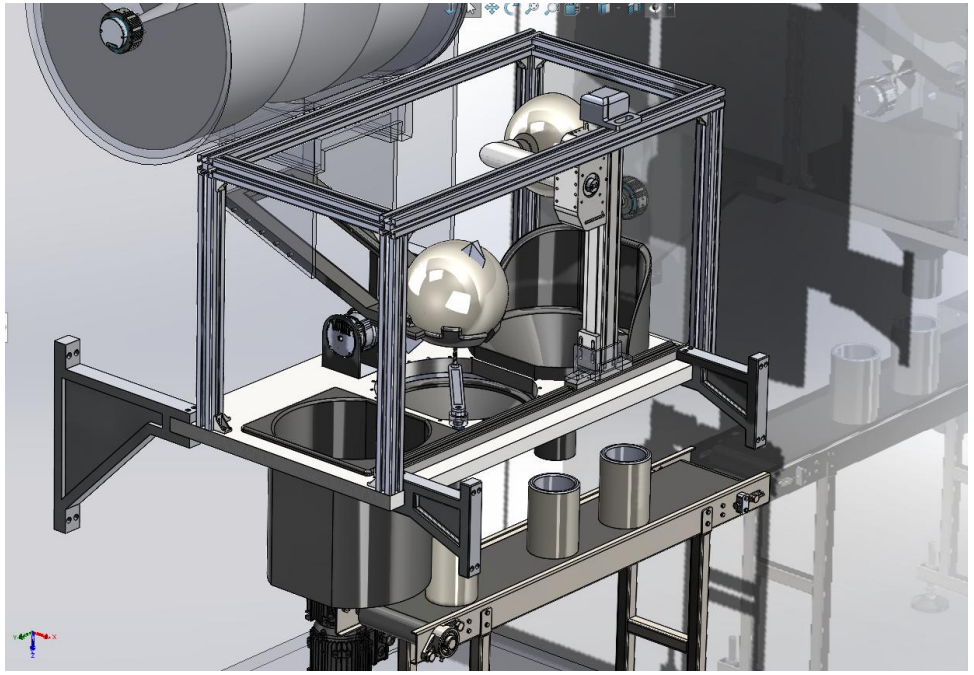

Rendered View

Exploded View

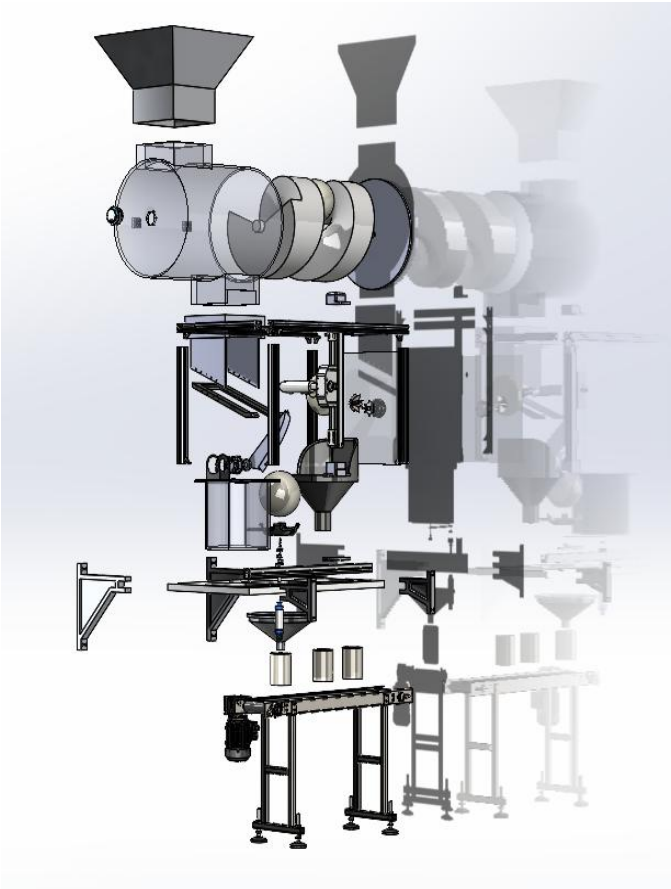

Assembly View

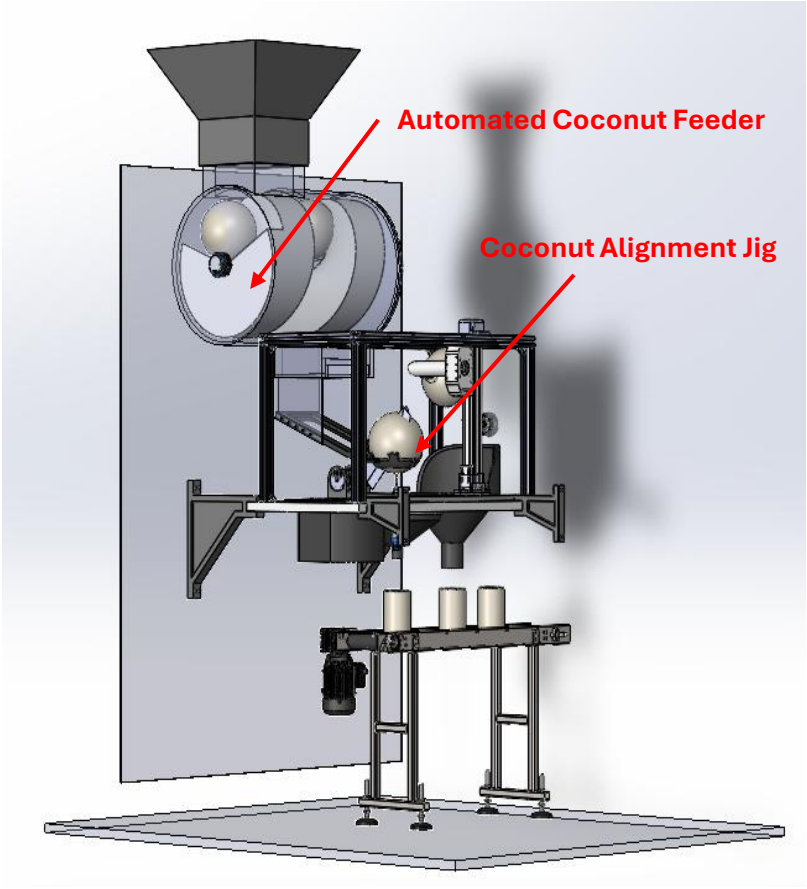

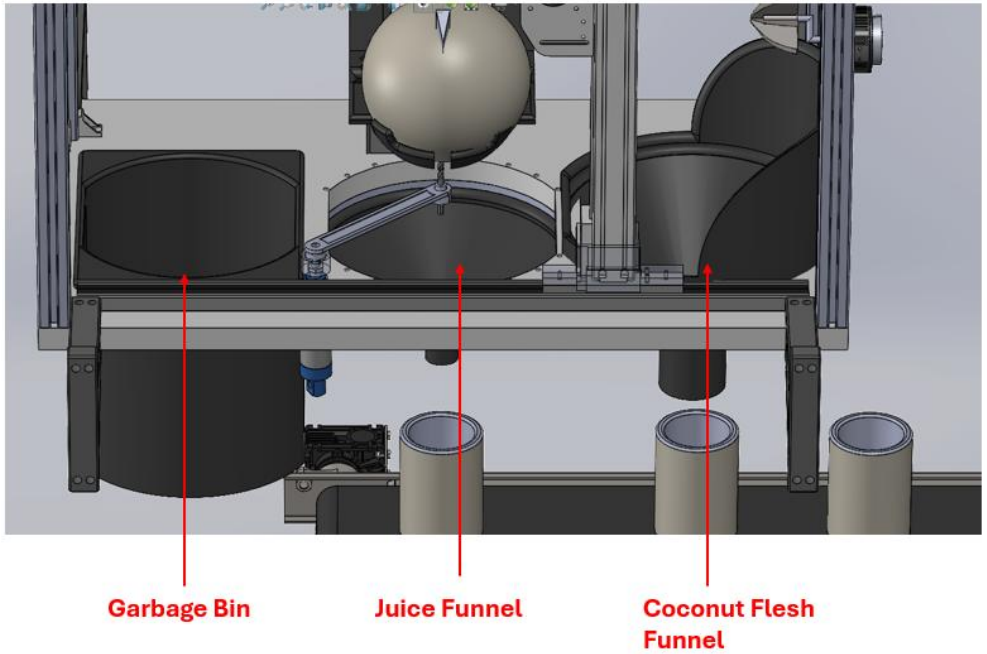

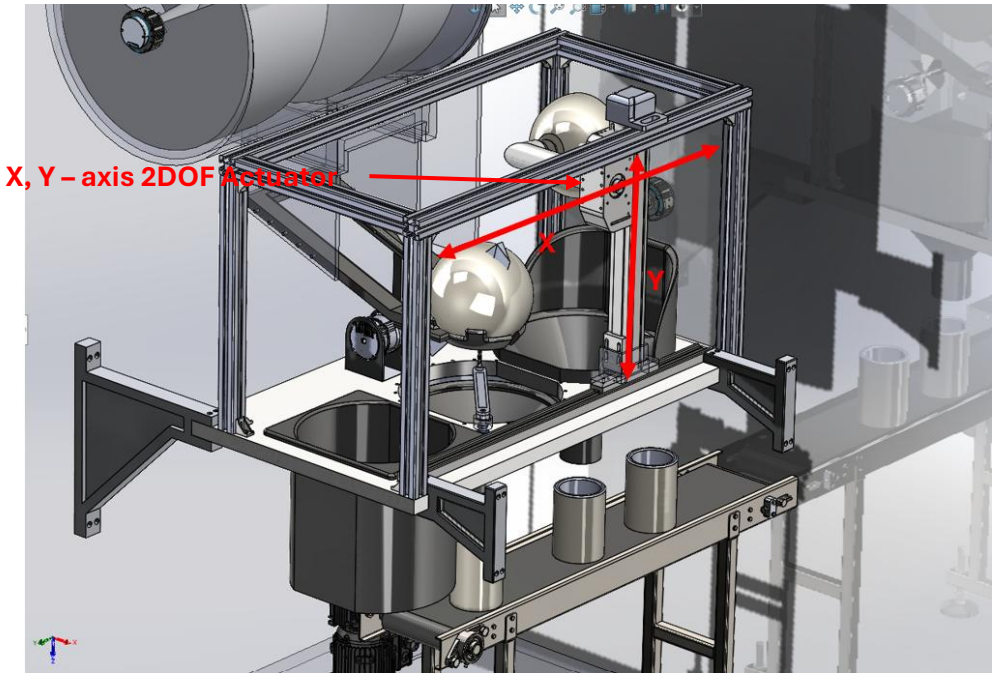

Automated Rapid Ball Picking Robot

2026

NTU MECHATRONICS DESIGN & ROBOTICS COMPETITION

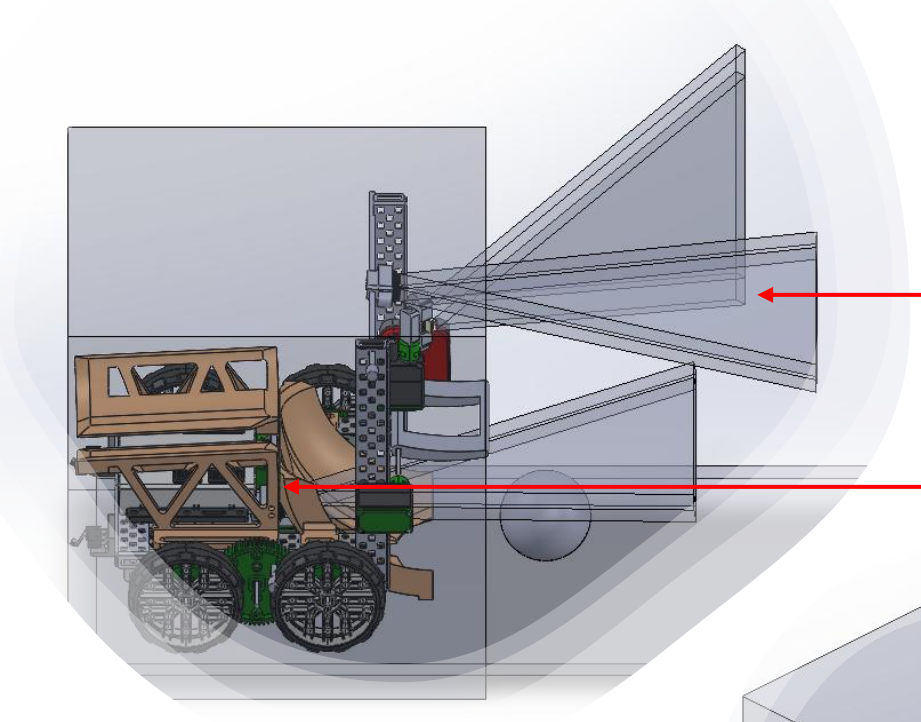

FOV design to ensure no interference with vision

Lowered COM Location (structurally robust)

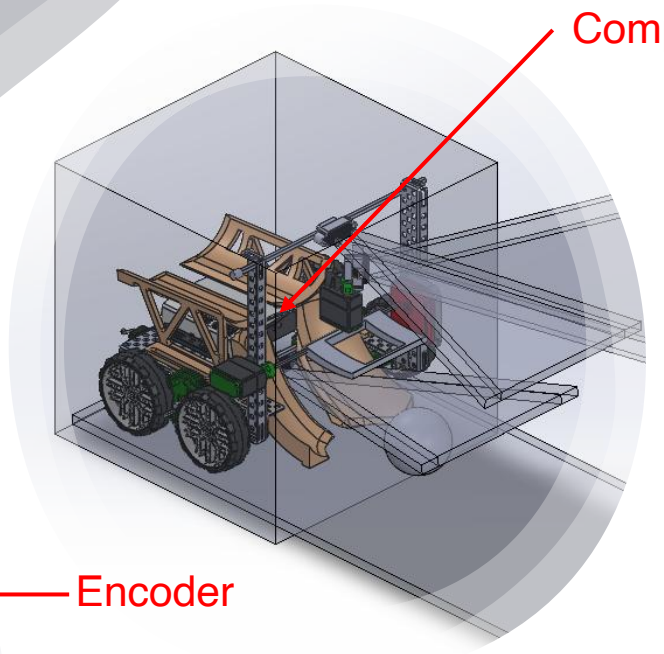

Complete Internal Cable Management

Ball Guidance Rail

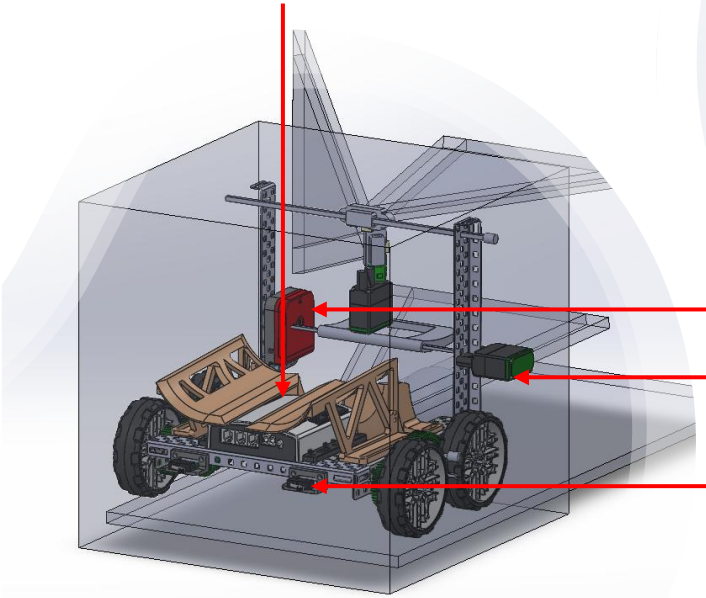

Encoder

Motor

Limit Switches for Obstruction Detection

Design Considerations

- Simplicity (removal of redundancy & unnecessary complications)
- Goal Driven
- Compactness
- Robustness
- Cost efficient
- Time efficient (Suitable for rapid prototyping and ease of adjustments according to feedback)
- Aesthetics (Consideration of symmetry, golden ratios, and sleekness of the design)

ABB RobotStudio Path Planning Demonstration

2025

Unstructured item sorting, generating optimized RAPID routines to reduce cycle time.

Designed pickable objects and environment tooling in CAD.

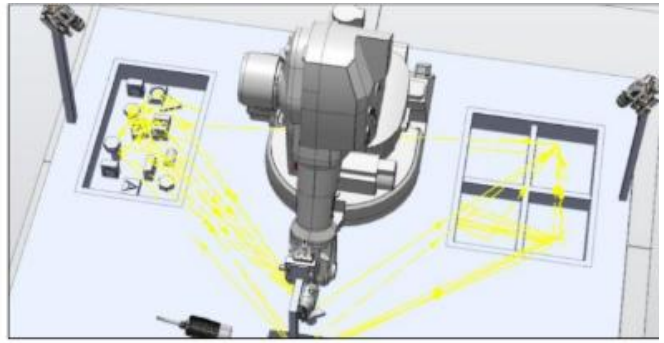

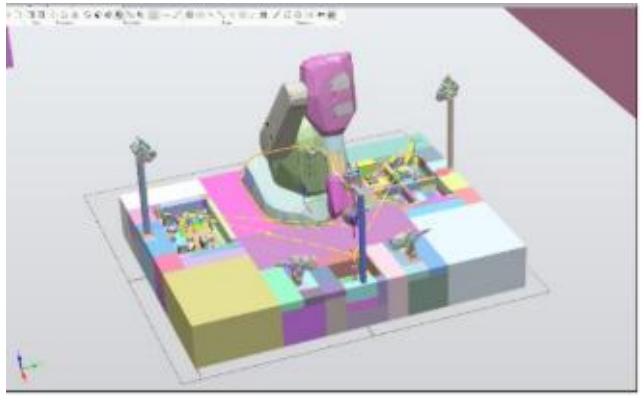

Home Position
Move J

↓

Pick Pose Estimation
Identify graspable object and it's 6d pose in input tray

↓

Pick Motion Sequence
1. Approach to target object
2. Grasp target object
3. Retreat from target objectPos

↓

Inspection Motion Sequence
1. Approach Inspection Module
2. Take 2 set of side images of the object
3. Place object on vacuum holder
4. Take top image of the object
5. Pick up the object from vacuum holder

↓

Process Inspection
Process classification and defect analysis of the object using taken images

↓

Place Pose Estimation
Identify safe 6D place pose to inside corresponding output tray index

→ **IF last object from input tray:**
Execute same placement logic and move to "HOME"

→ **IF classification result is SQUARE A:**
1. Approach output tray index 1
2. Place picked object in estimated place pose
3. Retreat from ouput tray index 1

→ **IF classification result is SQUARE B:**
1. Approach output tray index 2
2. Place picked object in estimated place pose
3. Retreat from ouput tray index 2

→ **IF classification result is SQUARE C:**
1. Approach output tray index 3
2. Place picked object in estimated place pose
3. Retreat from ouput tray index 3

→ **IF classification result is SQUARE D or HEXAGON or TRIANGLE or CYLINDER:**
1. Approach output tray index 4
2. Place picked object in estimated place pose
3. Retreat from ouput tray index 4

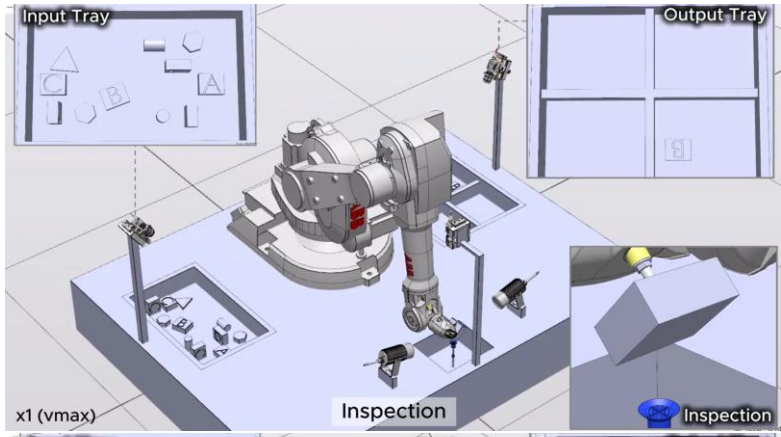

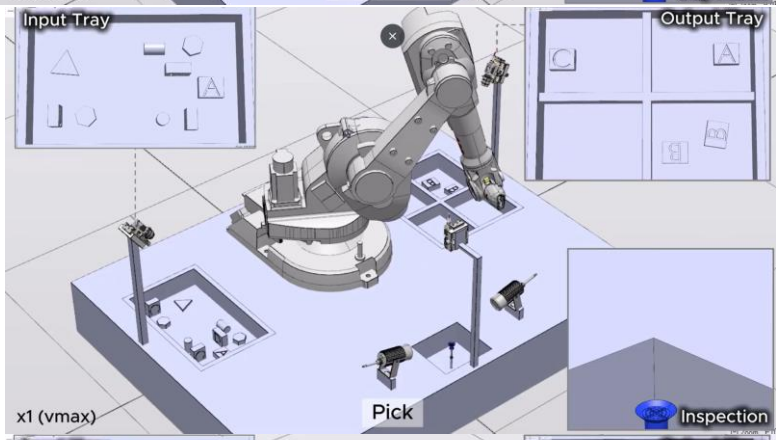

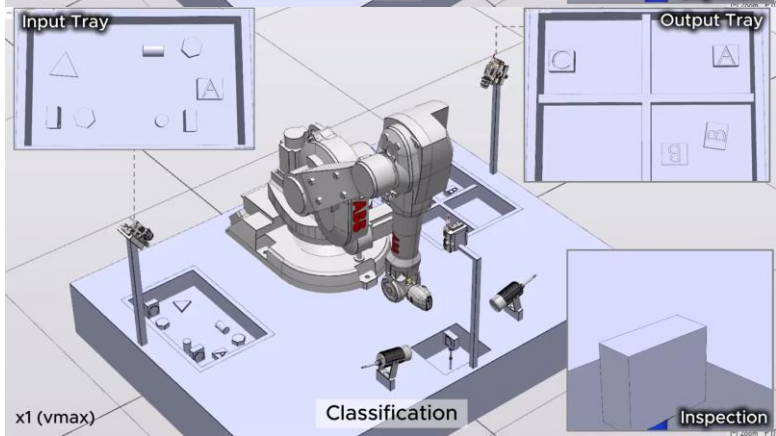

NTU MECATRON Team Autonomous Underwater Robot 2024-2025

SINGAPORE AUV CHALLENGE COMPETITION 1ST PLACE

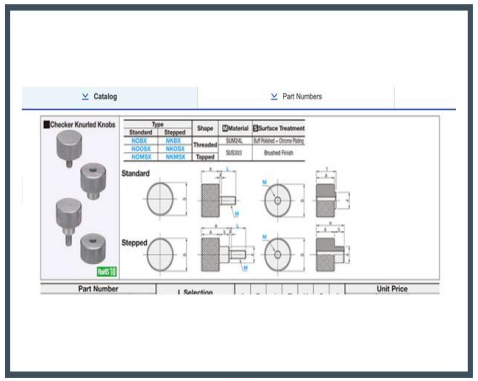
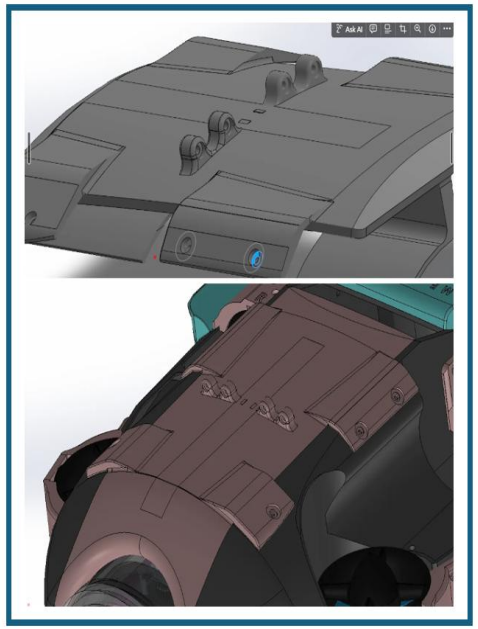

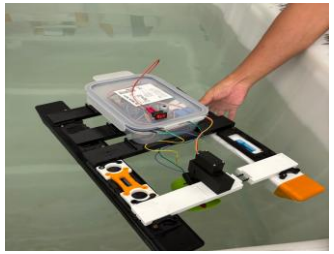

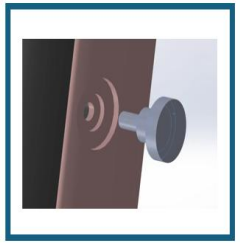

1. Mechanical Design

- Mechanical Design of the Underwater Robot Shell
- Focused on waterproofing methods + convenience for assembly and disassembly

2. Workshop Demonstration

- Designed and fabricated a **modular underwater robot platform** optimized for educational workshops.
- Helped engineer the mechanical structure for **rapid assembly and disassembly**, allowing students to gain hands-on experience with actuation, waterproofing, and mechatronic integration.

Space Hackathon 2022

3rd PLACE / 30 + TEAMS AWARDED BY NASA JEFFREY WILLIAMS

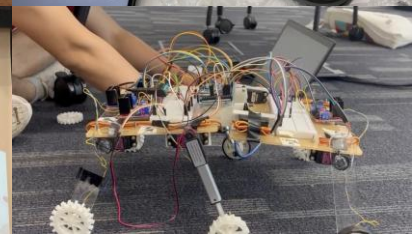

- Designed and prototyped a lunar rover prototype capable of overcoming crater slopes up to 45° within an $800 development budget.
- Engineered mechanical architecture and traction system to maintain stability on steep terrain.

URECA Research 2022

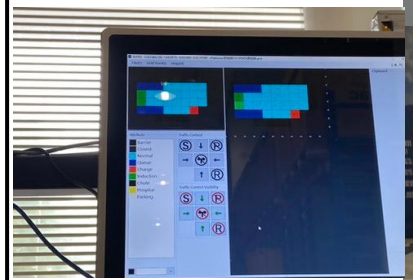

- Research on the path planning of automated ground vehicles (AGV)
- Use of gazebo, URDF modeling, ROS1 to plan AGV trajectories
- Visit to HAI Robotics & SIT to explore and learn their approach on AGV path planning