END-TO-END CONTROL SYSTEMS & MECHATRONICS DESIGN (CABLE-DRIVEN MANIPULATOR)

2025 MAY- 2026 MAY

(SINGLE JOINT CONTROL VALIDATION)

- 10+ Design iterations to optimize cable routing and joint efficiency.
- Real-time CAN-Bus network control for motors
- Implementation of **closed-loop impedance control + gravity compensation feed forward**
- Cable-driven joint accuracy of **>95%** (read implementing joint encoder
- Full mathematical modelling of the cable-driven joint

SolidWorks View

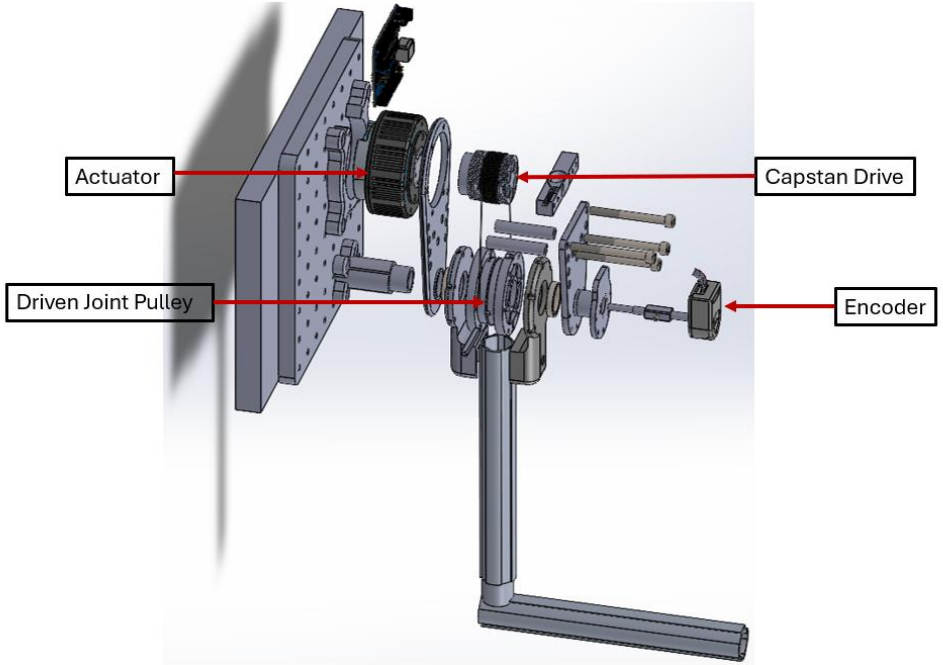

Rendered View

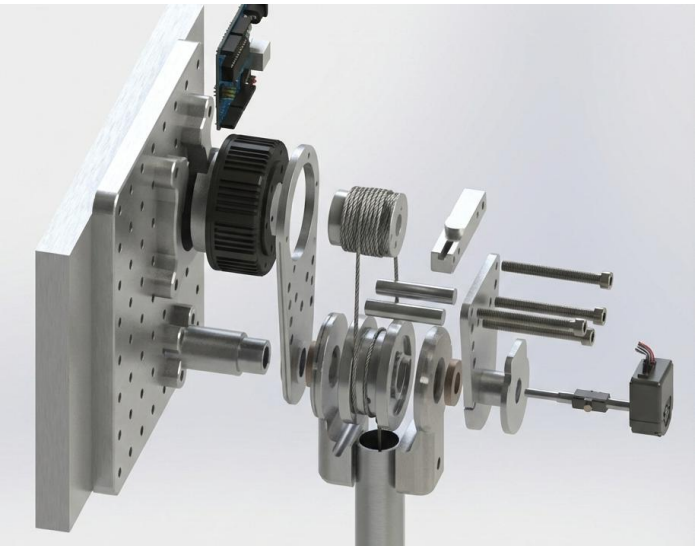

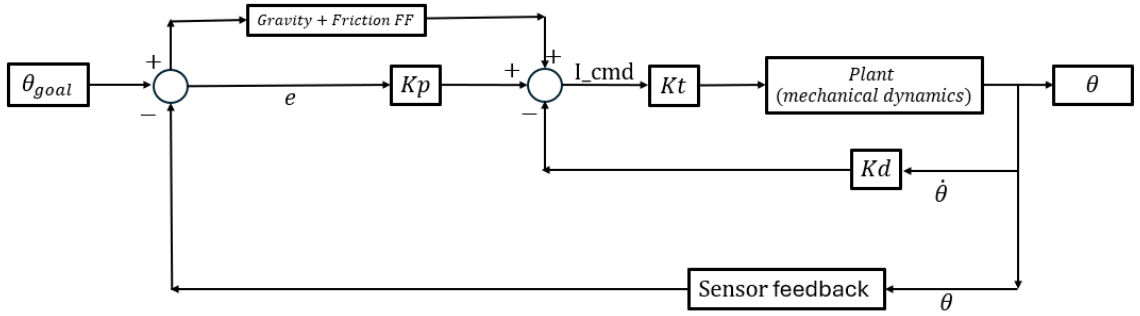

(full detailed metrics confidential)

EXPANSION INTO MULTIPLE–DOF TORQUE–CONTROLLED CABLE-DRIVEN MANIPULATOR (In Progress)

Goal: To perform precision insertion tasks with the needle attached to the end-effector, utilizing torque control.

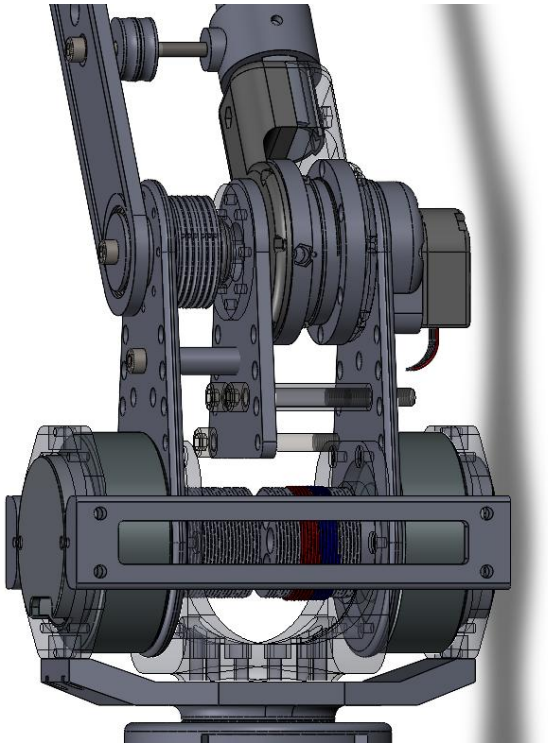

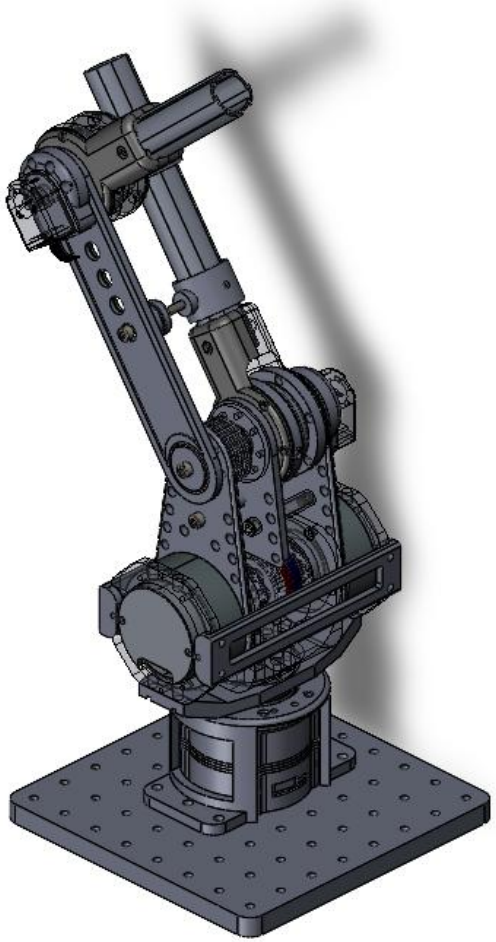

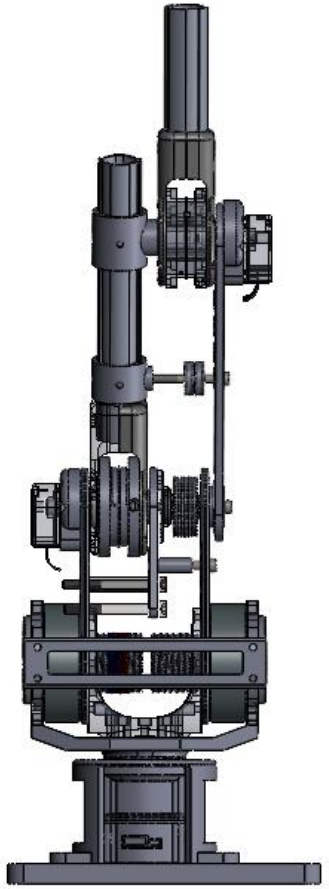

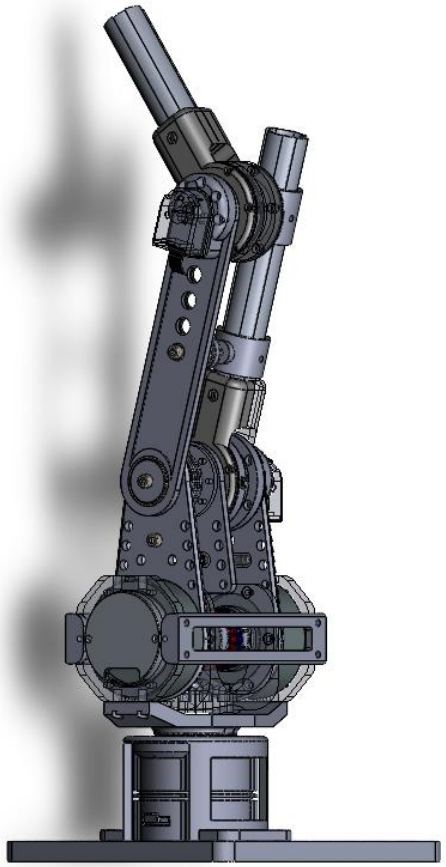

(full detailed metrics confidential)

2026

End-To-End Conceptual Design of Automated Coconut Vending Machine

1. **Automatically load coconut into the machine**
2. **Empty the juice inside the container**
3. **Open the coconut**
4. **Carve out the flesh into the same container**

Performed Analysis:

- NC machining tool paths simulation
- Dynamic motion analysis of the machine
- Engineering drawing of parts to be manufactured

SolidWorks View

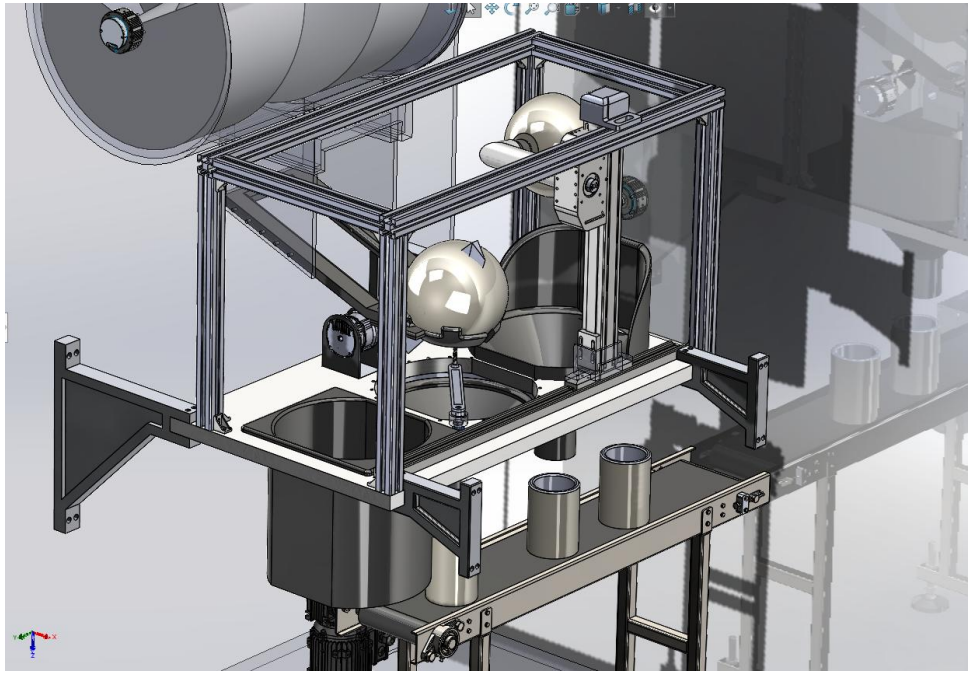

Rendered View

Exploded View

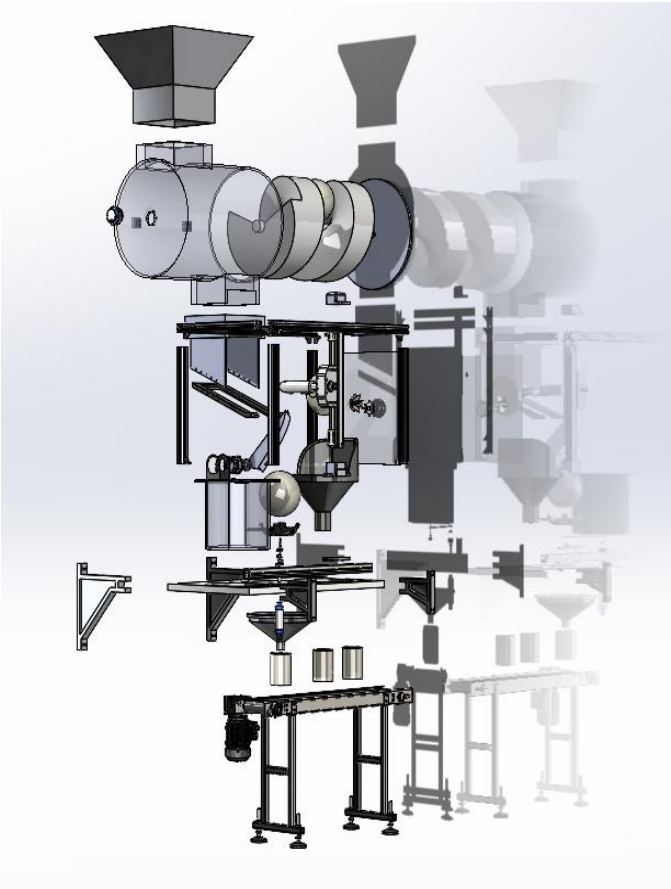

Assembly View

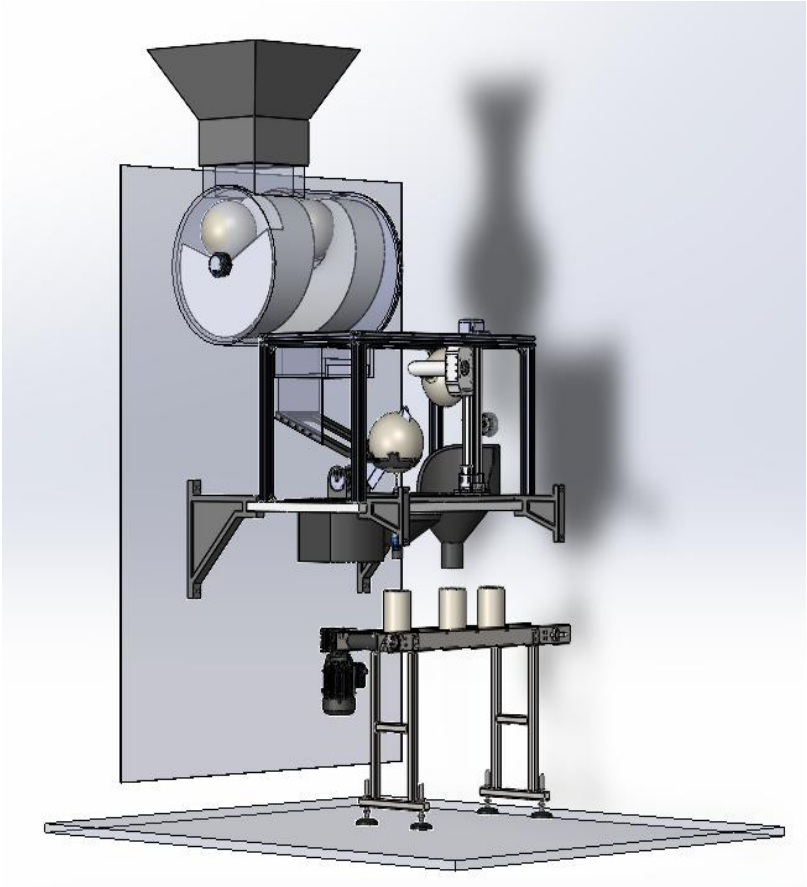

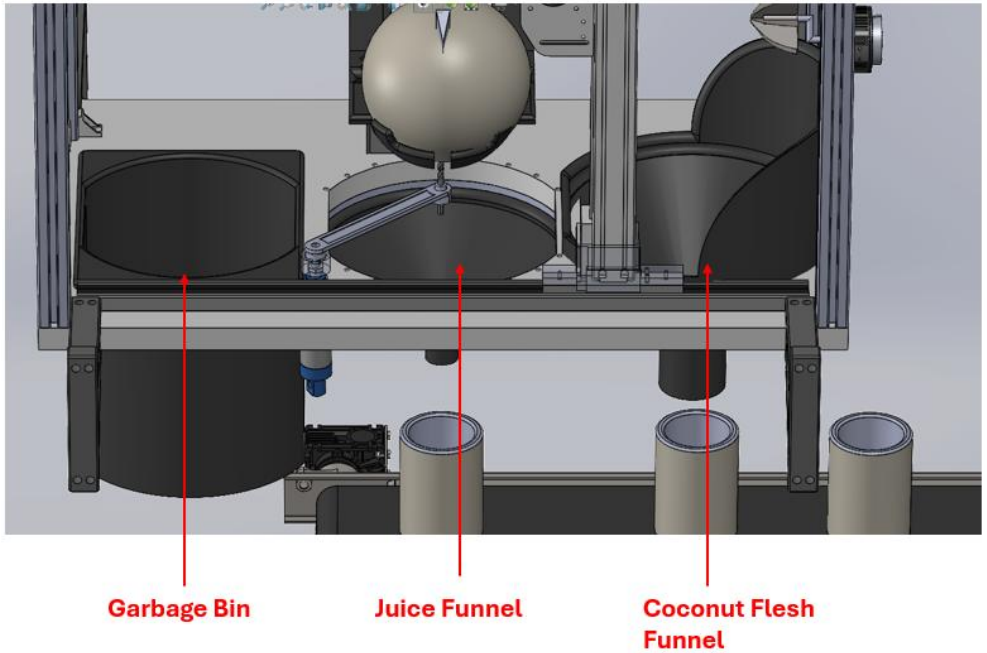

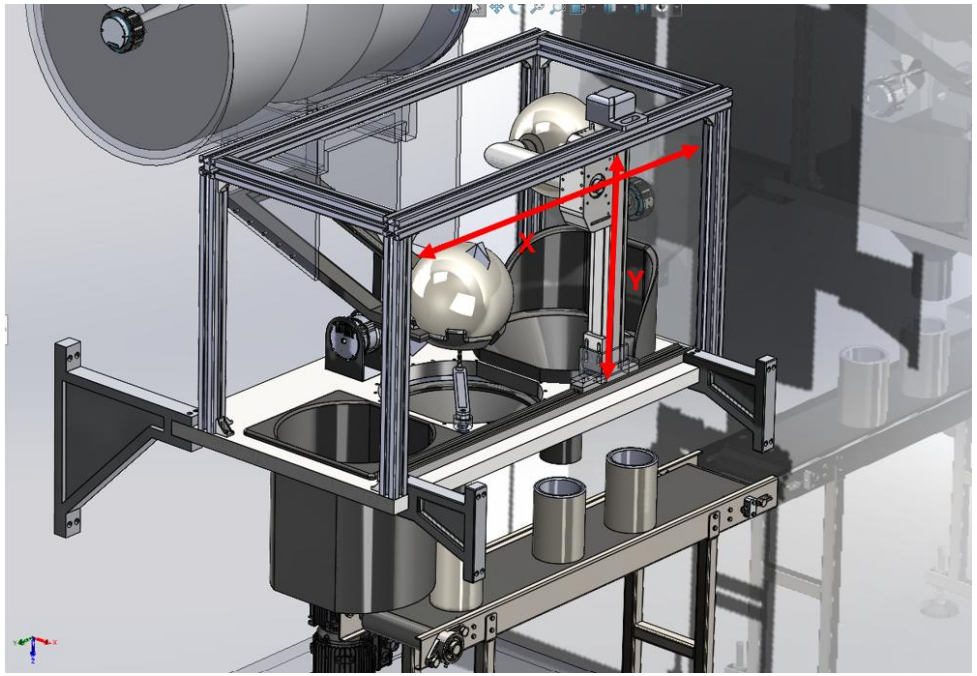

Automated Rapid Ball Picking Robot

2026

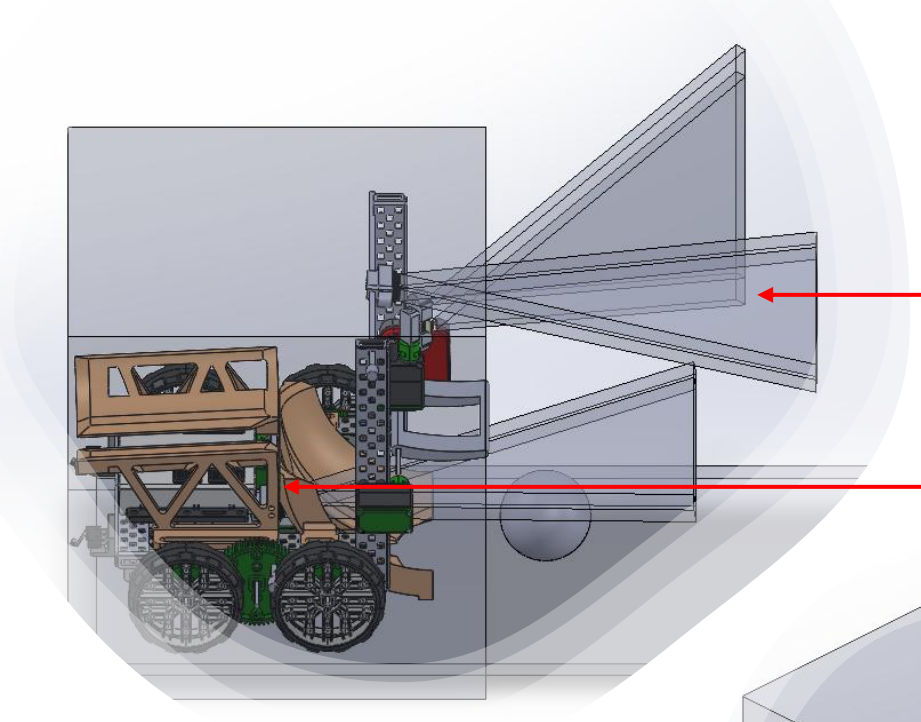

FOV construction to ensure no interference with vision

Lowered COM Location (structurally robust)

Complete Internal Cable Management

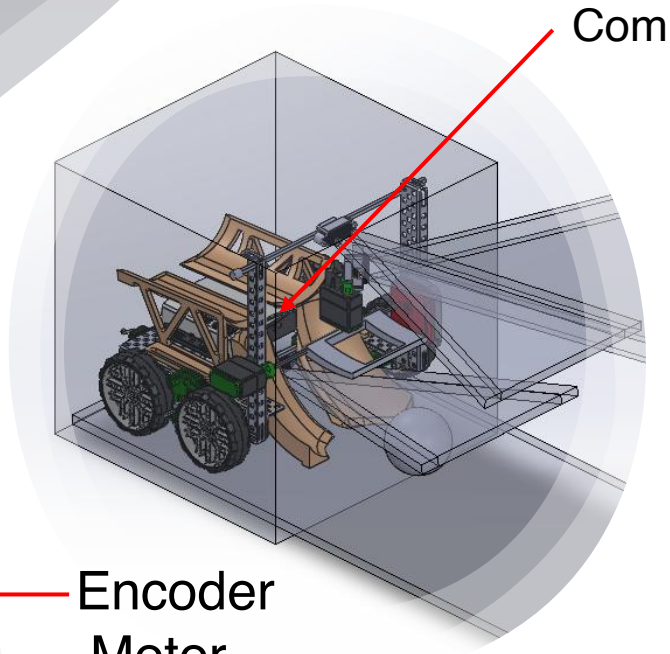

Ball Guidance Rail

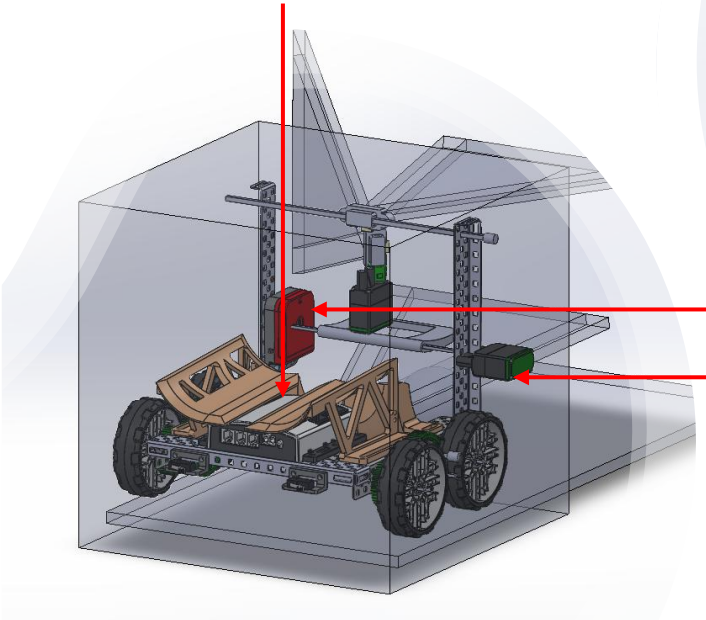

Encoder

Motor

Design Considerations

- Simplicity (removal of redundancy & unnecessary complications)
- Goal Driven
- Compactness
- Robustness
- Cost efficient
- Time efficient (Suitable for rapid prototyping and ease of adjustments according to feedback)
- Aesthetics (Consideration of symmetry, golden ratios, and sleekness of the design)

2025

ABB RobotStudio Path Planning Demonstration

Unstructured item sorting, generating optimized RAPID routines to reduce cycle time.

Designed pickable objects and environment tooling in CAD.

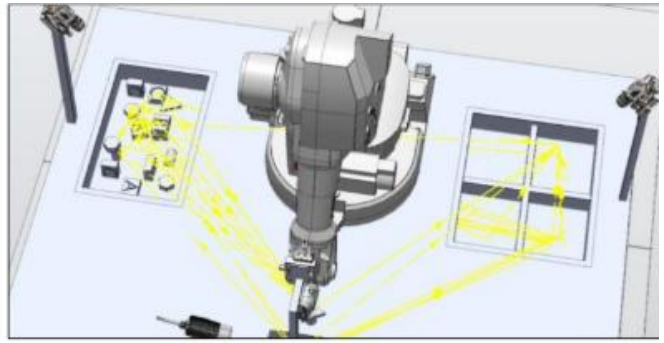

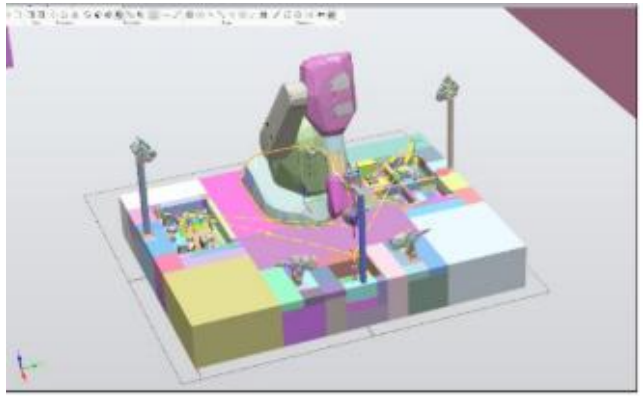

Home Position
Move J

↓

Pick Pose Estimation
Identify graspable object and it's 6d pose in input tray

↓

Pick Motion Sequence
1. Approach to target object
2. Grasp target object
3. Retreat from target objectPos

↓

Inspection Motion Sequence
1. Approach Inspection Module
2. Take 2 set of side images of the object
3. Place object on vacuum holder
4. Take top image of the object
5. Pick up the object from vacuum holder

↓

Process Inspection
Process classification and defect analysis of the object using taken images

↓

Place Pose Estimation
Identify safe 6D place pose to inside corresponding output tray index

→ **IF last object from input tray:**
Execute same placement logic and move to "HOME"

→ **IF classification result is SQUARE A:**
1. Approach output tray index 1
2. Place picked object in estimated place pose
3. Retreat from ouput tray index 1

→ **IF classification result is SQUARE B:**
1. Approach output tray index 2
2. Place picked object in estimated place pose
3. Retreat from ouput tray index 2

→ **IF classification result is SQUARE C:**
1. Approach output tray index 3
2. Place picked object in estimated place pose
3. Retreat from ouput tray index 3

→ **IF classification result is SQUARE D or HEXAGON or TRIANGLE or CYLINDER:**
1. Approach output tray index 4
2. Place picked object in estimated place pose
3. Retreat from ouput tray index 4

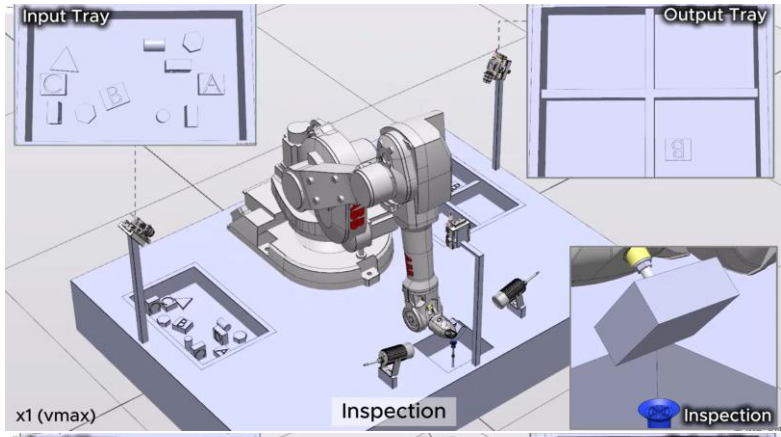

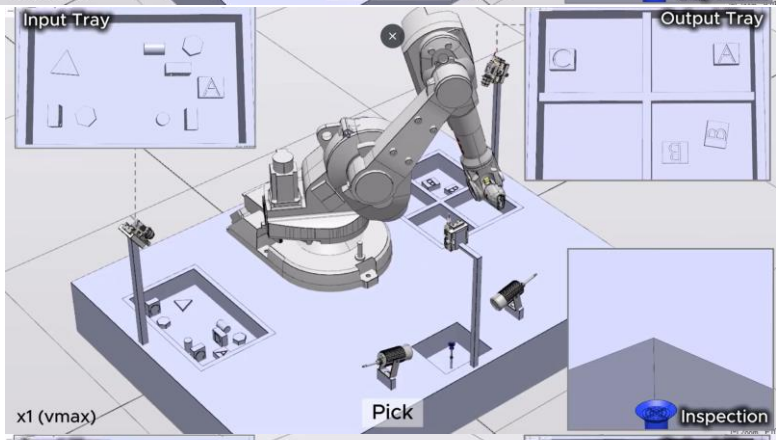

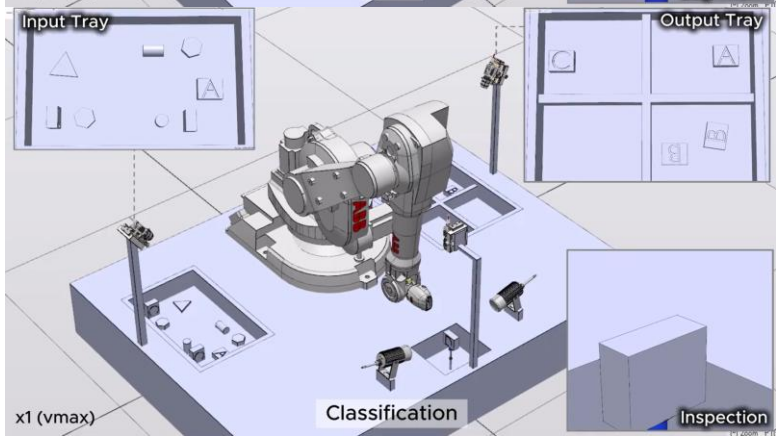

2024 JUL – 2024 DEC

Hyundai Motor Group Innovation Center (HMGICS)

Robotics Engineering Internship

- **Designed passive mechanical alignment** mechanisms **for complex fastener geometries** used in a robotic assembly line, achieving **pose consistency** without vision or active sensing.
- **Developed & enhanced robotic tooling and fixtures:** gripper fingers, alignment jigs, and sensor couplers, using SolidWorks. Validated designs through stress analysis and rapid prototyping cycles.
- **Integrated custom mechanical subsystems** into **ABB robotic automation cells**, supporting **pick-and-place** operations through RAPID programming, simulation, and system-level testing.
- **Built experimental test rigs using industrial robot arms** to evaluate material durability and fixture performance, enabling data-driven mechanical design refinement.
- **Collaborated with R&D teams** to transition robotic assembly tooling from prototype to production, contributing to automation improvements targeting major operational cost reduction.
- **Explored & validated robotic motion planning and mechanical designs** across simulation and physical hardware environments.

(detailed metrics & design asset confidential)

NTU MECATRON Team Autonomous Underwater Robot

2024-2025

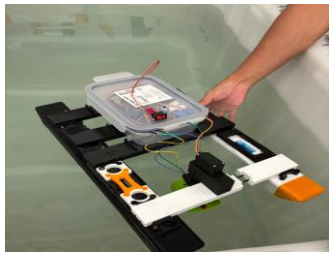

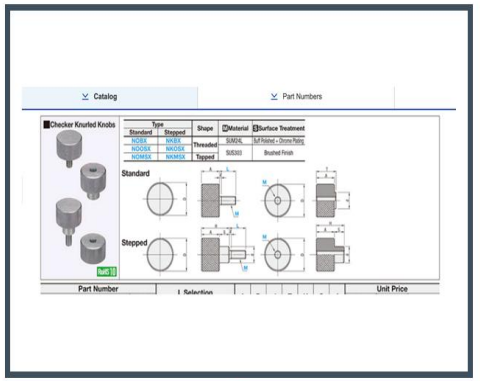

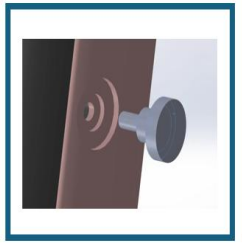
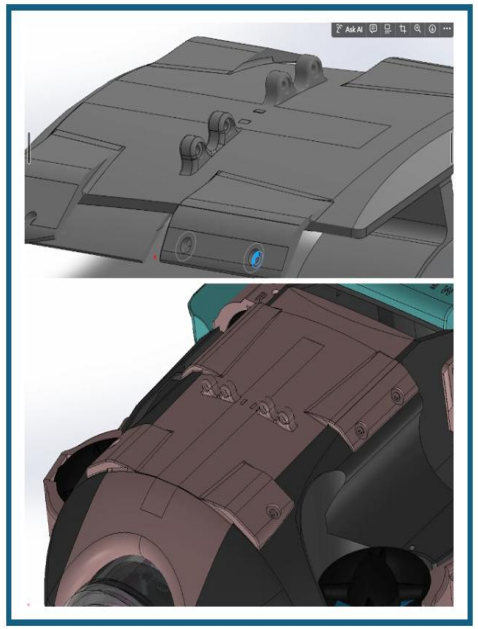

1. Mechanical Design

- Mechanical Design of the Underwater Robot Shell
- Focused on waterproofing methods + convenience for assembly and disassembly

2. Workshop Demonstration

- Designed and fabricated a **modular underwater robot platform** optimized for educational workshops.
- Helped engineer the mechanical structure for **rapid assembly and disassembly**, allowing students to gain hands-on experience with actuation, waterproofing, and mechatronic integration.

Space Hackathon

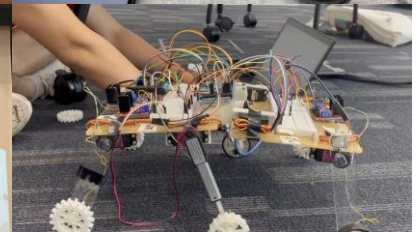

- Designed and prototyped a lunar rover prototype capable of overcoming crater slopes up to 45° within an $800 development budget.
- Engineered mechanical architecture and traction system to maintain stability on steep terrain.

URECA Research

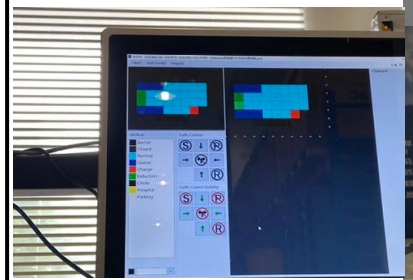

- Research on the path planning of automated ground vehicles (AGV)
- Use of gazebo, URDF modeling, ROS1 to plan AGV trajectories
- Visit to HAI Robotics & SIT to explore and learn their approach on AGV path planning