THE BREZHNEVFONE

ROGER KOENKER

1. Introduction

Inspired by a blog post of Alasdair Allan[1] I set out several months ago to try to reproduce a version of this for my wife's desk.[2] This got off the ground slowly. I bought a GPO 746 like Alasdair's, and even in its original totally non-functional state it was widely admired by visitors to her office. I also obtained a AIY Google Voice Bonnet (V2) with pi0 on a trip to the U.S. last Christmas. Assembly of the Voice kit went smoothly and it ran the demos provided as expected. Things stalled for a while, but the new Covid-19 confinement policies provided an inducement to bring the phone back home and to get started in earnest with the project. So I disassembled it and first tested that I could reroute the speaker wires from the V2 to the handset of the phone; this worked fine, which created a false sense of accomplishment. It is perhaps worth saying at this point that the basic setup of the kit and the linux aspects of the software installation were familiar enough to me. But the next tasks involved rewiring and this was totally foreign territory. I hadn't held a soldering iron since assembling a Heath Kit FM radio in high school in the 1960s. On the other hand that was the point of the venture – to learn something new. And after all how complicated could it be to reroute a couple of switches?

The next task seemed to be to replace the button of the V2 with some sort of connection to the dialer mechanism of the phone. At this point I realized first, that the dialer mechanism on my GPO746 was different from Alasdair's, and second that the V2 button was also different than his V1 button. The dialer problem seemed benign, it seemed that Alasdair's strategy of ignoring the mechanism except for the micro-switch that indicated the initiation of dialing should work.[3] The dialer mechanism is illustrated in Figure 1.

So I began futzing around with replacing the button. When my initial attempts to imitate Alastair's V1 solution failed, I resorted to trying to imitate other wiring schemes for other 3 leds. Of course I have no idea what sort of led setup exists in the V2 button, although having run the demo **leds_example.py** there is obviously some fancy stuff that potentially can go on in there, RGB colors can be mixed, dimmed etc etc. The pinouts for the button harness on the V2 are illustrated in Figure 2

My first attempt to explore the button mechanism was to create a simple "traffic light" circuit with 3 leds and a push button as as illustrated in the photo in Figure 3. This was my naive attempt to mimic the schematic in the diagram in Figure 4, without the two left-most leds. This produced no response from the leds when running the led example demo.

My second idea was leave the V2 button connected to the bonnet but connect the 5V and BTN pins of the bonnet to the terminals of the dialer switch. This also produced no result from the button leds either with or without engaging the dial mechanism. It was probably too much to expect that the dialer switch would mimic a button press, but I thought at least the led demo might still work, in some sense of the word work.

It seems that there isn't a lot of guidance on the web about the V2 Google Voice Bonnet, nor is it widely available, it seems. So the project is stalled until I get further advice.

[1] `https://medium.com/@aallan/a-retro-rotary-phone-powered-by-aiy-projects-and-the-raspberry-pi-e516b3ff1528`

[2] She is Director of the School of Slavonic Studies at UCL.

[3] I'm still wondering about whether my version of the phone might produce a digital output of the dialing since the terminals on the ribbon connector are labeled C1-4 and R1-4 like a keypad, but this is for much later, aka never.

FIGURE 1. The dialer mechanism of my GPO746 with two leads soldered to the terminals of the micro-switch.

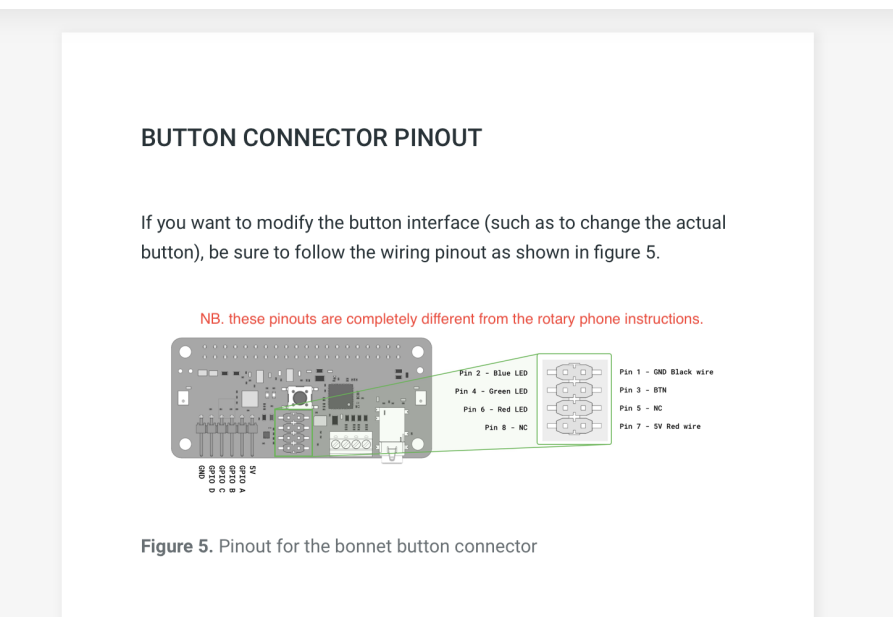

BUTTON CONNECTOR PINOUT

If you want to modify the button interface (such as to change the actual button), be sure to follow the wiring pinout as shown in figure 5.

NB. these pinouts are completely different from the rotary phone instructions.

Figure 5. Pinout for the bonnet button connector

FIGURE 2. Pinouts for AIY Google Voice Bonnet V2

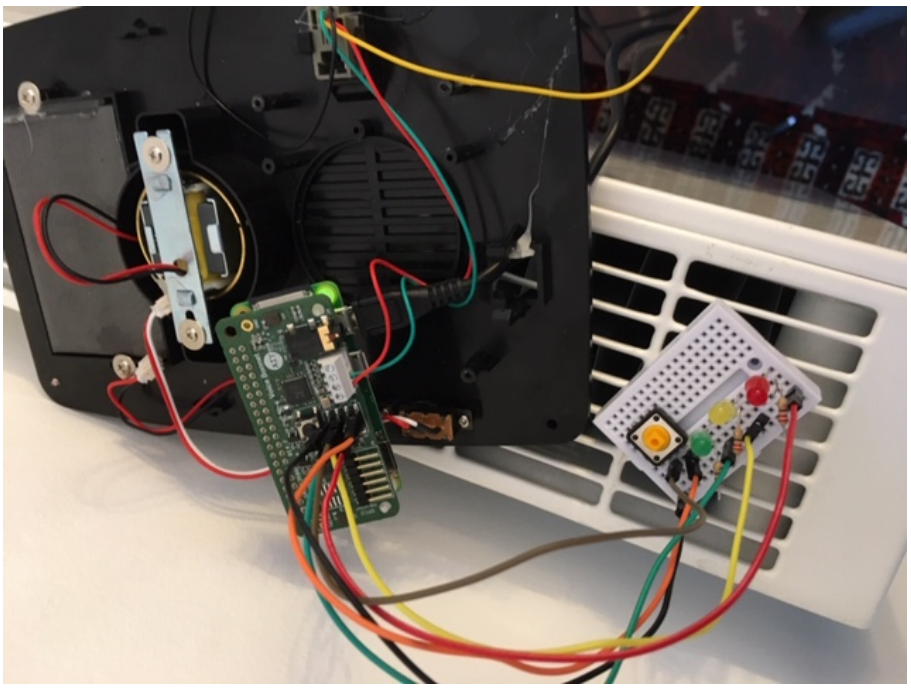

FIGURE 3. My unsuccessful "traffic light" breadboard intended to mimic the V2 button

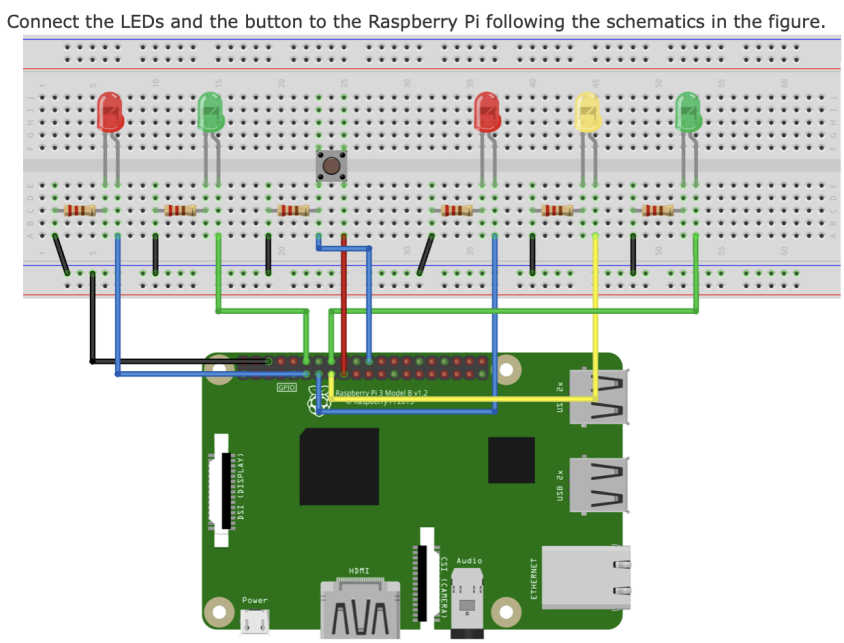

FIGURE 4. The schematic that I tried to follow to make the button circuit.