The Doughboys Network: Social Interactions and Labor Market Outcomes of World War I Veterans

Ron Laschever*
Northwestern University

November 12, 2005

Abstract

This paper examines the effect of social networks on the post-war employment of American WWI veterans. The groups I examine were all formed due to a quasi-random event, the WWI draft. Service in the same military unit defines an individual's reference group. I construct a new dataset where I observe all members of each group and link the veterans to the Census of 1930. In addition, I obtain their pre-war outcomes for use as a control. I find that a group's unemployment rate has a negative effect on a veteran's own likelihood of being employed. For example, in the 1930 census, the marginal effect of a 10-percentage-point increase in his peers' unemployment rate, all else equal, decreases a veteran's likelihood of employment by three to four percentage points. I then introduce a new framework which allows for further decomposing the effect into its two components, the *endogenous* ("the effect of others' outcomes"), and the *contextual* ("the effect of others' characteristics"). I show that the two effects are separately identified, provided that some people belong to more than one group. The framework is applicable in other settings, since in many cases individuals are potentially affected by multiple circles of influence (e.g., neighborhood and family, or high school and college). I demonstrate an application of this framework using for each of the veterans in the sample two types of reference groups, those who had served with him during WWI, and a group of his closest (in terms of distance) neighbors in the 1930 census. I find the endogenous effect to be much stronger than the contextual effect.

*I am grateful to Joseph Ferrie, Christopher Taber, and especially Dale Mortensen for their guidance, encouragement, and patience. I also thank Ran Abramitzky, Evelyn Asch, Raquel Bernal, Charles Brown, Michael Coates, Greg Duncan, Ann Janda, Hilarie Lieb, Charles Manski, Rosa Matzkin, Guido Menzio, Joel Mokyr, Francesca Molinari, Eugene Orlov, Enrichetta Ravina, Elie Tamer, Burt Weisbrod, and Martin Zelder for discussions and comments. Lindsay Larsen, Karen Muth, and David Schaaf provided excellent assistance with the data collection. Financial Support through Northwestern University's Graduate School Research Grant and the Center for Population Economics at the University of Chicago (subgrant NIH P01AG10120) is gratefully acknowledged. All errors are mine. Comments welcome at r-laschever@northwestern.edu. Web: http://pubweb.northwestern.edu/~ral403

"Your face is familiar," he said, politely. "Weren't you in the Third Division during the war?"
"Why, yes. I was in the ninth machine-gun battalion."
"I was in the Seventh Infantry until June nineteen-eighteen. I knew I'd seen you somewhere before."

-F. Scott Fitzgerald, *The Great Gatsby*, 1925

1 Introduction

In recent years, economists have examined the effect of social interactions in a wide range of areas.[1] In the labor market, various surveys have documented the importance of the "informal" channel, that is finding jobs through friends and relatives.[2] The goal of this paper is to better understand how social networks affect labor market outcomes by examining groups which were formed involuntarily due to a quasi-random event. In addition, it introduces and illustrates an application of a new methodology for decomposing the social effect into its two components, the *endogenous* and the *contextual* effects.

I construct a new dataset of American men who were drafted and served together during World War I (1917-1919), and use it to examine the effect of networks formed during the war on post-war (1930) likelihood of employment. The setting I consider allows me to address some of the critical issues faced by many empirical studies of social influence and peer effects. The three primary advantages of the setting I consider are that groups were formed due to an exogenous shock, that I observe all members of the groups (and these groups are well defined), and that I observe labor market outcomes of interest, such as employment.

In most instances, groups, or social networks, are formed endogenously. This in turn can lead to many potential problems in inference, a problem which is recognized by almost every empirical study. For example, consider a case in which individuals with a higher unobserved ability (to the researcher) choose to become members of groups with higher observed group characteristic (say, average level of education), then a straightforward estimation of the effect of the group characteristic will lead to biased results. As emphasized by Moffitt (2001), in the case of group interactions, correcting for this selection is even more challenging than the usual selection bias in the individual case. In contrast, I examine groups that were formed involuntarily due to an exogenous shock, America's decision to enter the war and its need to quickly raise a large army.[3]

Realizing the importance of having randomly assigned groups, researchers in recent years examined social interactions in various settings in which groups were randomly assigned. However, these studies focus on populations or outcomes which are somewhat specialized, be it recidivism among ex-cons, grades or drinking among college students, or the outcomes of welfare recipients.

[1] These range from theoretical work on network formation and network games (see Jackson (2004) for a survey of networks games) to the measurement of peer effects in such settings as welfare take-up (Bertrand et al. 2000), drug use among college students (Duncan et al. 2003), recidivism (Bayer et al. 2004), etc.

[2] Ioannides and Loury (2004) summarize a number of surveys which find that 30-60 percent of jobs (in various industries and of various statuses) are found through the "informal" channel. As early as 1923, De Schweinitz (1932) finds that 45% of workers in the hosiery industry in Philadelphia obtained their job through friends and relatives.

[3] While the WWI draft was a "natural experiment" (See Meyer (1995) for an overview of "natural experiments"), note that in this paper I only examine those who had served (those "treated").

The sample I examine represents an important segment of the labor market, namely, white males who were in their 30's and 40's in 1930.

The other advantage of the setting I consider is the fact that I observe the actual group memberships, and all members of the group. Further, the groups I examine had all experienced battle overseas and were likely to forge meaningful ties. While the standard economic datasets include a wealth of information on labor market outcomes, they lack information on group membership.[4] In those cases where surveys include additional information on the channel through which a job was obtained (for example, a neighbor, as opposed to an employment agency), ultimately, they can only be used to test various predictions or highlight the importance of a certain channel. Without further information on the actual group which led to the outcome, one cannot hope to further uncover the mechanism through which social interactions operate.

In the 1930 census, I find that a group's unemployment rate has an economically and a statistically significant effect on a veteran's own likelihood of being employed. The magnitude of the effect can be summarized as follows. All else equal, a 10-percentage-point increase in his peers' unemployment rate decreases a veteran's likelihood of employment by three to four percentage points. (Over 93% of the sample members are employed in the 1930 census; the unemployment rate among the entire male population was less than 10%).

I then provide robustness checks to address various concerns. For example, I examine what is the "correct" reference group, and find that larger groups, such as battalions (which consist of four military companies) have no statistically significant effect. I also find the employment outcomes of other military companies within the same regiment to have no statistically significant effect. I show that the company's group effect persists after controlling for prewar place of residence of the group's members by exploiting the variation in the groups' composition of prewar locations.

In the second part of the paper (Section 5), I further decompose the social effect by introducing a new framework, Multiple Reference Groups (MRG), which allows for separately identifying the two components of the social effect. The components are commonly referred to in the literature as the *contextual* (or exogenous), and *endogenous* effects. Informally, the *endogenous* effect measures the effect of a statistic of the group outcomes (say, the average unemployment rate of a group), and the *contextual* effect is the effect of the group characteristics (say, the race and average age of group members). Manski (1993) was the first to introduce the "reflection problem." Informally, this refers to the inability to separately identify the these two types of effects.[5] In other words, one cannot identify whether some group characteristics have a direct effect on an individual (the contextual effect) or are "reflected" and mistakenly attributed to the effect of the group members' outcomes (the endogenous effect).

My methodological contribution can be used to separately identify the two effects if some people are influenced by more than one reference group. The intuition behind the result is as

[4] One approach taken to overcome this problem and use the standard datasets is the use of some proxy of the relevant group. For instance, Bertrand et al. (2000) look at those who speak the same foreign language in the census, and Bayer et al. (2005) consider those who reside in the same census block to be the reference group.

[5] Manski (1993) actually discusses two types of "reflection problem." I present both in Section 3.3.

follows. Consider two subgroups of people that do not know each other, but do share a common intermediate group of contacts (the intermediate group are those who belong to more than one group). One would not expect the characteristics of one subgroup to directly affect the outcomes of another subgroup to which they are not directly tied. If, in fact, we do find an effect, it is evidence for the existence of an endogenous effect that the intermediaries had propagated. However, the extent to which the endogenous effect is propagated also depends on the contextual effect. I further show how to estimate the two effects by explicitly solving for the two effects in the setting I consider. This allows for a comparison of the relative importance of the two effects.

The magnitude of the two "types" of social effects determine the extent to which a change in one's outcome affects others in the group. This has important policy implications for determining the benefit of virtually any program, be it welfare, job training, or bussing of school children. Since in many cases individuals are potentially affected by multiple circles of influence (such as neighborhood, family, friends from high school, friends from college, etc.), the framework can be applied in other settings.

To give an example of the importance of the decomposition, consider a principal of a school who must decide on how to assign children to classrooms. Assume he or she observes the characteristics of the children. For a given pool of children, an assignment to groups could lead to different results, depending on the magnitude of the two effects. If the principal knew the relative importance of the two effects, he or she could optimally assign the children to classes in order to maximize some objective, such as helping the weaker students, or maximizing the average test score, or any other goal. Moreover, a strong endogenous effect suggests that any program which targets outcomes, for instance, helping one find a job, will have a "spillover" effect, such as increasing the employment likelihood of someone else in the network.

I illustrate an application of my method by considering my sample of WWI veterans. For each of the veterans, the two groups of reference are the veterans who had served with him during WWI, and a group of his closest (in terms of distance) neighbors. The statistically significant results suggest that the endogenous effect is much larger when compared with the contextual effect. For various characteristics, the results suggest that at most 20% of the total social effect on employment is due to the contextual effect.

The rest of the paper is organized as follows. In Section 1.1, I review the relevant literature. I then present the data used in this paper in Section 2, and provide some of the institutional background on the draft and the army's structure during WWI. The empirical strategy is discussed in Section 3. It serves as an introduction to the notation and issues involving the estimation of peer effects, and discusses the advantages to using the military company as a reference group. The results are in Section 4. Section 5 introduces the MRG framework and Section 6 illustrates an application of the method. Section 7 concludes and suggests some possible extensions. The appendices are followed by the figures and tables.

1.1 Related Literature

Job search methods are traditionally categorized in the literature into "formal" and "informal" channels. The "formal" market consists of job posting, placement agencies,[6] etc. The "informal" market refers to jobs found through personal contacts, such as friends and relatives. One of the most commonly used frameworks for analyzing the "formal" labor market is the Mortensen-Pissarides search-equiliabrium framework (Mortensen and Pissarides 1999). In this framework, one's likelihood of employment only depends on others indirectly, through the likelihood of obtaining a match which in turn is a function of the number of vacancies and job seekers ("market tightness"). While I control for characteristics that are likely to affect one's likelihood of finding a job through the "formal" market, this paper focuses on the "informal" channel.

The importance of the "informal" channel as a source of jobs has been documented by various surveys. Contacts have been shown to be of importance across occupations, skill levels, and countries. Ioannides and Loury (2004) provide a comprehensive overview of many of these findings. Bewley (1999, p. 368) lists 24 studies that were published between the years 1932-1990. The percent of jobs or job offers obtained through friends and relatives ranges from 18% to 78%, and is between 30-60% in most of those studies.

There are several possible types of explanations as to why one's likelihood of employment might be affected by one's peers. These include referrals, social norms or "stigma" effects, information transmission, etc. For example, those unemployed might enjoy consuming leisure more if their peers are unemployed. Alternatively, there might be an associated shame in work (or in unemployment) within a peer group. One could derive utility functions in which an agent seeks to confirm to the behavior of the group. See, for example, Akerlof (1997). Stutzer and Lalive (2004) find that the differences across communities in the belief of what the appropriate level of employment benefits is are correlated with the duration of unemployment. In the case of referrals or references, employers might use their current workers as a source of information to reduce the uncertainty regarding the quality of a prospective employee. (See Montgomery (1991) for example).[7] Last, networks can be of value even if all agents are identical and their utility does not depend on that of others. Networks can reduce the search frictions in the labor market via transmission of information.

The various explanations do not necessarily contradict one another, and at times the distinctions are somewhat arbitrary. Nevertheless, this paper is motivated by the role networks play in information transmission, some reasons for which are given in Section 3. This has been the explanation on which some of the recent literature has focused on. Boorman (1975) considers a framework in which agents learn of job openings and either take them, if unemployed, or pass them on to their contacts, if they already have a job. This succinct framework is sufficient for generating the prediction that unemployment level among one's group has an adverse effect on one's own likelihood of employment. This type of mechanism is used by Calvó-Armengol and Jackson (2004)

[6] For example, in Maryland, already in 1902 the operation of a free State employment agency was mandated by law (Chapter 365, Acts of 1902). Source: http://www.mdarchives.state.md.us/msa/mdmanual/20dllr/html/dllrf.html

[7] Greenwald (1986) presents a model that considers the moral hazard that a worker faces when deciding to refer a potential candidate.

to model a system which delivers persistence in unemployment levels among groups. The striking feature of their model is that very small differences in the initial conditions can lead over time to large differences between groups. The informational aspect of networks was used by Topa (2001) to explain the clustering of unemployment within Chicago neighborhoods. Whereas Topa uses a probabilistic approach for the likelihood of a contact (which allows for "spillover" of information across census tracts), in my data I am able to observe actual contacts.

The recent work of Bayer, Ross, and Topa (2005) contributes to a better understanding of the referral aspect of networks. Using micro-level census data for Boston, they find that those who live on the same block are more than 50% more likely to work together, than those living in nearby blocks. Their findings substantiate my use of block-neighbors as the choice of the second reference group (the first being the military unit), as discussed in Section 6. One limitation of my data is that I do not observe the place of employment. On the other hand, Bayer et al. (2005) point out that their estimates are likely to downward bias the importance of networks, since block-neighbors are not the only source of jobs. My data is better suited to examine cases in which agents pass on information about other job openings, not necessarily in their own firm.

One aspect I do not address in this paper is that of job quality (conditional on job type), as proxied by wage, since income and wages were not collected in the 1930 Census. However, various theoretical models predict different effects of networks on wages. For instance, Mortensen and Vishwanath (1994) predict a positive effect whereas Bentolila et al. (2004) predict a negative effect. This is further corroborated by Ioannides and Loury (2004), who report that various studies find different signs for the effect of networks on wages.

Group formation in my data is most closely related to the literature on random assignment to groups. For instance, Sacerdote (2001), Zimmerman (2003), and Duncan et al. (2003) consider random roommate assignments for various colleges. Bayer et al. (2004) consider cell-mate assignment for prisoners, and Kling et al. (2005), among others, have examined the Moving to Opportunity program which assigned low income families to socioeconomically stronger neighborhoods. One common feature of all those settings is that the "treated" population is very homogenous in its nature. In contrast, the members of my sample come from a diverse background.

There is a relatively large literature in economics which examines the military. For instance, Angrist (1990) uses the Vietnam War draft to examine the effect of veteran status on earnings. However, the majority of these studies examine the "treatment effect" of military service (or type of military service). Note that I focus only on those who had served (and who have had very similar military experiences). In exploiting the strength of camaraderie in the military, my work is closest in spirit to that of Costa and Kahn (2003). They examine how group characteristics of units in the Civil War affect such measures as desertion and arrest. De Paula (2005) uses the same data set to model and estimate the decision to desert within the framework of a continous-time-game and finds that the endogenous effect to be of importance. These papers provide further evidence on the importance of ties formed during war. The advantage of examining units formed during WWI is

that they were drawn from a far larger geographic base.[8]

The second part of the paper is related to the literature on the identification of social interactions. Manski (1993) was the first to formally consider many of the issues which are particular to the identification of social interactions. In this paper I focus on the linear-in-means case, as the bulk of the literature has used that specification for estimation. Brock and Durlauf (2001a, 2004) show identification for the case in which the dependent variable is binary, by exploiting the non-linearity of that setting. For the functional forms they consider, the MRG framework can be used by relaxing some of their assumptions (though requiring additional information on multiple group membership).

2 Data

This paper uses a new dataset which was constructed from various sources. It consists of U.S. infantrymen who had served together during WWI in the 313th Infantry Regiment, 79th Division. The core sample of men (*n=1,295*) were all drafted and had fought overseas. I focus on the military company as the individual's reference group and examine *all* those in his unit. There are two main elements which are likely to make these groups a significant reference group. The first is the sense of affiliation, or unit pride. Second, all of the units I examine consist of men who trained together, shipped to Europe, and fought together overseas. Ties forged during battle are likely to be meaningful. The choice of company as reference group is further motivated in Section 3.

In addition to their military service records, the men were linked to two additional data sources, the 1930 U.S. Census of Population, and their pre-war draft registration card. Finally, for each of the men linked to the Census of 1930, information about up to 60 of their nearest neighbors was collected. Tables 1-2 provide some summary statistics for the various samples.

The linked dataset allows one to observe those who had served together in the same military company (companies consisted of 100-200 men), observe their, and their neighbors', post-war outcomes in the 1930 census, while controlling for their pre-war place of residence and occupation. The 1930 Census includes information on labor market outcomes, such as employment, occupation, and industry, housing market information, such as ownership and housing values, and various demographics, such as age, race, parents' place of birth, and immigration information. The military service records provide information on place of residence prior to enlistment, place and date of birth, ranks and promotions, citations and court martials, whether wounded, and the (military) company affiliation within the regiment. The draft registration records were used to obtain information on the men's occupation prior to enlistment. The data collection and linking procedures are further described in Appendix I.

[8] Most of the units during the American Civil War were based on people coming from the same town(s).

2.1 Sample Design

As explained in Appendix II, WWI units differed greatly in the ways in which they were formed. The sample design, that is the choice of units to examine, focused on minimizing the possibility for a selection bias. First, I have chosen to look only at those units formed by the draft. On April 1st 1917, prior to the draft, the Army's size totaled 281,880 men. By November 11, 1918, it had grown almost fifteen-fold to 4,185,220 (Maryland War Records Commission 1933). Most of this increase, 2,810,296 men, came from those drafted.

The main advantage of looking at those drafted, in addition to being the largest portion of the army, is the involuntarily nature of the assignment into groups. This allows for a rare opportunity to examine a case in which networks were formed due to an exogenous shock, President Wilson's decision to enter the war.

The next level of choice was the division(s) on which to focus. Divisions were largely separated across the different components of army (Regular Army, National Guard, and the National Army). Within the National Army (the drafted men), some of the divisions were based on men from a number of states, and others were based on the population at large. For instance, the 79th Division primarily included men from the District of Columbia, Maryland, and Pennsylvania. However, note that these divisions were all formed "from scratch" during 1918. As divisions were being organized, men were constantly being transferred between divisions during the first few months prior to shipping overseas. Each division had, on average, more than twice as many men pass through it as appeared on the final roster when the division shipped to Europe.

Similarly, within the division, some regiments were formed with the intention of having men come from the same state(s). For example, the sample used in this paper, the men of the 313th Infantry, were largely drawn from Maryland. I chose to focus on a regiment that was largely drawn from one state for two main reasons. The first was to circumvent some of the issues regarding the draft mechanism. Since all men were from the same state, they were all selected using similar criteria, and according to the same probability.[9]

Second, in the case in which men are all from the same region, there is a higher likelihood that the bonds formed during the war would be of use post-war. For instance, a farmer who had lived in a village in Maryland, would be more likely to move to Baltimore to take up a job found through his fellow unit member than he would if that job opportunity was, say, in Washington state. However, as shown in the next section, there was enough variance within each group that the men of each unit did not all come from the same place in Maryland.

The sample I have selected belonged to the Infantry Branch. One might be concerned that men were selected into different military occupations based on their ability or skills. It is important to keep in mind that the military during WWI was far less specialized in its occupations, training, or needed skills than it is today or even during WWII. There was little, if any, screening or testing on

[9] Conditional on being a civilian, white, male, citizen, with no major health problems, the actual likelihood of being drafted was determined by a lottery, and hence, was random. However, the probability varied across the states, as different states had different quotas and different pool sizes.

which assignment was based. The bulk of the fighting men were infantrymen.[10] In addition, their training did not vary much from that of, say those in the artillery. The skills acquired during the war, especially those transferable to the civilian labor force, were fairly homogenous across military professions, and quite limited. In my sample, men had trained in the US only for a few months before shipping to France.

2.2 Assignment to Groups and Sample Representativeness

Since I focus on units which were largely drawn from the same geographic region, one might be concerned that assignment within the regiment at the company level might be correlated with the draftees' place of residence. I show that any correlation with place of residence was limited to a portion of the company. Figure 3 presents the distribution across all towns for all those who were from Maryland, for each of the 12 companies in the 313th Infantry regiment. In the case of Baltimore, I used the draft board areas (draft boards were assigned geographically, and in denser areas, to every 30,000 people). Note that in no case does the fraction of men from one town exceed 30%. In two-thirds of the cases, the largest fraction does not exceed 20%.

To illustrate, consider all the men who had lived in the last 5 blocks (2500-3000) of Woodbrook Avenue, Baltimore, Maryland.[11] In total, 25 men from those 5 blocks served during World War I, of whom 14 were drafted. Of the 14 drafted men, only 5 of them ended up in the 313th Infantry Regiment (the others were not even in the same division). Of the 5 who ended up in the 313th infantry, one served in the HQ company, one served in company G, and two served in company I (the fifth never shipped oversees and was transferred to a different unit). Within company I, while it is likely the two knew each other (as they lived two blocks from each other before enlistment), only 8 others in that company were from the same draft board that covered an area of 30,000 people. The rest of the company consisted of 50 men from Baltimore,[12] and another 52 from one of 14 towns in Maryland, and yet another 5 were from Ohio. Those who had come from small towns and villages were even less likely to have prior connections with others in their companies. For instance in the same co. I, there were only 3 men from Hagerstown (Washington County, Md.), the third largest city in Maryland at the time.

Since the nature of the assignment is crucial, I further investigate its properties. Table 3a reports the results of a chi-square test for the null hypothesis that the number of people with a certain characteristic were randomly assigned among the companies. I examine all pre-war variables for which there are on average more than 5 outcomes for each company. These variables include age, place of birth, parents' place of birth, and prewar marital status. The last two variables,

[10] The infantry was by far the largest branch with over 1,000,000 men in 1918; the next largest branch was field artillery with almost 400,000 men. In comparison, there were only 30,000 men in the Cavalry.

[11] I arbitrarily chose Woodbrook Ave. since it was the last street in the alphabet from which men from the 313 Infantry Regiment had come.

[12] Note that in 1917, Baltimore's population was approximately 700,000 and the size of the next largest town in Maryland was about 40,000. Approximately half of Maryland's population lived in Baltimore. (In the 1920 Census, Baltimore City's population stood at 733,826 and Maryland's at 1,449,661.) Source: http://www.census.gov/population/

killed or wounded during war, and died as a result of battle, are included as evidence on the similarity of wartime experience these companies had experienced. For none of the 17 variables is the null rejected at the p>90% level, suggesting that these characteristics are consistent with random assignment. Table 3b reports the results for two variables which have multiple possible values, the occupational income score prior to enlistment, and age. The occupational income score ranges from 3 to 80, and is a measure of how well-paying a job is.[13] A Kruskal-Wallis rank-sum test does not reject the null hypothesis that the distributions are consistent with random assignment for those two measures (p-values of 0.47 and 0.33 respectively).

In Table 4, I examine the representativeness of the sample by comparing the occupational income score of my sample prior to enlistment, to two other samples based on the 1920 Census. The first of the two is for all white males in the same age bracket, 21-30, from Maryland. The second is the same demographic group from the entire U.S. The companies and the 1920 sample population seem very similar. This is not all that surprising considering that the draft included a large part of the US male population in that age bracket.

I conclude this section by noting that while World War I's casualty rate for the European armies (and civilian population) was of great magnitude, the US had very few casualties, as it joined the war very late (see Table 5b). The US military WWI's death toll, in both percent and absolute terms, was smaller than World War II (and certainly the Civil War). Table 5a presents a comparison for some of the major wars the US participated in. WWI was also a relatively short war (less than 2 years for the American troops).

3 Empirical Strategy

3.1 Peer Effects and Labor Market Outcomes

In Section 1.1, I survey some studies which had documented the importance of the "informal" channel, that is jobs found through friends and relatives. The aim of this paper is not to model why peer effects might be influential, various authors have suggested different rationales, some of which were mentioned in Section 1.1, but rather to better understand the channels through which peer effects operate in the labor market.

Assume there are $g = 1..G$ groups, each with n_g members $i = 1, 2..n_g$. In many types of models, the econometric specification is written as:

$$y_{i,g} = h[\alpha + x'_{i,g}\beta + Z'_g\gamma + \rho \cdot m(\overrightarrow{y}_{-i,g}) + \epsilon_{i,g}] \tag{3.1}$$

Where each individual, indexed by i, g has an outcome of interest y, say the binary outcome of being employed or unemployed, a vector of covariates x which affect the likelihood of employment, such as age, occupation, and local labor market conditions, and an error term ϵ_i, a scalar capturing

[13] This measure is based on the median wage of an occupation in 1950. While the measure is not a perfect proxy, the purpose here is to examine the distribution. The results would still hold even if the scores of some occupations had changed over time.

the individual unobservable characteristics and shocks to his or her employment prospects. In addition, each individual's job prospects might depend on the groups characteristics summarized by the vector Z_g, and the outcomes of all other members in the group $\overrightarrow{y}_{-i,g}$. γ is often referred to in the literature as the contextual (or exogenous) effect, and ρ as the endogenous effect. It is possible, and in most instances, quite likely, that Z_g depends on the characteristics of others. For instance, Z_g might just be the average of the group characteristic, $Z_g = \frac{1}{n_g}\sum_{i\in g} x_i$, for example, the average age among group members.

This specification already incorporates the assumption that the various arguments are separable and linearly additive in the function $h[\cdot]$, and that all of the group's endogenous effect is aggregated or summarized through the function $m : \mathbb{R}^{G-1} \to \mathbb{R}^1$. For instance, when considering social norms, one could motivate the form $m = E[y_i|i \in g]$, that is, one's utility depends on the expectation of other's behavior.

Alternatively, in a more mechanical model, where networks just provide information on job availability, if those employed are more likely to have such information, again, one's own probability of employment will depend on the expected outcome among others. Eq. 3.1 in some form or another is used in virtually every empirical study of peer effects. The identification of this model will be discussed in Section 3.3.

In the empirical part of the paper, m_g will be replaced with $\bar{y}_g = \frac{1}{n_g}\sum_{i\in g} y_i$, the average outcome among group member, or the same measure, self excluded, $\bar{y}_{g,-i} = \frac{1}{n_g-1}\sum\limits_{j\in g, j\neq i} y_j$. From an empirical standpoint, there is little difference between the two for the group size I consider. Also, note that if $\rho \neq 0$ then $\bar{y}_{g,-i}$ does contain y_i in it (since $y_2, y_3..y_{i-1}, y_{i+1}..y_{n_g}$ each depend on $y_{i,g}$).

For both measures, in the case of small group sizes, the use of either measure ($\bar{y}_g$ or $\bar{y}_{g,-i}$) introduces problems in the coherency of the model, depending on the functional form used. (See Heckman 1978 for example.) However, the groups I consider in my data are large enough to assume that the sample analog is a measure of the expected value and that the members don't make their choices by calculating or anticipating the outcomes of each and every member, but rather a measure of the group average outcome.

3.2 Reference Groups Formed During War

The military group used as the reference group throughout this paper is the military company in which each veteran served during WWI. There are several advantages which groups formed during military service provide. These include the circumstance and manner in which the groups were formed, scope and size of reference group, and strength of ties.

From a methodological point of view, the major advantage of examining a military setting is the way in which companies were formed. Unlike most other settings,[14] formation of networks in this case was exogenous and involuntarily. Further, the nature of the experience was likely to create

[14] In section 1.1 I presented some exceptions.

strong bonds. All the men examined served oversees and participated in one or more campaigns during the war. The men did not only spend all of their time with each other, but also depended on one another and had to develop the ability to work as a team. At times their lives depended on the actions of their comrades. Unit spirit and pride was also encouraged by the military, as a way of building unit cohesion.

From the various levels of hierarchy, I have chosen the military company.[15] During WWI, the company level was the largest autonomous unit. While it was possible for different companies in a battalion to be assigned to different locations or tasks, the companies themselves were almost never divided and were always assigned as a group to a task. In addition, the company viewed itself as a cohesive unit of reference. For instance, after the war many companies published their history.

In addition to companies being cohesive units, from the point of view of network analysis they have an appealing size property. Much attention has focused on the importance of "weak ties." For instance, in the case of labor markets, Granovetter (1974, 1995) finds that it is weak ties, such as a neighbor, as opposed to strong ties, such as a brother, which are responsible for most of the jobs found. Networks at the company level contain relatively large number of individuals, increasing the probability that while not all veterans become best friends, they would still be of value as a "weak tie," and hence more likely to have an effect significant enough to be picked up. Companies are a small enough group to allow its members to know each other. Yet, they are large enough to allow for a substantial number of potentially useful ties. In Section 4.3, I look at a larger, less finer, group level (the battalion, which includes several military companies), and find that it does not have a statistically significant effect. This is in contrast to the case in which the military company is defined to be the appropriate reference group.

3.3 Identification

In this section I introduce the basic concepts involving the identification of social influences. I discuss the three most commonly issues raised in regards the identification of group/social effects, but in no way is this a complete treatment. The interested reader is referred to Brock and Durlauf (2001b) and Moffitt (2001) for a more thorough discussion of these issues.

The first two types of problems were first formalized by Manski (1993) and are known as the "reflection problem." Consider again Eq. 3.1. For simplicity, and with no loss of generality, assume that all variables are of dimension one. Further, the endogenous effect depends on the expected outcome among group members $m_g^e = E[y_g]$. The basic linear-in-means model, where $h[t] = t$ can be written as:

$$y_{i,g} = \alpha + \beta x_{i,g} + \gamma Z_g + \rho m_g^e + \epsilon_{i,g} \tag{3.2}$$

Next, assume that:

[15] In the infantry, each company is composed of 4 platoons. The full strength size of a company was 100-200 men. Every four companies made up a battalion. There were 12 infantry companies (3 battalions) in each infantry regiment, in addition to other support elements such as the Headquarters and Supply company. A division consisted of many regiments, of which four were infantry regiments. (A full strength division had more than 20,000 men in it.)

Assumption 1 $E[\epsilon_i \,|\, x, Z_g, i \in g] = 0$

Then taking expectation of both sides of Eq. 3.2 one obtains:

$$m_g^e = \alpha + \beta E[x_i \,|\, i \in g] + \gamma Z_g + \rho m_g^e \tag{3.3}$$

Rearranging terms and substituting Eq. 3.3 back into Eq. 3.2 one can derive:

$$y_{i,g} = \frac{\alpha}{1-\rho} + \beta x_{i,g} + \frac{\beta\rho}{1-\rho} E[x_i \,|\, i \in g] + \frac{\gamma}{1-\rho} Z_g + \epsilon_{i,g} \tag{3.4}$$

Seemingly, based on Assumption 1, one could estimate the unknown coefficients by OLS. However, if group attributes depend on the characteristics of its members (for example, say $E[x_i \,|\, i \in g] = Z_g$), then ρ and γ, the endogenous and exogenous effects, cannot be separately identified.[16] (See the remark following Proposition 1 in Manski, 1993). Manski coined the term "the reflection problem" to describe this problem. Note that this result was derived even though it was assumed that error terms are independent of group (and own) characteristics, nor was it assumed that the errors were correlated among group members.

The second type of "reflection" discussed in Manski (1993) is one in which the unobserved errors are correlated across group members and depend on the group attributes. Similar to the above case, one cannot separately identify whether the observed effect of the group outcomes is due to the "endogenous" effect or whether it is just a reflection of the group's unobservables.

The third concern which is common to many group settings is that often group formation is endogenous. If the unobserved characteristics of members influence their choice of groups, and if that choice is based on the observed (or unobserved) characteristics of the group, then the usual selection problems arise. This selection problem is, of course, not unique to group settings, but it maybe be harder to address. I will briefly discuss why it may be harder to use an instrumental variable approach in the case of groups in Section 4.5. Note that while the selection problem is likely to result in the second type of reflection problem discussed above (correlated unobservables), even if group membership is exogenous, correlated unobservables might still exist if the researcher cannot control for all of the group characteristics or if there are measurement errors (see Moffitt, 2001).

4 Results

Recall that the goal is to estimate a model of the form:

$$y_{i,g} = h(\alpha + x_{i,g}^{'}\beta + Z_g^{'}\gamma + \rho \cdot m_g^e + \epsilon_{i,g})$$

where m_g^e is replaced with $\bar{y}$ or $\bar{y}_{-i}$, as described in Section 3.

[16] One could, however, identify the existence of a social effect, namely whether: $\frac{\beta\rho+\gamma}{1-\rho} \neq 0$.

I start by presenting the results for the "naive" case under the assumption that there is no exogenous effect ($\gamma = 0$). I then address the simultaneity problem by using two approaches. First, in Section 4.2, I consider a reduced form specification which uses far less assumptions and show that the group effects are statistically significant, though the magnitude of the results do not necessarily have an economic interpretation. I then instrument the group's average outcome. Those results are in Section 4.5. For robustness purposes, Section 4.3 provides evidence that the military group is, in fact, significant by considering an alternative sample and alternative reference group specifications. Various controls for the place of residence prior to enlistment are presented in Section 4.4. Even when examining only those who had very few others in their company come from the same place, the company's unemployment rate is still found to be statistically significant. In Section 6, I present an application of the MRG framework which allows for both an endogenous and contextual effect.

4.1 The "Naive" Estimator

I first consider the base case in which it is assumed there are no contextual effects, that is $\gamma = 0$. This is the approach taken by many empirical studies, as it circumvents the need to deal with some of the identification issues presented in the previous sections.[17]

Even under the assumption that the unobserved term is uncorrelated with individual characteristics, the coefficient ρ is biased for finite group sizes.[18] However, it is of use to examine this base specification as a point of departure.

After controlling for personal characteristics, as well as occupation and county fixed effects, the group's unemployment rate has a statistically significant effect, and of economical substance. In the case of the veterans sample, an increase of one percentage points in one's (military) company unemployment rate, decreases one's probability of being employed by almost 0.4 percentage points (the average employment rate in the veteran's sample is 93%). The marginal effects reported are calculated at the average rate, and are based on the point estimates.

Table 6 reports the results of one's own likelihood of being employed, in the 1930 Census, as a function of various control variables. The functional form used in these tables is the probit. Similar results (not reported) hold for the logit functional form. In Table 6, I present the results for the baseline specification for the sample of WWI veterans. The last columns include the "naive" specification in which the average unemployment rate among company members and those living on the same block are included without controlling for the simultaneity. (The next sections present various alternatives for addressing the problem).

I now turn to a more detailed description of the results. Columns 1-4 contain only one's own covariates, and Columns 5-7 examine the effect of various measures of unemployment among group members in addition to one's own covariates. In the case of the WWI veterans, as all were in their 30's and 40's in 1930, I've included a dummy variable of being over 40 instead of age, though the results don't change much if age and age squared are used instead. The variable wounded denotes

[17] Many times, there is little justification given as to why one might believe there is no contextual effect.

[18] For example, in the linear-in-means case $\text{cov}(\epsilon_i, \bar{y}) = \frac{1}{n_g(1-\rho)} Var(\epsilon_i)$.

whether the veteran was wounded during the war. Most of the wounds were classified as "slightly wounded," and the effect of having been wounded on employment does not significantly depend on the severity of the wound. All the men in the veterans sample were enlisted men, and I include controls for their rank (the ranks are private, private first class, corporal, sergeant, staff sergeant and supply or mess sergeant).

Column 1 includes one's age, whether head of household (which in the veterans sample is highly correlated with being married, $r = .86$), and controls for rank and being wounded during the war. Being over 40 reduces one's likelihood of employment by 9 percentage points. Household heads are slightly more likely to be employed, though this effect is rarely statistically significant in any of the specifications.

In regards to rank, those who had reached a higher rank were more likely to be employed. However, this effect reaches its peak for the rank of corporal and decreases for sergeant. Further, the effect for those who were Supply or Mess Sergeants is negative (though not statistically significant). In all specifications, the largest, and usually the only statistically significant effect is for corporals. Those who had reached the rank of corporal during the war are 1-5 percentage points (depending on the specification) more likely to be employed in the 1930 Census. This is consistent with promotions not being random, but rather being correlated with some ability, which possibly could be transferred to the civilian labor market.

Since all men in the sample participated in battle, I examine whether being wounded has an important impact on the employment likelihood in 1930. Those wounded are slightly less likely to be employed, though the effect is less than one percentage point. In most specifications I have tried, being wounded does not have a statistically significant effect on employment. This is true even when looking at those severely wounded. Severe wounds do not even seem to affect one's likelihood of being in the labor force (or even of survival until 1930). Note that there are several possible reasons for this finding. First, the percent of those in the sample who were severely wounded is less than 3%. Those slightly wounded might not be affected by the wound. Second, there might be a selection bias involved, and we only observe those who had survived, and therefore recovered, whereas those who didn't survive (or recover) would not be in the sample (or the labor force).

Column 2 includes occupation category (one of twelve) as well as a dummy variable for whether one resided in Baltimore in 1930. The inclusion of occupation category has a lot of explanatory power. Being a Baltimorean is not statistically significant, perhaps since while there were more opportunities in the city, farmers were less likely to be reported as unemployed. Being over 40 is still significant when introducing the occupation controls. Column 3 includes county fixed effects and Column 4 includes a dummy for each of the 100+ occupations (as opposed to categories).

In column 5, I include the rate of those not working (be it unemployed or not in the labor force). This measure is meant to capture one possible explanation, that those not working can provide less information on job openings. The effect is statistically significant at the p>99% level. Column 6 reports a similar specification using the unemployment rate instead of the non-working rate. The results are the same, and the point estimate of the marginal effect is slightly higher. The point

estimates imply that an increase of 10 percentage points in one's (military) company unemployment rate decreases one's probability of being employed by almost 4 percentage points. The last Column (7), includes both the neighborhood and the unit unemployment rates concurrently. Both are found to be statistically significant at the p>99% level, and have the expected sign. The point estimate of the unit's marginal effect is more than twice as large. An increase of one point in the company's (neighborhood's) unemployment rate, decrease one's own likelihood of employment by 0.377 points (0.148 points for the neighborhood effect). I conclude by noting that from a practical point of view, one might be inclined to believe that the inclusion of both effects might alleviate some of the concerns regarding the bias.

Since one might be concerned that the sample of veterans is very specialized, I present a similar specification for a more general sample. Table 7 examines the neighborhood sample (hereafter referred to as the NBH Sample), which is a more heterogenous sample, and I include controls for race, sex, veterans status, etc. The results are similar across the two samples. For the neighborhood sample I also include a specification in which only males are included. This avoids some of the issues regarding women's labor supply. The results remain the same, as in 1930, most women were not part of the formal labor force.

In the case of the NBH sample, the neighborhood block's unemployment rate (columns 6-7) is statistically significant. In column 6, I consider the unemployment rate among both males and females. Column 7 considers the unemployment rate only among men. In both cases, the point estimates of the marginal effect are quite high. One concern is that since the neighborhood block is smaller in size than the company considered in the previous table, one's own outcome determines a higher proportion of the group average $\bar{y}$. To address this concern, I have estimated the same specifications using $\bar{y}_{-i}$, that is the average among all others, self excluded. The point estimates are lower for this specification but are of the same magnitude.

4.2 "Reduced Form" Estimates

The results of the "naive" estimator suggest that networks play an important role in determining one's own likelihood of being unemployed. Before addressing some of the issues associated with the "naive" specification, it is of use to examine the "reduced form" estimates which include only one's own covariates and other's (exogenous) covariates. This specification addresses the two aforementioned concerns, the omission of the contextual effect, and bias due to the simultaneity.

The results for this specification are reported in Table 8. I find that the characteristics of the military unit, such as the percent of unit member over 40, and the neighborhood block characteristics, such as marital rate and the average age of those in the labor force have a statistically significant effect. I interpret the fact that I find a statistically significant effect for some of the coefficients as further evidence for the "existence" of a peer effect in determining unemployment.

The reduced form specification can be written as:

$$y_{i,g} = h(\alpha + x_{i,g}^{'}\beta + \bar{X}_g^{'}\gamma_{1r} + Z_g^{'}\gamma_{2r} + \epsilon_{i,g}) \tag{4.1}$$

where $\bar{X}_g = \frac{1}{n_g} \sum_{i \in g} x_i$. The distinction between the group's average of individual characteristics $\bar{X}_g$, and Z_g, the group's characteristics is somewhat arbitrary, and mainly included for the consistency of the notation in other sections. The coefficients γ_r are indexed with r as they are only a measure of whether a social influence exists. If there is no endogenous effect their magnitude can be interpreted as the contextual effect.[19]

In Table 8, column 1 includes besides one's own characteristics three group averages, the percent of those over 40 years old, the percent married, and the percent of the company members who were wounded during the war. The percent of company members who are over 40 has a statistically significant effect at the p>95% level. The point estimate suggest that a ten percentage points increase in the rate of those over 40 would decrease one's own likelihood of being employed by two percentage points. The company's marital rate has a positive effect on one's own employment prospects, but the standard errors are very large. This is not all that surprising since in most of the specifications I have tried, one's own marital status is not found to be a statistically significant predictor of employment. Similarly, the company's injury rate during the war is not found to have a statistically significant effect. (In Section 4.1 I have discussed more extensively the fact that having been wounded during the war does not seem to have a statistically significant effect.)

Column 2 adds the percent of others in one of five occupational categories. The only one found to be statistically significant is the percent of company members who are farmers, which adversely affects one's own likelihood of employment. Possibly this could be since most were not farmers, and so farmers were a less useful source of job information for the others. Column 3 includes, in addition to the company's occupations, the percent of those in one of three occupational categories for those in the neighborhood block. The only statistically significant results are for the occupation choice of others in one's own neighborhood block. One way to interpret these results are that the neighborhood effects are stronger. On the other hand, selection into neighborhoods is not exogenous and could be influenced or correlated with the type of occupation.

Columns 5-6 repeat the reduced form specification, and examine the likelihood of employment for all of the neighborhood sample members which includes all the neighbors of the veterans. The average age and age-squared of one's neighbors are found to have a statistically significant effect.

In Section 4.5 I will consider an instrument which I include here directly. Column 4 examines the likelihood of employment as a function of one's own characteristics (including occupational categories fixed effects), and the average age and age-squared across all neighborhoods in which the company members reside. The age of all other neighbors of the company members is found to have a statistically significant effect. While it is difficult to attach any meaningful interpretation to the magnitude of the estimates, it does suggest that the company members (as captured by their neighbor's ages) have a statistically significant effect. While one could argue that the average age of members in one's own block is endogenous, it would be hard to argue that one could affect the choice of neighborhood for all other company members.

[19] For example, in the linear-in-means case, if there is no endogenous effect ($\rho = 0$), then it must follow that $\gamma_{1r} = 0$, and γ_{2r} is the contextual effect. (This can be seen by examining Eq. 3.4.)

Due to the exogenous nature of the assignment to groups it is less likely that the individual unobserved error is correlated with the average of other's individual characteristics, such as age. This assumption primarily depends on the nature and the time in which most of the unobserved error term ϵ was determined.[20]

The main disadvantage of the reduced form approach is its relatively weak explanatory power when compared to the naive approach. Often times, the available covariates, as in my case, do not account for the majority of the observed variation. The less explanatory power the covariates have, the less likely they are to be a good proxy for other's outcomes. This could be further exacerbated in the case in which the model is non-linear, as in the probit estimates presented in this section. Even if some linear combination of covariates have a strong explanatory power for each individual, a linear combination of the means of the covariates may have very little explanatory power in explaining the group's average outcome.

4.3 Alternative Specifications of the Reference Group

In this Section, I examine whether my findings of the importance of one's military company are robust to alternative specifications. First, I show that when examining a larger group (the battalion), which subsumes the military company, the results no longer hold. Further, when both the battalion-level and the company-level outcomes are included, only the latter is found to have an effect. Similarly, other companies within the same regiment are not found to affect one's outcomes. Last, I consider a random sample of young white males consisting of the same locational composition, that is males who live on the same blocks, but who have not necessarily served together during WWI. I find that the same measure of group unemployment which is found to be influential in the case of those who served together, is not significant in the case where similar males, are "arbitrarily assigned" to groups.

The first two columns of Table 9 examine the case in which the reference group is defined as one level higher within the army hierarchy, that of the battalion (see Figure 4). Each battalion consists of four companies, and hence this group is four times larger. As can be seen in Column 1, the effect of the battalion's nonworking rate is not statistically significant. The measure is very noisy, as it contains the military company members which were found to be statistically significant in the previous sections. Once the nonworking rate of the company members is included in Column 2, the point estimate of the battalion measure is very close to zero.

Columns 3 and 4 consider the effect of another company from the same regiment, though from a different battalion.[21] I find no statistically significant effect for the other company, while one's own

[20] At one extreme, the error might be solely due to events which occurred during 1918/9, in which case it is possible that those assigned to companies in which the average age was higher gained some higher/lower unobserved ability. On the other hand, if most of the shock is due to events and circumstances occurring in 1930 (such as being laid off), or were built over a long period (say during the person's entire life since the 1890's), then the assumption is likely to hold.

[21] For each company, the "corresponding" company was selected by looking at a company which was alphabetically at the same position in the next battalion. For example, in the case of Co. A (1st Battalion), the corresponding company is the first company in the 2nd Battalion (Co. E).

company is found to have a large effect. In Column 4, the point estimates suggest that an increase of one-percentage-point in one's own company's nonworking rate, decrease one's own likelihood of employment by half-of-a-percentage point.

In Table 10, I report the results for various specifications in which the unemployment rate of a pseudo company is included. The purpose of this exercise is to show that the company unemployment rate is not just a proxy for a group of people who happen to have some distribution of locations in the 1930 census. The pseudo company was constructed as follows. For each of the veterans, I randomly picked one white male in the same age bracket who lived on the same street as the veteran in the 1930 Census. We would expect the unemployment rate among this fabricated company to have a very small direct effect, if any.[22] This expectation is confirmed by the results of Table 10. The first column includes the base specification without the effect of the pseudo company. The other 3 columns (2-4) include the unemployment rate among the pseudo company members. In all three cases, the measure is not statistically significant. The standard errors are quite large, since this measure introduces a lot of "noise" into the estimation as they are a proxy for local labor market conditions, but based only on a single observation for each neighborhood.

4.4 Controlling for Prewar Place of Residence

In Section 2.2 I had discussed the correlation between one's pre-war place of residence and the assignment to group. Recall that in no case did soldiers of one town (or the in the case of the large cities, the area equivalent to a voting precinct) constitute more than 30% of a company, and in most instances, less than 20%. Moreover, many members of each company were one of only a handful from the same town, or even state if they were not from Maryland.

In this section, I address the concern that the nature of assignment to groups might lead to some unobserved correlations among company members due to the fact that some of them originated from the same area as some of the other company members. The results of this exercise are summarized in Table 11 and provide further evidence that the peer effect should not be attributed to correlations due to pre-war place of residence.

The first column includes a fixed effect for each town (or draft board areas, which were 30,000 people large, for the big cities). The effect of the company's unemployment rate is statistically significant at the p>99% level. The point estimate is very large, but also has a wide range since it is not estimated very accurately. This is due to the sample size, as many towns were very small. The upper end of the 95% confidence interval of the marginal effect is -0.27, which is a little less than the point estimates found in other sections.

In column 2, I restrict the sample to those who had no more than 8 other men in their company originate from the same town (based on their home address prior to enlistment). Column 3 is the same for those who had no more than 3 other men in their company originate from the same town.

[22] Of course, the members of the pseudo company each possibly affect the one veteran on their street, and are collectively a proxy for the local labor market conditions, though a very "noisy" one, since they are based only on one observation.

In both cases the unemployment rate of all others in the company has a statistically significant effect, even though almost all of the company members were from a different town than those examined in these columns. Columns 4 further restricts the sample to those from really small towns, that is those who had no more than 8 other men serve in the entire regiment. Column 5 is the same for the case of 3 others. Once again, the company's unemployment rate is found to be statistically significant in the case of column 4. In column 5 the effect has the expected sign, but the standard errors are large due to the size of the sample.

The results in columns 2-5 are inherently based on those from small towns. Column 6 incorporates those from the large cities by looking at a slightly different sample. For each town I had calculated the number of men in the regiment from that town. I then focus only on those men in companies in which less than half of the men from that town ended up in a particular company. For instance, consider the area designated draft board 15 in Baltimore. In total, 20 men from that area had served in the regiment. But in company C only 3, that is less than half, were from that area. On the other hand, there were 13 men in company I from that area, and they were not included in this regression (however, they were used for computing the group's unemployment rate). Even though the sample size is quite small, the effect of the company's unemployment rate is statistically significant and is found to adversely affect a veteran's likelihood of being employed.

4.5 Instrumental Variables Estimates

As discussed in the previous sections, even under the assumption of no contextual effect, the estimate of the endogenous variable is likely to be biased due to the simultaneity problem. In the empirical social influence literature there are two approaches to solving this problem. The first is the lag spatial model approach (e.g. Anselin (2001)). However, as sample size and the size of the group increases, estimation becomes very unreliable in my experience, since one needs to estimate a system of equations with as many equations as the size of the group.

A second, widely used, approach is to instrument the group's average outcome. In this section I present the results for the IV estimates and discuss some of the problems which are unique to IV estimation in the presence of social influences in addition to the usual concerns regarding the choice and validity of the instrument.

In order for an instrument to be valid, it needs to be correlated with the instrumented variable, in this case, the percent of those not working in each company, *and* it must be independent of the individual's error term. Taking advantage of the rich dataset, I use an exogenous characteristic of ALL of the neighborhoods in which the veterans of a company reside in.

In Table 12, I present an example using as an instrument for the unit's non-working rate, the average of the average labor force age across all blocks in which the company members reside. $(\frac{1}{unit\ size}\sum_{b\in blocks}(\frac{1}{block\ size}\sum_{i\in block} age_{i,b}))$. Similarly, I use the average of the average marital rate (not reported). The statistically significant results suggest that the magnitude of the effect is approximately the same as that of the "naive" estimator. The marginal point estimate for the group's effect is 0.35. An increase of 1 percentage points in one's (military) company non-working

rate decreases one's probability of being employed by a little over a third of a percentage point.

Table 12 reports the results for the case for an IV estimation. The first two columns examine the case in which the dependent variable, whether employed or not, is estimated using the probit functional form and the endogenous variable, the non-working rate among company members, is instrumented using the aforementioned instrument, the average of the average labor force age across all blocks in which the company members reside.

The functional form for the "first stage" is a linear regression.[23] Column 1 estimates the model using maximum-likelihood estimate. Column 2 is the same exact model, using the two-stage approach suggested by Newey (1987). The advantage of the second estimation method is that the likelihood function is less computationally intensive and more likely to converge. However, as can be seen, the results are very similar for the two methods, probably since there is only one endogenous variable. The coefficients (and the marginal effects) obtained using the second method (two-step) estimation are scaled and do not have a meaningful interpretation (though the ratios of two marginal effects would). I focus on the results obtained in Column 1.

The marginal effect of the company's non-working rate, is similar to that found in Section 4.1. The point estimates imply that an increase of 10 percentage points in one's (military) company unemployment rate, decreases one's probability of being employed by 3.5 percentage points. The point estimate suggest that for a veteran, the effect of being over 40 is twice as large as belonging to a company in which the non-working rate is 10 percentage points higher.

Interestingly, the results of the Wald test for exogeneity, which tests whether the first's stage residual is correlated with that of the second stage residual are rejected. The p-value for the test is 0.79, suggesting that the null hypothesis that the instrumented variable, the company's non-working rate, is indeed endogenous, can be rejected.[24] This in turn implies that the results reported in Section 4.1, using the "naive" estimator, are a good approximation. Recall, that if the error terms of each veteran are uncorrelated with any of the group characteristics, and if groups are large enough, then one should not expect the company's non-working rate to be "endogenous".

The 2-stage model, in which the second stage is a probit specification, assumes a very strong condition, namely that the distribution of the error term is homogenous across agents. Unlike the case of the linear model, if this assumption is, in fact, violated, the estimates are not only inefficient, but inconsistent. However, the test for exogeneity discussed above is consistent even when allowing for an heterogenous error term

In addition to the aforementioned need for strong assumptions, in the case of IV estimates when the endogenous variable is the group average outcome, a 2-stage model in which the second stage is probit, will, in general, lead to a logically inconsistent model (for instance, this is a point mentioned by Krauth, 2004). To address these concerns, in Column 3 I present the results for

[23] The results of the first stage regression (not reported) suggest that instrument used is a fairly good predictor of the endogenous variable. The R-squared of the first stage is .20, and the t statistic for the instrument is 9.72. See below for a brief discussion of whether the instrument is a valid one.

[24] Rivers and Vuong (1988) found the Wald test for exogeneity for their proposed 2-step CMLE, which is similar to the Newey(1987) used in column 2, to perform well in the finite samples they had considered.

a two-stage-least-squares estimate. The point estimates are considerably higher, though the 95% confidence interval does contain the point estimates found in Column 1.

In regards to the validity of the instrument, while it is possible that an individual chooses to live at a block based on the average age of its members, the instruments I've used are based on the average across all blocks in which the members of each military company reside. These instruments are based on the characteristics of hundreds of others, and are likely to be uncorrelated with one's individual unobserved characteristics.

The more crucial assumption is that the average age of the neighborhood doesn't have a direct (contextual) effect, but only through the endogenous effect, the group's average unemployment rate. This assumption cannot be tested. In the next section, I present the MRG framework which allows for both endogenous and exogenous effects.

5 Identification using Multiple Reference Groups

I now introduce a framework in which the endogenous and contextual effects can be separately identified, even if group attributes are perfectly correlated with the characteristics of the group members. I prove identification for the linear-in-means case. Also, I show that even if the errors in one of the groups are correlated with the group's characteristics, identification still holds.

The main requirement for identification is that (some) individuals belong to more than one reference group. It is not required that all individuals belong to more than one group, nor that the econometrician observes all group memberships for all individuals.

5.1 Linear-In-Means Case

To focus on one example, I will examine the structure in Figure 1. There are two groups, Group A and Group B, which (possibly) intersect. I further label the partition that this structure creates. The intersection of the two groups, Subgroup 2, contains all the members which belong to both reference groups A and B. The two other subgroups, Subgroup 1 and 3, consist of members which belong only to Group A or Group B, respectively. Note that it is possible that those in Subgroups 1 and 3 belong to additional groups which are unobserved by the econometrician. It is important to note that, in general, identification does not depend on observing those additional group memberships.[25]

To illustrate the structure using the empirical application, Group A consists of all members who had served in a certain military unit, and Group B consists of all those residing in a certain neighborhood block.

Note that the above structure is for expositional purposes only, and the focus of this paper is not to characterize the set of all structures which allow to separately identify the contextual and

[25] Note that according to the assumed structure the unobserved group membership of those in Subgroup 1 cannot be those in Subgroup 3, since by definition, those in subgroup 2 are those members who belong both to subgroups 1 and 3.

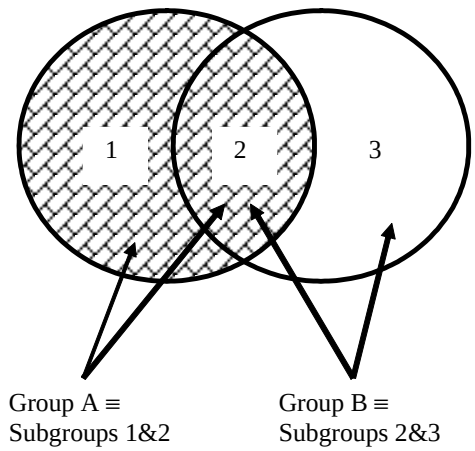

Figure 1: Subdivision notation

endogenous effects. However, there are two necessary conditions which the structure must meet. The first is the existence of a non-empty intersection, that is Subgroup 2 cannot be empty.[26] The second needed condition is that there exists some form of exclusion, that is that one group is not a subset of the other (or in order words, both Subgroups 1 and 3 are non-empty).[27] As remarked above, one should not literally think of those members in Subgroup 3 as belonging to only one group, but rather that the other group they belong to is not Subgroup 1. The fact that we do not observe the other memberships of those in Subgroups 1 and 3, does not impede identification (this will be made clear in the following sections).

Allowing the contextual effect to vary across group types,[28] the linear-in-means model for this structure can be written as:

$$\begin{aligned} y_{i,g=2} &= \alpha + \beta x_{i,g=2} + \gamma_A Z_{groupA(1\&2)} + \gamma_B Z_{groupB(2\&3)} + \rho \cdot m_{groups1\&2\&3} + \epsilon_{i,g=2} \\ y_{i,g=1} &= \alpha + \beta x_{i,g=1} + \gamma_0 Z_{groupA(1\&2)} + \rho \cdot m_{groups1\&2} + \epsilon_{i,g=1} \\ y_{i,g=3} &= \alpha + \beta x_{i,g=3} + \gamma_0 Z_{groupB(2\&3)} + \rho \cdot m_{groups2\&3} + \epsilon_{i,g=3} \end{aligned} \tag{5.1}$$

In the above, α and β are the individual effects, γ_0 is the contextual effect for those who belong to only one group,[29] γ_A and γ_B are the contextual effects for those who belong to two groups, and

[26] If Subgroup 2 were empty for all cases observed by the econometrician, then this is equivalent to the one-group case discussed in Section 3.3 that cannot be separately identified.

[27] If Subgroup 1 or 3 are empty this means that those individuals in subgroup 2 belong to two groups, one of which is entirely contained in the other. If the effects of all groups to which a member belongs are assumed to be the same then this again reduces to the one-group case. If one allows for the effects to be different for the two groups a member belongs to, it is straightforward to show that separately identifying the two effects is not possible.

[28] This assumption embeds the special case in which the contextual effect is assumed to be the same for all groups.

[29] Allowing for a different contextual effect for those who only belong to one group (or for those for which information on only one group is available to the econometrician), allows for a more general case. As remarked above, identification

ρ is the endogenous effect which is affected by the average outcome of all those in the groups the individual belongs to.

As can be seen from Eq. 5.1, each type of individual has a different reference group, denoted by the index of m and Z. From a structural standpoint, the last two equations (for $y_{i,g=1}$ and $y_{i,g=3}$) are equivalent. However, both are included here, since it is important to keep in mind that the covariates of Group 3 enter Group 1 due to the simultaneous nature of the structure.

Next, for notational convenience and with no loss of generality, assume that the three subgroups 1-3 are of the same size and define: $m_t = E[y|Subgroup\ t]$, the expected value of the outcome y for the subgroup t, for the three groups. For example, $m_1 = E[y_{i,g=1}]$.

Using the above notation, rewrite 5.1 as:

$$y_{i,g=2} = \alpha + \beta x_{i,g=2} + \gamma_A Z_{g=1\&2} + \gamma_B Z_{g=2\&3} + \frac{\rho}{3}[m_1 + m_2 + m_3] + \epsilon_{i,g=2} \tag{5.2a}$$

$$y_{i,g=1} = \alpha + \beta x_{i,g=1} + \gamma_0 Z_{g=1\&2} + \frac{\rho}{2}[m_1 + m_2] + \epsilon_{i,g=1} \tag{5.2b}$$

$$y_{i,g=3} = \alpha + \beta x_{i,g=3} + \gamma_0 Z_{g=2\&3} + \frac{\rho}{2}[m_2 + m_3] + \epsilon_{i,g=3} \tag{5.2c}$$

Assuming, as in Section 3.3 that $E[\epsilon_i|x, Z] = 0$, one could take expectations in both sides of (5.2a) to obtain:

$$m_2 = \alpha + \beta \bar{X}_2 + \gamma_A Z_{g=1\&2} + \gamma_B Z_{g=2\&3} + \frac{\rho}{3}[m_1 + m_2 + m_3] \tag{5.3}$$

where $\bar{X}_2 = E[x_{i,g=2}]$, and in the empirical setting $\bar{X}_2 = \frac{1}{n_{g=2}} \sum_{i \in g=2} x_i$. Similarly, one could obtain the same for m_1 and m_3. From Eq. 5.3 one can better see the entwined simultaneity. Assume the contextual effect is perfectly correlated with the average group characteristics $\overline{X}_g$. Recall from Section 3.3 that in the case of a single reference group, one cannot separately identify the endogenous and contextual effects. In contrast, in the above case, the system is fully identified.

Proposition 1 *In the above model (Eq. 5.1), under the assumptions:*
(i) $E[\epsilon_t|x_t, \overline{X}, Z] = 0$
(ii) $(1, \overline{X}_1, \overline{X}_2, \overline{X}_3)$ *are linearly independent for some groups.*
In the case of perfectly correlated contextual effects: $Z_g = E[x_t \,|\, t \in g] \quad \forall g, t,$ *the parameters* $\alpha, \beta, \gamma_0, \gamma_A, \gamma_B,$ *and* ρ *are globally identified.*

Proof. Consider two sets of parameters $(\alpha, \beta, \gamma_0, \gamma_A, \gamma_B, \rho)$ and $(\tilde{\alpha}, \tilde{\beta}, \tilde{\gamma}_0, \tilde{\gamma}_A, \tilde{\gamma}_B, \tilde{\rho})$, and the system of equations implied by the observational equivalence. Taking expectation w.r.t. x_t (using

does hold if all individuals belong to multiple groups. (In which case $\gamma_0 = \gamma_A$ for those in Group A, and $\gamma_0 = \gamma_B$ for those in Group B.)

assumption (i)) and since $Z_g = E[x_t | \, t \in g] \;\; \forall g$:

$$
\begin{aligned}
0 =& (\alpha - \tilde{\alpha}) + (\beta - \tilde{\beta})\bar{X}_1 + \frac{(\gamma_0 - \tilde{\gamma}_0)}{2}[\bar{X}_1 + \bar{X}_2] + \frac{\rho - \tilde{\rho}}{2}[m_1 + m_2] \\
0 =& (\alpha - \tilde{\alpha}) + (\beta - \tilde{\beta})\bar{X}_2 + \frac{(\gamma_A - \tilde{\gamma}_A)}{2}[\bar{X}_1 + \bar{X}_2] + \frac{(\gamma_B - \tilde{\gamma}_B)}{2}[\bar{X}_2 + \bar{X}_3] + \frac{\rho - \tilde{\rho}}{3}[m_1 + m_2 + m_3] \\
0 =& (\alpha - \tilde{\alpha}) + (\beta - \tilde{\beta})\bar{X}_3 + \frac{(\gamma_0 - \tilde{\gamma}_0)}{2}[\bar{X}_2 + \bar{X}_3] + \frac{\rho - \tilde{\rho}}{2}[m_2 + m_3]
\end{aligned}
$$

First, note that if $\rho = 0$, we are done. Assuming $\rho \neq 0$, from the above system of equations it follows that if $\rho = \tilde{\rho}$, then $\alpha = \tilde{\alpha}, \beta = \tilde{\beta}, \gamma_0 = \tilde{\gamma}_0, \gamma_A = \tilde{\gamma}_A, \gamma_B = \tilde{\gamma}_B$.(by assumption (ii)). Hence, it remains to show that ρ is identified. Taking expectations of (5.1) and solving the system of equations, one can solve for the linear projection of (m_1, m_2, m_3) $(1, \bar{X}_1, \bar{X}_2, \bar{X}_3)$:

$$
\begin{aligned}
m_1 =& \theta_0 + \theta_1\bar{X}_1 + \theta_2\bar{X}_2 + \theta_3\bar{X}_3 \\
m_2 =& \theta_0 + \theta_4\bar{X}_1 + \theta_5\bar{X}_2 + \theta_6\bar{X}_3 \\
m_3 =& \theta_0 + \theta_3\bar{X}_1 + \theta_2\bar{X}_2 + \theta_1\bar{X}_3
\end{aligned}
\tag{5.4}
$$

The parameters $(\theta_0, \theta_1, \theta_2, \theta_3, \theta_4, \theta_5, \theta_6)$ are all functions of the original parameters of interest $(\alpha, \beta, \gamma_0, \gamma_A, \gamma_B, \rho)$ are identified by assumption (ii), that is $\theta_t = \tilde{\theta}_t, \forall t = 0..6$.
While the expressions for each θ_t are quite complex (see Appendix 3 for more details), consider the ratio:

$$\theta_6/\theta_3 = 1 - \frac{2}{\rho}.$$

(recall $\rho \neq 0$). Since $\theta_6/\theta_3 = \tilde{\theta}_6/\tilde{\theta}_3$ it follows that $\rho = \tilde{\rho}$. ■

Remark 1 (Intuition for the result of Proposition 1) *The intuition for the above result is as follows. Consider those in Subgroup 3. Even though they are not directly linked to those in Subgroup 1, both their characteristics and their outcomes (contextual and endogenous effects) affect those in Subgroup 1. However, these effects are propagated to those in Subgroup 1 via an intermediate, those in Subgroup 2 (since those in Subgroups 1 & 3 are not directly linked). In turn, this implies that any effect of those in Subgroup 3 on those in Subgroup 1 must be due to the* ***endogenous effect.*** *This point is made explicit by examining the proof, in which the effect of X_3 is different for those in Subgroups 1 and 2 (as captured by the coefficients θ_3 and θ_6). It is the ratio of the two (θ_6/θ_3) which ultimately leads to the identification of the endogenous effect ρ. Note that once the endogenous effect is identified, then the contextual effect is identified, since the sum of the effects is identified even in the single group case.*

5.2 Correlated Unobservables

Correlated unobservables are most likely the biggest concern faced by any empirical study of social networks. The correlation could arise when group membership is endogenous, though as discussed in Section 3.3 it could arise for other reasons. For instance, in the case of neighborhoods, people with

higher ability might choose their neighborhood based on the education level and racial composition of their neighbors. Even if the error term is uncorrelated with the group characteristics Z_g, if people choose based on the individual characteristics of others then the results will be, in general, biased.

In the single-group case this can be seen when examining the reduced form equation. Consider a case in which it is known a priori that there was no contextual effect, that is $\gamma = 0$. If the individual unobservable is correlated with the group average characteristics, X_g (say $E[\epsilon_i \mid i \in g] = sX_g$) then looking at the reduced form:

$$y_{i,g} = \frac{\alpha}{1-\rho} + \beta x_{i,g} + \frac{\beta\rho}{1-\rho}\bar{X}_g + \epsilon_{i,g}$$

it is straightforward to see one cannot hope to identify ρ without any further information (such as a valid instrument).

In the case of MRG, if the errors of one of the group types were uncorrelated, then the model is identified even when the errors of the other group type are correlated.
Consider again the basic MRG linear-in-means model:

$$y_{i,g=2} = \alpha + \beta x_{i,g} + \gamma_A Z_{g=1\&2} + \gamma_B Z_{g=2\&3} + \frac{\rho}{3}[m_1 + m_2 + m_3] + \epsilon_{i,g=2} \tag{5.5a}$$

$$y_{i,g=1} = \alpha + \beta x_{i,g} + \gamma_0 Z_{g=1\&2} + \frac{\rho}{2}[m_1 + m_2] + \epsilon_{i,g=1} \tag{5.5b}$$

$$y_{i,g=3} = \alpha + \beta x_{i,g} + \gamma_0 Z_{g=2\&3} + \frac{\rho}{2}[m_2 + m_3] + \epsilon_{i,g=3} \tag{5.5c}$$

Under the assumption that:
$E[\epsilon_t \mid t \in g,\ g$ is a type A group$]= sX_g$ and $E[\epsilon_t \mid t \in g,\ g$ is a type B group$]=0$ the model is identified.

Proposition 2 *In the above model, under the assumptions:*
(i) $E[\epsilon_{i,g}|x_i, X, Z, g = 1] = E[\epsilon_{i,g}|x_i, X, Z, g = 2] = s[\bar{X}_1 + \bar{X}_2]$, $E[\epsilon_i|x_k, X, Z, g = 3] = 0$ *(unobserved correlation in one of the groups)*
(ii) $(1, \bar{X}_1, \bar{X}_2, \bar{X}_3)$ *are linearly independent for some groups.*
Then in the case of perfectly correlated contextual effects: $Z_g = E[x_t \mid t \in g]$
the parameters $\alpha, \beta, \gamma_0, \gamma_A, \gamma_B, \rho,$*and* s *are globally identified.*

Proof. The proof is very similar to that of Proposition 1.
Consider the projection of (m_1, m_2, m_3)on $(1, \bar{X}_1, \bar{X}_2, \bar{X}_3)$:
$m_1 = \theta_0 + \theta_1\bar{X}_1 + \theta_2\bar{X}_2 + \theta_3\bar{X}_3$
$m_2 = \theta_0 + \theta_4\bar{X}_1 + \theta_5\bar{X}_2 + \theta_6\bar{X}_3$
$m_3 = \theta_0 + \theta_3\bar{X}_1 + \theta_2\bar{X}_2 + \theta_1\bar{X}_3$
Here too, the parameters $(\theta_0, \theta_1, \theta_2, \theta_3, \theta_4, \theta_5, \theta_6)$ are all functions of the original parameters of interest $\alpha, \beta, \gamma_0, \gamma_A, \gamma_B, \rho, s$ and s are identified, that is $(\theta_t = \bar{\theta}_t, \forall t = 0..6)$. The added complication is that some of them include an extra term (s) because of the correlation. However, since the individual error terms are uncorrelated with the group average of one of the Subgroups $(\bar{X}_3)$,

the coefficients θ_3, and θ_6 are in turn, the same as in the uncorrelated case. Hence, as in the uncorrelated case $\theta_6/\theta_3 = 1 - \frac{2}{\rho}$and so $\rho = \overline{\rho}$. The other parts of the proof are the same as the proof of Proposition 1.[30] ■

5.3 Remarks and Extensions

The MRG framework is identified regardless of the group sizes (recall from Section 5.1 that there must be some overlap between the groups, and that one group cannot be a subset of the other). However, estimation does depend on the size of the groups, and more importantly, on the relative size of the various subgroups. For instance, if the intersection of two groups consists of only one member (Subgroup 2 is of size 1), then the effect of Subgroup 3 (Subgroup 1) propagated through Subgroup 3 (Subgroup 1) is likely to be small, and therefore hard to detect. In future work I hope to formally characterize how the power depends on the size of the groups. In Section 6, I present a way around the problem that in the available dataset the size of the intersection groups (i.e., those who had served in the same unit and live in the same block) is relatively small.

In regards to functional form, it is important to note that the underlying source of identification is not the functional form, such as the linear-in-means model considered in the previous section, but rather the group structure (i.e. the availability of multiple reference groups for at least some).

In the case for which the outcome is binary, Brock and Durlauf (2001, 2004) show identification for various settings, taking advantage of the non-linearity induced by the functional form. I have considered identification using a different set of assumptions by exploiting the MRG structure. For instance, I have shown identification for the case in which the functional form is logit, corresponding to the setup considered in Brock and Durlauf (2001a). It remains a topic for future research to examine what classes of functions are identified when some members belong to multiple reference groups.

6 An Application of the MRG Framework

I first modify the framework presented in Section 5.1 to address the fact that in the dataset used in this paper, the size of the intersection Subgroup (those who had served in the same unit *and* live on the same neighborhood block) is relatively small when compared with the sizes of the military units and neighborhoods. In addition, to illustrate that identification does not come from assuming that the endogenous effect is the same for the different types of reference groups, I allow for both the contextual and the endogenous effects to be different for the two types of reference groups (say the army unit, and the neighborhoods). Last, I exploit the fact that the likelihood of being a WWI

[30] Once ρ is identified ($\rho = \tilde{\rho}$) the reduced form of Subgroups 1 and 2 has an additional term $(s - \tilde{s})$ which in the single-group case would prevent the effects from being identified $(\alpha - \alpha) + (\beta - \tilde{\beta})\bar{X}_1 + \frac{(\gamma_0 - \tilde{\gamma}_0) + (s - \tilde{s})}{2}[\bar{X}_1 + \bar{X}_2] = 0$ and $(\alpha - \tilde{\alpha}) + (\beta - \tilde{\beta})\bar{X}_2 + \frac{(\gamma_A - \tilde{\gamma}_A) + (s - \tilde{s})}{2}[\bar{X}_1 + \bar{X}_2] + \frac{(\gamma_B - \tilde{\gamma}_B)}{2}[\bar{X}_2 + \bar{X}_3] = 0$. However, this term is identified by looking at the reduced form of Subgroup 3, which doesn't contain the correlation term:
$(\alpha - \tilde{\alpha}) + (\beta - \tilde{\beta})\bar{X}_3 + \frac{(\gamma_0 - \tilde{\gamma}_0)}{2}[\bar{X}_2 + \bar{X}_3] = 0$

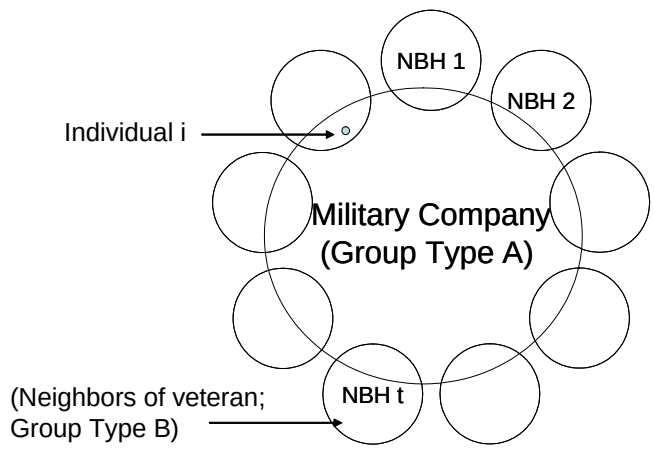

Figure 2: Neighborhood blocks of company veterans

veteran in 1930 is small enough to address any concern of a bias due to unobserved links among other veterans.

6.1 Setup

In this section, I show how to derive the expressions for the endogenous and contextual effects for the case in which the structure of the networks correspond to that of the data I consider. For each of the two types of groups, I allow for both a different contextual and endogenous effects. I also derive the result in case the two types of groups are not of equal size.

In the linear-in-means case, consider a version of Eq. 5.1

$$y_i = \alpha + \beta x_i + \gamma_A \cdot \bar{X}_A + \gamma_B \cdot \bar{X}_B + \rho_A \cdot m_A + \rho_B \cdot m_B + \epsilon_i \tag{6.6}$$

where I've already incorporated the case in which the group characteristics are perfectly correlated with the average individual characteristics ($Z_g = \bar{X}_g$ for $g = A, B$). Using the empirical example, group A are those in the military unit, and group B are those in one's neighborhood block.

Next, I define the following object:

$$\overline{\overline{X}}_B^A = \frac{1}{\text{Size of Group } A} \sum_{s \in A} \bar{X}_{B,s}$$

That is $\overline{\overline{X}}_B^A$ is Group's A average of the average neighborhood characteristic of all the neighborhoods in which the members of Group A reside. In the empirical application, for each unit (Group A) this amounts to the (unweighted) average of all the neighborhoods (Group B) of the unit members.

Consider the following reduced form:

$$y_{i,g} = \alpha + \beta x_i + \delta_1 \bar{X}_A + \delta_2 \bar{X}_{B,t=i} + \delta_3 \overline{\overline{X}}_B^A + \epsilon_i \quad (i = 1..n_{g=A}) \tag{6.7}$$

where δ_2 is the coefficient in the reduced form of the effect of the average neighborhood characteristic and δ_3 is the effect of the average of the average neighborhood for that same characteristic.

Before turning to the result, it is useful to examine the above reduced form. As discussed in further detail in the next section, $\delta_3 \neq 0$ suggests that there exists an endogenous effect. For example, say $\overline{\overline{X}}_B^A$ corresponds to the average across the military company of the average age of neighborhood residents. The fact that the characteristics of such a large group has an effect on company member i to which they are not directly tied suggests that they are, in fact, influencing the other company members, which in turn affect member i. Since the above equation includes a control for the characteristics of all those who are directly tied to member i ($\bar{X}_A$ and $\bar{X}_{B,t=i}$) then it must be that any effect "detected" by δ_3 is due to the endogenous effect. This is shown formally in the following result, where using the two variables δ_2 and δ_3 one can identify ρ_A.

Result (i) *In the above model (Eq. 6.6), and assuming* $E[\epsilon_i | x_i, \bar{X}_A, \bar{X}_{B,t=i}, \overline{\overline{X}}_B^A] = 0$, *the endogenous effect of a type A group is:*

$$\rho_A = \frac{1}{1 + \frac{\delta_2}{\delta_3}}$$

. *(ii) Further, if it is assumed that the endogenous effects are the same for both groups* ($\rho_A = \rho_B$) *then:*

$$\rho = \frac{1}{(\frac{\delta_2}{\delta_3} + 1)(1 - \psi)}$$

where $\psi = \frac{\text{Size of Group B}}{\text{Size of Group A+Size of Group B}}$, *that is, allowing the neighborhoods and army units to be of different size.*

The result is derived similarly to the proof of Proposition 1, by solving the system of equations and examining the coefficients of the reduced form in Eq. 6.7.

Similarly to Section 5.1, the intuition behind the result is as follows. The effect of all other's neighborhoods on one's own outcomes can only be due to the endogenous effect being propagated through a person's group (military unit) members.

6.2 Estimation of the Endogenous Effect

In this section, I start by presenting the results of the reduced form specification corresponding to Equation 6.7. I find that for some of the characteristics, the average of the average neighborhood-level has a statistically significant effect on one's likelihood of employment (corresponding to $\delta_3 \neq 0$). Recall that these variables are constructed as an average of the characteristics of hundreds of others, and are likely to be uncorrelated with one's individual unobserved characteristics.

The results for a linear probability specification of one's likelihood of employment are reported in Table 13. The independent variables are occupation and age for various group levels (own, neighborhood, military unit, and average of neighborhoods across military unit). The variables corresponding to $(\overline{\overline{X}}_B^A)$ (the average across the unit of the average neighborhood level) are those labeled *v., vi., xiii, and xiv* in Table 13. Except for *xiv*, the coefficients are statistically significant at the p>95% level. However, one should be cautious of any interpretation of these results beyond the fact that they suggest the existence of an endogenous effect. For example, the expression for δ_3, the reduced form coefficient, is given by:

$$\delta_3 = \frac{\rho_A(\gamma_B - \rho_B\gamma_B + \rho_B\gamma_0 + \rho_B\beta)}{1 - \rho_A - \rho_B + \rho_B\rho_A}$$

Next, I solve for the coefficient of interest ρ_A, the endogenous effect of one's military company. To do so, I use the reduced form estimated in Table 14. This is the same specification as Table 13, corresponding to Equation 6.7, with one difference. In this regression, I only include those who live on a block in which no other WWI veteran resides. This is the case for a little over a quarter of the sample. However, note that the company average $(\bar{X}_A)$ and the average of neighborhoods across the company $(\overline{\overline{X}}_B^A)$ are computed using all members .

The reason for focusing on this subsample is to address any concern for potential bias due to some unobserved affiliation of neighbors who are themselves WWI veterans (and served in units which are not in my sample). To illustrate, consider two veterans in my sample who had served together. Next, assume that each of the veterans has a neighbor who had served in the Navy, on the same ship. The coefficient of the neighborhood-block effect might be biased because the two possible paths through which the effect passes cannot be distinguished. (The two possible paths are the comrade's neighbor to own neighbor to the veteran considered, or from the comrade's neighbor to the veteran's comrade to the veteran considered.) This concern is addressed by including only those who have no neighbors who are veterans.[31]

As shown in the previous section, the endogenous effect of the military unit is given by $\rho_A = \frac{1}{1+\frac{\delta_2}{\delta_3}}$. For calculating the endogenous effect, note that either of the pairs, *xi* (δ_2) and *xiii* (δ_3), or *xii* (δ_2) and *xiv* (δ_3), could be used to estimate the effect. In fact, one testable implication of the model is that this ratio should be the same.

Using the delta method to compute the standard errors (reported here in parentheses), the endogenous effect of the military company based on the coefficients of Table 14 is:

$\rho_A = 0.88$ (0.03) with a t-value of 26.09. Using the other set of coefficients the results are $\rho_A = 0.77$ (0.11) with a t-value of 6.62. The effect is relatively higher than the estimates obtained in the previous sections. This could possibly be due to the small sample size. Using the coefficients of Table 13, which is a much larger sample (though includes also those neighborhoods in which

[31] Of course, there are many other ways in which people across blocks might be connected. However, the only two effects considered here are that of the neighborhood and that of one's WWI military unit. The results will, in general, not be biased if these unobserved networks and connections across neighborhoods are not systematic.

there are other veterans). The endogenous effect is $\rho_A = 0.68$, and a value such as $\rho_A = .31$ is still within the 95% confidence interval..

Using the value $\rho_A = .8$, the interpretation of the point estimate of the military endogenous effect is that a 10 percentage point increase among other's unemployment (the military company members), decreases one's own likelihood of employment by 8 percentage points.

6.3 Decomposition into the Contextual and Endogenous Effects

The endogenous effect estimated in the previous section was found to be substantial in size. In this section, I provide a comparison of the endogenous and contextual effects. Note that one cannot directly compare the two since they measure the effect of different variables (say the effect of average age, and the effect of the average unemployment rate). Instead, I consider a decomposition of the marginal effect.

Throughout this section I will use as an example the marginal effect of the "percent in company who are professional, technical, managerial, clerical, or salesmen", I will denote this average as $\overline{X}_A$ (this corresponds to label *ix* in Tables 13 and 14). The marginal effect can be written as:

$$\frac{\partial y_i}{\partial \overline{X}_A} = \gamma_A + \frac{\rho_A}{1-\rho_A} \cdot [\beta + \gamma_A] \tag{6.8}$$

The first part of this effect (γ_A) is the (direct) contextual effect. The second part, $\frac{\rho_A}{1-\rho_A} \cdot [\beta + \gamma_A]$, is due to the endogenous effect (note that it equals zero if there is no endogenous effect, i.e. $\rho_A = 0$). The second part of the effect depends on the contextual effect and the own effect (β) .

Using the coefficients from Table 14, the 95% confidence interval for γ_A is $[-.15, .09]$. In fact, one cannot reject the null that $\gamma_A = 0$ (p-value=0.57). In contrast, the large endogenous effect implies a large multiplier. For instance, using $\rho_A = .7$ then $\frac{\rho_A}{1-\rho_A} > 2$. Hence, if β were equal to zero, more than twice of the marginal effect is due to the endogenous effect. Since β is so much larger than the contextual effect $\beta = 0.217$ (with a std. error of 0.097), the endogenous effect is even more important (relative to the case in which $\beta = 0$).

Similar results hold when considering the marginal effect of other covariates. These suggest that the endogenous effect is more important than the contextual effect in the case of employment. Taken literally, the results imply that it's the (un)employment status of others which matters for finding jobs, not the characteristics of others (such as whether they are professionals). This is in line with the models of job-information-transmission discussed in Section 1.

7 Conclusion

In this paper, I examined how social ties formed during World War I affect a veteran's likelihood of employment in the 1930 census. I introduced a new data set which links American infantrymen to the 1930 census, as well as their prewar draft registration records. I observe all members of the (military) company. In addition, the data contains information on the neighbors of these veterans

in the 1930 census. By considering a setting in which groups were formed due to a "natural experiment," I was able to circumvent the problems that typically arise due to endogenous group formation. I find that these networks, forged during war, have a statistically significant effect which is relatively large. In future work I hope to examine additional types of outcomes, such as the migration decision.

In the second part of the paper, I examined the case in which some members belong to multiple reference groups and proved that the endogenous and contextual effects are separately identified in the linear-in-means case. It would be of interest to apply this result to other settings in which social influences are believed to play a role. For example, consider a case in which a researcher observes the outcomes of high schoolers who come from different junior high schools.

Since almost always networks are endogenously formed, it would be hard to imagine an incentive scheme or government intervention that would radically change people's choice of association. Government intervention could help to strengthen and encourage the formation of contacts among those already likely to associate, and by doing so provide them with a network and its associated benefits. This could be the motivation for strengthening associations for minorities, women in business, etc. By better understanding how networks operate, we can better design such programs.

Social networks formed during war allow for a rare opportunity to examine the results of what would otherwise be a difficult "social experiment" to carry out.[32] One could possibly extrapolate the results of this "experiment" to discuss the merits of various programs which seek to integrate people from various socioeconomic backgrounds (such as the "bussing" of school children).

Finally, evidence supporting the existence of a (large) endogenous effect mean that any public policy that targets unemployment is underestimating the benefits of the program if it fails to account for the "social multiplier" effect.

References

Akerlof, G. A. (1997). Social distance and social decisions. *Econometrica 65*, 1005–1027.

Angrist, J. D. (1990). Lifetime earnings and the vietnam era draft lottery: Evidence from social security administrative records. *American Economic Review 80*, 313–336.

Anselin, L. (2001). Spatial econometrics. In B. Baltagi (Ed.), *A Companion to Theoretical Econometrics*, Oxford, pp. 310–330. Blackwell.

Bayer, P., R. Pintoff, and D. E. Pozen (2004). Building criminal capital behind bars: Peer effects in juvenile corrections. *Working Paper*.

Bayer, P., S. Ross, and G. Topa (2005). Place of work and place of residence: Informal hiring networks and labor market outcomes. *NBER working paper series no.11019*.

Bentolila, S., C. Michelacci, and J. Suarez (2004). Social contacts and occupational choice. *CEMFI Working Paper 0406*.

Bertrand, M., E. Luttmer, and S. Mullainathan (2000). Network effects and welfare cultures. *The Quarterly Journal of Economics 115*(3), 1019.

[32] One recent exception is U.S. Housing and Urban Development Moving to Opportunity Program which is mentioned in Section 1.1

Bewley, T. F. (1999). *Why Wages Don't Fall During a Recession*. Cambridge: Harvard University Press.

Boorman, S. A. (1975). A combinatiorial optimization model for transmission of job information through contact networks. *The Bell Journal of Economics 6*(1), 216.

Brock, W. A. and S. N. Durlauf (2001a). Discrete choice with social interactions. *Review of Economic Studies 68*, 235–260.

Brock, W. A. and S. N. Durlauf (2001b). Interactions-based models. In J. Heckman and E. Leamer (Eds.), *Handbook of Econometrics*, pp. 3298–3380. Elsevier Science.

Brock, W. A. and S. N. Durlauf (2004). Identification of binary choice models with social interactions. *Working Paper*.

Calvó-Armengol, A. and M. O. Jackson (2004). The effects of social networks on employment and inequality. *The American Economic Review 94*(3), 426.

Chambers, J. W. (1987). *To Raise an Army: The Draft Comes to Modern America*. New York: The Free Press.

Costa, D. and M. Kahn (2003). Cowards and heroes: Group loyalty in the american civil war. *Quarterly Journal of Economics 118*, 519–548.

De Schweinitz, D. (1932). *How Workers Find Jobs: A Study of Four Thousand Hosiery Workers in Philadelphia*. Philadelphia: University of Philadelphia Press.

Dickinson, J. (1922). *The Building of an Army*. New York: The Century Co.

Duncan, G. J., J. Boisjoly, M. Kremer, D. M. Levy, and J. Eccles (2005). Peer effects in drug use and sex among college students. *Journal of Abnormal Child Psychology 33*(3), 375–385.

Fogel, Robert W., e. a. (2000). Public use tape on the aging of veterans of the union army: Military, pension, and medical records, 1820-1940 [computer file].

Granovetter, M. (1974, 1995). *Getting A Job: A Study of Contacts and Careers 2nd Edition*. The University of Chicago Press.

Greenwald, B. C. (1986). Adverse selection in the labour market. *The Review of Economic Studies 53*, 325–347.

Heckman, J. J. (1978). Dummy endogenous variables in a simultaneous equation system. *Econometrica 46*, 931–959.

Ioannides, Y. M. and L. D. Loury (2004). Job information networks, neighborhood effects and inequality. *Journal of Economic Literature 42 (4)*, 1056–1093.

Jackson, M. O. (2004). A survey of models of network formation: Stability and efficiency. In G. Demange and M. Wooders (Eds.), *Group Formation in Economics; Networks, Clubs and Coalitions*, Chapter 1. Cambridge U.K.: Cambridge University Press.

Kling, J., J. Liebman, and L. Katz (2005). Experimental analysis of neighborhood effects. *NBER Working Paper No. 11577*.

Krauth, B. (2004). Peer effects and selection effects on youth smoking in california. *Working Paper*.

Manski, C. F. (1993). Identification of endogenous social effects: The reflection problem. *The Review of Economic Studies 60*(3), 531–542.

Maryland-War-Records-Commission (1933). *Maryland in the World War 1917-1919: Military and Naval Service Records*, Volume I-II. Baltimore: Twentieth Century Press.

Meyer, B. (1995). Natural and quasi- experiments in economics. *Journal of Business and Economic Statistics 13*, 151–162.

Moffitt, R. A. (2001). Policy interventions, low-level equilibria, and social interactions. In S. Durlauf and H. P. Young (Eds.), *Social Dynamics*, pp. 45. Washington, D.C.: Brookings Institution Press.

Montgomery, J. D. (1991). Social networks and labor-market outcomes: Towards an economic analysis. *The American Economic Review 81, Issue 5*, 1408–1418.

Mortensen, D. and T. Vishwanath (1994). Personal contacts and earnings. it is who you know! *Labour Economics 1*, 187–201.

Mortensen, D. T. and C. A. Pissarides (1999). New developments in models of search in the labor market. In O. Ashenfelter and D. Card (Eds.), *Handbook of Labor Economics Vol.*, pp. 2567–2627. Amsterdam: Elsevier Science.

Newey, W. K. (1987). Efficient estimation of limited dependent variable models with endogenous explanatory variables. *Journal of Econometrics 36*, 231–250.

Paula, A. D. (2005). Inference in a synchronization game with social interactions. *Working Paper*.

Rivers, D. and Q. H. Vuong (1988). Limited information estimators and exogeneity tests for simultaneous probit models. *Journal of Econometrics 39*, 347–366.

Sacerdote, B. (2001). Peer effects with random assignment: Results for dartmouth roommates. *Quarterly Journal of Economics 116*(2), 681.

Stutzer, A. and R. Lalive (forthcoming). The role of social work in job searching and subjective well-being. *Journal of the European Economic Association*.

Thorn, H. C. (1920). *History of the 313th U.S. Infantry*. Wynkoop Hallenbeck Crawford Co.

Topa, G. (2001). Social interactions, local spillovers and unemployment. *The Review of Economic Studies 68*, 261–295.

Viechnicki, P. (2003). Properties and availability of the union army life-cycle sample. In D. L. Costa (Ed.), *Health and Labor Force Participation over the Life Cycle: Evidence from the Past*, pp. 323–334. The University of Chicago Press.

Zimmerman, D. J. (2003). Peer effects in academic outcomes: Evidence from a natural experiment. *The Review of Economics and Statistics 85*, 9–23.

Appendices

Appendix I- Linking and Data Collection Procedures

The core component of the data is the unit affiliation of each person at the (military) company level. Using unit rosters and service records, the list of men in each unit was created.[33] In addition, these sources provided information on the date of birth, place of birth, address prior to enlistment, and the service record during the war. The service records include information on dates served in each unit (including enlistment and discharge date), campaigns in which the soldier participated,

[33] After WWI, each state was required by Congress to establish a War History Commission. The Commissions were provided with the service records by the Federal Government. For instance, in the case of Maryland, the records of the 70,000 who had served during WWI were published by the Commission (Maryland War Records Commission 1933). I have obtained the records for a number of states. In addition, many units published a history, many of which included the unit's roster.

wounds, citations, disciplinary action, ranks and promotion dates, and a characterization of the type of discharge.

These sources provide a very detailed account of the experience of each unit (and the men within the unit). Since men were moved and transferred between units, a soldier might have been affiliated with a few units. The minimal criteria I used for including a veteran in my sample was to actually have shipped with the unit overseas (the units examined are all infantry units which had fought overseas). If a soldier had spent only a few days at a unit it is unlikely that this would be a sufficient amount of time to allow for any meaningful connection to form.

Next, every person in the units chosen was searched for in two sources, the 1917/8 draft records, and the 1930 US Census of Population.[34] The last step of the data collection process included obtaining the 1930 census information of a veteran's neighbors. The census schedules from which the information was collected were recorded in the order in which the census taker had visited the households. Hence, finding one's neighbors in the 1930 census is straightforward (the schedules also include the street and number address for the larger towns and cities).

Each match between a veteran and his (potential) 1930 census information was assigned one of 20 categories. For instance, one of the categories include those for which a veteran is found to be living at the same exact street and number address both in 1917 and 1930 and has the "correct" age in 1930. Categories were then assigned quality codes and ranked (quality wise).

As in all historical sources, matching people across datasets presents some complications. However, relative to other researchers who had linked individuals across historical censuses, in my case there was more additional relevant-to-linking information on each individual. For example, many of the military records had a full date of birth (day, month, and year), which helped identify someone in the draft records (the draft records have a full date of birth). In the 1930 census, there was a question regarding participation in WWI, which, again, greatly aided in linking. Other information which proved useful was place of birth, as well the house number and street address (for those cases in which a person had stayed in the same exact address). These factors account for my relatively high match rates.

The linkage rates for each of the sources when considering only the "high quality" matches is 64% for the 1930 census and 75% for the draft records.[35] These linkage rates are comparable to the rates reported by Viechnicki (2003) who examined a sample of Union Army veterans that were linked to the censuses of 1850 through 1910.[36]

Table A.1 provides a breakdown of the reasons veterans were not matched to the 1930 census. In 85% of the cases, the reason for not linking a veteran are that no possible match is found (names are searched for in the entire US census). The two most likely reasons a person is not found in the 1930 census are either death, or the person was missed by the census takers. The records were also searched according to the Soundex system, which allows for variation in spelling. The extremely common name reason (6.5% of non-linked cases) corresponds to a case in which there were over 20 people with the same name in the 1930 census. Finally, 8.5% of the non-linked records were a case in which two people were indistinguishable from one another (same name, same birth date and birth state, etc.).

[34] Both the draft registration records and the 1930 census are publicly available through the U.S. National Archives (NARA).

[35] The first number is in fact downward biased, since I didn't account for the fact that some of the men had died or immigrated from the US by 1930.

[36] The Union Army Study is a monumental data collection effort led by Fogel et al. (2000). It's goal was to study and better understand aging and mortality. It contains the members of 303 companies in the American Civil War Union Army. The base sample consists of the military records of the 35,570 individuals in those companies. The sample was then linked to the census of 1860, 1870, 1880, 1900, and 1910, as well as other pension records.

The only statistically significant variable (and only in some specifications) in predicting non-linking is age, though the marginal effect is small (less than half of a percentage point per an additional year of age). This is consistent with mortality rates increasing in age.

Table A.1: Reasons for non-linkage in the 1930 census

Extremely common name	6.5%
Two people with "exact" information	8.5%
Not found	85.0%

In addition, to insure higher reliability, for 90% of my sample linking and transcribing of the 1930 Census data were independently done by at least two people. All discrepancies were resolved by a third person. In the case of linking, only one discrepancy was found. In about 10% of the cases, one linker found a match which the other had missed (or was too cautious to link). This is partially a reflection of the fact that linkers were instructed to err on the side of not linking as opposed to linking the wrong person.

Appendix II- A Typology of WWI Units

There are a number of ways by which the US Army during WWI can be classified. Examining the army at the division level, I focus here on three factors according to which the divisions can be characterized. How the division was formed, the variability in the geographical origin of its soldiers, and the amount of overseas battle experienced.

The army divisions during WWI were formed in three primary ways. The Regular Army, divisions which were composed of (former) National Guard units, and the National Army which consisted of inducted (drafted) soldiers. The regular army divisions (numbered 1-25) were the "professional" army. When the US entered the war, there was a need for an enormous number of soldiers, a demand which could not be met by the existing regular army.

The National Guard (NG) units were already organized groups, many with actual military experience (for example, in the Mexican border fighting in 1916) and a long legacy (Civil War, and the American-Spanish War). A decision was made to use them instead of recruiting and assembling new units "from scratch". These units were "federalized" and were used to form divisions in the 26-75 number range. (Most of the divisions were assembled from units from a few states, thus giving them nicknames such as the "Blue and Gray" or the "Rainbow Division", which included units from the National Guards of 26 states, and D.C.)

This still was not enough to meet the demand for soldiers, and a national draft was enacted. The drafted soldiers made up the divisions numbered 76 and up.

The divisions also exhibit variation in the geographical composition of the soldiers. As expected, the regular army units consisted of soldiers from the entire US. The divisions which originated in NG units were, of course, locally (state level) based. The divisions consisted of soldiers anywhere from one state (Divisions 27, 28, 33, and 37), a few states, or many states. Each division is further divided into regiments and battalions. In the NG based divisions, each regiment within the division was a former NG unit(s) (For example, in the 42nd Division, the 165th Infantry Regiment was based on the 69th New York Infantry).

The 'drafted' divisions were either drawn from the population 'at large' or were drawn from a specific region, or a few states. For the units I have examined, the organization within the drafted divisions was geographically based (say at the regiment level). For example, within the 80th division, a drafted division, the 317th infantry regiment consisted primarily of men from Virginia, while the 319th infantry regiment primarily consisted of Pennsylvanians.

Last, a distinction can be made according to whether or not the divisions were sent oversees and participated in battles or not (as well as a more continuous measure of the number of days spent oversees and number of days spent in battles). However, this is not a concern in terms of sample selection since the magnitude of the war experience does not depend on the 'type' of division.

Appendix III- Proposition 1

In this appendix, I provide some details on parts of the proof of Proposition 1 in Section 5.1.

The system of interest is:

$$\begin{aligned} y_{i,g=2} &= \alpha + \beta x_{i,g=2} + \gamma_A Z_{g=1\&2} + \gamma_B Z_{g=2\&3} + \frac{\rho}{3}[m_1 + m_2 + m_3] + \epsilon_{i,g=2} \\ y_{i,g=1} &= \alpha + \beta x_{i,g=1} + \gamma_0 Z_{g=1\&2} + \frac{\rho}{2}[m_1 + m_2] + \epsilon_{i,g=1} \\ y_{i,g=3} &= \alpha + \beta x_{i,g=3} + \gamma_0 Z_{g=2\&3} + \frac{\rho}{2}[m_2 + m_3] + \epsilon_{i,g=3} \end{aligned} \tag{7.1}$$

Taking expectation of each equation (using assumption (i)) and since $Z_g = E[x_t | t \in g] \ \ \forall g$:

$$\begin{aligned} m_2 &= \alpha + \beta \bar{X}_2 + \frac{\gamma_A}{2}[\bar{X}_1 + \bar{X}_2] + \frac{\gamma_B}{2}[\bar{X}_2 + \bar{X}_3] + \frac{\rho}{3}[m_1 + m_2 + m_3] \\ m_1 &= \alpha + \beta \bar{X}_1 + \frac{\gamma_0}{2}[\bar{X}_1 + \bar{X}_2] + \frac{\rho}{2}[m_1 + m_2] \\ m_3 &= \alpha + \beta \bar{X}_3 + \frac{\gamma_0}{2}[\bar{X}_2 + \bar{X}_3] + \frac{\rho}{2}[m_2 + m_3] \end{aligned} \tag{7.2}$$

One can then solve the system as a linear projection of (m_1, m_2, m_3) on $(1, \bar{X}_1, \bar{X}_2, \bar{X}_3)$:

$$\begin{aligned} m_1 =& \theta_0 + \theta_1 \bar{X}_1 + \theta_2 \bar{X}_2 + \theta_3 \bar{X}_3 \\ m_2 =& \theta_0 + \theta_4 \bar{X}_1 + \theta_5 \bar{X}_2 + \theta_6 \bar{X}_3 \\ m_3 =& \theta_0 + \theta_3 \bar{X}_1 + \theta_2 \bar{X}_2 + \theta_1 \bar{X}_3 \end{aligned} \tag{7.3}$$

Finally, one can substitute 7.3 back into Eq. 7.1 (where the equation for group 3 is symmetrical to the case g=1)

$$\begin{aligned} y_{i,g=1} &= \frac{\alpha}{(1-\rho)} + \beta x_{i,g=1} + \frac{-12\gamma_0 - 6\rho\gamma_A + 3\rho^2\gamma_A - 12\rho\beta + 10\rho\gamma_0 + 6\rho^2\beta + 2\rho^3\beta}{-2(12 - 16\rho + 3\rho^2 + \rho^3)}\bar{X}_1 \\ &+ \frac{3\rho\gamma_B + 6\rho\beta - 2\rho\gamma_0 + 3\rho\gamma_A + 6\gamma_0}{-2(\rho^2 + 5\rho - 6)}\bar{X}_2 + \frac{\rho(-3\rho\gamma_B + 2\rho\gamma_0 + 4\rho\beta + 6\gamma_B)}{2(12 - 16\rho + 3\rho^2 + \rho^3)}\bar{X}_3 + \epsilon_{i,g=1} \end{aligned} \tag{7.4a}$$

$$\begin{aligned} y_{i,g=2} &= \frac{\alpha}{(1-\rho)} + \beta x_{i,g=2} + \frac{-3\rho\gamma_A + 2\rho\gamma_0 + 4\rho\beta + 6\gamma_A}{-2(\rho^2 + 5\rho - 6)}\bar{X}_1 + \\ &+ \frac{2\rho^2\beta + 4\rho\gamma_0 - 3\rho\gamma_A - 3\rho\gamma_B + 4\rho\beta + 6\gamma_B + 6\gamma_A}{-2(\rho^2 + 5\rho - 6)}\bar{X}_2 + \\ &+ \frac{-3\rho\gamma_B + 2\rho\gamma_0 + 4\rho\beta + 6\gamma_B}{-2(\rho^2 + 5\rho - 6)}\bar{X}_3 + \epsilon_{i,g=2} \end{aligned} \tag{7.4b}$$

Note that while the expressions involve many of the original coefficients, as explained in Section 5.1, one can compute the endogenous effect, ρ, by looking at the coefficients of $\bar{X}_3$ in the system of equations (7.4).

Table 1- Summary Statistics
World War Veterans Sample (*n=1,295**)

Variable	Mean (Std. Dev.)
Age (in 1918)	25.67 (2.87)
Wounded during WWI (all levels, conditional on survival)	15.36%
Sustained severe wound during WWI (conditional on survival)	2.70%
Occupational income score** (prewar)	25.96 (8.85)
Occupational income score** (postwar)	27.89 (8.92)
Unemployed in 1930	6.85%
In the labor force (1930)	96.02%
Home owner (1930)	62.34%
Married (1930)	68.13%
Died as a result of battle	9.87%
Died from disease during war	2.01%
Died in accident during war	0.16%

* These are the men who had survived the war. All but the last three rows are based on the surviving sample size.
** Score ranges from 3 to 80. Measure available only for those linked.
All men in the veteran sample are white, as the army in WWI was segregated.

Table 2- Summary Statistics
Neighbors of Veterans Sample, 1930 census(*n=31,678*)

Variable	Mean
Age (in 1930)	30.26
Veteran Status (any war)	5.10%
Male	49.55%
Unemployed in 1930 Census	7.62%
Unemployment among males in the 1930 Census	8.14%
Married (1930)	45.46%

Figure 3: <u>Within-Company Distribution of Town of Residence Prior to Enlistment</u>
Sample: Maryland Men in the Twelve Infantry Companies of the 313th Infantry (*n=941*)

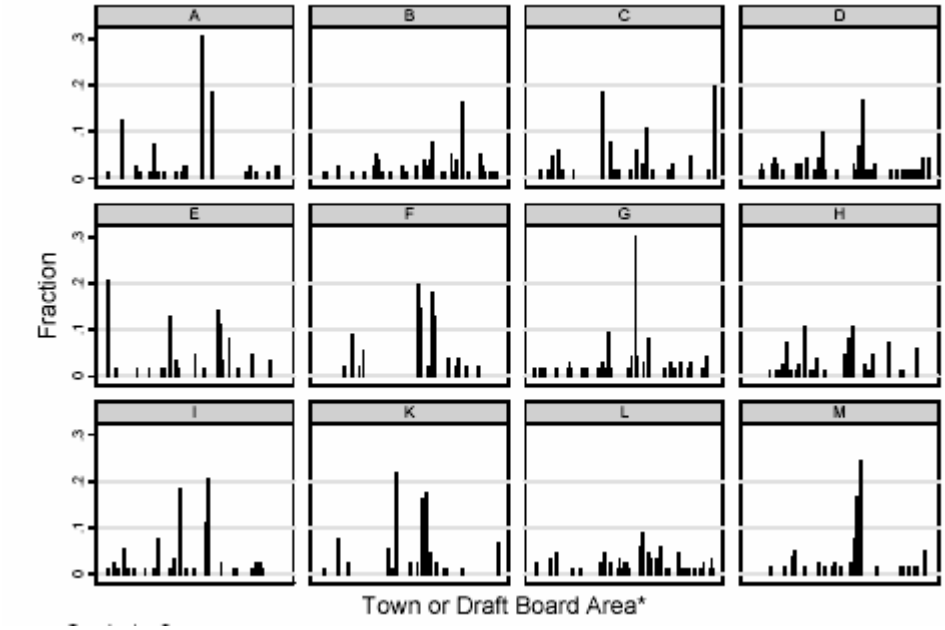

Fraction of company members originating from each town reported on the vertical axis.
(Town location on axis is the same across companies)
*194 towns in Maryland.
Due to the size of Baltimore (20 times larger than the next town), Baltimore was partitioned into draft boards (draft board size was approximately 30,000 people)

Figure 4: <u>Infantry Division Organizational Chart</u>

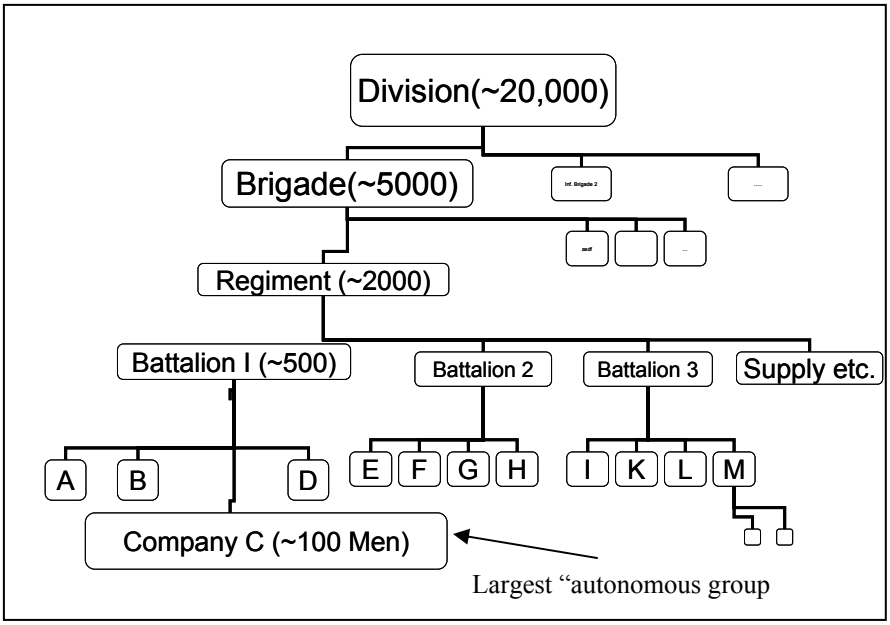

Notes: Number of men in parentheses
Sizes are for illustration of relative magnitude only.

Table 3a- Characteristics Consistent with Random Assignment
World War Veterans Sample in 1917/8

Chi-squre test

Variable (binary)	p-value*
Inducted in Maryland	0.467
Not married before enlistment	0.547
Prewar occupational score greater than 31 (the cutoff for the top quartile for the entire population in the census of 1920) **	0.575
Born in Maryland	0.660
At least one parent born outside of the US	0.567
Both parents born in the US	0.431
Born in the year 1888	0.140
Born in the year 1889	0.468
Born in the year 1890	0.710
Born in the year 1891	0.413
Born in the year 1892	0.174
Born in the year 1893	0.450
Born in the year 1894	0.211
Born in the year 1895	0.743
Born in the year 1896	0.111
Killed or wounded during war	0.528
Died as a result of battle	0.192

Table 3b- Kruskal-Wallis test***

Variable	p-value*
Birth year	0.47
Prewar Occupational Income Score** (for those born before 1895, that is, beyond college age)	0.33

Notes for both tables:
* Null hypothesis tested: distribution is consistent with random assignment
** Information only available for those linked to draft records.
*** A nonparametric (rank sum) test for "equivalence" of distribution

Table 4- Distribution of Occupational Income Score for sample and 1920 Census

	Mean	Min	Max	Std. Dev.	First Quartile	Median	Third Quartile
My sample of veterans in 1917/8 (prewar)	25.96	4	80	8.85	22	25	32
All white males from Maryland ages 21-30 (1920 Census)	24.88	4	80	10.23	20	24	32
All white males ages 21-30 (1920 Census)	23.42	3	80	10.21	14	23	30

The last two rows were calculated from the 1920 IPUMS sample.

Table 5a- US Army Death Rates In Major Wars

	Died in Battle	Percent Died during Service
Civil War (Union Army Only)	6.49%	16.89%
World War I	1.24%	2.62%
World War II	2.09%	2.83%
Korean War	0.98%	1.06%
Vietnam War	0.71%	0.87%

Source: Author's calculations based on www.globalsecurity.org/military/ops/casualties.htm

Table 5b- A Comparison of Battle Deaths during WWI

Russia	1,700,000
Germany	1,600,000
France	1,385,300
Britain	900,000
Austria	800,000
Italy	364,000
Turkey	250,000
Serbia and Montenegro	125,000
Belgium	102,000
Romania	100,000
Bulgaria	100,000
United States	**50,300**
Greece	7,000
Portugal	2,000

Source: Maryland War Records Commission (1933)

Table 6- Probit Regressions including the effect of peers unemployment rate

WWI Veterans in the Census of 1930. Dependent variable- Employment

	1	2	3	4	5	6	7
Unemployment Rate among company members						-9.811***	-10.323***
						(1.171)	(3.012)
						[-0.391]	[-0.377]
Unemployment Rate among neighbors							-4.049***
							(1.041)
							[-0.148]
percent of company members not working					-7.464***		
					(1.282)		
					[-0.298]		
Is over 40	-0.581***	-0.722***	-0.707**	-1.128**	-0.776***	-0.784***	-0.865***
	(0.218)	(0.259)	(0.322)	(0.500)	(0.239)	(0.237)	(0.280)
	[-0.093]	[-0.065]	[-0.048]	[-0.236]	[-0.06]	[-0.061]	[-0.067]
Head of household	0.159	0.171	0.418*	0.425	0.211	0.202	0.3
	(0.183)	(0.209)	(0.247)	(0.325)	(0.237)	(0.236)	(0.225)
	[0.019]	[0.009]	[0.019]	[0.052]	[0.009]	[0.009]	[0.013]
Corporal Rank	0.656**				0.609**	0.584**	0.493
	(0.301)				(0.290)	(0.290)	(0.344)
	[0.055]				[0.017]	[0.017]	[0.014]
Sgt. Rank	0.149						
	(0.245)						
	[0.015]						
Mess or supply sgt.	-0.146						
	(0.412)						
	[-0.018]						
wounded during WWI	-0.073						
	(0.254)						
	[-0.009]						
Lives in Baltimore		-0.076					
		(0.196)					
		[-0.004]					
Constant	1.399	6.908	12.158	6.819	7.961	8.075	8.225
Rank, and whether wounded dummies		Y	Y	Y	Y	Y	Y
Occupation Fixed Effects		Category	Category	Each Occupation	Category	Category	
County Fixed Effects				Y			
Observations	563	517	300	170	529	529	494
Pseudo R-squared	0.06	0.17	0.20	0.31	0.20	0.21	0.28

Standard errors in parentheses

* significant at 10%; ** significant at 5%; *** significant at 1%

Marginal effects [dF/dx] at the mean value of x in square brackets.

For binary (dummy) variables, the marginal effect is calculated for the change: F(x=1)-F(x=0)

Table 7- Probit Regressions including the effect of peers unemployment rate
Neighborhoods in the Census of 1930. Dependent variable- Employment

	1	2	3	4	5	6	7
Block Unemployment rate (only males)							-5.145*** (0.203) [-0.478]
Block Unemployment rate						-5.216*** (0.217) [-0.502]	
Age	0.022*** (0.007) [0.003]				0.023** (0.009)	0.016* (0.009) [0.002]	0.016* (0.009) [0.001]
Age^2	0.000 (0.000)				-0.000 (0.000)	-0.000*** (0.000) [-0.000]	-0.000*** (0.000) [-0.000]
War veteran	0.000 (0.057)	0.008 (0.060) [0.001]	0.001 (0.061)	-0.003 (0.065)	-0.082 (0.071)	-0.030 (0.067) [-0.003]	-0.043 (0.068) [-0.004]
Head of household	0.196*** (0.054) [0.027]	0.183*** (0.054) [0.025]	0.170*** (0.065) [0.025]	0.081 (0.069) [0.01]	0.233*** (0.084)	0.127* (0.076) [0.013]	0.130* (0.077) [0.012]
Is married	0.143*** (0.051) [0.020]	0.148*** (0.051) [0.021]	0.216*** (0.063) [0.033]	0.220*** (0.067) [0.029]	0.167** (0.081)	0.156** (0.073) [0.016]	0.141* (0.074) [0.014]
Is male	-0.272*** (0.051) [-0.033]	-0.281*** (0.051) [-0.034]					
Is under 25		-0.073 (0.058)	-0.089 (0.068) [-0.013]	-0.077 (0.070) [-0.01]			
age_35_44		-0.056 (0.056) [-0.008]	-0.097 (0.061) [-0.014]	-0.106* (0.064) [-0.014]			
age_45_54		-0.149** (0.061) [-0.022]	-0.192*** (0.067) [-0.030]	-0.223*** (0.070) [-0.031]			
age_55_64		-0.262*** (0.069) [-0.042]	-0.313*** (0.074) [-0.053]	-0.354*** (0.078) [-0.055]			
age_65_74		-0.665*** (0.082) [-0.137]	-0.661*** (0.090) [-0.139]	-0.691*** (0.096) [-0.134]			
age_75plus		-0.617*** (0.140) [-0.126]	-0.698*** (0.148) [-0.153]	-0.677*** (0.177) [-0.134]			
Neighborhood block Fixed Effects					**Y**		

Continued on next page→

(continued)

Table 7- Probit Regressions including the effect of peers unemployment rate

Neighborhoods in the Census of 1930. Dependent variable- Employment (binary)

	1	2	3	4	5	6	7
Race and occupation Fixed Effects	Race only	Race only	Race only	Y	Y	Y	Y
Constant	1.247	1.606	1.318	2.022	0.692	2.273	2.311
Observations	11037	11085	8806	8598	5187	8554	8554
Pseudo R-squared	0.02	0.02	0.03	0.07	0.11	0.20	0.22

Standard errors in parentheses

* significant at 10%; ** significant at 5%; *** significant at 1%

Marginal effects [dF/dx] at the mean value of x in square brackets.

For binary (dummy) variables, the marginal effect is calculated for the change: F(x=1)-F(x=0)

Table 8- "Reduced Form" Probit Regressions

Veterans Sample and the Neighborhoods Sample in the Census of 1930.
Dependent variable- Employment

	Veteran Sample				Neighborhoods Sample	
	1	2	3	4	5	6
Over 40 years old	-0.781***	-0.661***	-0.739***	-0.794***		
	(0.227)	(0.229)	(0.238)	(0.228)		
	[-0.079]	[-0.085]	[-0.106]	[-0.074]		
Age					0.029***	0.011
					(0.008)	(0.008)
					[0.004]	[0.001]
Age^2					-0.000***	-0.000***
					(0.000)	(0.000)
					[0.000]	[0.000]
Is married	0.175	0.238				0.282***
	(0.267)	(0.264)				(0.048)
	[0.011]	[0.022]				[0.038]
Average age of neighborhood block members who are in the labor force			-0.045		0.065**	0.060*
			(0.148)		(0.031)	(0.031)
			[-0.004]		[0.008]	[0.007]
Average of Age^2 among neighborhood block			0.001		-0.001*	-0.001*
			(0.002)		(0.000)	(0.000)
			[0.000]		[0.000]	[0.000]
wounded during WWI	-0.137	-0.113				
	(0.267)	(0.271)				
	[-0.008]	[-0.01]				
% in company over 40	-3.593**	-4.543**	-4.215**	-4.122***		
	(1.425)	(1.953)	(1.897)	(1.347)		
	[-0.199]	[-0.377]	[-0.371]	[-0.203]		
Co. marital rate	2.194	1.881				
	(1.769)	(2.218)				
	[0.121]	[0.156]				
% of co. wounded	0.02	0.048				
	(1.334)	(1.432)				
	[0.001]	[0.004]				
Company average of the average neighborhood block age				-1.977***		
				(0.458)		
				[-0.097]		
Company average of the average neighborhood block age^2				0.022***		
				(0.005)		
				[0.001]		
Head of household (HH)			0.326			
			(0.231)			
			[0.033]			

Continued→

(continued)

Table 8- "Reduced Form" Probit Regressions

	Veteran Sample				Neighborhoods Sample	
	1	2	3	4	5	6
% in co. who are HH			2.056 (3.979) [0.181]			
Own occupation Professional, technical, managerial, Clerical, or Sales			1.470*** (0.351) [0.121]			
Own occupation Craftsmen, Operatives, or laborers			0.379 (0.278) [0.034]			
% in co. who are Professional, technical, managerial, Clerical, or Salesmen			2.000 (2.367) [0.176]			
% in co. who are Craftsmen, Operatives, or laborers			3.328 (2.823) [0.293]			
% in neighborhood who are Professional, technical, managerial, Clerical, or Salesmen			-0.811* (0.423) [-0.071]			
% in Neighborhood who are Craftsmen, Operatives, or laborers			-1.141** (0.532) [-0.101]			
% in co. who are farmers		-6.366** (2.713) [-0.528]				
% in co. who are Clerical and Salesmen		-3.423 (3.476) [-0.284]				
% in co. who are Craftsmen		-0.526 (3.116) [-0.044]				
% in co. who are Operatives, service workers, and laborers		-3.664 (2.708) [-0.304]				
Constant	5.919	4.028	-0.682	46.531	0.346	0.639
Occupation Category (12 categories) Fixed Effects	Y			Y	Y	Y
Observations	529	550	523	529	8,869	8,869
Pseudo R-squared	0.16	0.14	0.15	0.17	0.06	0.07

Robust standard errors in parentheses (assume correlation within company)
significant at 10%; ** significant at 5%; *** significant at 1%
Marginal effects [dF/dx] at the mean value of x in square brackets.
Samples: Columns 1-4, WWI veterans linked to the census. Columns 5-6, neighbors of the WWI sample.
Excluded category in column 2- Professional, technical and managerial. Excluded category in column 3- farmers.

Table 9- Probit Regressions Examining Alternative Group Specifications

WWI Veterans in the Census of 1930. Dependent variable- Employment

	(1)	(2)	(3)	(4)
Nonworking rate among **battalion** members	-5.703 (5.608) [-0.535]	-0.053 (6.005) [-0.004]		
Nonworking rate among members of **another company within the same regiment**			0.438 (1.979) [0.042]	0.575 (1.933) [0.048]
Nonworking rate among company members		-6.532*** (2.190) [-0.548]		-6.559*** (2.095) [-0.551]
Over 40	-0.659*** (0.220) [-0.094]	-0.681*** (0.224) [-0.09]	-0.681*** (0.219) [-0.099]	-0.685*** (0.224) [-0.091]
Wounded during WWI	-0.04 (0.247) [-0.004]	-0.075 (0.253) [-0.007]	-0.053 (0.247) [-0.005]	-0.066 (0.254) [-0.006]
Corporal Rank	0.538* (0.286) [0.039]	0.538* (0.291) [0.034]	0.514* (0.284) [0.038]	0.536* (0.290) [0.034]
Occupation Category (12 categories) Fixed Effects	Yes	Yes	Yes	Yes
Constant	2.380	2.570	1.912	2.531
Observations	604	604	604	604
Pseudo R-squared	0.13	0.16	0.13	0.16

Standard errors in parentheses
* significant at 10%; ** significant at 5%; *** significant at 1%
Marginal effects [dF/dx] at the mean value of x in square brackets.
For binary (dummy) variables, the marginal effect is calculated for the change: F(x=1)-F(x=0)

Table 10- Probit Regressions using the Effect of a Pseudo Company

WWI Veterans in the Census of 1930. Dependent variable- Employment (binary)

The group outcome was "artificially" constructed replacing each veteran's outcome by the outcome of a randomly chosen white male in the same age bracket living on the same street as the veteran in the 1930 census.

	(1)	(2)	(3)	(4)
Unemployment rate among **pseudo** company members		1.196 (1.976) [0.064]	-0.042 (2.014) [-0.002]	0.954 (2.164) [0.036]
Unemployment rate among **actual** company members	-7.284*** (2.155) [-0.295]		-7.293*** (2.196)	-7.390*** (2.338) [-0.279]
Unemployment rate among neighbors				-4.090*** (1.051) [-0.155]
Over 40	-0.792*** (0.261) [-0.063]	-0.759*** (0.254) [-0.073]	-0.791*** (0.261) [-0.063]	-0.874*** (0.278) [-0.07]
Wounded during WWI	-0.158 (0.290) [-0.007]	-0.16 (0.280) [-0.01]	-0.157 (0.292) [-0.007]	-0.251 (0.313) [-0.012]
Corporal Rank	0.606* (0.339) [0.017]	0.532* (0.322) [0.021]	0.607* (0.341) [0.017]	0.504 (0.352) [0.014]
Constant	8.171	6.885	8.174	8.354
Occupation Category (12 categories) Fixed Effects	Yes	Yes	Yes	Yes
Observations	529	529	529	494
Pseudo R-squared	0.20	0.16	0.20	0.27

Standard errors in parentheses
* significant at 10%; ** significant at 5%; *** significant at 1%
Marginal effects [dF/dx] at the mean value of x in square brackets.
For binary (dummy) variables, the marginal effect is calculated for the change: F(x=1)-F(x=0)

Table 11- Prewar Location Controls

Probit Regressions for WWI Veterans in the Census of 1930.
Dependent variable- Employment

	1	2	3	4	5	6
Sample Used:	All Veterans	Those who were from towns[&] for which **less than 10** men ended up in same company	Those who were from towns[&] for which **less than 5** men ended up in same company	Those who were from towns[&] for which **less than 10** men ended up in same **regiment**	Those who were from towns[&] for which **less than 5** men ended up in same **regiment**	Within the regiment, less than half of the same town[&] members ended up in the same company
Unemployment Rate among company members	-24.807***	-11.881***	-13.208***	-12.439***	-6.114	-14.599**
	(7.238)	(3.238)	(3.816)	(3.803)	(4.751)	(6.123)
	[-1.467]	[-0.437]	[-0.542]	[-0.5]	[-0.387]	[-0.603]
Over 40	-0.61	-0.778**	-0.682*	-0.757*	-0.579	-0.351
	(0.395)	(0.340)	(0.414)	(0.432)	(0.450)	(0.555)
	[-0.056]	[-0.057]	[-0.051]	[-0.059]	[-0.056]	[-0.019]
Corporal Rank during WWI	1.230**	0.380	0.629	0.199		0.753
	(0.622)	(0.359)	(0.523)	(0.471)		(0.572)
	[0.045]	[0.011]	[0.017]	[0.007]		[0.02]
Wounded during WWI	0.366	-0.143	-0.090	-0.070	0.078	
	(0.569)	(0.338)	(0.387)	(0.403)	(0.534)	
	[0.017]	[-0.006]	[-0.004]	[-0.003]	[0.005]	
Constant	7.287	8.568	8.591	8.334	2.332	8.404
Town/Draft Board [&] Fixed Effects	**Yes**					
Occupation Category (12 categories) Fixed Effects	Yes	Yes	Yes	Yes		Yes
Constant	7.287	8.568	8.591	8.334	2.332	8.404
Observations	202	383	233	266	177	108
Pseudo R-squared	0.39	0.21	0.22	0.19	0.07	0.23

Standard errors in parentheses
* significant at 10%; ** significant at 5%; *** significant at 1%
Marginal effects [dF/dx] at the mean value of x in square brackets.
For binary (dummy) variables, the marginal effect is calculated for the change: F(x=1)-F(x=0)
[&] Large cities were subdivided according to draft boards (roughly the size of a voting precinct)

Table 12- Instrumental Variable Regressions
WWI Veterans in the Census of 1930.
Dependent variable- Employment

[>]Note: As discussed in Section 4.5, the actual coefficient estimates for columns (1) and (2) entail very restrictive assumptions. However, the test for exogeneity (the last two rows in bold) is valid even under less restrictive assumptions.

	(1)	(2)	(3)
2nd Stage Specification Estimated using	**Probit (See above note[>])** MLE	**Probit (See above note[>])** 2-stage (Newey 1987)	**Linear Probability Model** 2-stage-least-squares
IV(s) used:	Company average of the average neighborhood age	Company average of the average neighborhood age	Company average of the average: i. neighborhood age ii. neighborhood age^2, iii. neighborhood marital rate.
Percent of company members not working	-8.479* (4.663) [-.354]	-8.493* (4.761)	-0.785*** (0.303)
Over 40	-0.850*** (0.270) [-.072]	-0.851*** (0.269)	-0.122*** (0.036)
Corporal Rank	0.625* (0.346) [.018]	0.626* (0.346)	0.042 (0.028)
Constant	8.514	8.083	1.064
Observations	489	489	489
Occupation Category (12 categories) Fixed Effects	Yes	Yes	Yes
Wald Chi-Square test of exogeneity[&]	**0.07**	**0.07**	
Exogeneity p-value	**0.79**	**0.79**	

Standard errors in parentheses
* significant at 10%; ** significant at 5%; *** significant at 1%
Marginal effects [dF/dx] at the mean value of x in square brackets.
[&] The Null hypothesis is that in the 2nd stage, the coefficient for the first-stage error is equal to zero.
For binary (dummy) variables, the marginal effect is calculated for the change: F(x=1)-F(x=0)

Table 13–Evidence of an Endogenous Effect using the Reduced Form Estimates

OLS Regression corresponding to Equation 6.7

Dependent variable- Employment.(1930 Census)

(label)		
i.	Is over 40 years old	-0.118** (0.053)
ii.	Percent of company members over 40	-0.329 (0.333)
iii.	Average age of those in the labor force in neighborhood (self excluded)	0.006 (0.015)
iv.	Average of age-square of those in the labor force in neighborhood (self excluded)	-0.00007 (0.00018)
v.	Company average of the average age in neighborhood of those in the labor force	-0.094*** (0.024)
vi.	Company average of the average age-squared in neighborhood of those in the labor force	0.001** (0.000)
vii.	Own occupation professional, technical, managerial, clerical, or sales	0.180* (0.087)
viii.	Own occupation craftsmen, operatives, or laborers	0.082 (0.071)
ix.	% in co. who are professional, technical, managerial, clerical, or salesmen	1.015*** (0.311)
x.	% in co. who are craftsmen, operatives, or laborers	0.807*** (0.203)
xi.	% in neighborhood who are professional, technical, managerial, clerical, or salesmen	-0.134 (0.076)
xii.	% in neighborhood who are craftsmen, operatives, or laborers	-0.170** (0.061)
xiii.	Company average of the average % in neighborhood who are Professional, technical, managerial, Clerical, or Salesmen (Average of the above averages)	-0.952*** (0.271)
xiv.	Company average of the average % in neighborhood who are craftsmen, operatives, or laborers (Average of the above averages)	-0.368 (0.304)
	Constant	3.039
	Observations	496
	R-squared	0.09

Robust standard errors in parentheses
(assume correlation within company and independence across companies)
* significant at 10%; ** significant at 5%; *** significant at 1%
Omitted occupation is farming.
Sample: Veterans linked to the 1930 Census
Those blocks with less than 10 people in the labor force were omitted.

Table 14–Auxiliary OLS Regression Results for Computing the Endogenous Effect+

(Used to compute the coefficients in Sections 6.2-6.3)

Dependent variable- Employment.(1930 Census)

(label)		
i.	Is over 40 years old	-0.109 (0.111)
ii.	Percent of company members over 40	-0.668 (0.560)
iii.	Average age of those in the labor force in neighborhood (self excluded)	0.025 (0.046)
iv.	Average of age-square of those in the labor force in neighborhood (self excluded)	-0.000 (0.001)
v.	Company average of the average age in neighborhood of those in the labor force	-0.191** (0.071)
vi.	Company average of the average age-squared in neighborhood of those in the labor force	0.002** (0.001)
vii.	Own occupation professional, technical, managerial, clerical, or sales	0.217** (0.097)
viii.	Own occupation craftsmen, operatives, or laborers	0.029 (0.060)
ix.	% in co. who are professional, technical, managerial, clerical, or salesmen	3.177*** (0.485)
x.	% in co. who are craftsmen, operatives, or laborers	2.793*** (0.490)
xi.	*% in neighborhood who are professional, technical, managerial, clerical, or salesmen*	-0.336** (0.115)
xii.	**% in neighborhood who are craftsmen, operatives, or laborers**	-0.295** (0.126)
xiii.	*Company average of the average % in neighborhood who are Professional, technical, managerial, Clerical, or Salesmen (Average of the above averages)*	-2.718*** (0.322)
xiv.	**Company average of the average % in neighborhood who are craftsmen, operatives, or laborers (Average of the above averages)**	-1.015** (0.405)
	Constant	3.911
	Observations	145
	R-squared	0.20

Robust standard errors in parentheses
(assume correlation within company and independence across companies)
* significant at 10%; ** significant at 5%; *** significant at 1%
Omitted occupation is farming.
Sample: Veterans linked to the 1930 Census. The regression includes as a dependent variable only those for which no other WWI veteran lives in neighborhood block (to prevent biased estimates, as explained in Section 6). However, the company and neighborhood values (such as average age of neighborhood members) were computed using the entire sample. Also, those blocks with less than 10 people in the labor force were omitted.
+ For example, the endogenous effect of the military unit is a function of the ratio of *xii/xiv* or *xi/xiii* (where the roman numerals are the labels of the coefficients in the above table).