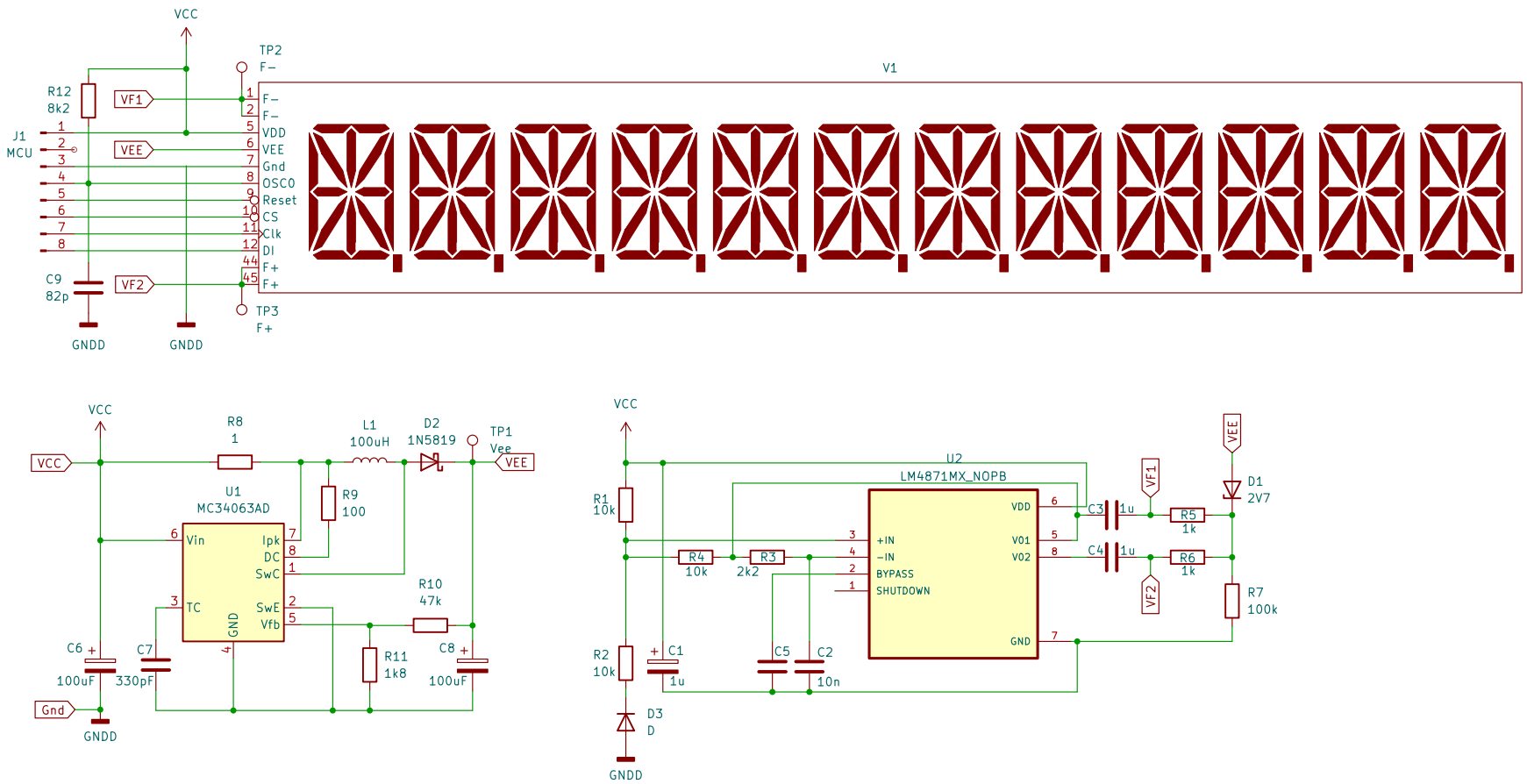

H1 MountingHole
H2 MountingHole
H4 MountingHole
H3 MountingHole

© rlnd

Sheet: /
File: VFD−Driverboard.kicad_sch

Title: VFD driver board HCS−12SS59T

Size: A4	Date: 2024−07−17	Rev: 1.1.1
KiCad E.D.A. 8.0.3		Id: 1/1