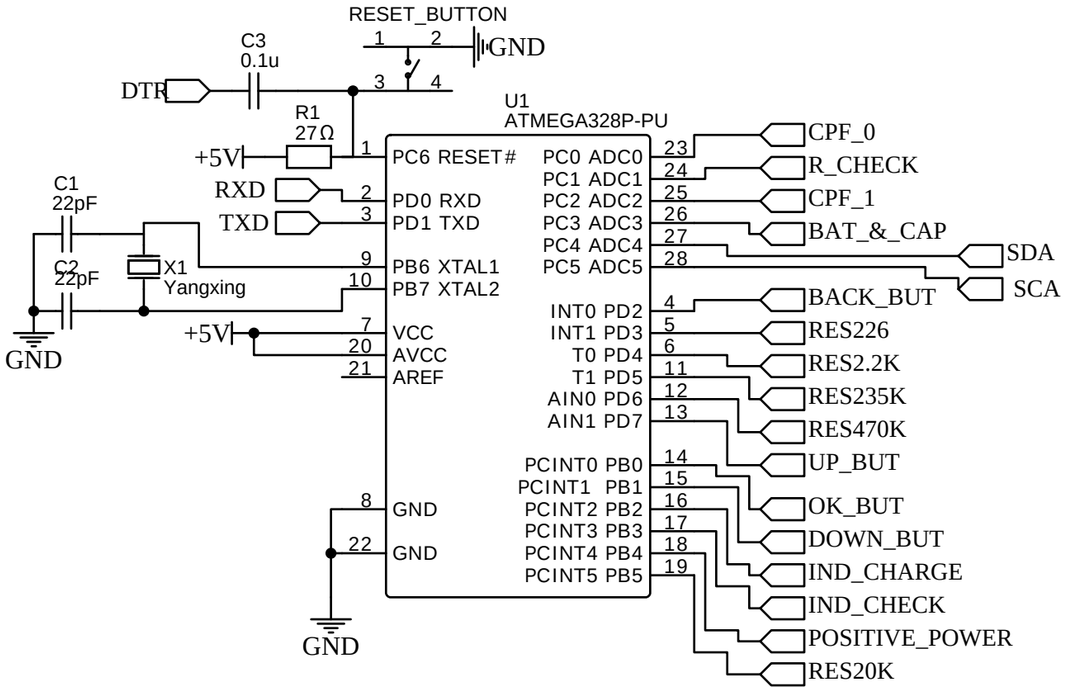

MICROCONTROLLER SECTION

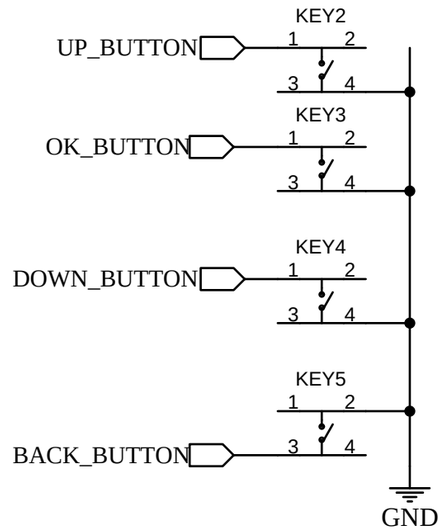

BUTTON_CONTROL_SECTION

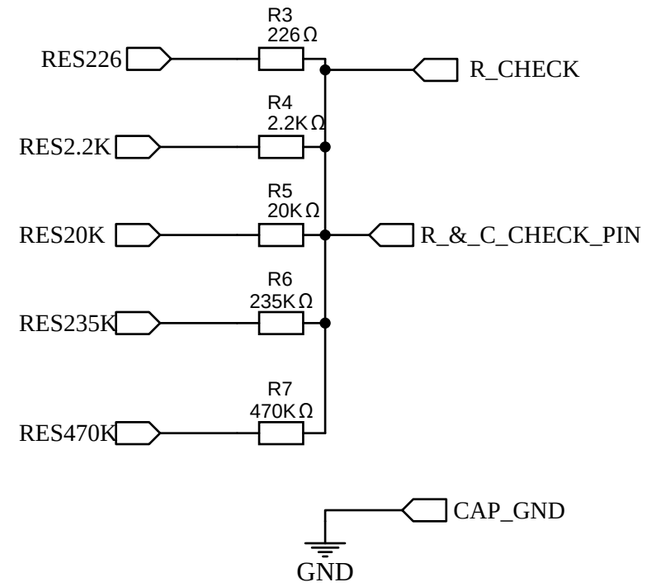

RESISTOR & CAPACITOR SECTION

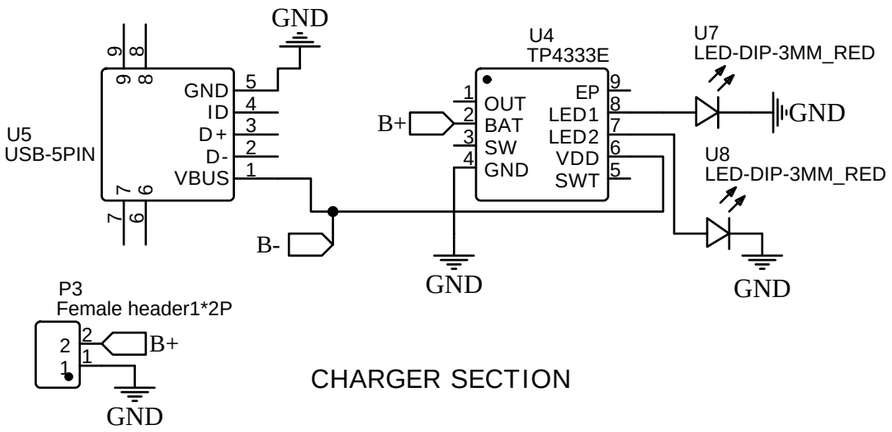

CHARGER SECTION

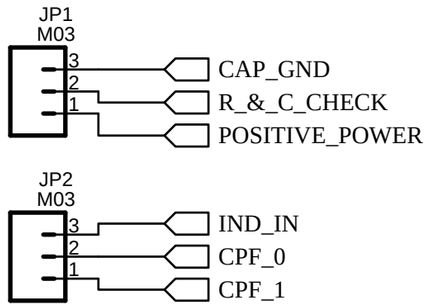

LCR OUT CONNECTOR

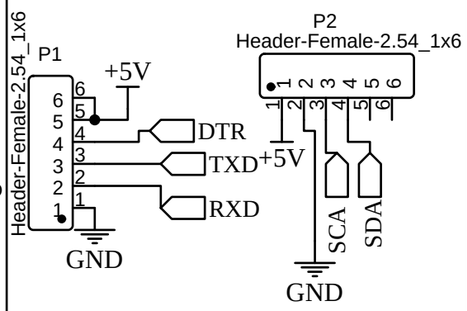

LCD DISPLAY & SERIAL COM

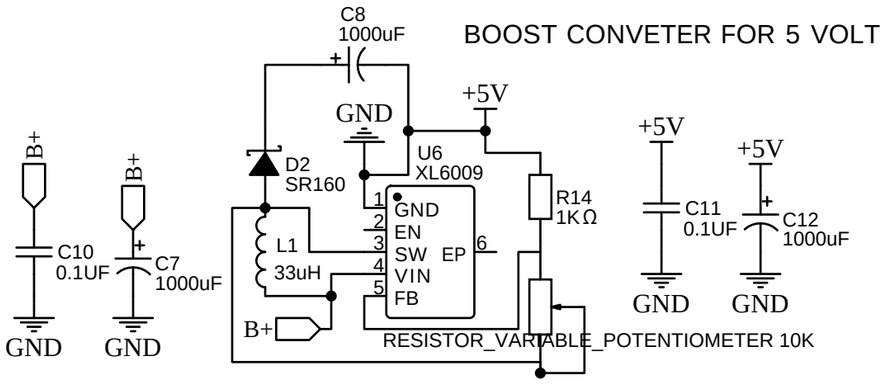

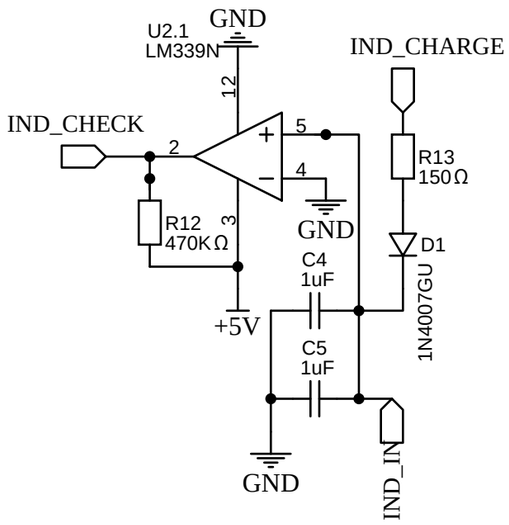

INDUCTOR SECTION

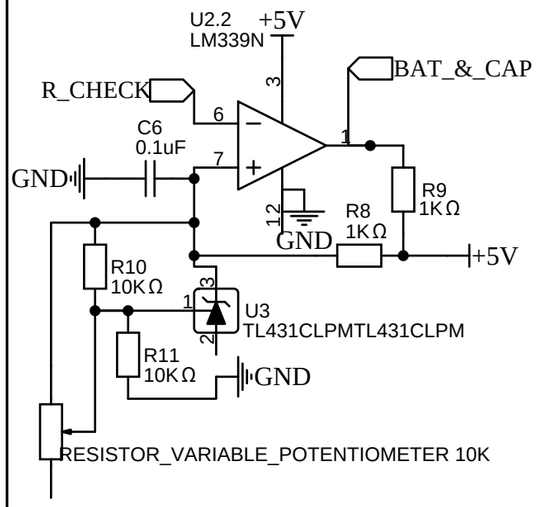

63.2% CHAEGE TIME CHECK

TITLE: LCR METER		REV: 1.0
EasyEDA	Company: HIT AEIE	Sheet: 1/1
	Date: 2022-04-07 Drawn By: RAJIB MANNA	