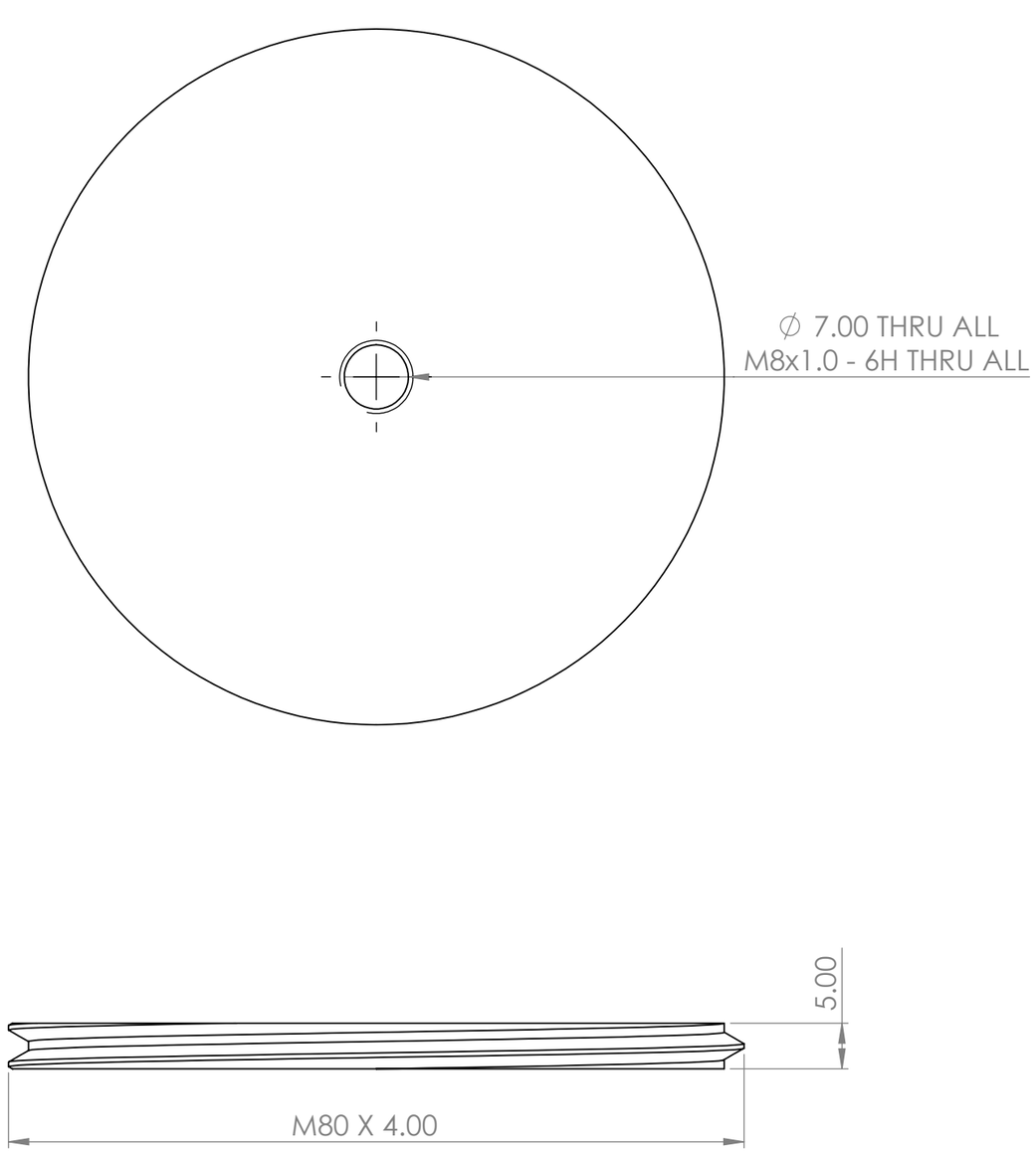

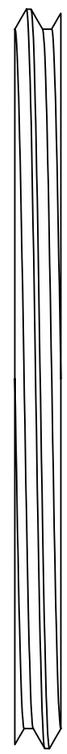

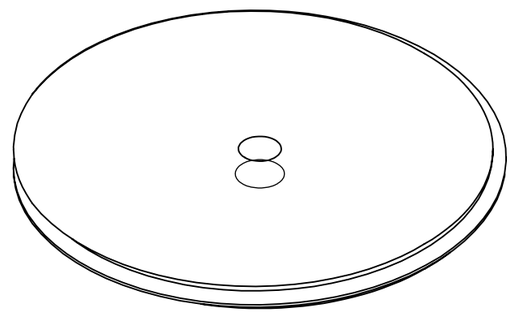

UNLESS OTHERWISE SPECIFIED: DIMENSIONS ARE IN MILLIMETERS SURFACE FINISH: TOLERANCES: LINEAR: ± 0.1 ANGULAR: ± 1 deg	FINISH: M10			DEBURR AND BREAK SHARP EDGES	DO NOT SCALE DRAWING	REVISION
	NAME	SIGNATURE	DATE		TITLE: Isofonics retainer bottom	
DRAWN	George Arthur Hall					
CHK'D	Russell Maguire					
APPV'D	Russell Maguire					
MFG						
Q.A				MATERIAL: 6061-T6 Aluminium	DWG NO. RET080-1002	A3
				WEIGHT:	SCALE:3:2	SHEET 1 OF 1

SOLIDWORKS Educational Product. For Instructional Use Only