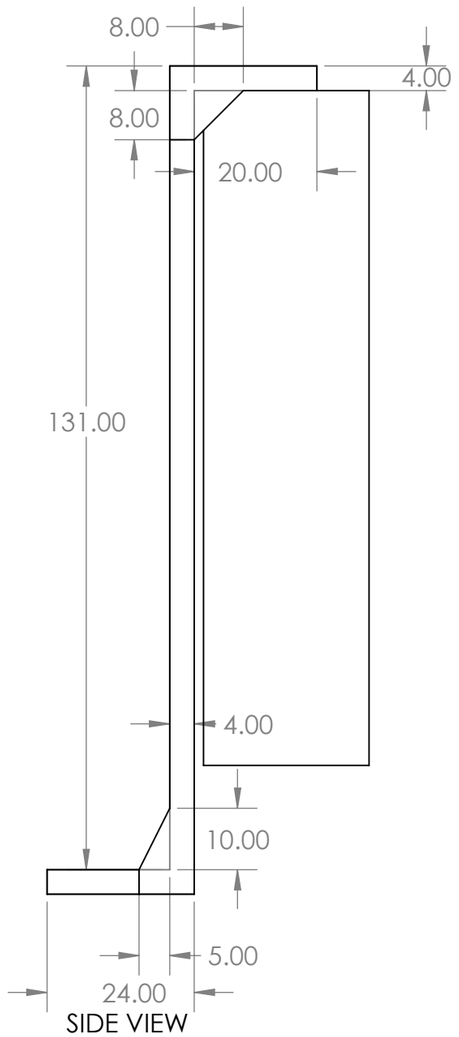

SIDE VIEW

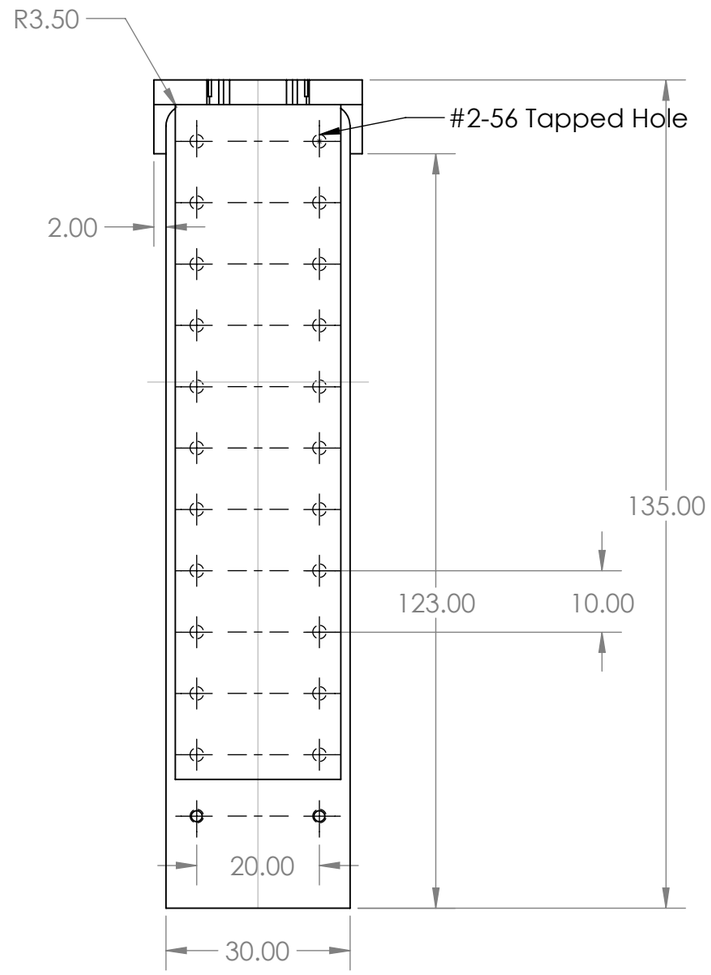

FRONT VIEW

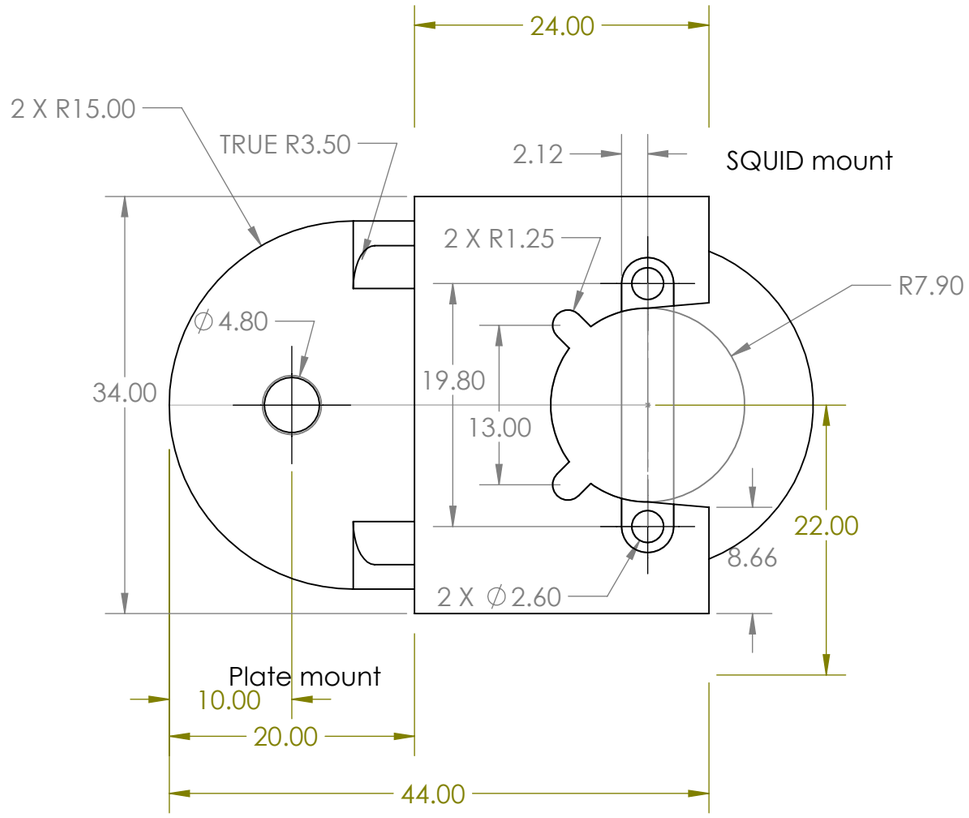

TOP VIEW

UNLESS OTHERWISE SPECIFIED: DIMENSIONS ARE IN MILLIMETERS SURFACE FINISH: Machine cut TOLERANCES: 5 mils / 0.13 mm LINEAR: ANGULAR: +/- 2 deg	FINISH:			DEBURR AND BREAK SHARP EDGES	DO NOT SCALE DRAWING	v1.4
	NAME	SIGNATURE	DATE		TITLE: Mounting bracket SC SQUID vertical	
DRAWN	RMDCarney		2 Nov 2023			
CHK'D						
APPV'D						
MFG						
Q.A				MATERIAL: Cu 101 (OFHC)	DWG NO. 1	A3
				WEIGHT:	SCALE:1:1	SHEET 1 OF 1