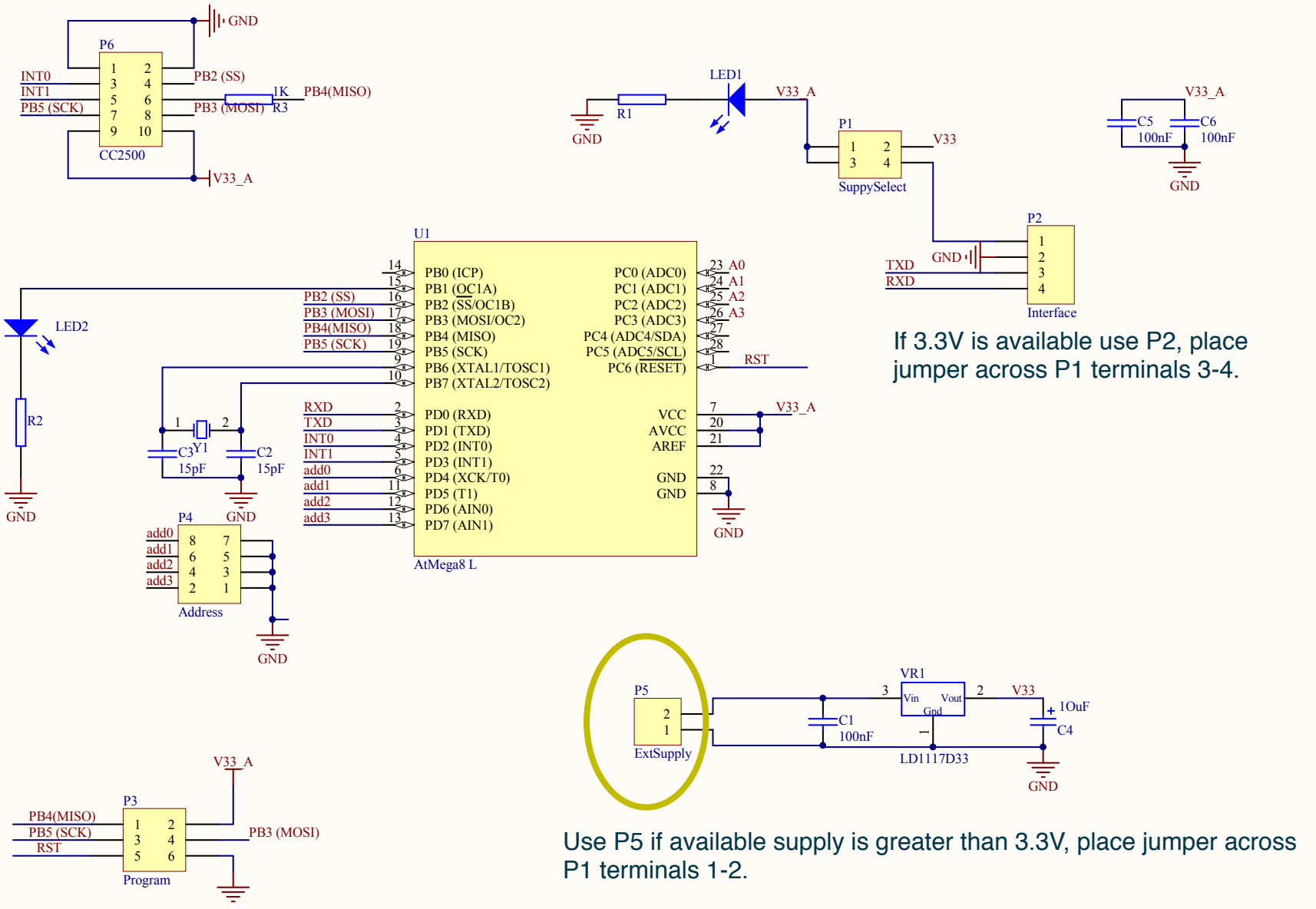

Title		
Size A	Number	Revision
Date: 8/5/2014		Sheet of
File: Z:\nitishpatel\..\main.SchDoc		Drawn By:

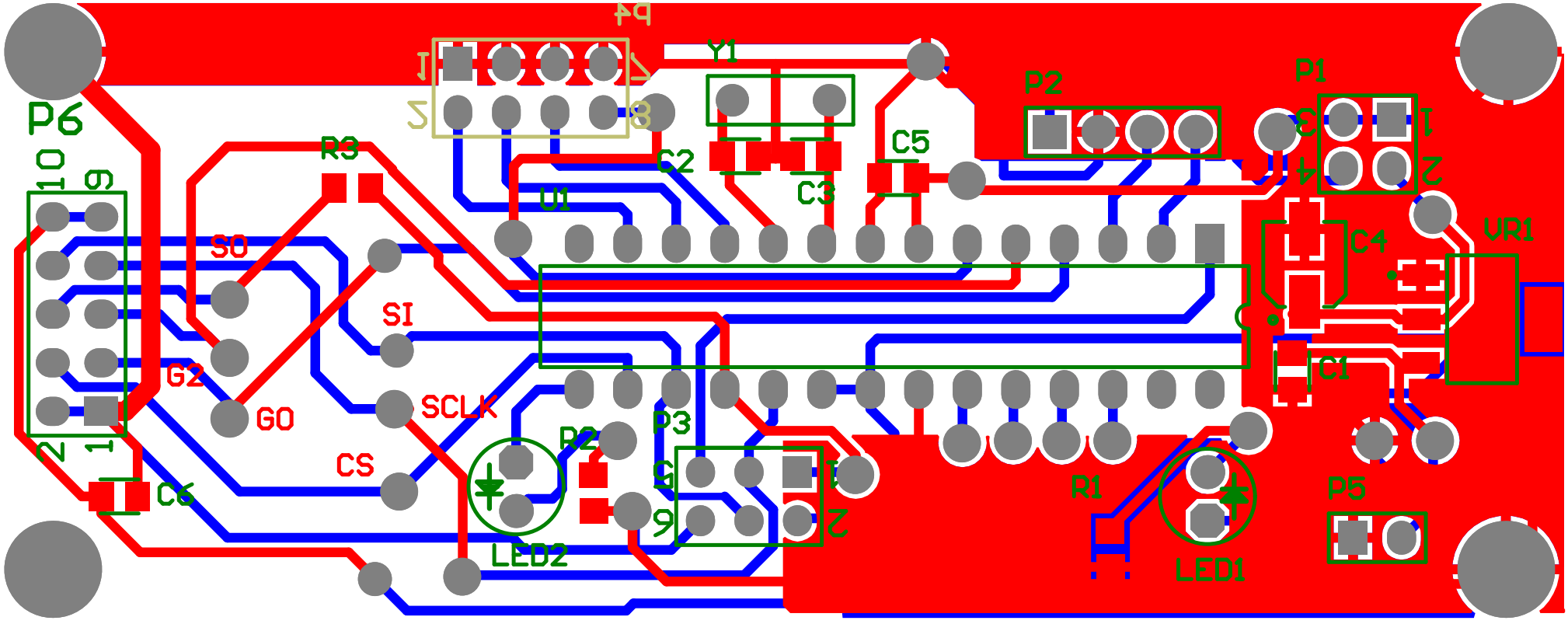
P6
10
9
2
1
C6
R3
SO
G2
G0
SI
SCLK
CS
U1
C2
Y1
C3
C5
P4
P2
P1
C4
VR1
C1
R2
P3
LED2
R1
LED1
P5