OP2042-V01

MFM384-C

Operating Instructions

96 x 96

SPECIFICATIONS

DISPLAY
Liquid crystal display with backlight 4 lines, 4 digits per line to show electrical parameters
5th line, 8 digits to show energy
Bar graph for current indication

LCD INDICATIONS
- I - Integration of energy
- PRG - Unit is in configuration menu
- ⇄ - Communication in progress
- MAX DMD - Maximum and Minimum Demand Power
- THD - For Total harmonic distortion
- IM - Import Energy
- EP - Export Energy

WIRING INPUT
3 Ø - 4 wire, 3 Ø - 3 wire, 2 Ø - 3 wire and 1 Ø - 2 wire system

RATED INPUT VOLTAGE
11 to 300V AC (L-N) ; 19 to 519V AC (L-L) ; Installation Category III (600V)

FREQUENCY RANGE
45-65 Hz

RATED INPUT CURRENT
Nominal 5A AC (Min-11mA, Max-6A)

BURDEN
0.5 VA@5A per phase

CT PRIMARY
1A / 5A to 10,000A (Programmable for any Value)
Note : 1A to 10,000A if CT secondary is 1 else CT primary is 5A to 10,000A

CT SECONDARY
1A or 5A (Programmable)

PT PRIMARY
100V to 500kV (Programmable for any value)

PT SECONDARY
100 to 500V AC (L-L)(Programmable for any value)

Display update time
1 sec. for all parameters

Display Scrolling
Automatic or Manual (Programmable)

POWER CONSUMPTION
Less than 8VA

ENVIRONMENTAL CONDITIONS
- Indoor use
- Altitude of up to 2000 meters
- Pollution degree II

Temperature : Operating : -10°C to 55°C
Storage: -20°C to 75°C
Humidity :Up to 85% non-condensing

PROTECTION CLASS : II
INSTALLATION CATEGORY : III
MOUNTING :Panel mounting
WEIGHT MFM384-C : 296gms
OUTPUT Pulse Output : Voltage range : External 24V DC max.

ORDER CODE INFORMATION

Product	Supply	Certification	
		CE	c UL us LISTED
MFM384-C-CE Class 1	85 to 300V AC, 50/60Hz (±5%)	■	--
MFM384-C-CE-CL05 Class 0.5S	85 to 300V AC, 50/60Hz (±5%)	■	--
MFM384-C-CU Class 1	100 to 240V AC, -15% +12%, 50/60Hz (±5%)	--	■

SERIAL COMMUNICATION

Interface standard and protocol	RS485 and MODBUS RTU
Communication address	1 to 255
Transmission mode	Half duplex
Data types	Float and Integer
Transmission distance	500m maximum
Transmission Speed	1200, 2400, 4800, 9600,19200 (in bps)
Parity	None, Odd, Even
Stop bits	1 or 2
Response time	100ms (max and independent of baud rate)

ACCURACY

Measurement	Accuracy	
	MFM384-C-CE MFM384-C-CU	MFM384-C-CE-CL05
Voltage V_{L-N}	±0.5% of F.S.	±0.5% of F.S.
Voltage V_{L-L}	±0.5% of F.S	±0.5% of F.S
Current	±0.5% of F.S	±0.5% of F.S
Frequency	±0.1% For L-N V>20V, For L-L V>35V	±0.1% For L-N V>20V, For L-L V>35V
Active Power	1%	±0.5%
Apparent power	1%	±0.5%
Reactive Power	1%	±1%
Power factor	±0.01	±0.005
Active energy	Class 1	Class 0.5S (IEC 62053-22)
Reactive energy	Class 1	Class 2 (IEC 62053-23)
Apparent energy	Class 1	Class 0.5S
MAX / MIN kW	1%	±0.5%
MAX / MIN kVAr	1%	±1%
MAX kVA	1%	±0.5%

RESOLUTION :

PT Ratio x CT Ratio	kWh / kVAh / kVArh	Pulse
<15	0.01K	0.01K
<150	0.1K	0.1K
<1500	1K	1K
<15000	0.01M	0.01M
<150000	0.1M	0.1M
≥150000	1M	0.1M

NOTE : 1) For Voltage, Current and Power, resolution is automatically adjusted.
2) For power factor, resolution is 0.001
3) I blinks after every 5 sec, if load is connected on any one of 3 phases.

SAFETY PRECAUTIONS

All safety related codifications, symbols and instructions that appear in this operating manual or on the equipment must be strictly followed to ensure the safety of the operating personnel as well as the Instrument.

If the equipment is not used in a manner specified by the manufacturer it might impair the protection provided by the equipment.
- Do not use the equipment if there is any mechanical damage.
- Ensure that the equipment is supplied with correct Voltage.

CAUTION :
1. Read complete instructions prior to installation and operation of the unit.
2. Risk of electric shock.
3. The equipment in its installed state must not come in close proximity to any heating sources, oils, steam, caustic vapors or other unwanted process by products.

WIRING GUIDELINES

WARNING :
1. To prevent the risk of electric shock, power supply to the equipment must be kept OFF while doing the wiring arrangement.
2. Wiring shall be done strictly according to the terminal layout. Confirm that all connections are correct.
3. Use lugged terminals.
4. To reduce electromagnetic interference use of wires with adequate ratings and twists of the same in equal size shall be made with shortest connections.
5. Layout of connecting cables shall be away from any internal EMI source.
6. Cable used for connection to power source, must have a cross section of 0.5mm2 to 2.5mm2 (20 to 14AWG ; 750C(min)). These wires shall have current carrying capacity of 6A.
7. Copper cable should be used (Stranded or Single core cable).
8. Before attempting work on device, ensure absence of voltages using appropriate voltage detection device.

INSTALLATION GUIDELINES

CAUTION :
1. This equipment, being built-in-type, normally becomes a part of main control panel and in such case the terminals do not remain accessible to the end user after installation and internal wiring.
2. Conductors must not come in contact with the internal circuitry of the equipment or else it may lead to a safety hazard that may in turn endanger life or cause electrical shock to the operator.
3. Circuit breaker or mains switch must be installed between power source and supply terminals to facilitate power 'ON' or ' OFF' function. However this switch or breaker must be installed in a convenient position normally accessible to the operator.
4. Before disconnecting the secondary of the external current transformer from the equipment, make sure that the current transformer is short circuited to avoid risk of electrical shock and injury.
5. The equipment shall not be installed in environmental conditions other than those mentioned in this manual.
6. The equipment does not have a built-in-type fuse. Installation of external fuse of rating 275V AC / 0.5Amp for electrical circuitry / battery is highly recommended.

MECHANICAL INSTALLATION

For installing the meter
1. Prepare the panel cutout with proper dimensions as shown below.
2. Push the meter into the panel cutout. Secure the meter in its place by fitting the clamp on the rear side. Fit clamps on both sides in diagonally opposite location for optimum fitting.
3. For proper sealing, tighten the screws evenly with required torque.

Terminal screw tightening torque :
0.68 N-m to 0.79 N-m (6.018 In-Lb to 6.992 In-Lb)
Screw clamp tightening torque : 0.1N-m (0.885 Lb-inch)

OUTLINE Dimensions (in mm)	PANEL CUTOUT Dimensions (in mm)

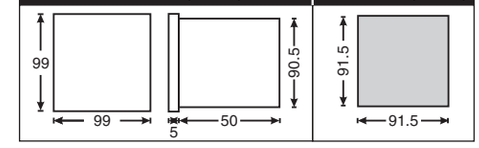

MAINTENANCE
1. The equipment should be cleaned regularly to avoid blockage of ventilating parts.
2. Clean the equipment with a clean dry or damp cloth. Do not use any cleaning agent other than water.

TERMINAL CONNECTIONS

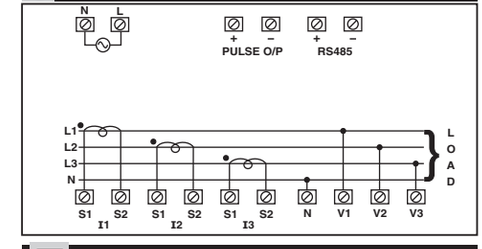

FRONT PANEL DESCRIPTION

ONLINE PAGE DESCRIPTION

There are 6 dedicated keys labelled as V, I, VAF, PF, P, E. Use these 6 keys to read meter parameters. Simply press these keys to read the parameters.

KEY PRESS	ONLINE PAGE DESCRIPTION
Press "V"	**The first screen** : Displays line to neutral Voltage of three phase and average line to neutral voltage. **The second screen** : Displays line to line voltage of three phase and average line to line voltage. **The third screen** : Displays total percentage harmonics of line to neutral voltage of three phase and average line to neutral voltage. **The fourth screen** : Displays total percentage harmonics of line to line voltage of three phase and average line to line voltage. **The fifth screen** : Press for 3 sec, Displays phase sequence indication. **Note :** 1) For 3 Ø 3 wire system, only the second, fourth and fifth screen will be available. 2) In 1 Ø 2 wire system only first, third and fifth screen will be available.
Press "I"	**The first screen** : Displays phase current of three phase and neutral current. **The second screen** : Displays phase maximum current demand of three phase and average current. **The third screen** : Displays total percentage harmonic of current of three phase and average phase current. **The fourth screen** : Press for 3 sec, Displays current connection indication page. **Note :** For 3 Ø 3 wire system only first, second and third screen will be available. Displays average current instead of neutral current.

KEY PRESS	ONLINE PAGE DESCRIPTION
Press "VAF"	**The first screen :** Displays voltage, current, power factor of first phase and frequency. **The second screen :** Displays voltage, current, power factor of second phase and frequency. **The third screen :** Displays voltage, current, power factor of third phase and frequency. **The fourth screen :** Displays average value of voltage, current and power factor of three phase and frequency. **Note :** 1) In 3 Ø 3 wire system voltage current power factor and freq. will be line to line. 2) In 1 Ø 2 wire system only first screen will be available.
Press "PF"	**The first screen :** Displays power factor of three phase and average power factor. **Note :** For 3 Ø 3 wire system, only average power factor will be available on this screen.
Press "P"	**The first screen :** Displays active power of three phase and total active power. **The second screen :** Displays reactive power of three phase and total reactive power. **The third screen :** Displays apparent power of three phase and total apparent power. **The fourth screen :** Displays active, reactive, apparent power and power factor of first phase. **The fifth screen :** Displays active, reactive, apparent power and power factor of second phase. **The sixth screen :** Displays active, reactive, apparent power and power factor of third phase. **The seventh screen :** Displays total active, reactive, apparent power and average power factor of three phase. **The eighth screen :** Displays maximum active power demand, reactive power demand and apparent power demand. **The ninth screen :** Displays minimum active power demand and reactive power demand. **Note :** 1) For 3 Ø 3 wire system only seventh, eighth and ninth screen will be available. 2) In 1 Ø 2 wire system only first, second, third, fourth, eighth and ninth screen will be available.
Press "E"	**The first Screen :** Displays import active energy of first phase. **The second screen :** Displays import active energy of second phase. **The third screen :** Displays import active energy of third phase. **The fourth screen :** Displays export active energy of first phase. **The fifth screen :** Displays export active energy of second phase. **The sixth screen :** Displays export active energy of third phase. **The seventh screen :** Displays total import active energy of three phase. **The eighth screen :** Displays total export active energy of three phase. **The ninth screen :** Displays total net active energy of three phase. **The tenth Screen :** Displays import reactive energy of first phase. **The eleventh screen :** Displays import reactive energy of second phase. **The twelfth screen :** Displays import reactive energy of third phase. **The thirteen screen :** Displays export reactive energy of first phase. **The fourteen screen :** Displays export reactive energy of second phase. **The fifteen screen :** Displays export reactive energy of third phase. **The sixteen screen :** Displays total import reactive energy of three phase. **The seventeen screen :** Displays total export reactive energy of three phase. **The eighteen screen :** Displays total net reactive energy of three phase. **The nineteen screen :** Displays apparent energy of first phase. **The twenty screen :** Displays apparent energy of second phase.

KEY PRESS	ONLINE PAGE DESCRIPTION
	The twenty first screen : Displays apparent energy of third phase. **The twenty second screen :** Displays total net apparent energy of three phase. **The twenty third screen :** Displays run hour. **The twenty fourth screen :** Displays Auxiliary Interrupts. **Note :** 1) In 3 Ø 3 wire system only ninth, eighteenth, twenty second, twenty third and twenty fourth screens will be available. 2) In 1 Ø 2 wire system first, fourth, seventh, eighth, ninth, tenth, thirteenth, sixteenth, seventeenth, eighteenth, nineteenth, twenty second, twenty third and twenty fourth screens will be available.

NETWORK SELECTION AND WIRING INPUT

Network selection in configuration mode	Wiring
3P4W	3P4W, 2P3W, 1P2W (P1/P2/P3)
3P3W	3P3W
Note : P1, P2 and P3 are Three Phase.	

AUTOMATIC / MANUAL MODE DESCRIPTION

Press E (↵) button for 3 seconds to toggle between Automatic and Manual mode.
Note : By default unit operates in manual mode.
In automatic mode online pages scroll automatically at the rate of 5 seconds per page.
In automatic mode when any key is pressed, unit temporarily switches to manual mode and the appropriate page is displayed, also if any key is not pressed for 5 sec, unit resumes automatic mode.

CONFIGURATION

There are 6 dedicated keys with symbols marked as ◄ , ► , ▼ , ▲ , ← , ↵ . use these 6 keys to enter into configuration menu / change setting.
Note : The settings should be done by a professional, after going through this users manual and after having understood the application situation.
For the configuration setting mode :

- Use ▲ + ▼ keys for 3 sec. to enter or exit from the configuration menu.
- Use ◄ or ► keys to move curser left or right by one digit each time.
- Use ▲ or ▼ keys for increasing or decreasing parameters value.
- Use ← key to go back to previous page.
- Use ↵ key to save the setting and move on to next Page.

Config page.	Function	Range or Selection	Factory Setting
	Password	0000 to 9998	1000
1	Change Password	No / Yes	No
1.1	New Password	0000 to 9998	1000
2	Network Selection	3P4W, 3P3W, 1P2W-P1, 1P2W-P2 and 1P2W-P3	3P4W
3	CT Secondary	1A or 5A	5
4	CT Primary	1A, 5A to 10,000A	5
5	PT Secondary	100V to 500V	350
6	PT primary	100V to 500kV	350
7	Slave Id	1 to 255	1
8	Baud Rate	300, 600, 1200, 2400, 4800, 9600 and 19200 (bps)	9600
9	Parity	None, Odd, Even	None
10	Stop Bit	1 or 2	1
11	Back Light	0 to 7200 sec.	0000
12	Demand interval method	Sliding / Fixed	Sliding
13	Demand interval duration	1 to 30	15
14	Demand interval length	1 to 30 min	1
15	Max Page Auto	1 to 21	21
16	Change Page Sequence	No / Yes	No
16.01	Page sequence 1	1 to 21	1
16.02	Page sequence 2	1 to 21	2
16.03	Page sequence 3	1 to 21	3
16.04	Page sequence 4	1 to 21	4
16.05	Page sequence 5	1 to 21	5
16.06	Page sequence 6	1 to 21	6
16.07	Page sequence 7	1 to 21	7
16.08	Page sequence 8	1 to 21	8
16.09	Page sequence 9	1 to 21	9
16.10	Page sequence 10	1 to 21	10
16.11	Page sequence 11	1 to 21	11
16.12	Page sequence 12	1 to 21	12
16.13	Page sequence 13	1 to 21	13
16.14	Page sequence 14	1 to 21	14
16.15	Page sequence 15	1 to 21	15
16.16	Page sequence 16	1 to 21	16
16.17	Page sequence 17	1 to 21	17
16.18	Page sequence 18	1 to 21	18
16.19	Page sequence 19	1 to 21	19
16.20	Page sequence 20	1 to 21	20
16.21	Page sequence 21	1 to 21	21
17	Pulse weight (kWh)	0.01 to 99.99	0.01
18	Pulse duration (Sec)	0.1 to 2.0	0.1
19	Factory default	No / Yes	No
20	Reset energy and MAX demand	No / Yes	No
• 20.1	Password	0001 to 9999	1001
20.01	Reset active energy	No / Yes	No
20.02	Reset reactive energy	No / Yes	No
20.03	Reset apparent energy	No / Yes	No
20.04	Reset Current MAX DMD	No / Yes	No
20.05	Reset active power MAX DMD	No / Yes	No
20.06	Reset active power MIN DMD	No / Yes	No
20.07	Reset Reactive power MAX DMD	No / Yes	No
20.08	Reset Reactive power MIN DMD	No / Yes	No
20.09	Reset apparent power MAX DMD	No / Yes	No
21	Reset Run Hour	No / Yes	No
22	Reset Auxiliary Interrupt	No / Yes	No

- For resetting energy parameters user will be prompted for the password. If correct password is entered, user will be able to reset all energy parameters. This password will be greater than the configuration password by 1.

SERIAL NUMBER DESCRIPTION

Press PF (▲) key for 10sec. to display 8 digit serial number only for 10sec. at 5th line of display

EXAMPLE TO READ DATA FROM INPUT REGISTER

Data format: Big Endian (Default format)
If Total Active Energy = 1234.12kWh
Start Address : 30090, No. Of register : 02
Hexadecimal Equivalent of 1234.12 is 0x449A43D7

Data stored at 30090 is LSB : A 44 B 9A
Data Stored at 30091 is MSB : C 43 D D7

Data Format to be followed is A-B-C-D

Data format: Mid Little Endian
If Total Active Energy = 1234.12kWh
Start Address : 30090, No. Of register : 02
Hexadecimal Equivalent of 1234.12 is 0x449A43D7

Data stored at 30090 is LSB : C 43 D D7
Data Stored at 30091 is MSB : A 44 B 9A

Data Format to be followed is C-D-A-B

POWER FACTOR SIGN CONVENTION

Power Factor sign convention (PF sign) can be positive or negative, and is defined by the conventions used by the IEC standard.
PF sign correlates with the direction of real power (kW) flow.

- Quadrant 1 and 4: Positive real power (+kW). The PF sign is positive(+).
- Quadrant 2 and 3: Negative real power (-kW). The PF sign is negative(-).

APPLICATION OF PULSE OUTPUT

● **PROCESS INTEGRATION**

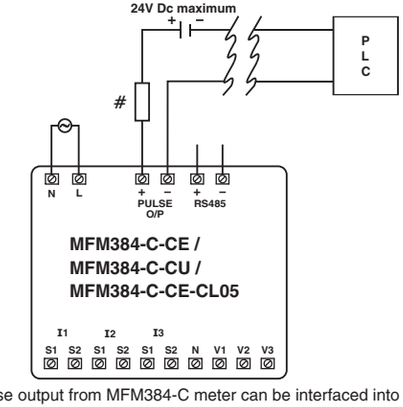

Pulse output from MFM384-C meter can be interfaced into a process through a PLC for on line control of energy content in the process.
If the PLC has a self excited digital input, external DC supply is not needed.
The kWh pulse is also used to derive average kWh information at the PLC.

MODBUS REGISTER ADDRESSES LIST

Readable Parameters : [Length (Register) : 2 ; Data Structure : Float]

Address	Hex Address	Parameter
30000	0x00	Voltage V1N
30002	0x02	Voltaage V2N
30004	0x04	Voltage V3N
30006	0x06	Average Voltage LN
30008	0x08	Voltage V12
30010	0x0A	Voltage V23
30012	0x0C	Voltage V31
30014	0x0E	Average Voltage LL
30016	0x10	Current I1
30018	0x12	Current I2
30020	0x14	Current I3
30022	0x16	Average Current
30024	0x18	kW1
30026	0x1A	kW2
30028	0x1C	kW3
30030	0x1E	kVA1
30032	0x20	kVA2
30034	0x22	kVA3
30036	0x24	kVAr1
30038	0x26	kVAr2
30040	0x28	kVAr3
30042	0x2A	Total KW
30044	0x2C	Total KVA
30046	0x2E	Total KVAr
30048	0x30	PF1
30050	0x32	PF2
30052	0x34	PF3
30054	0x36	Average PF
30056	0x38	Frequency
30058	0x3A	Total net kWh
30060	0x3C	Total net kVAh
30062	0x3E	Total net kVArh
30064	0x40	kW Active Power Max DMD
30066	0x42	kW Active Power Min DMD
30068	0x44	kVAr Reactive Power Max DMD
30070	0x46	kVAr Reactive Power Min DMD
30072	0x48	kVA Apparent Power Max DMD
30080	0x50	Auxiliary Interrupt
30082	0x52	Run hour
30084	0x54	kWh1 (Imp)
30086	0x56	kWh2 (Imp)
30088	0x58	kWh3 (Imp)
30090	0x5A	kWh1 (Exp)
30092	0x5C	kWh2 (Exp)
30094	0x5E	kWh3 (Exp)
30096	0x60	Total kWh (Imp)
30098	0x62	Total kWh (Exp)
30100	0x64	kVArh1 (Imp)

Address	Hex Address	Parameter
30102	0x66	kVArh2 (Imp)
30104	0x68	kVArh3 (Imp)
30106	0x6A	kVArh1 (Exp)
30108	0x6C	kVArh2 (Exp)
30110	0x6E	kVArh3 (Exp)
30112	0x70	Total kVArh (Imp)
30114	0x72	Total kVArh (Exp)
30116	0x74	kVAh1
30118	0x76	kVAh2
30120	0x78	kVAh3
30122	0x7A	Neutral Current
30124	0x7C	THD of 1st Phase Voltage
30126	0x7E	THD of 2nd Phase Voltage
30128	0x80	THD of 3rd Phase Voltage
30130	0x82	THD of Voltage V12
30132	0x84	THD of Voltage V23
30134	0x86	THD of Voltage V31
30136	0x88	THD of Current I1
30138	0x8A	THD of Current I2
30140	0x8C	THD of Current I3
30684	0x2AC	Serial no. (Data Structure : Hex)
30692	0x2B4	MAX I1 Demand
30694	0x2B6	MAX I2 Demand
30696	0x2B8	MAX I3 Demand
30698	0x2BA	MAX Avg. I Demand
30700	0x2BC	Phase Sequence Indication (0-Invalid, 1-Anticlockwise, 2-OK clockwise)
30702	0x2BE	Existing KW Active Power MAX DMD
30704	0x2C0	Existing KW Active Power MIN DMD
30706	0x2C2	Existing KVAr Reactive Power MAX DMD
30708	0x2C4	Existing KVAr Reactive Power MIN DMD
30710	0x2C6	Existing KVA Apparent Power MAX DMD
30712	0x2C8	Existing MAX I1 Demand
30714	0x2CA	Existing MAX I2 Demand
30716	0x2CC	Existing MAX I3 Demand
30718	0x2CE	Existing MAX Avg. I Demand

Formula to find address of individual Harmonic

Constant Parameter	Meaning
0	Voltage V1N
1	Voltage V2N
2	Voltage V3N
3	Voltage V12
4	Voltage V23
5	Voltage V31
6	Current I1
7	Current I2
8	Current I3

{143 + [(Harmonic no-2) x 2] + 60 x Constant Parameter}

For Example,
To find the 14th Harmonic address of Voltage V31 following formula can be used :

Formula with the parameter :
{143 + [(Harmonic no-2) x 2] + 60 x C P}
Eg. {143 + [(14-2) x 2] + 60 x 5} = 467

So, Check the 14th Harmonic of Voltage V31 at 467 address.

Readable / writable parameters : [Data Structure : Integer]

Address	Hex Address	Parameter	Range		Length (Register)
40000	0x00	Password	Min value : 0	Max value : 9998	1
40001	0x01	N/W Selection	Value : 0	Meaning : 3P4W	1
			Value : 1	Meaning : 3P3W	1
			Value : 2	Meaning : 1P2W-P1	1
			Value : 3	Meaning : 1P2W-P2	1
			Value : 4	Meaning : 1P2W-P3	1
40002	0x02	CT Secondary	Min value : 1	Max value : 5	1
40003	0x03	CT primary (CT Secondary=5)	Min value : 5	Max value : 10000	1
		CT primary (CT Secondary=1)	Min value : 1	Max value : 10000	
40004	0x04	PT Secondary	Min value : 100	Max value : 500	1
40005	0x05	PT primary	Min value : 100	Max value : 500kV	2
40007	0x07	Slave id	Min value : 1	Max value : 255	1
40008	0x08	Baud rate	Value : 0x0000	Meaning : 300	1
			Value : 0x0001	Meaning : 600	
			Value : 0x0002	Meaning : 1200	
			Value : 0x0003	Meaning : 2400	
			Value : 0x0004	Meaning : 4800	
			Value : 0x0005	Meaning : 9600	
			Value : 0x0006	Meaning : 19200	
40009	0x09	Parity	Value : 0x0000	Meaning : None	1
			Value : 0x0001	Meaning : Odd	
			Value : 0x0002	Meaning : Even	
40010	0x0A	Stop bit	Value : 0x0000	Meaning : 1	1
			Value : 0x0001	Meaning : 2	1
40011	0x0B	Backlight OFF	Min Value : 0	Max Value : 7200	1
40012	0x0C	Factory Default	1	Meaning : Set to factory setting range	1
40013	0x0D	Reset Active Energy	1	Meaning : Reset Total Active Energy	1
40014	0x0E	Reset Apparent Energy	1	Meaning : Reset Total Apparent Energy	1
40015	0x0F	Reset Reactive Energy	1	Meaning : Reset Total Reactive Energy	1
40016	0x10	Auto Mode Pages	Min Value : 1	Max Value : 21	1
40017	0x11	Page Address Sequence	1-21	Meaning : 1-First Page ; 21-Last Page	1
40018	0x12	Page Address Sequence	1-21	Meaning : 1-First Page ; 21-Last Page	1
40019	0x13	Page Address Sequence	1-21	Meaning : 1-First Page ; 21-Last Page	1
40020	0x14	Page Address Sequence	1-21	Meaning : 1-First Page ; 21-Last Page	1
40021	0x15	Page Address Sequence	1-21	Meaning : 1-First Page ; 21-Last Page	1
40022	0x16	Page Address Sequence	1-21	Meaning : 1-First Page ; 21-Last Page	1
40023	0x17	Page Address Sequence	1-21	Meaning : 1-First Page ; 21-Last Page	1
40024	0x18	Page Address Sequence	1-21	Meaning : 1-First Page ; 21-Last Page	1
40025	0x19	Page Address Sequence	1-21	Meaning : 1-First Page ; 21-Last Page	1
40026	0x1A	Page Address Sequence	1-21	Meaning : 1-First Page ; 21-Last Page	1
40027	0x1B	Page Address Sequence	1-21	Meaning : 1-First Page ; 21-Last Page	1
40028	0x1C	Page Address Sequence	1-21	Meaning : 1-First Page ; 21-Last Page	1
40029	0x1D	Page Address Sequence	1-21	Meaning : 1-First Page ; 21-Last Page	1
40030	0x1E	Page Address Sequence	1-21	Meaning : 1-First Page ; 21-Last Page	1
40031	0x1F	Page Address Sequence	1-21	Meaning : 1-First Page ; 21-Last Page	1
40032	0x20	Page Address Sequence	1-21	Meaning : 1-First Page ; 21-Last Page	1
40033	0x21	Page Address Sequence	1-21	Meaning : 1-First Page ; 21-Last Page	1
40034	0x22	Demand Interval Method	Value : 0x0000	Meaning : Sliding	1
			Value : 0x0001	Meaning : Fixed	
40035	0x23	Demand Interval Duration	Min Value : 1	Max Value : 30	1
40036	0x24	Demand Interval Length	Min Value : 1	Max Value : 30	1

MODBUS REGISTER ADDRESSES LIST

Readable / writable parameters : [Data Structure : Integer] MODBUS register addresses list continued…

Address	Hex Address	Parameter		Range	Length (Register)
40037	0x25	Reset Active Power Max DMD	Value : 1	Meaning : Reset Max Active power	1
40038	0x26	Reset Active Power Min DMD	Value : 1	Meaning : Reset Min Active power	1
40039	0x27	Reset Reactive Power Max DMD	Value : 1	Meaning : Reset Max Reactive power	1
40041	0x29	Reset Apparent Power Max DMD	Value : 1	Meaning : Reset Max Apparent Power	1
40042	0x2A	Reset Run Hour	Value : 1	Meaning : Reset Run Hour	1
40043	0x2B	Reset Auxiliary Interrupt	Value : 1	Meaning : Reset Auxiliary Interrupt	1
40044	0x2C	Reset Reactive Power Min DMD	Value : 1	Meaning : Reset Min Reactive power	1
40054	0x36	Page Address Sequence	1-21	1-First Page ; 21-Last Page	1
40055	0x37	Page Address Sequence	1-21	1-First Page ; 21-Last Page	1
40057	0x39	Pulse Duration	Min Value : 0.1(sec)	Max Value : 2.0(sec)	1
40058	0x3A	Pulse Weight	Min Value : 0.01	Max Value : 99.99	1
40059	0x3B	Page Address Sequence	1-21	1-First Page ; 21-Last Page	1
40060	0x3C	Page Address Sequence	1-21	1-First Page ; 21-Last Page	1
40064	0x40	Reset Max Current	Value : 1	Meaning : Reset Max Current	1
40070	0x46	Change Endianness	Value :0 or 1	Meaning : 0: Mid Little Endian (CDAB) 1: Big Endian (ABCD) Default setting :Big Endian	1

3 PHASE 4-WIRE (COMMONLY USED)

3 Ø - 4 WIRE, 3 CT'S

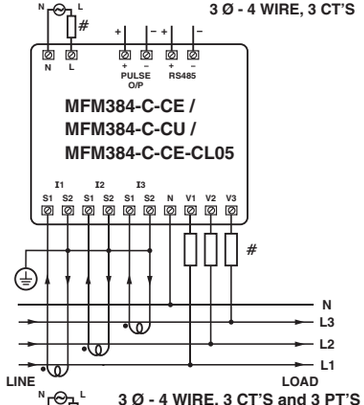

3 Ø - 4 WIRE, 3 CT'S and 3 PT'S

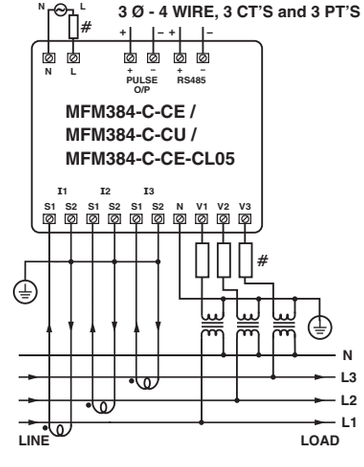

3 PHASE 3-WIRE

3 Ø - 3 WIRE, 2 CT'S

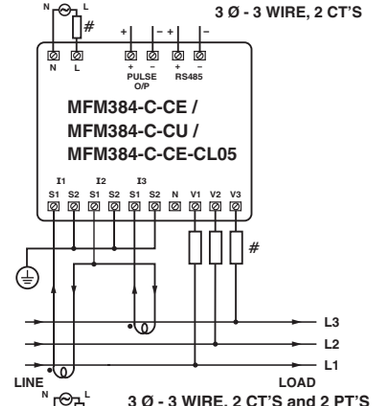

3 Ø - 3 WIRE, 2 CT'S and 2 PT'S

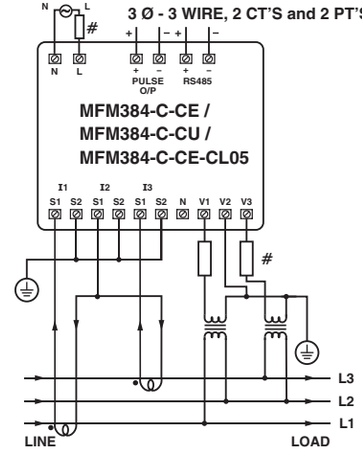

TYPICAL WIRING DIAGRAM

2 PHASE - 3 WIRE

2 Ø - 3 WIRE, 2 CT'S

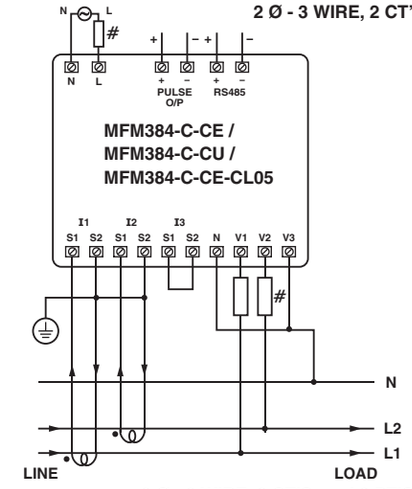

2 Ø - 3 WIRE, 2 CT'S and 2 PT'S

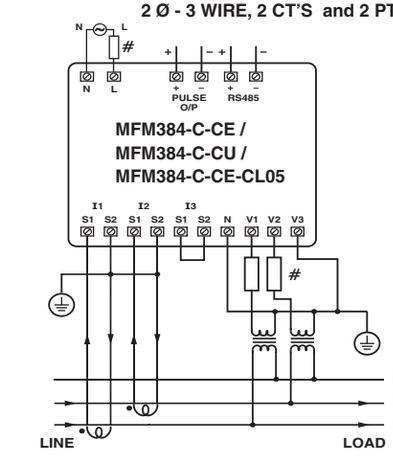

1 PHASE - 2 WIRE

1 Ø - 2 WIRE, 1 CT

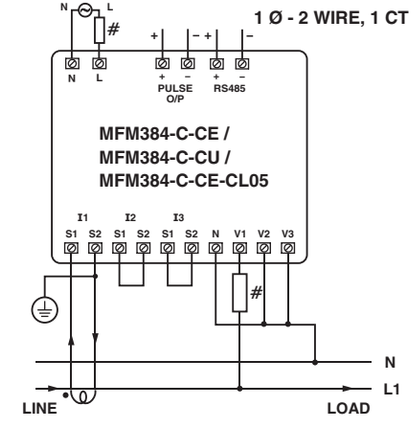

CONNECTION DIAGRAM FOR COMMUNICATION

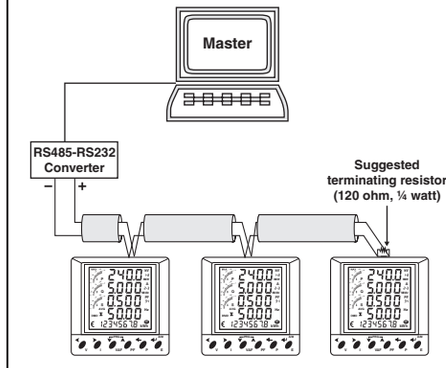

Contact sales for PC based monitoring software to communicate with the meters.

All fuse types : 0.5A class CC UL type
0.5A fast acting 600V

● ENERGY CONTROLLER

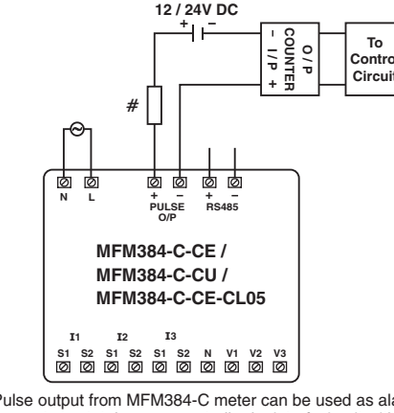

Pulse output from MFM384-C meter can be used as alarm generator or total energy controller by interfacing it with Pre-settable counter and control circuits (Contactors, Relay, Trip Circuit).

The counter is loaded with the maximum energy consumption. When count reaches setpoint it provides output to control circuit to take appropriate action.

All fuse types : 0.5A class CC UL type
0.5A fast acting 600V

(Specifications are subject to change, since development is a continuous process.)

Selec Controls Pvt. Ltd., India

Factory Address :
EL-27/1, Electronic Zone, TTC Industrial Area, MIDC, Mahape, Navi Mumbai - 400 710, INDIA.
Tel. No. : +91-22-41 418 419/430 I Fax No. : +91-22-28471733
Toll free : 1800 227 353 (BSNL/MTNL Subscribers only)
Website : www.selec.com I Email : sales@selec.com