Understanding Lifetimes

Rnic / H.-S. Zheng

May 25, 2019

Outline

Lifetimes Concepts

Phases of the NLL

Outline

- Lifetimes Concepts
  - Where are the lifetimes from
  - What is the lifetimes
- Phases of the NLL

Lifetimes

```
{
    let r;                      // ---------+-- 'a
                                //          |
    {                           //          |
        let x = 5;              // -+-- 'b  |
        r = &x;                 //  |       |
    }                           // -+       |
                                //          |
    println!("r: {}", r);       //          |
}                               // ---------+
```

```rust
{
    let r;

    {
        let x = 5;

        r = &x;

    }


    println!("{}", r);

}
```

```
{
    let r;

    {
        let x = 5;

        r = &x
        ^^^^^^ borrowed value does not live long enough
    }
    - `x` dropped here while still borrowed

    println!("{}", r);
                    - borrow later used here
}
```

Rust 2018

```
{
    let r;

    {
        let x = 5;

        r = &x
        ^^^^^^ borrowed value does not live long enough
    }
    - `x` dropped here while still borrowed

    println!("{}", r);

}
- borrowed value needs to live until here
```

Rust 2015

```
{
    let r;

    {
        let x = 5;

        r = &x;

        println!("{}", r);

    }
}
```

move to

```
{
    let r;

    {
        let x = 5;

        r = &x;

        println!("{}", r);

    }
}
```

move to

Rust 2018 

Rust 2015 

```
{
    let r;

    {
        let x = 5;

        r = &x
        ^^^^^^ borrowed value does not live long enough
        println!("{}", r);

    }
    - `x` dropped here while still borrowed

}
- borrowed value needs to live until here
```

Where are the Lifetimes from?

Where are the Lifetimes from?

Borrow

Where are the Lifetimes from?

Borrow

```
let foo = &bar;
```

Where are the Lifetimes from?

Borrow

```
let foo:&'foo T = &'bar bar;
```

Where are the Lifetimes from?

Borrow

```
let foo:&'foo T = &'bar bar;
```

Where are the Lifetimes from?

Borrow

```
let foo:&'foo T;

foo = &'bar bar;
```

Where are the Lifetimes from?

Borrow

```
let foo:&'foo T;

foo = &'bar bar;
```

A Borrow will generate a reference,
and this reference will be tagged with a Lifetimes

Subtyping

- **Notation** : `'a : 'b`
- **Meaning** : Lifetimes `'a` is outlives Lifetimes `'b`

Subtyping

- **Notation** : `'a : 'b`
- **Meaning** : Lifetimes `'a` is outlives Lifetimes `'b`

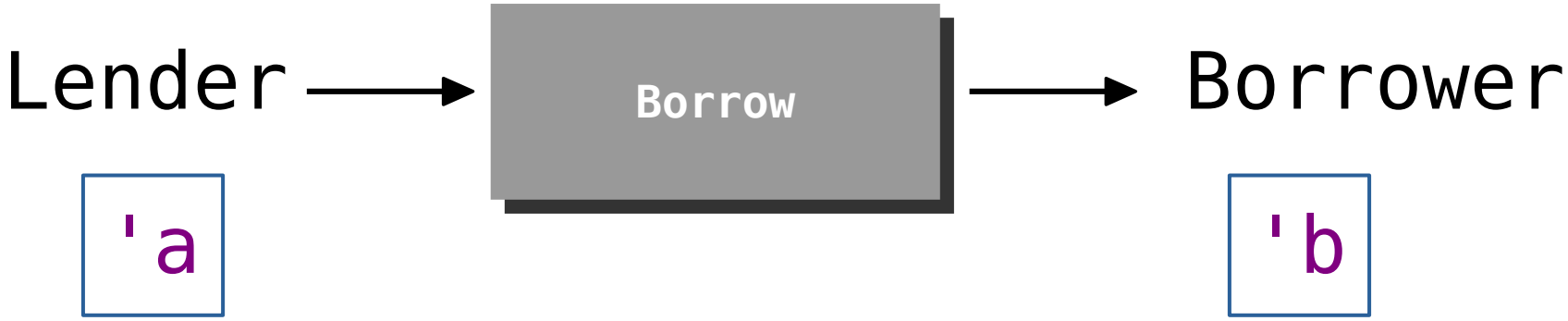

Subtyping

- **Notation** : `'a : 'b`

- **Meaning** : Lifetimes `'a` is outlives Lifetimes `'b`

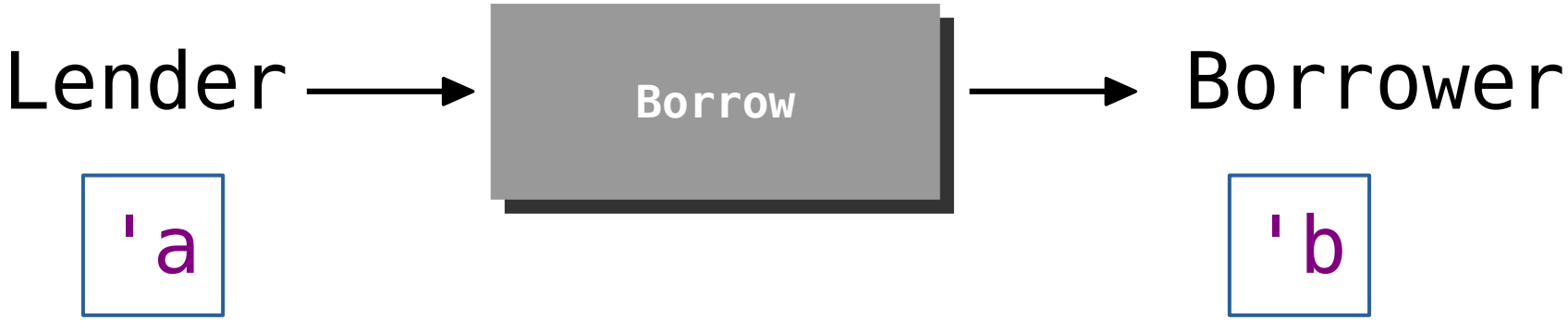

- **Example** :

```
let p: &'p T = &'foo foo;
```

Then we say: `'foo : 'p`

What is Lifetimes ?

- Definition:

What is Lifetimes ?

- **Definition**: set of points on CFG (control flow graph)

What is Lifetimes ?

- **Definition**: set of points on CFG (control flow graph)

```
let foo: T = ...;
let bar: T = ...;

let mut p = &foo;

if condition {

    print(*p);

    p = &bar;

}

print(*p);
```

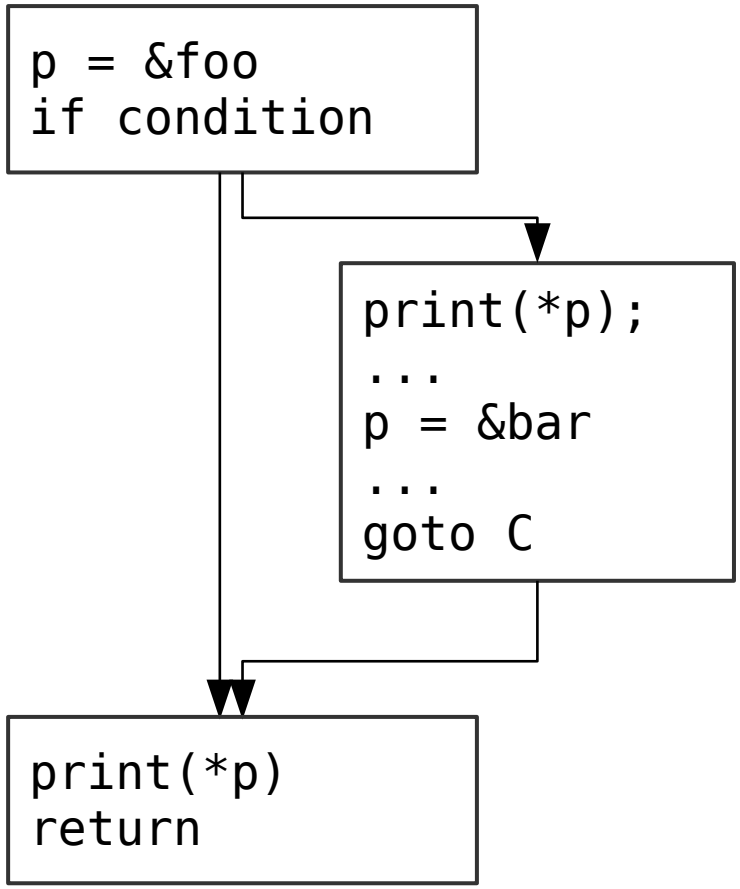

What is Lifetimes ?

- **Definition**: set of points on CFG (control flow graph)

```
let foo: T = ...;
let bar: T = ...;

let mut p = &'foo foo;

if condition {

    print(*p);

    p = &bar;

}

print(*p);
```

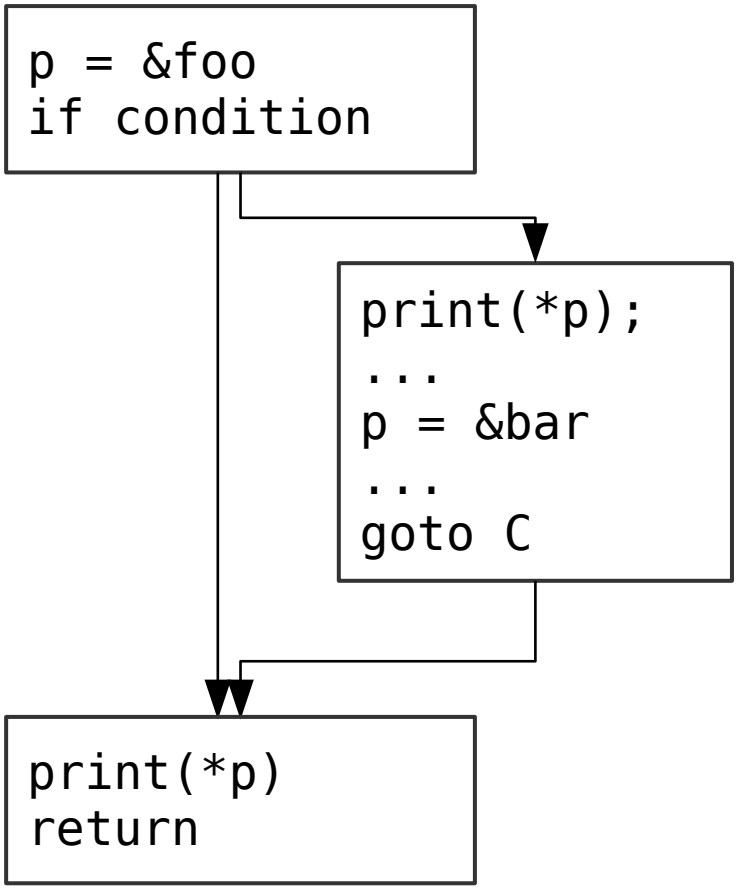

What is Lifetimes ?

- **Definition**: set of points on CFG (control flow graph)

```
let foo: T = ...;
let bar: T = ...;

let mut p = &'foo foo;

if condition {

    print(*p);

    p = &bar;

}

print(*p);
```

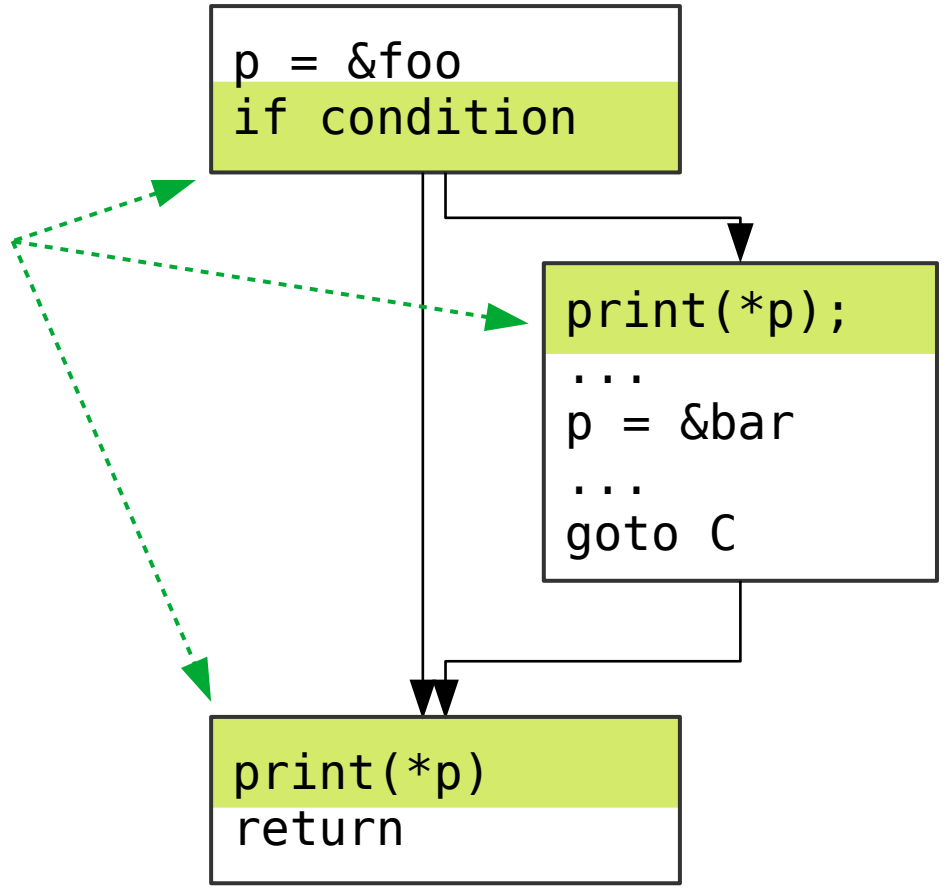

NLL

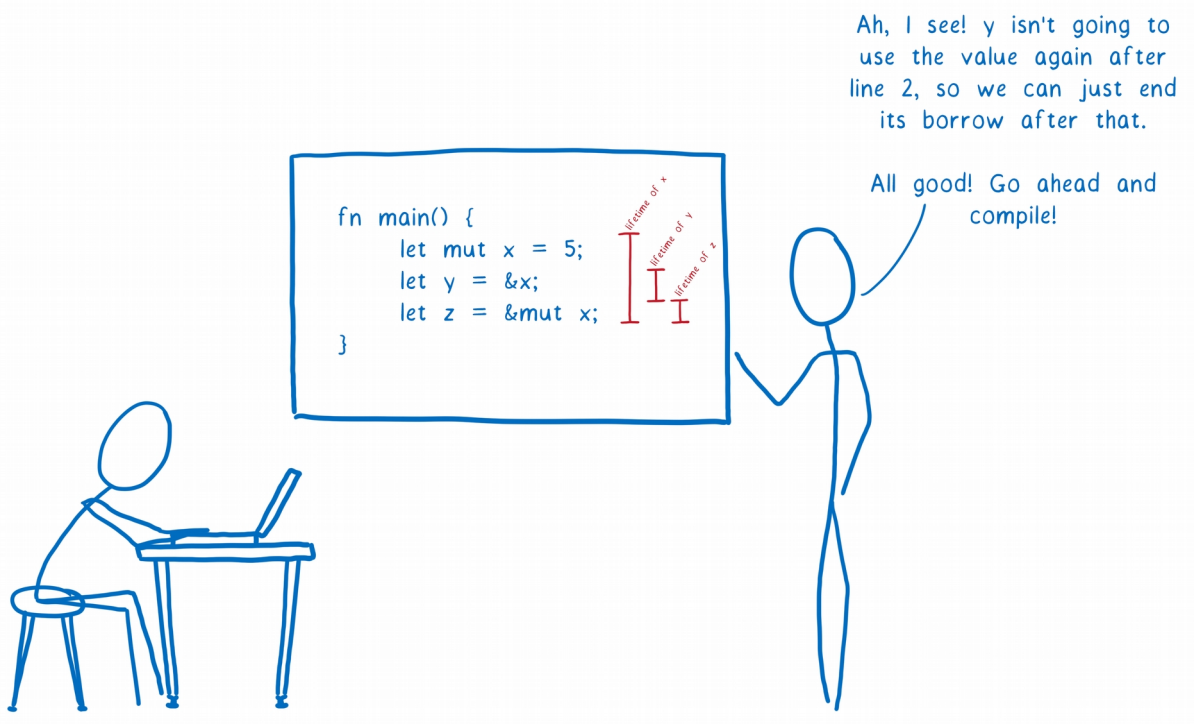
Ah, I see! y isn't going to use the value again after line 2, so we can just end its borrow after that.
All good! Go ahead and compile!
fn main() {
let mut x = 5;
let y = &x;
let z = &mut x;
}
lifetime of x
lifetime of y
lifetime of z

```rust
let mut s = "hello".to_string();

let mut c = || s += " world";

c();

println!("{}", s);
```

2015

```
let mut s = "hello".to_string();

let mut c = || s += " world";

c();

println!("{}", s);
```

Borrow as **mut**

Borrow as **immut**

```rust
fn process_or_default(map: &mut HashMap<usize, String>,
                      key: usize)
{
    match map.get_mut(&key) {

        Some(value) => {
            process(value);
            return;
        }

        None => {
            map.insert(key, V::default());
        }

    }
}
```

2015

```
fn process_or_default(map: &mut HashMap<usize, String>,
                      key: usize)
{
    match map.get_mut(&key) {

        Some(value) => {
            process(value);
            return;
        }

        None => {
            map.insert(key, V::default());
        }

    }
}
```

Borrow as **mut**

Borrow as **mut**

2015

```
fn process_or_default(map: &mut HashMap<usize, String>,
                      key: usize)
{
    match map.get_mut(&key) {

        Some(value) => {
            process(value);
            return;
        }

        None => {
            map.insert(key, V::default());
        }

    }
}
```

Borrow as **mut**

Borrow as **mut**

Liveness

- Meaning :

a variable v is live at point p if and only if there exists a path in CFG from p to a use of v along which v is not redefined.

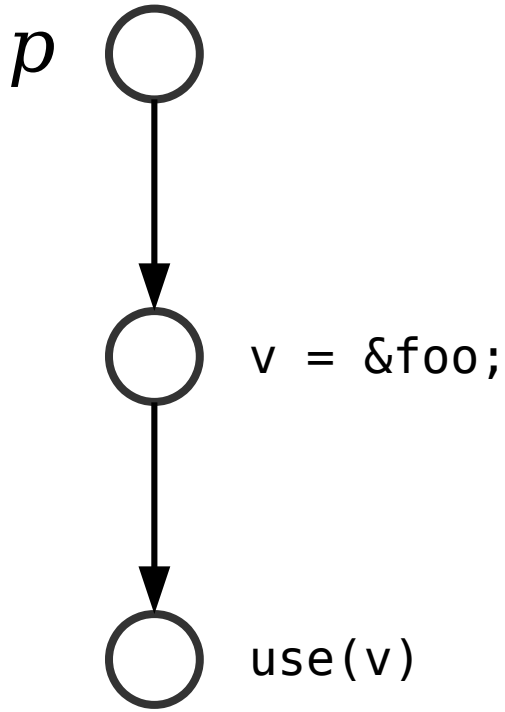
p
v = &foo;
use(v)

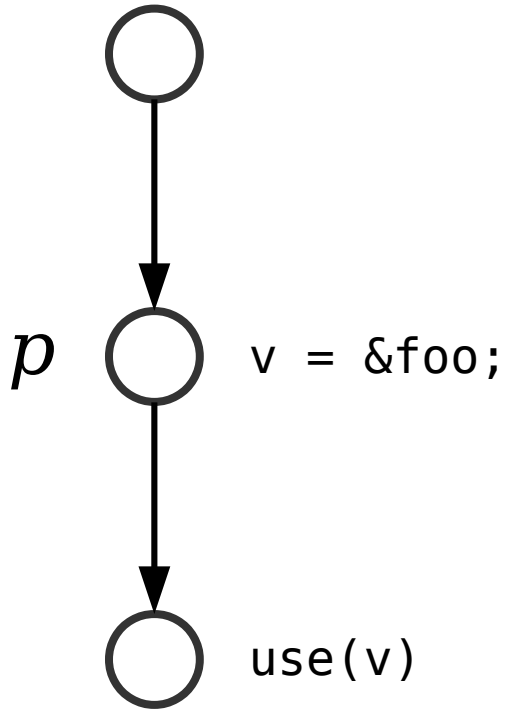
p
v = &foo;
use(v)

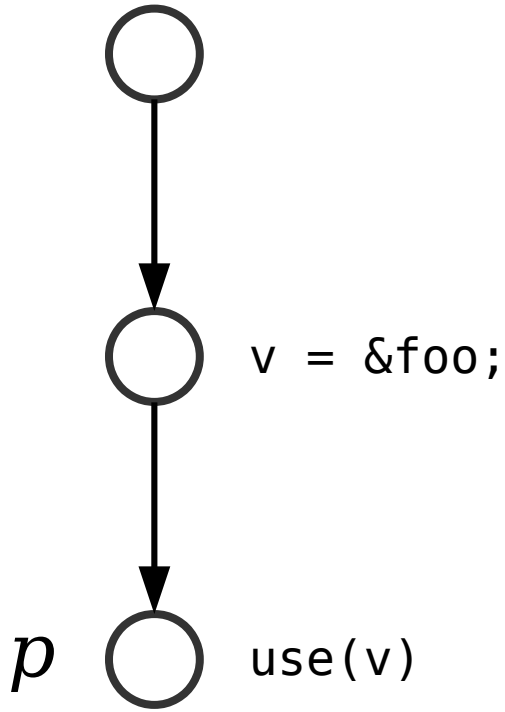
v = &foo;
p
use(v)

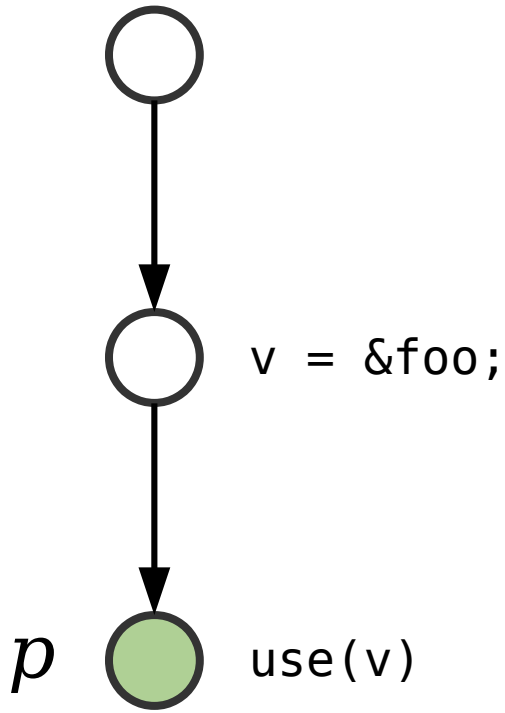
v = &foo;
p
use(v)

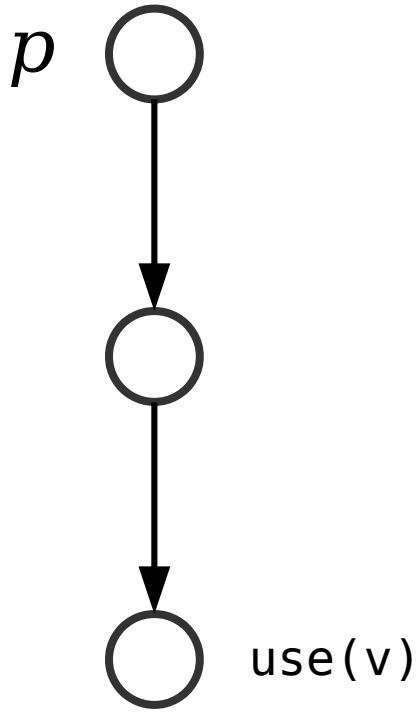
p
use(v)

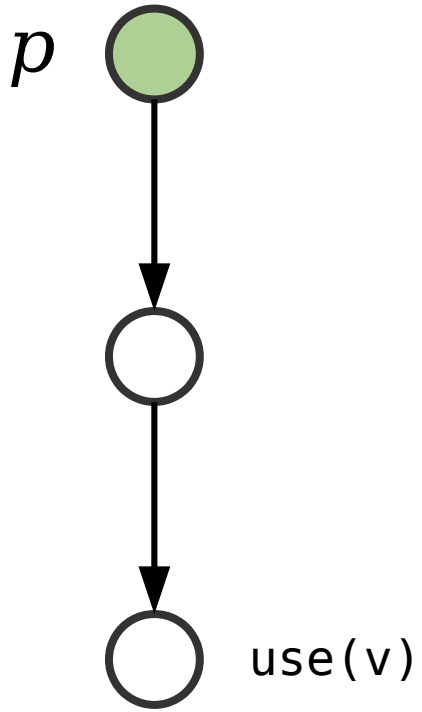
p
use(v)

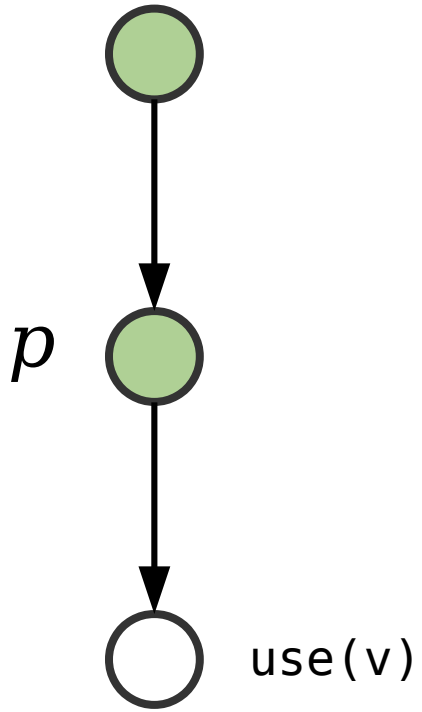
p
use(v)

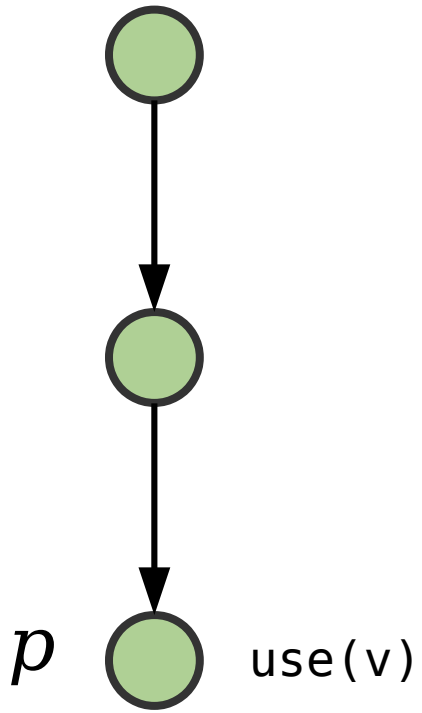
p
use(v)

Location-aware Subtyping

- **Notation** : `('a : 'b) @ P`
- **Meaning** : Lifetimes `'a` must include all points in `'b` that are reachable from location `P`

```
('a : 'b) @ P
```

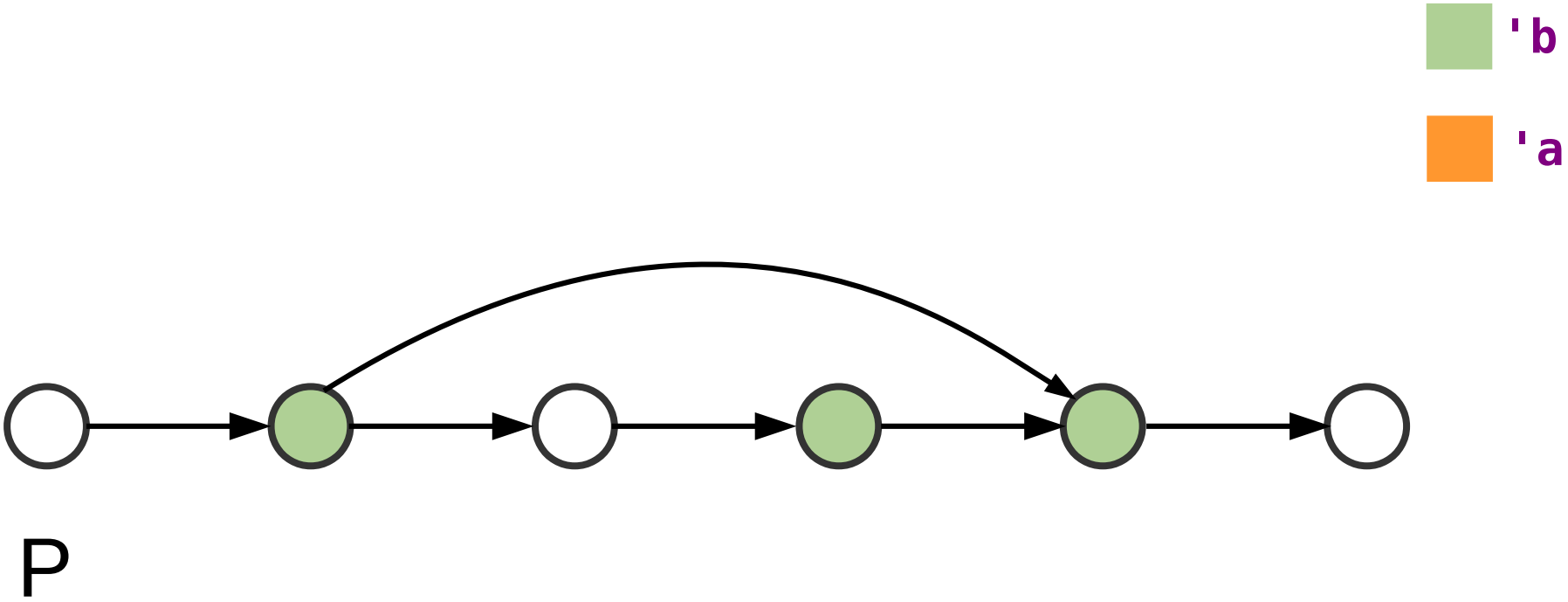

```
('a : 'b) @ P
```

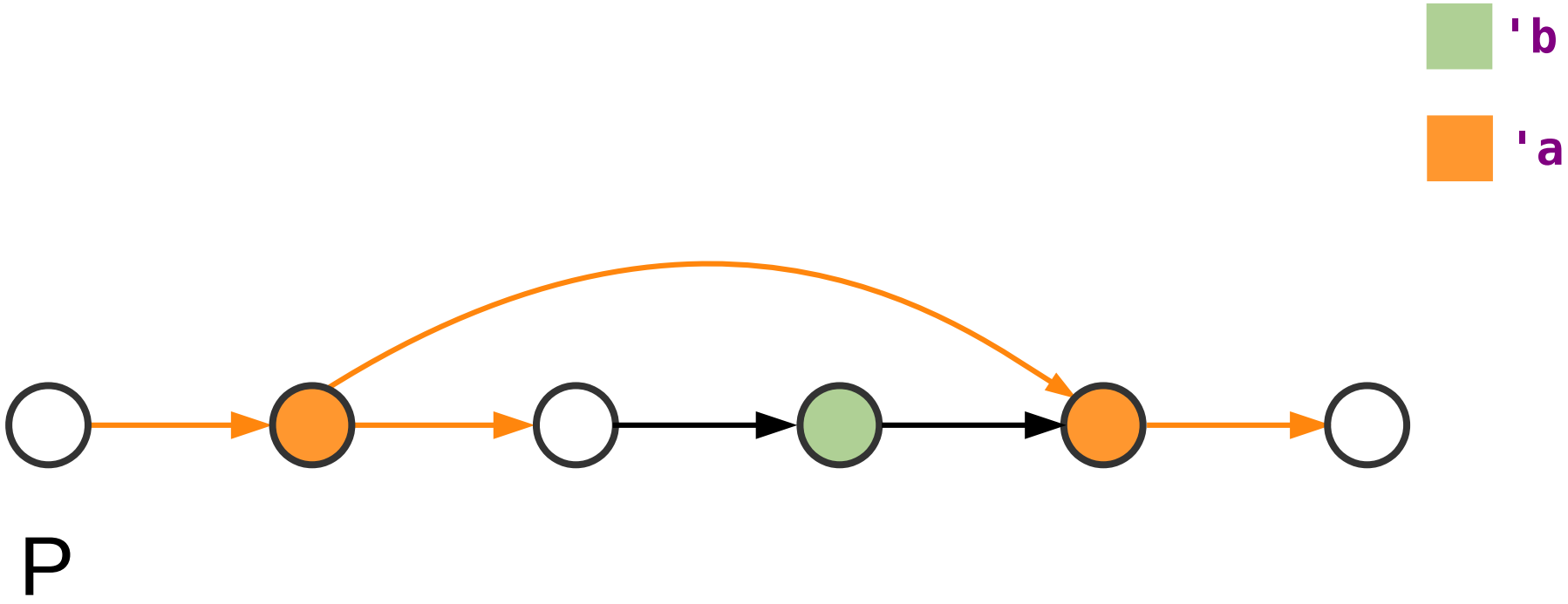

Phases of NLL

```
1. Building Liveness and Constraints
```

↓

```
2. Solving Constraints
```

↓

```
3. Compute Loans in Scope
```

↓

```
4. Check action and report Error
```

Phases of NLL

1. Building Liveness and Constraints

↓

2. Solving Constraints

↓

3. Compute Loans in Scope

↓

4. Check action and report Error

Phases of NLL

`('a : 'b) @ P`

1. Building Liveness and Constraints

2. Solving Constraints

3. Compute Loans in Scope

4. Check action and report Error

Phases of NLL

1. Building Liveness and Constraints

↓

2. Solving Constraints

↓

3. Compute Loans in Scope

↓

4. Check action and report Error

Phases of NLL

```
1. Building Liveness and Constraints
```

↓

a fixed-point iteration algorithm

```
2. Solving Constraints
```

↓

```
3. Compute Loans in Scope
```

↓

```
4. Check action and report Error
```

Phases of NLL

1. Building Liveness and Constraints

↓

2. Solving Constraints

↓

3. Compute Loans in Scope

↓

4. Check action and report Error

Phases of NLL

1. Building Liveness and Constraints

↓

2. Solving Constraints

↓

Borrow expressions ←

3. Compute Loans in Scope

↓

4. Check action and report Error

Phases of NLL

```
1. Building Liveness and Constraints
```

↓

```
2. Solving Constraints
```

↓

```
3. Compute Loans in Scope
```

↓

```
4. Check action and report Error
```

Liveness

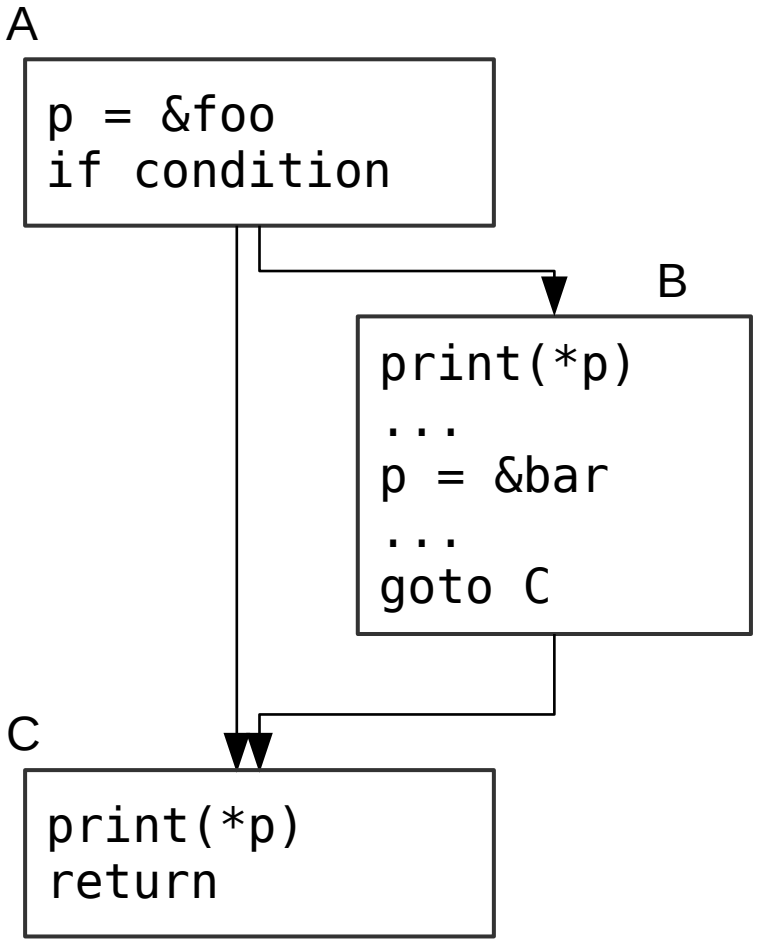


```
p : {  }
```

```
foo : {  }
```

```
bar : {  }
```

Liveness

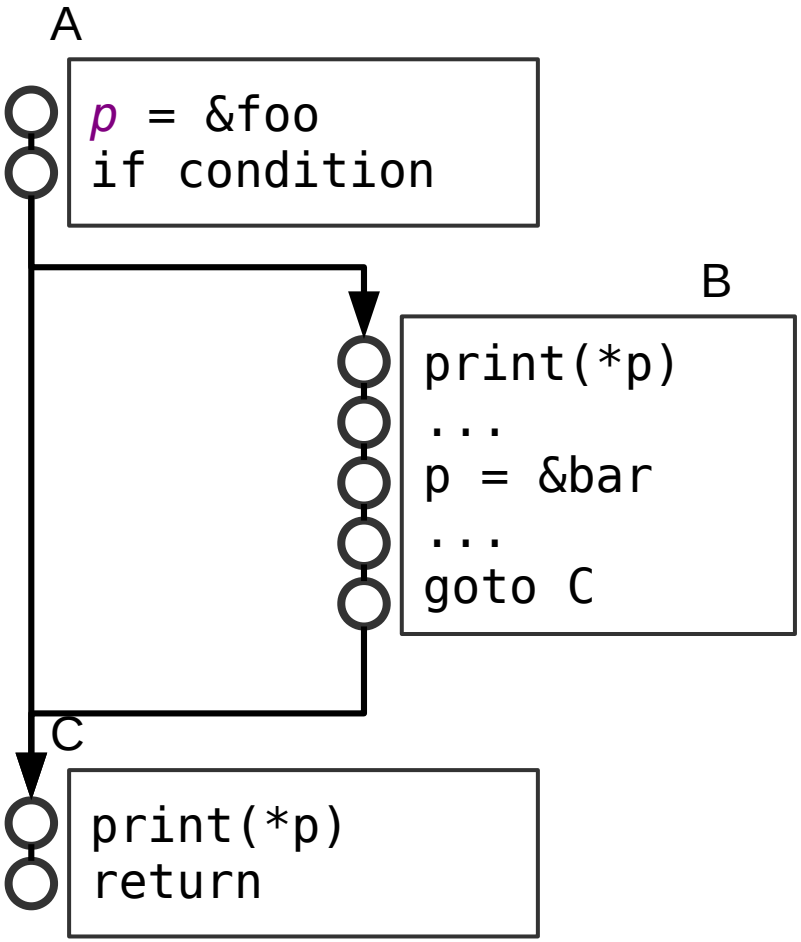


```
p : {  }
```

```
foo : {  }
```

```
bar : {  }
```

Liveness

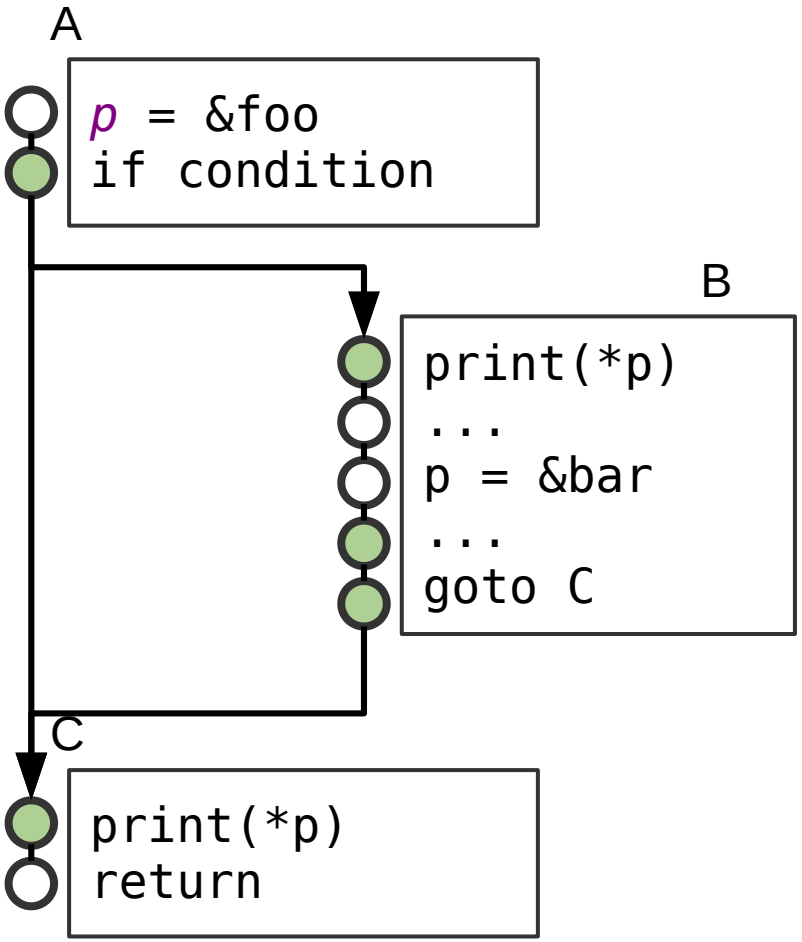


```
p : { A/1, B/0, B/3, B/4, C/0 }
```

```
foo : {  }
```

```
bar : {  }
```

Constraints

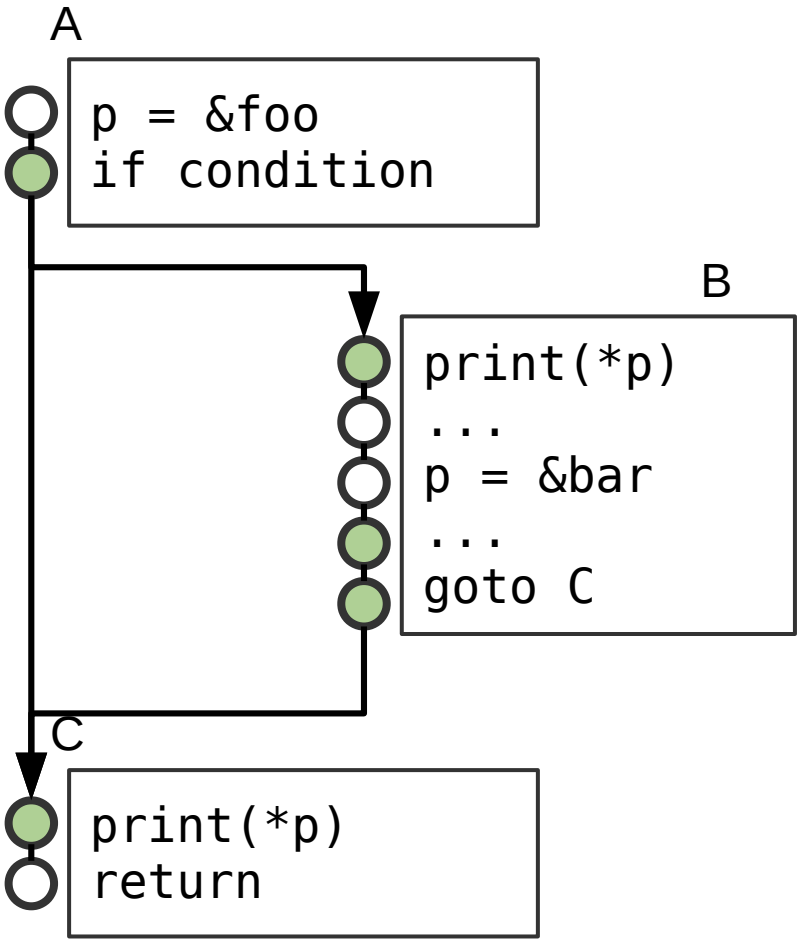


```
p : { A/1, B/0, B/3, B/4, C/0 }
```

```
foo : {  }
```

```
bar : {  }
```

Constraints

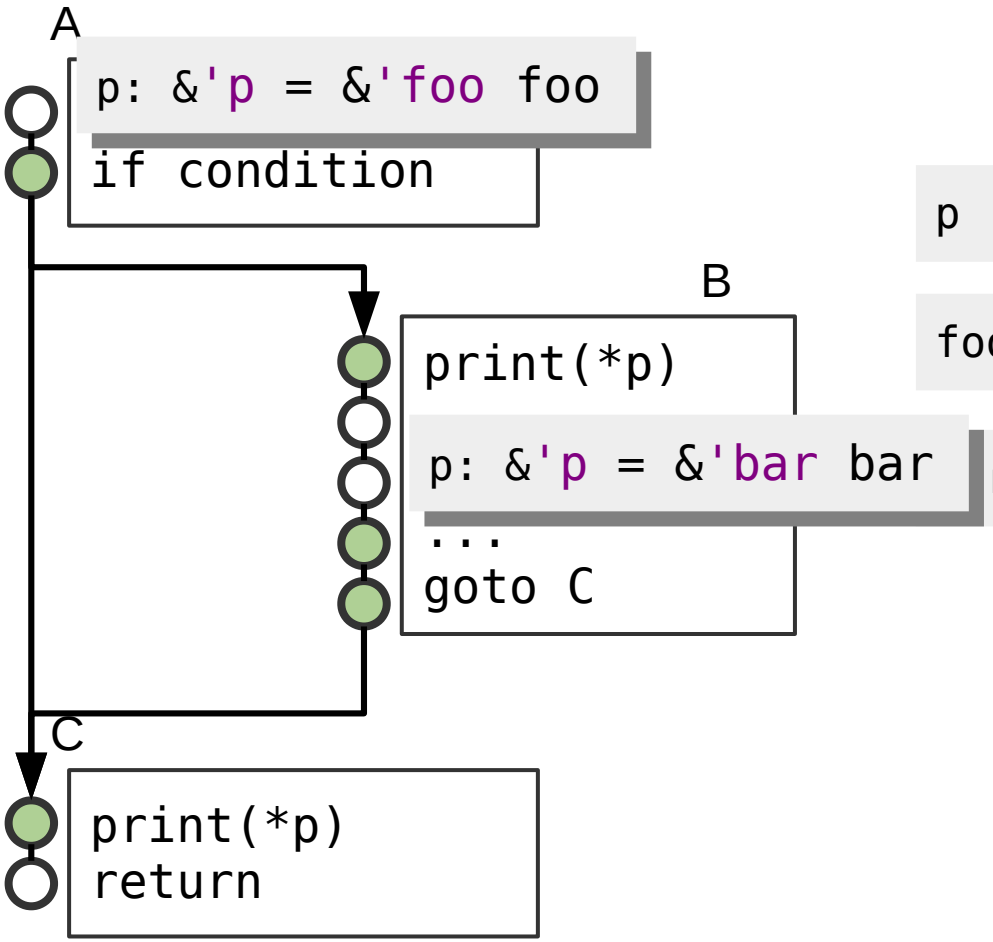


```
p : { A/1, B/0, B/3, B/4, C/0 }

foo : {  }

r : {  }
```

Constraints

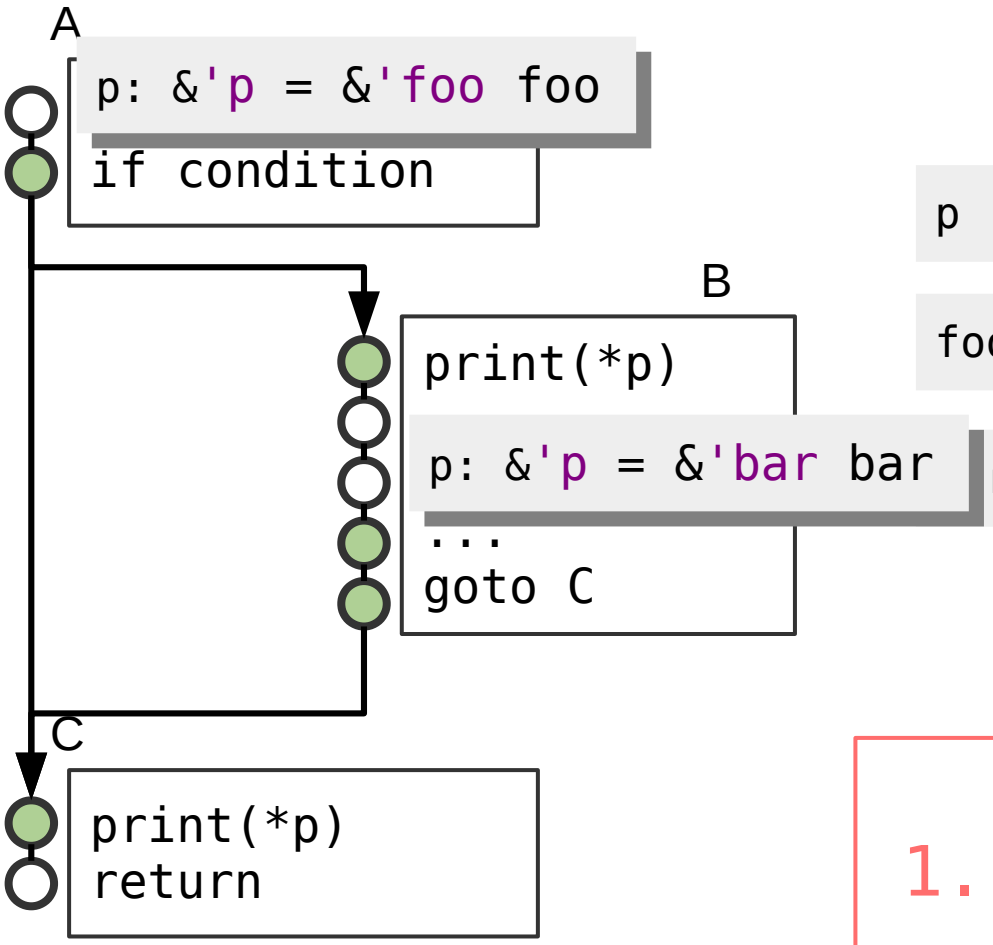


```
p : { A/1, B/0, B/3, B/4, C/0 }
```

```
foo : {  }
```

```
r : {  }
```

1. 'foo : 'p @ A/0

2. 'bar : 'p @ B/2

Constraints

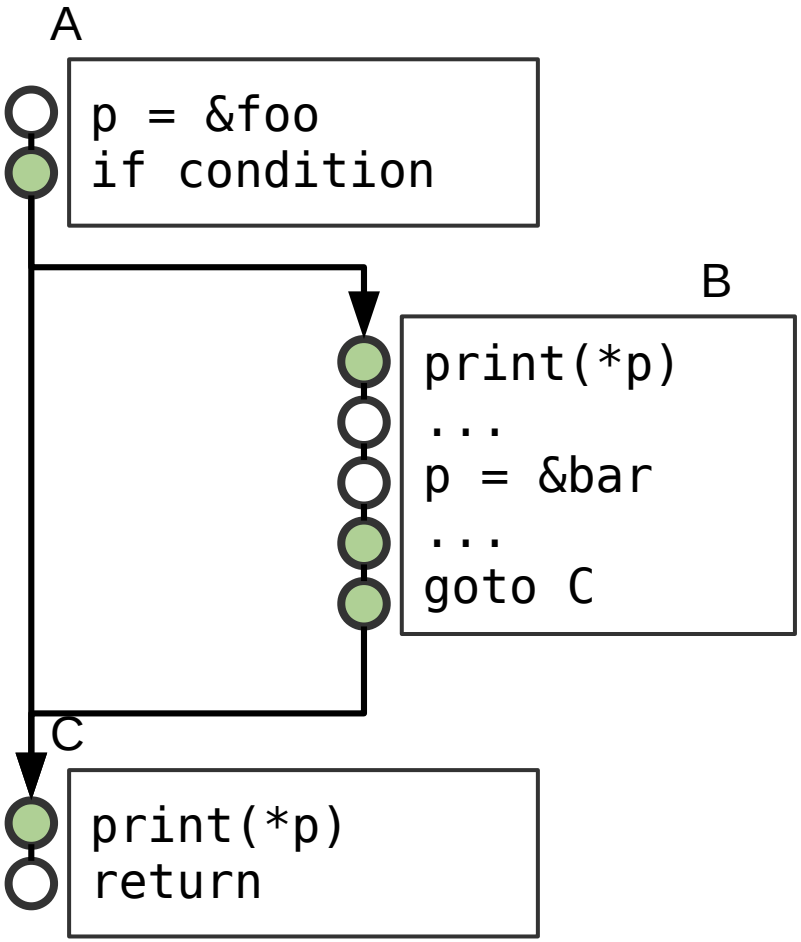


```
p : { A/1, B/0, B/3, B/4, C/0 }
```

```
foo : {  }
```

```
bar : {  }
```

```
1. 'foo : 'p @ A/0

2. 'bar : 'p @ B/2
```

Solving Constraints

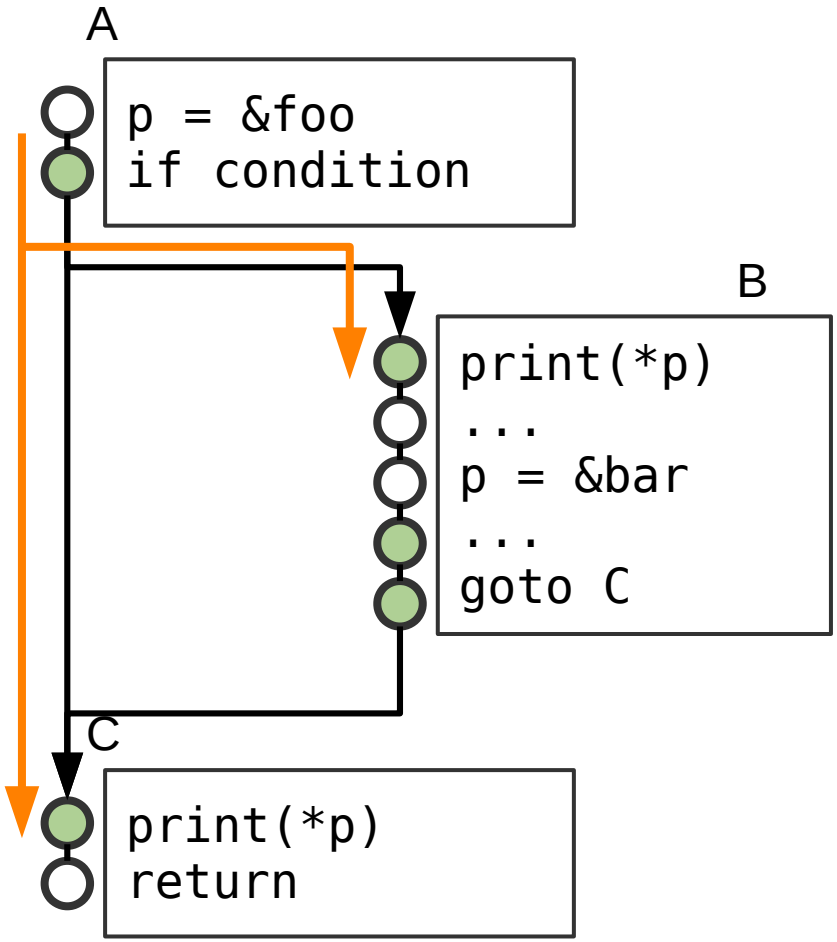


```
p : { A/1, B/0, B/3, B/4, C/0 }
```

```
foo : {  }
```

```
bar : {  }
```

```
1. 'foo : 'p @ A/0

2. 'bar : 'p @ B/2
```

Solving Constraints

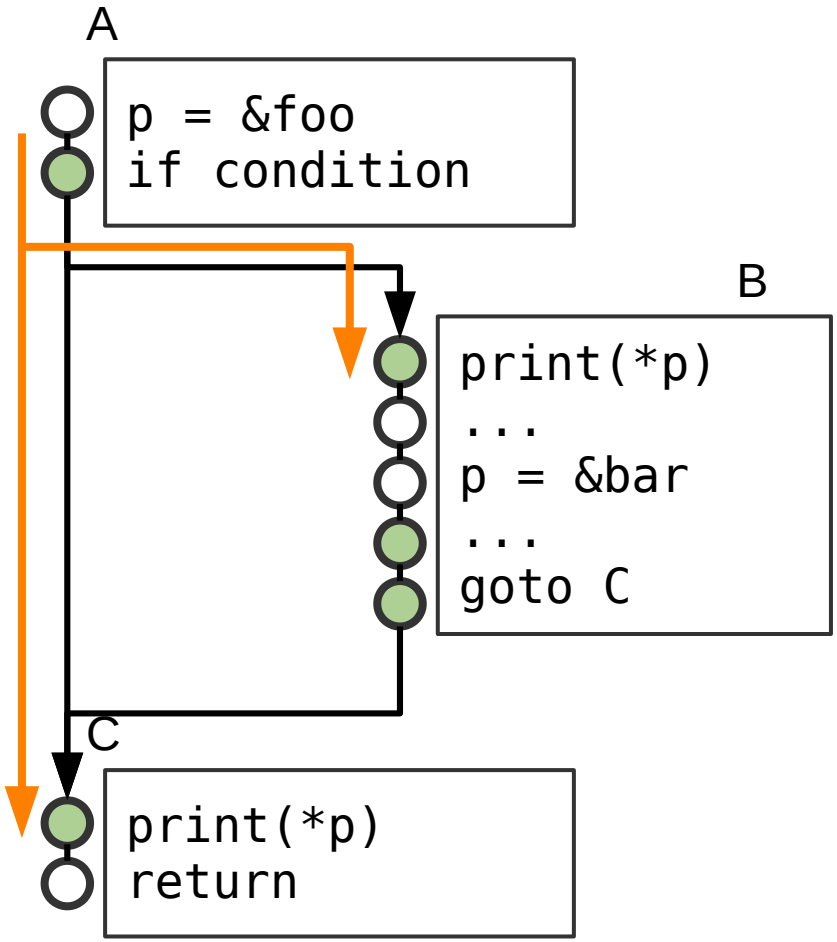


```
p : { A/1, B/0, B/3, B/4, C/0 }
```

```
foo : { A/1, B/0, C/0 }
```

```
bar : {  }
```

1. 'foo : 'p @ A/0

2. 'bar : 'p @ B/2

Solving Constraints

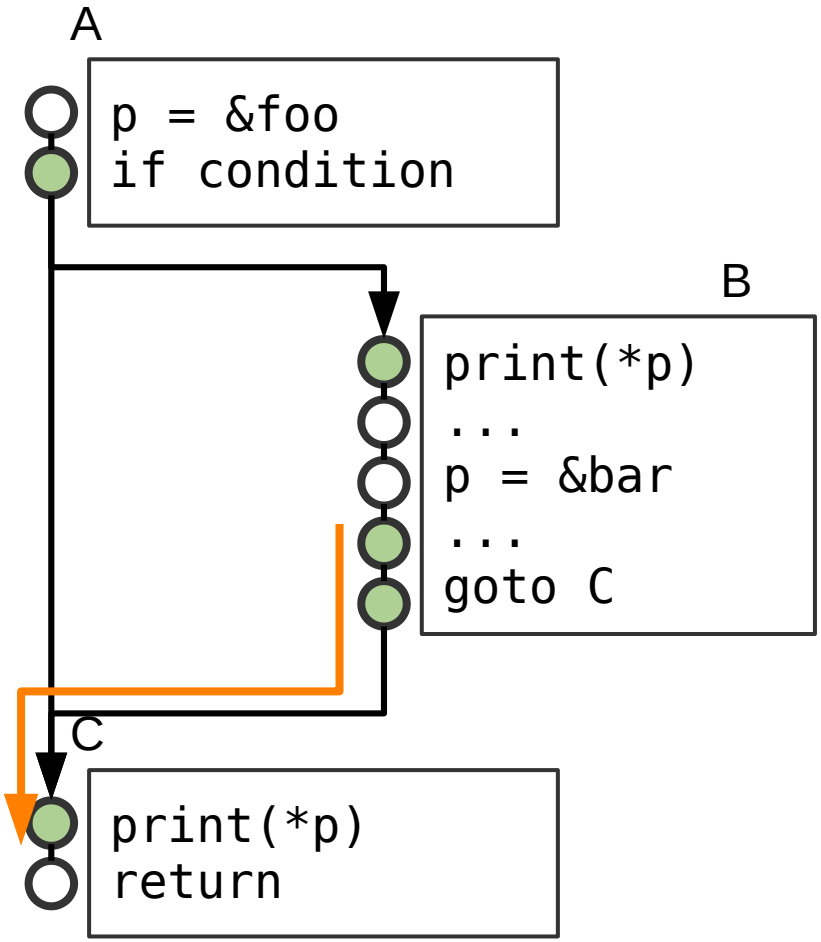


```
p : { A/1, B/0, B/3, B/4, C/0 }
```

```
foo : { A/1, B/0, C/0 }
```

```
bar : {  }
```

```
1. 'foo : 'p @ A/0

2. 'bar : 'p @ B/2
```

Solving Constraints

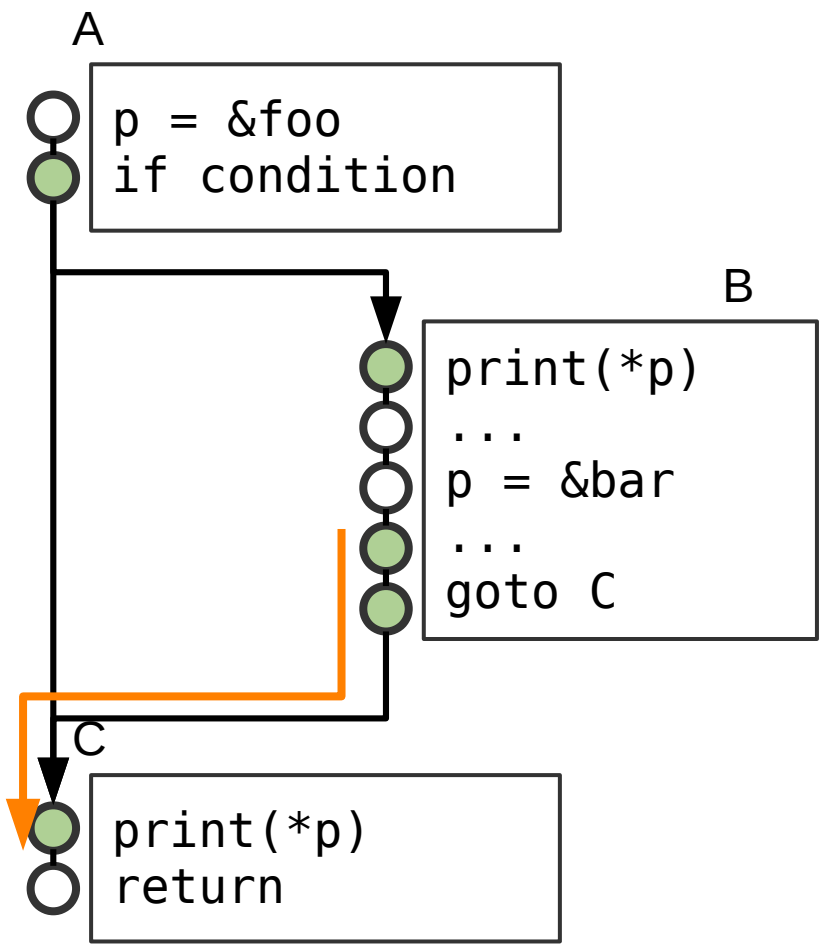


```
p : { A/1, B/0, B/3, B/4, C/0 }
```

```
foo : { A/1, B/0, C/0 }
```

```
bar : { B/3, B/4, C/0 }
```

```
1. 'foo : 'p @ A/0

2. 'bar : 'p @ B/2
```

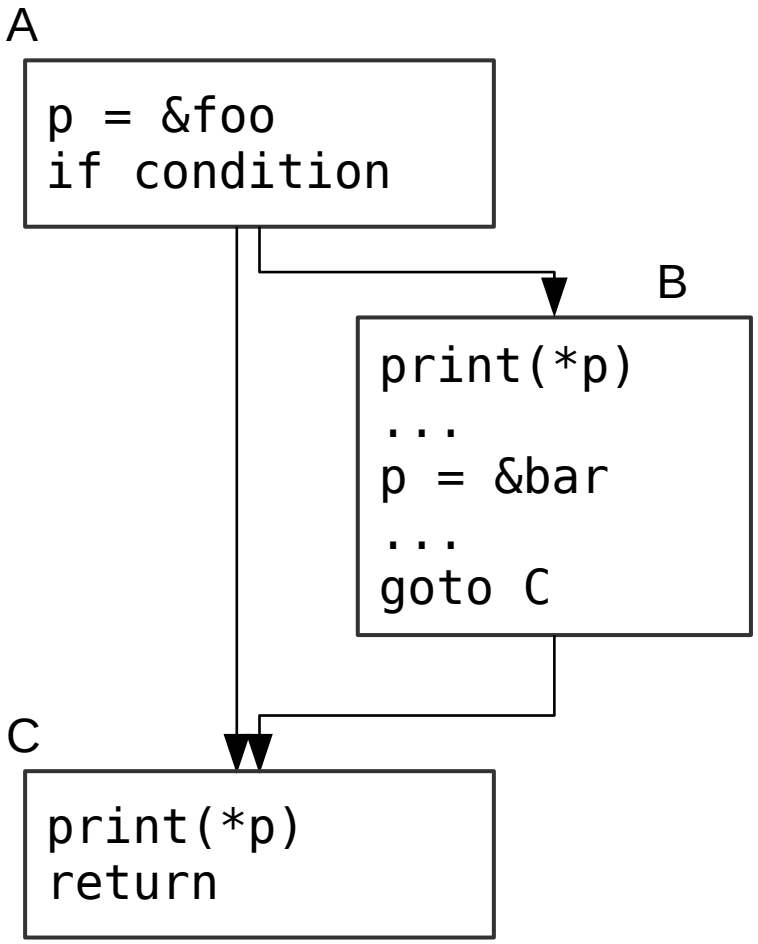

Lifetimes:

```
p : { A/1, B/0, B/3, B/4, C/0 }
```

```
foo : { A/1, B/0, C/0 }
```

```
bar : { B/3, B/4, C/0 }
```

Compute Loans in Scope

loans: a set of borrow expressions

Compute Loans in Scope

loans: a set of borrow expressions

a Loan:

```
A/0 p = &'foo foo;
```

Compute Loans in Scope

loans: a set of borrow expressions

a Loan:

```
A/0 p = &'foo foo;
```

```
Loan L0
{
   point:  A/4,
   path:   foo,
   kind:   shared
   region: 'foo {
      A/1, B/0, C/0
   }
}
```

Compute Loans in Scope

loans: a set of borrow expressions

Borrow checker will compute loans at each point via fixed-point dataflow computation with transfer function:

Compute Loans in Scope

loans: a set of borrow expressions

Borrow checker will compute loans at each point via fixed-point dataflow computation with transfer function:

-Example: Dataflow equation of Live variable analysis:

$$Live_{\text{in}}(s) = Gen(s) \cup (Live_{\text{out}}(s) \cap \overline{Kill(s)})$$

Compute Loans in Scope

loans: a set of borrow expressions

Borrow checker will compute loans at each point via fixed-point dataflow computation with transfer function:

Transfer function:

```
Kill Li @ P    If    P ∉ Li.region

Gen  Li @ P    If    Borrow expression occur @ P

Kill Li @ P    If    LV ∈ Li.path
```

```rust
let list: &mut List<T> = &mut a;

let v = &mut (*list).value;

list = &mut b; // assignment

use(v)

use(list)
```

```rust
let list: &mut List<T> = &mut a;
```

```rust
let v = &mut (*list).value;
```

```rust
list = &mut b; // assignment
```

```rust
use(v)
```

```rust
use(list)
```

```rust
let list: &mut List<T> = &mut a;
```

```rust
let v = &mut (*list).value;
```

```rust
list = &mut b; // assignment
```

```rust
use(v)
```

```rust
use(list)
```

```rust
let list: &mut List<T> = &mut a;
```

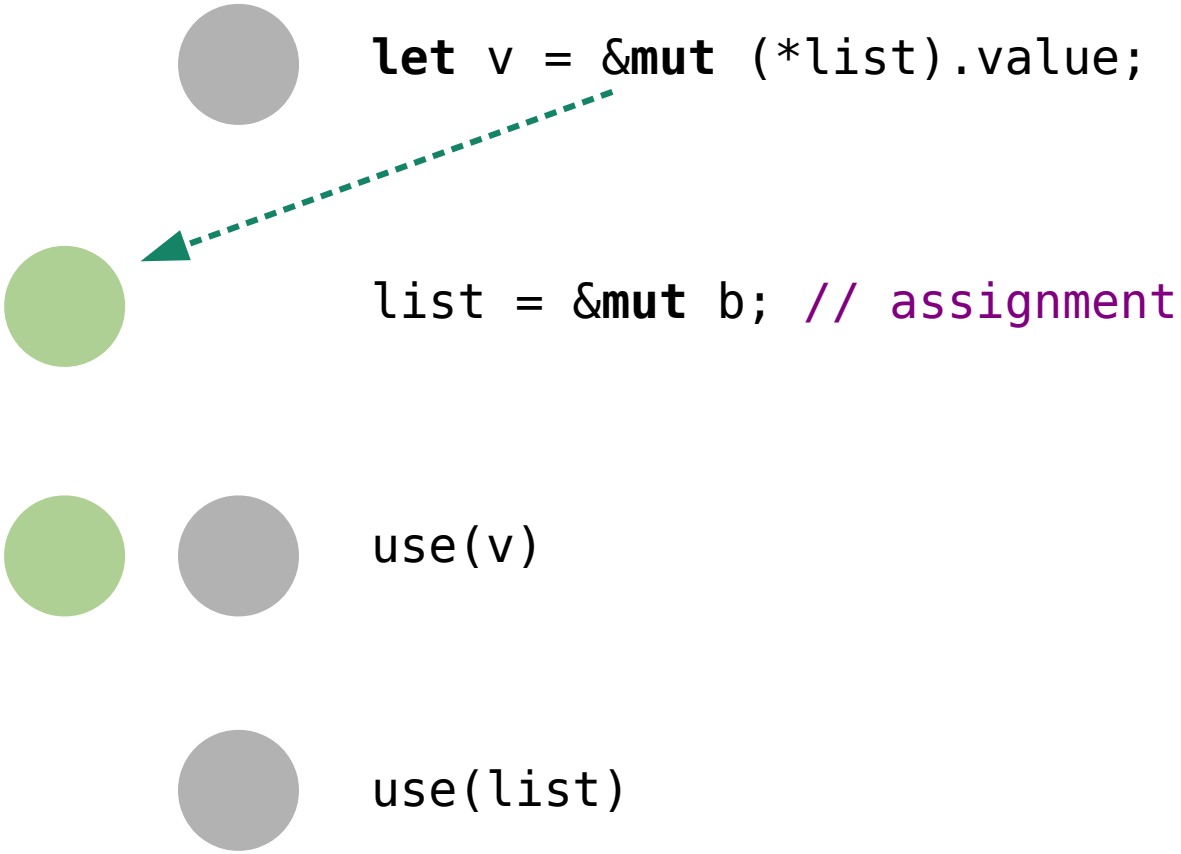

```rust
let v = &mut (*list).value;
```

```rust
list = &mut b; // assignment
```

```rust
use(v)
```

```rust
use(list)
```

```rust
let list: &mut List<T> = &mut a;
```

```rust
let v = &mut (*list).value;
```

```rust
list = &mut b; // assignment
```

```rust
use(v)
```

```rust
use(list)
```

```rust
let list: &mut List<T> = &mut a;
```

```rust
let v = &mut (*list).value;
```

```rust
list = &mut b; // assignment
```

```rust
use(v)
```

```rust
use(list)
```

```
let list: &mut List<T> = &mut a;

let v = &mut (*list).value;

list = &mut b; // assignment

use(v)

use(list)
```

gen L1

```
let list: &mut List<T> = &mut a;

let v = &mut (*list).value;

list = &mut b; // assignment

use(v)

use(list)
```

gen L1

kill L1

gen L2

```
Loan L1
{
    point:  A/1,
    path:  {
        (*list).value ,
        *list,
        list
    },
    kind:   shared
    region: 'c {
        A/2, A/3
    }
}
```

```
let list: &mut List<T> = &mut a;
```

```
let v = &mut (*list).value;
```

gen L1

```
list = &mut b; // assignment
```

kill L1

gen L2

```
use(v)
```

```
use(list)
```

```
Loan L1
{
    point:  A/1,
    path:  {
        (*list).value ,
        *list,
        list
    },
    kind:   shared
    region: 'c {
        A/2, A/3
    }
}
```

```
let list: &mut List<T> = &mut a;
```

```
let v = &mut (*list).value;
```

gen L1

```
list = &mut b; // assignment
```

kill L1

gen L2

```
use(v)
```

```
use(list)
```

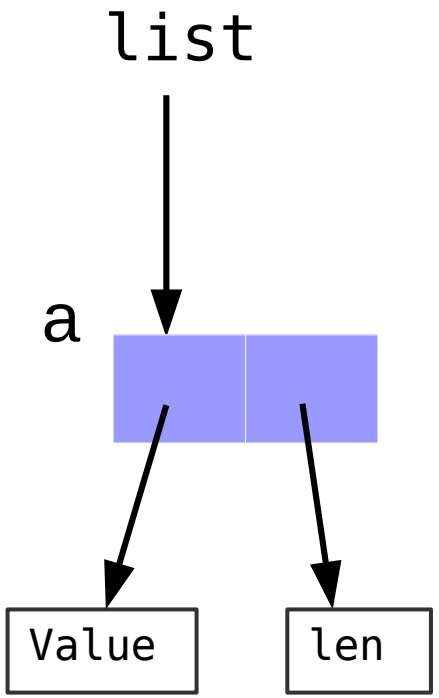
list
a
Value
len

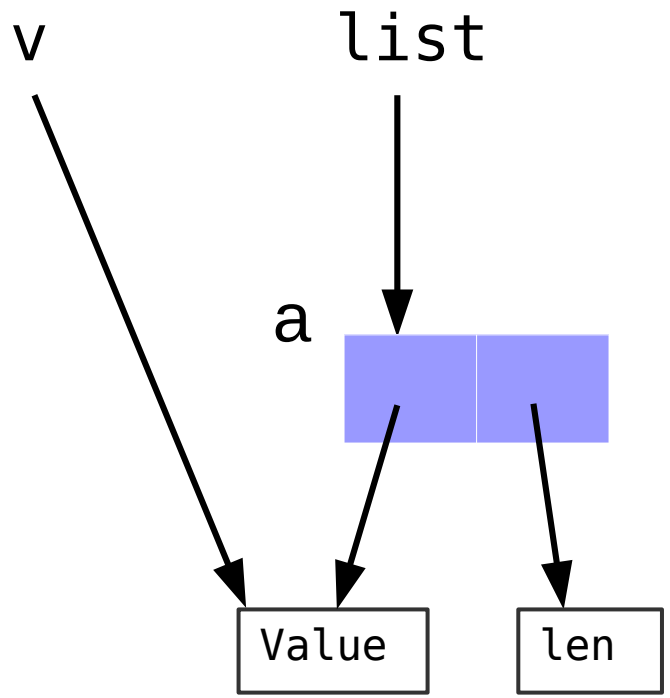
v
list
a
Value
len

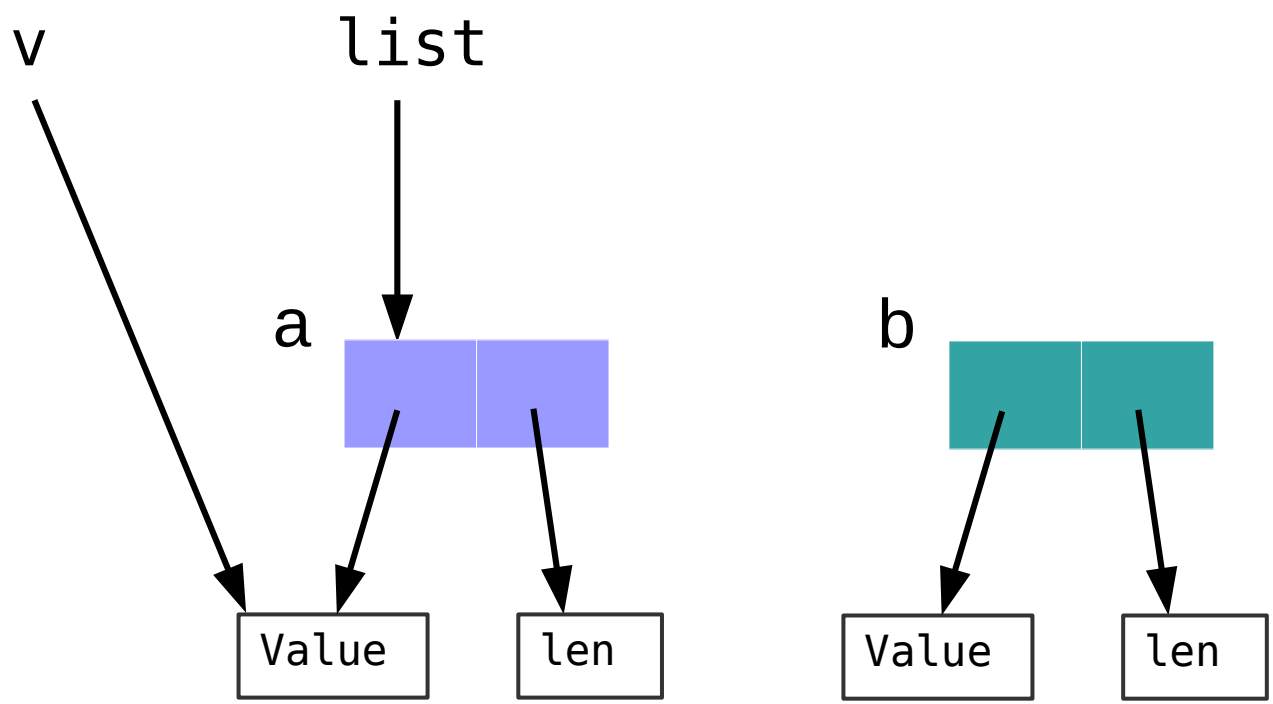
v
list
a
b
Value
len
Value
len

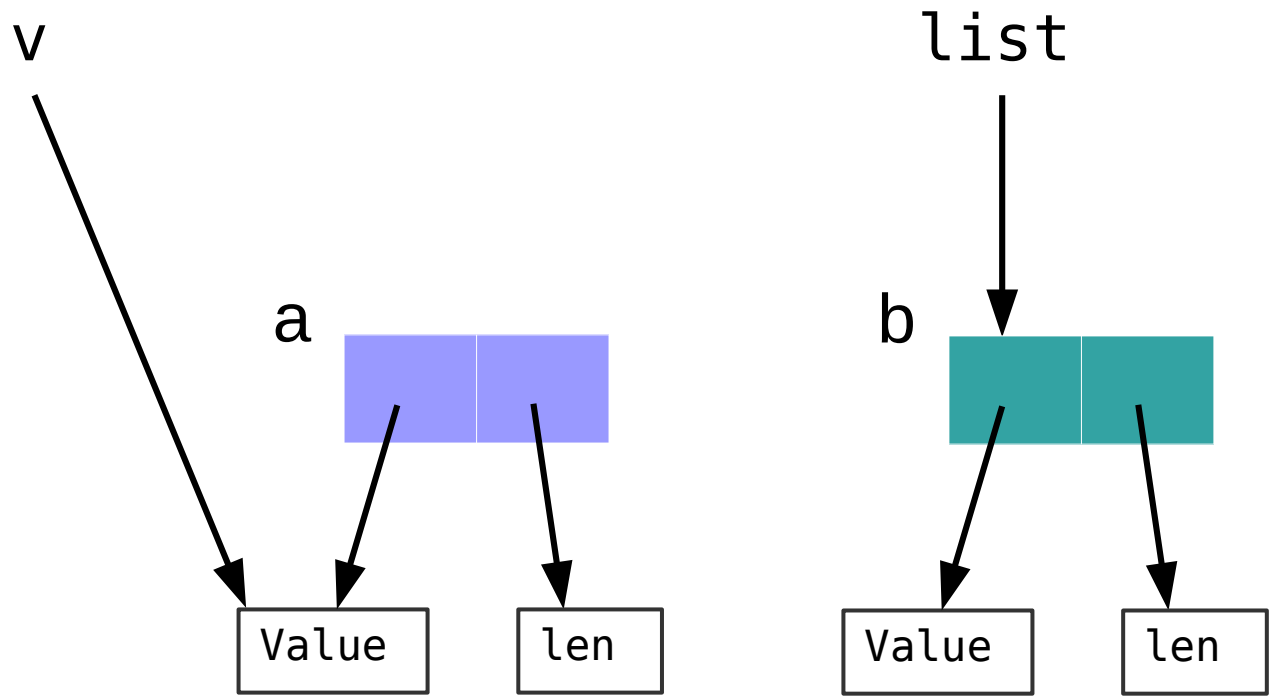
v
list
a
b
Value
len
Value
len

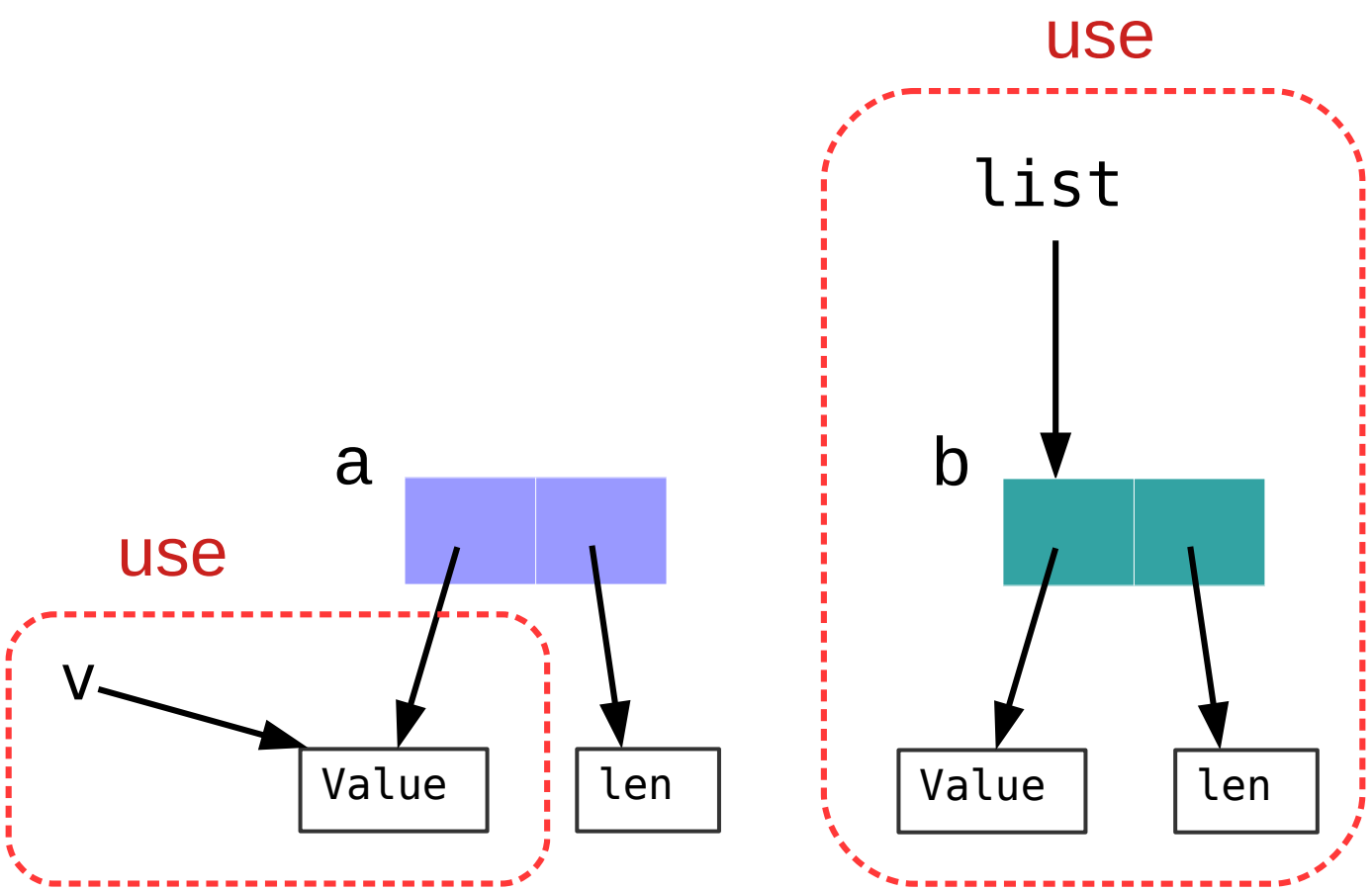
use
list
a
b
use
v
Value
len
Value
len

Another Example

```rust
struct Thing;

impl Thing {
    fn maybe_next(&mut self) -> Option<&mut Self> {
        None
    }
}

fn main() {
    let mut temp = &mut Thing;
    loop {
        match temp.maybe_next() {

            Some(v) => { temp = v; }

            None => { }
        }
    }
}
```

```rust
struct Thing;

impl Thing {
    fn maybe_next(&mut self) -> Option<&mut Self> {
        None
    }
}

fn main() {
    let mut temp = &mut Thing;
    loop {
        match temp.maybe_next() {

            Some(v) => { temp = v; }

            None => { }
        }
    }
}
```

mutable borrow starts here in previous iteration of loop

```rust
struct Thing;

impl Thing {
    fn maybe_next(&mut self) -> Option<&mut Self> {
        None
    }
}

fn main() {
    let mut temp = &mut Thing;
    loop {
        match temp.maybe_next()

            Some(v) => { temp = v; }

            None => { }
        }
    }
}
```

```rust
struct Thing;

impl Thing {
    fn maybe_next(&mut self) -> Option<&mut Self> {
        None
    }
}

fn main() {
    let mut temp = &mut Thing;
    loop {
        match temp.maybe_next()

            Some(v) => { temp = v; }

            None => { }
        }
    }
}
```

gen Loan: L0

```rust
struct Thing;

impl Thing {
    fn maybe_next(&mut self) -> Option<&mut Self> {
        None
    }
}

fn main() {
    let mut temp = &mut Thing;
    loop {
        match temp.maybe_next() {

            Some(v) => { temp = v; }

            None => { }
        }
    }
}
```

gen Loan: L0

```rust
struct Thing;

impl Thing {
    fn maybe_next(&mut self) -> Option<&mut Self> {
        None
    }
}

fn main() {
    let mut temp = &mut Thing;
    loop {
        match temp.maybe_next() {

            Some(v) => { temp = v; }

            None => { }
        }
    }
}
```

path: temp

gen Loan: L0

```rust
struct Thing;

impl Thing {
    fn maybe_next(&mut self) -> Option<&mut Self> {
        None
    }
}

fn main() {
    let mut temp = &mut Thing;
    loop {
        match temp.maybe_next() {

            Some(v) => { temp = v; }

            None => { }
        }
    }
}
```

path: temp

gen Loan: L0

kill L0

```rust
struct Thing;

impl Thing {
    fn maybe_next(&mut self) -> Option<&mut Self> {
        None
    }
}

fn main() {
    let mut temp = &mut Thing;
    loop {
        match temp.maybe_next() {

            Some(v) => { temp = v; }

            None => { }
        }
    }
}
```

path: temp

gen Loan: L0

kill L0

But L0 not be killed in None arm

```rust
struct Thing;

impl Thing {
    fn maybe_next(&mut self) -> Option<&mut Self> {
        None
    }
}

fn main() {
    let mut temp = &mut Thing;
    loop {
        match temp.maybe_next() {

            Some(v) => { temp = v; }

            None => { break; }
        }
    }
}
```

Future : Polonius

```rust
struct Thing;

impl Thing {
    fn maybe_next(&mut self) -> Option<&mut Self> {
        None
    }
}

fn main() {
    let mut temp = &mut Thing;
    loop {
        match temp.maybe_next() {

            Some(v) => { temp = v; }

            None => { }
        }
    }
}
```

require relation is dropped

```rust
struct Thing;

impl Thing {
    fn maybe_next(&mut self) -> Option<&mut Self> {
        None
    }
}

fn main() {
    let mut temp = &mut Thing;
    loop {
        match temp.maybe_next() {

            Some(v) => { temp = v; }

            None => { }
        }
    }
}
```

$$\frac{R_1 \; live \; at \; P \qquad R_1 \; require \; L \; at \; P}{L \; live \; at \; P}$$

require relation is dropped

```rust
struct Thing;

impl Thing {
    fn maybe_next(&mut self) -> Option<&mut Self> {
        None
    }
}

fn main() {
    let mut temp = &mut Thing;
    loop {
        match temp.maybe_next() {

            Some(v) => { temp = v; }

            None => { }
        }
    }
}
```

$$\frac{R_1 \; live \; at \; P \qquad R_1 \; require \; L \; at \; P}{L \; live \; at \; P}$$

So, L will not live at None arm

Leetcode example N0026

Leetcode - N0026

Remove duplicated from sorted array

Input : `0, 0, 1, 1, 1, 2, 2, 3, 3, 4`

Leetcode - N0026

Remove duplicated from sorted array

Input : `0, 0, 1, 1, 1, 2, 2, 3, 3, 4`

Output : `0, 1, 2, 3, 4, 2, 2, 3, 3, 4`

Return : 5

CPP

```
int removeDuplicates(vector<int>& nums) {

    if (nums.empty()) return 0;

    auto it = nums.begin();

    int cache = *it;

    for (auto x : nums) {

        if (x != cache) {
            cache = *(++it) = x;
        }
    }

    return it - nums.begin() + 1;

}
```

CPP

```
int removeDuplicates(vector<int>& nums) {

    if (nums.empty()) return 0;

    auto it = nums.begin();

    int cache = *it;

    for (auto x : nums) {

        if (x != cache) {
            cache = *(++it) = x;
        }
    }

    return it - nums.begin() + 1;

}
```

Borrow as **mut**

CPP

```
int removeDuplicates(vector<int>& nums) {

    if (nums.empty()) return 0;

    auto it = nums.begin();

    int cache = *it;

    for (auto x : nums) {

        if (x != cache) {
            cache = *(++it) = x;
        }
    }

    return it - nums.begin() + 1;

}
```

Borrow as **mut**

Borrow as **immut**

Rust

```rust
pub fn remove_duplicates(nums: &mut Vec<i32>) -> i32 {

    if nums.is_empty() {
        return 0;
    }

    let mut it = nums.iter_mut();

    let mut cache = *(it.next().unwrap());

    let mut count = 1;

    for &x in nums.iter() {

        if x != cache {

            …
```

Rust

```rust
pub fn remove_duplicates(nums: &mut Vec<i32>) -> i32 {

    if nums.is_empty() {
        return 0;
    }

    let mut it = nums.iter_mut()

    let mut cache = *(it.next().unwrap());

    let mut count = 1;

    for &x in nums.iter() {

        if x != cache {

            …
```

Rust

```rust
pub fn remove_duplicates(nums: &mut Vec<i32>) -> i32 {

    if nums.is_empty() {
        return 0;
    }

    let mut it = nums.iter_mut()

    let mut cache = *(it.next().unwrap());

    let mut count = 1;

    for &x in nums.iter() {

        if x != cache {

            …
```

Rust

```rust
pub fn remove_duplicates(nums: &mut Vec<i32>) -> i32 {

    if nums.is_empty() {
        return 0;
    }

    let mut it = nums.iter_mut()

    let mut cache = *(it.next().unwrap());

    let mut count = 1;

    for &x in nums.iter() {

        if x != cache {

            …
```

use **x** and **it** at the same time

Rust

```rust
pub fn remove_duplicates(nums: &mut Vec<i32>) -> i32 {

    if nums.is_empty() {
        return 0;
    }

    let mut count = 1;

    let mut cache = nums[0];

    for i in 1..nums.len() {
        if nums[i] != cache {

            count+=1;

            nums[count] = nums[i];

            cache = nums[i];
        }
    }
    count
}
```

Rust

```rust
pub fn remove_duplicates(nums: &mut Vec<i32>) -> i32 {

    if nums.is_empty() {
        return 0;
    }

    let mut count = 1;

    let mut cache = nums[0];

    for i in 1..nums.len() {
        if nums[i] != cache {

            count+=1;

            nums[count] = nums[i];

            cache = nums[i];
        }
    }
    count
}
```

Rust

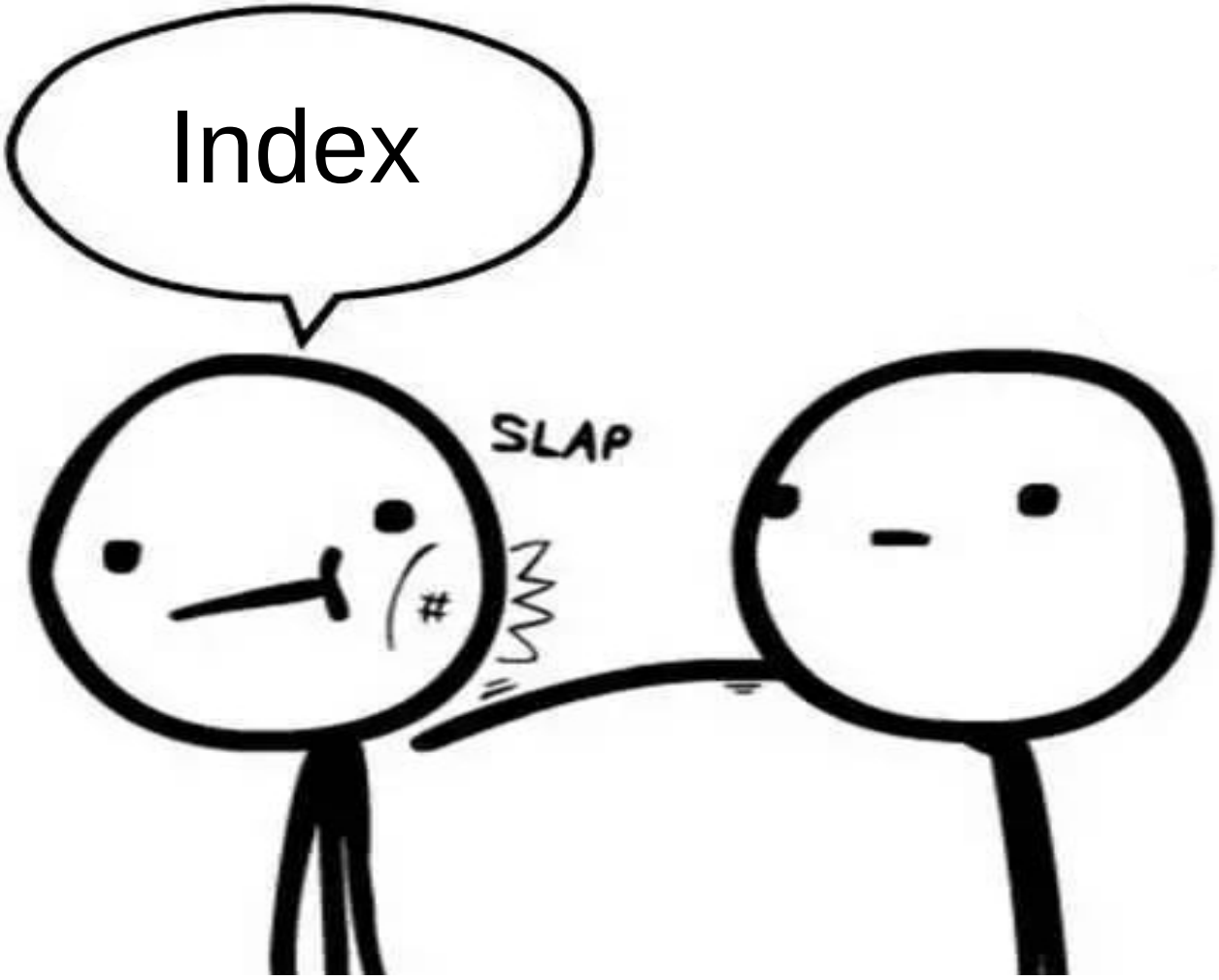

Rust

```
if nums.is_empty() { return 0; }

let mut p = nums.as_mut_ptr();

let mut cache = unsafe { *p };

let mut count = 1;

for &x in nums.iter() {
    if x != cache {
        unsafe {
            p = p.offset(1);
            *p = x;
            cache = *p;
        }

        count += 1;
    }
}

return count;
```

```
if nums.is_empty() { return 0; }

let mut p = nums.as_mut_ptr();

let mut cache = unsafe { *p };

let mut count = 1;

for &x in nums.iter() {
    if x != cache {
        unsafe {
            p = p.offset(1);
            *p = x;
            cache = *p;
        }

        count += 1;
    }
}

return count;
```

```
if nums.is_empty() { return 0; }

let mut p = nums.as_mut_ptr();

let mut cache = unsafe { *p };

let mut count = 1;

for &x in nums.iter() {
    if x != cache {
        unsafe {
            p = p.offset(1);
            *p = x;
            cache = *p;
        }

        count += 1;
    }
}

return ((p as usize - nums.as_ptr() as usize) >> 2) as i32 + 1
```

```rust
fn steal<'a, 'b, T>(x: &'a mut T) -> &'b mut T {
    let _tmp = x as *mut T;
    unsafe { std::mem::transmute::<*mut T, &mut T>(x) }
}
```

```rust
fn steal<'a, 'b, T>(x: &'a mut T) -> &'b mut T {
    let _tmp = x as *mut T;
    unsafe { std::mem::transmute::<*mut T, &mut T>(x) }
}
```

```
if nums.is_empty() { return 0; }

let mut it = steal(nums).iter_mut();

let mut cache = *(it.next().unwrap());
let mut count = 1;

for &x in nums.iter() {

    if x != cache {

        *(it.next().unwrap()) = x;

        cache = x;

        count += 1;
    }
}

return count;
```

```
if nums.is_empty() { return 0; }

let mut it = steal(nums).iter_mut();

let mut cache = *(it.next().unwrap());


nums.iter().for_each(|&e| if e != cache {

    *(it.next().unwrap()) = e;

    cache = e;

});

return (nums.len() - it.len()) as i32;
```

```
if nums.is_empty() { return 0; }

let mut it = steal(nums).iter_mut();

let mut cache = *(it.next().unwrap());


nums.iter().for_each(|&e| if e != cache {

    *(it.next().unwrap()) = e;

    cache = e;

});

return (nums.len() - it.len()) as i32;
```

And so once again, the day is saved
thanks to… The Unsafe

That's All

QA

github.com/rniczh