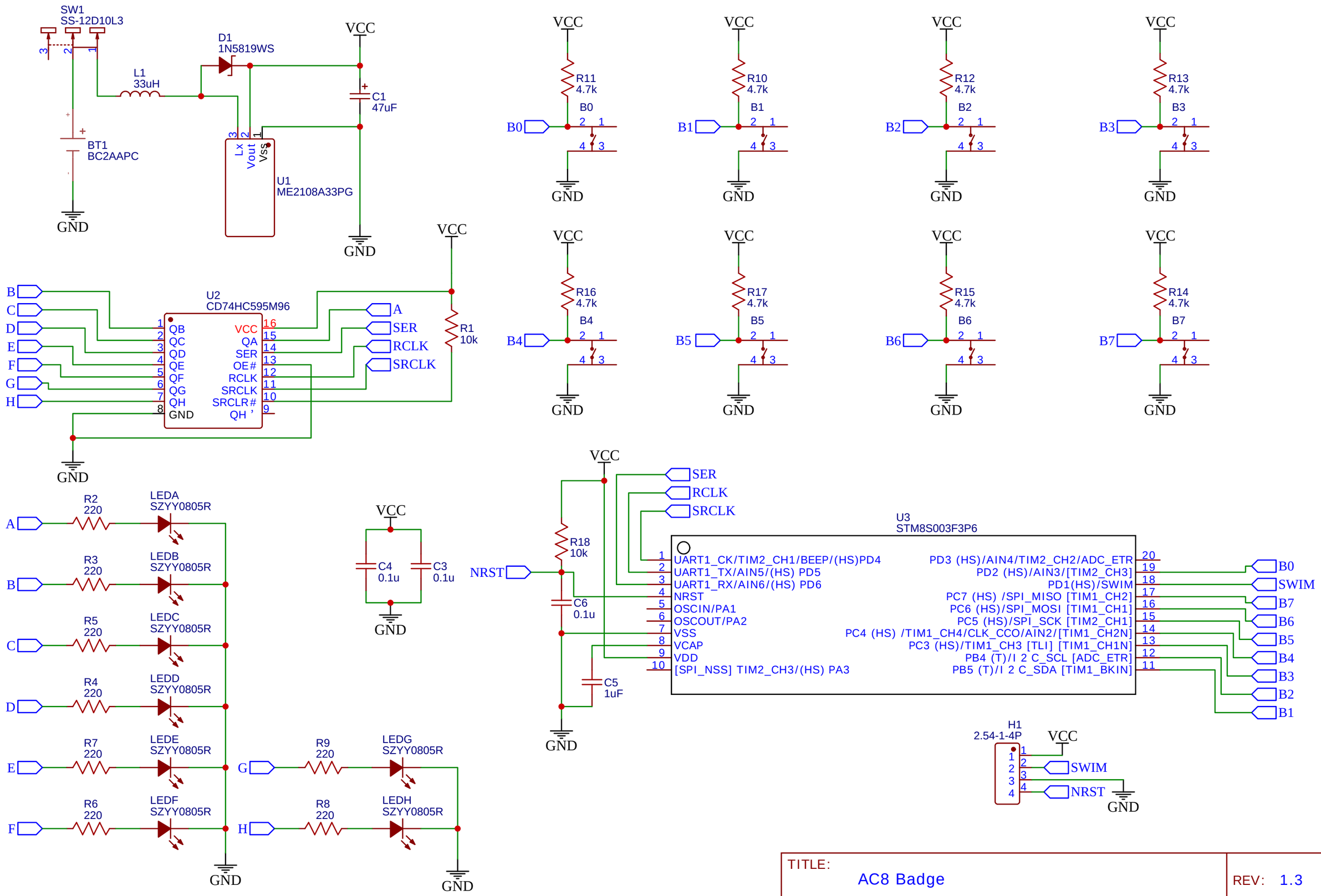

TITLE: AC8 Badge		REV: 1.3
	Company: N/A	Sheet: 1/1
	Date: 03 FEB 2024	Drawn By: Richard Shmel