Computer Architectures Session 3

Pipelined RISC-V processor with control-hazard handling

&

Advanced acceleration

TAs :
Xiaoling Yi (xiaoling.yi@kuleuven.be)
Chao Fang (chao.fang@kuleuve.be)
Adrian Kneip (adrian.kneip@kuleuve.be)

Timeline

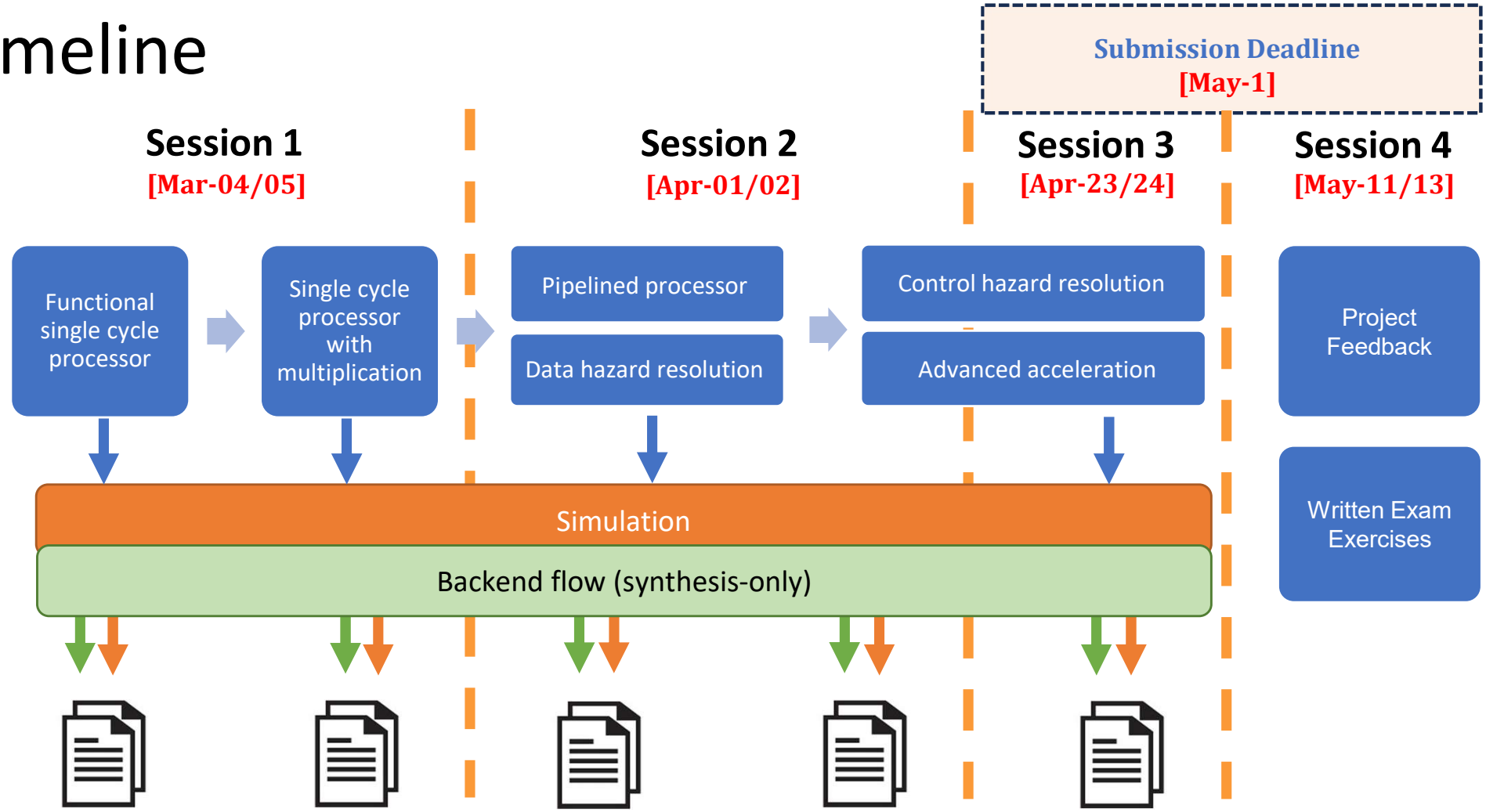
Submission Deadline
[May-1]
Session 1
[Mar-04/05]
Session 2
[Apr-01/02]
Session 3
[Apr-23/24]
Session 4
[May-11/13]
Functional single cycle processor
Single cycle processor with multiplication
Pipelined processor
Data hazard resolution
Control hazard resolution
Advanced acceleration
Project Feedback
Written Exam Exercises
Simulation
Backend flow (synthesis-only)

Last session recap

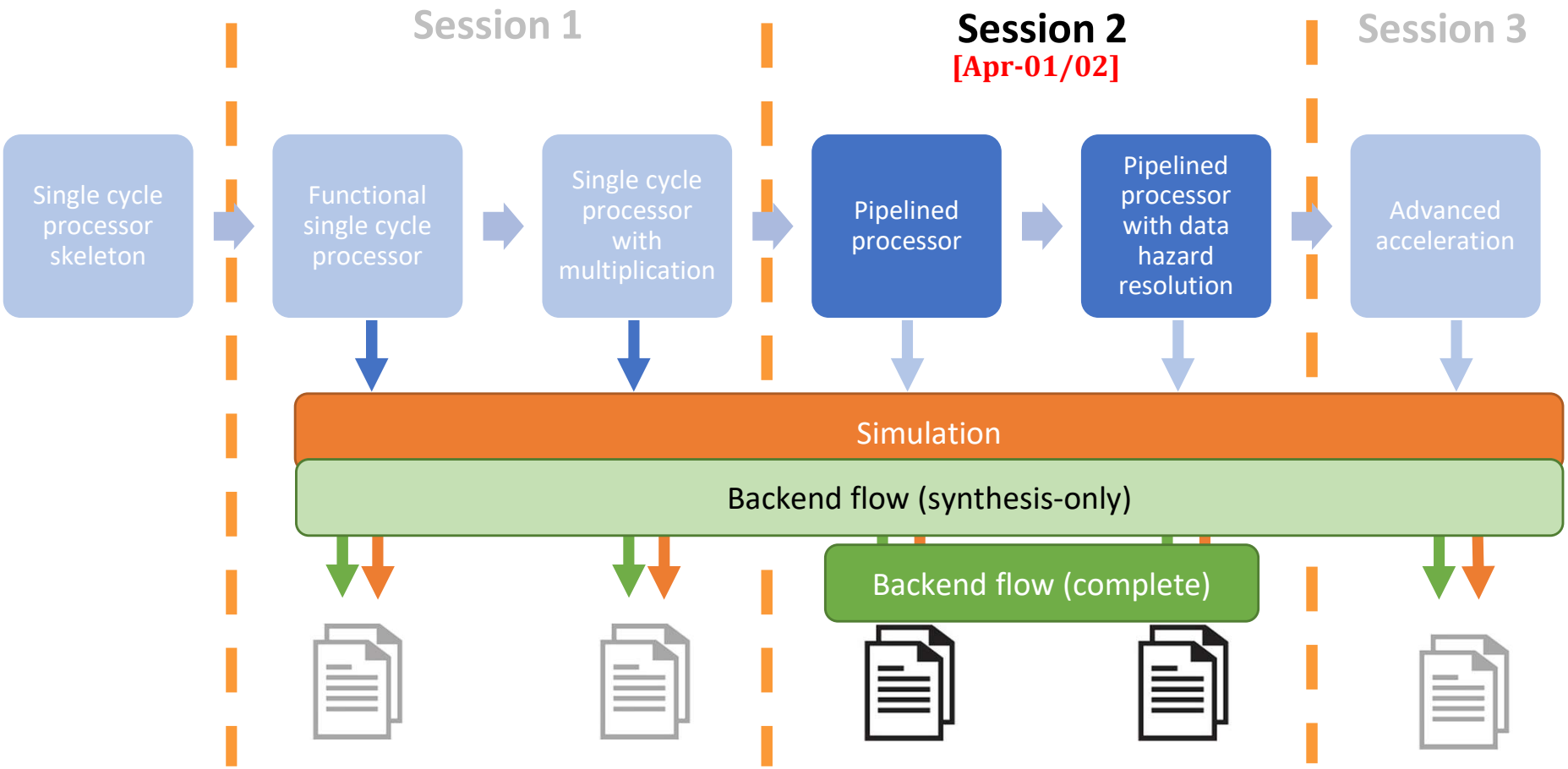

Last session recap

Pipelined Processor

✓ Mult2

✓ Mult3

✓ Backend complete

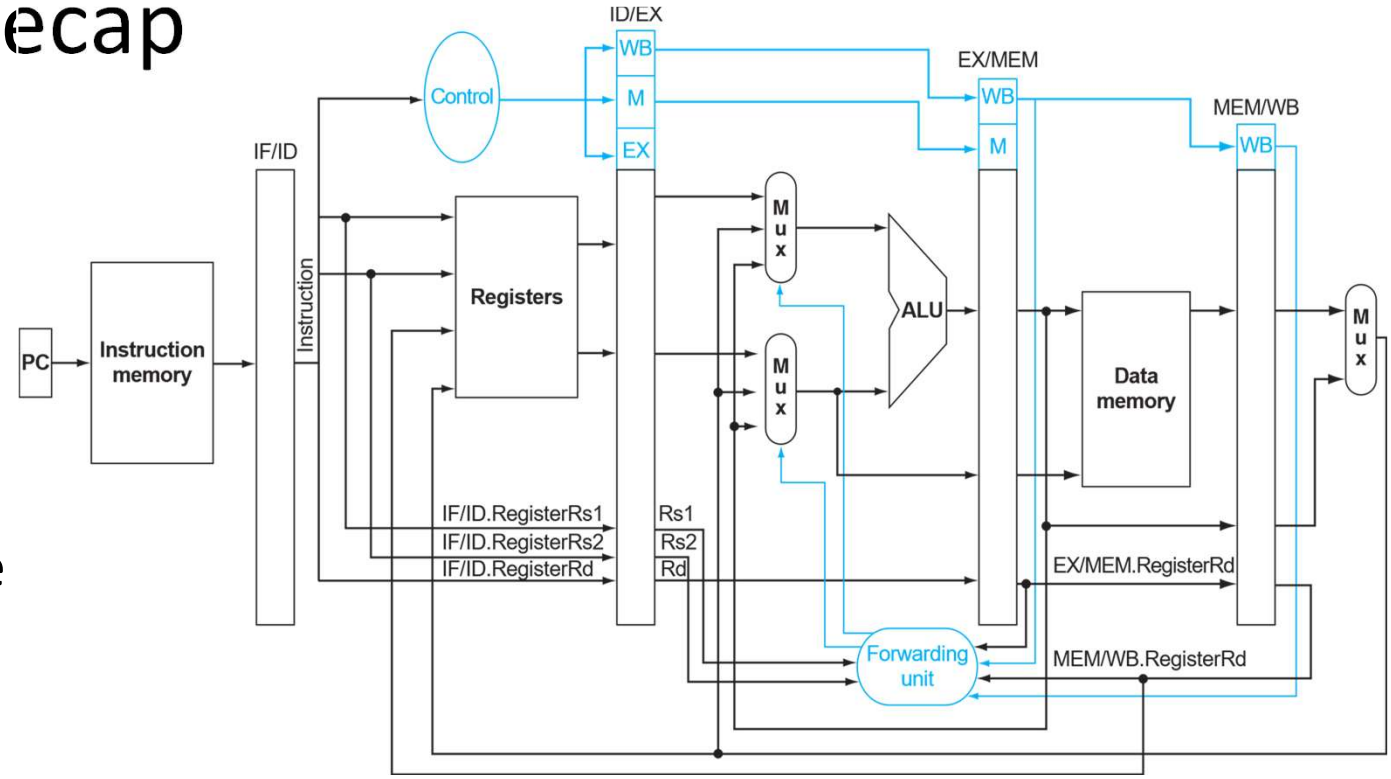

Prerequisite for this session!

Today's session: Advanced acceleration

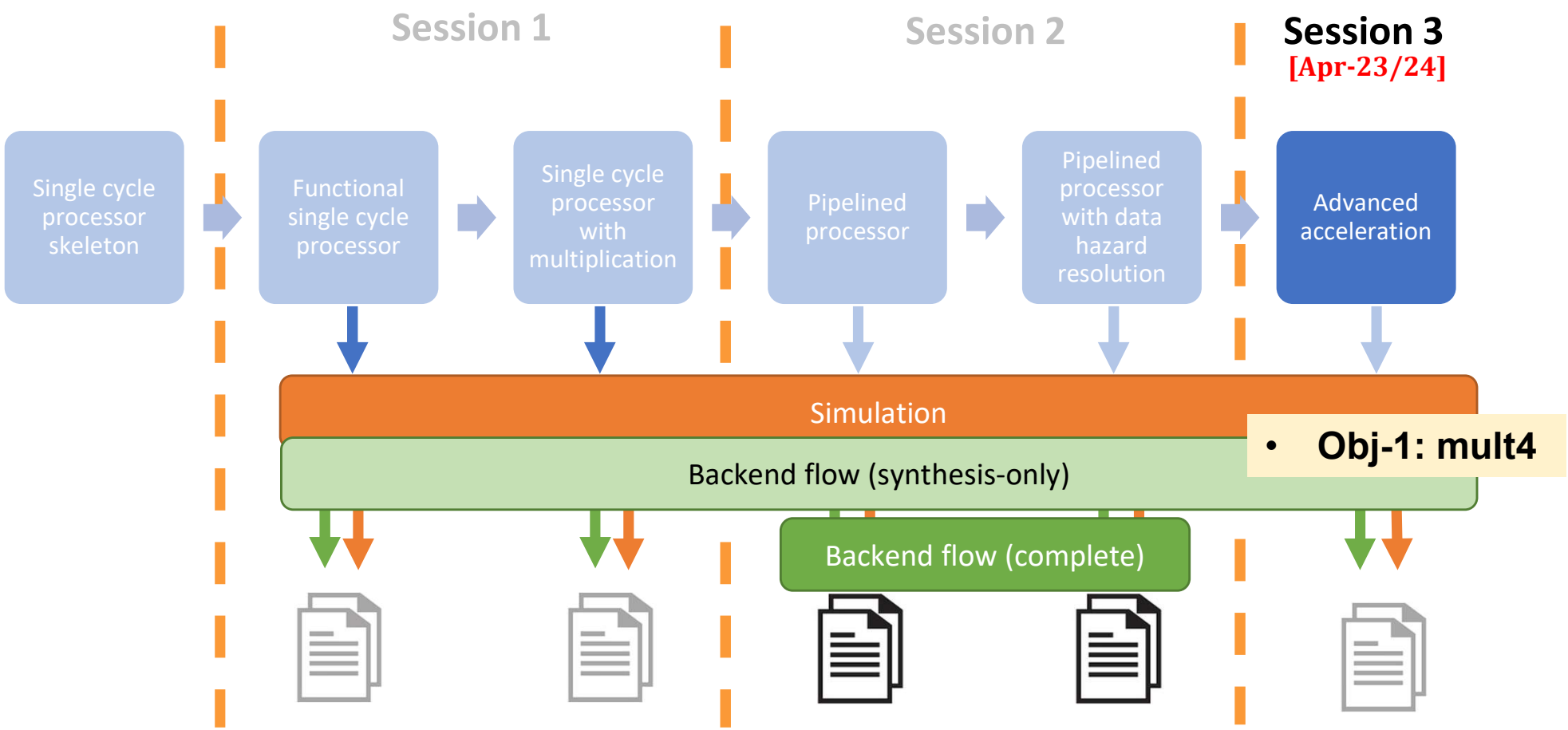

Obj-1: mult4

- Matrix-matrix multiplication (**MULT4**)
  - Input matrices stored in **mult4_dmem_content.txt**
  - Methods
    - i. Add more **RTL** modules
    - ii. Modify the **mult4_imem** program
    - iii. or both …
  - Pass the simulation
  - Synthesize

Testing example: (B = 4 , C = 5, K = 6)

$$\begin{pmatrix} 1 & 2 & 3 & 4 & 5 \\ 6 & 7 & 8 & 9 & 10 \\ 11 & 12 & 13 & 14 & 15 \\ 16 & 17 & 18 & 19 & 20 \end{pmatrix} \cdot \begin{pmatrix} 21 & 26 & 31 & 36 & 41 & 46 \\ 22 & 27 & 32 & 37 & 42 & 47 \\ 23 & 28 & 33 & 38 & 43 & 48 \\ 24 & 29 & 34 & 39 & 44 & 49 \\ 25 & 30 & 35 & 40 & 45 & 50 \end{pmatrix} = \begin{pmatrix} 355 & 430 & 505 & 580 & 655 & 730 \\ 930 & 1130 & 1330 & 1530 & 1730 & 1930 \\ 1505 & 1830 & 2155 & 2480 & 2805 & 3130 \\ 2080 & 2530 & 2980 & 3430 & 3880 & 4330 \end{pmatrix}$$

I[B][C] W[C][K] O[B][K]

Data memory layout:

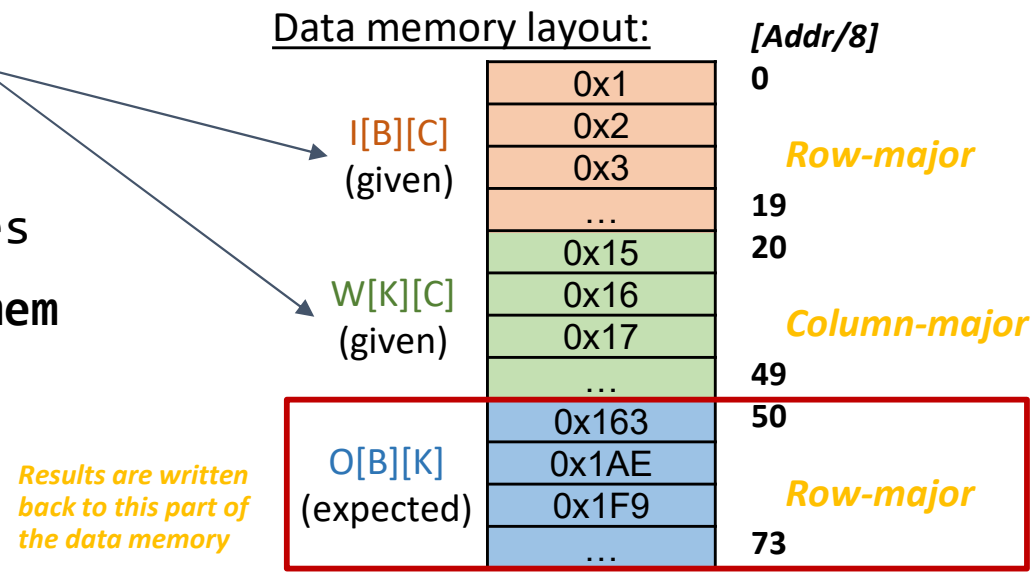

We check on this part!

MULT4: our baseline solution

C code:

```c
int main() {
    int I[4][5];
    int W[5][6];
    int O[4][6];
    int b, k, c;
    for (b = 0; b < 4; b++) {
        for (k = 0; k < 6; k++) {
            for (c = 0; c < 5; c++) {
                O[b][k] += I[b][c] * W[c][k];
            }
        }
    }
}
```

I[B][C]
W[C][K]
O[B][K]

Testing example: (B = 4 , C = 5, K = 6)

$$\begin{pmatrix} 1 & 2 & 3 & 4 & 5 \\ 6 & 7 & 8 & 9 & 10 \\ 11 & 12 & 13 & 14 & 15 \\ 16 & 17 & 18 & 19 & 20 \end{pmatrix} \cdot \begin{pmatrix} 21 & 26 & 31 & 36 & 41 & 46 \\ 22 & 27 & 32 & 37 & 42 & 47 \\ 23 & 28 & 33 & 38 & 43 & 48 \\ 24 & 29 & 34 & 39 & 44 & 49 \\ 25 & 30 & 35 & 40 & 45 & 50 \end{pmatrix} = \begin{pmatrix} 355 & 430 & 505 & 580 & 655 & 730 \\ 930 & 1130 & 1330 & 1530 & 1730 & 1930 \\ 1505 & 1830 & 2155 & 2480 & 2805 & 3130 \\ 2080 & 2530 & 2980 & 3430 & 3880 & 4330 \end{pmatrix}$$

I[B][C] W[C][K] O[B][K]

Required modifications to the processor

- **Full data forwarding logic**
- **Hazard detection unit (control/data hazard)**

RISC-V assembly code

```
addi x25, x0, 0                 # input's address starting point in dmem
addi x26, x0, 160               # weight's address starting point in
dmem
addi x27, x0, 600               # output's address starting point in
dmem
addi x11, x0, 5                 # total C loop size
addi x12, x0, 6                 # total K loop size
addi x13, x0, 4                 # total B loop size
addi x21, x0, 0                 # C loop index starts with 0
addi x22, x0, 0                 # K loop index starts with 0
addi x23, x0, 0                 # B loop index starts with 0

addi x7, x0, 0                  # accumulation result initialization
B_CHECK: beq x23, x13, B_END
K_CHECK: beq x22, x12, K_END
C_CHECK: beq x21, x11, C_END

ld x4, 0(x25)                   # load 1 input data
ld x5, 0(x26)                   # load 1 weight data
mul x6, x4, x5                  # multiply the input with the weight
add x7, x7, x6                  # accumulate the result
addi x21, x21, 1                # C loop index +1
addi x25, x25, 8                # input's 64-bit word address +1
addi x26, x26, 8                # weight's 64-bit word address +1
jal C_CHECK

C_END: addi x21, x0, 0          # C loop index restarts with 0
sd x7, 0(x27)                   # store the output data
addi x7, x0, 0                  # accumulation result reset to 0
addi x22, x22, 1                # K loop index +1
addi x25, x25, -40              # input's 64-bit word address -5
addi x27, x27, 8                # output's 64-bit word address +1
jal K_CHECK

K_END: addi x22, x0, 0          # K loop index restarts with 0
addi x23, x23, 1                # B loop index +1
addi x25, x25, 40               # input's 64-bit word address +5
addi x26, x26, -240             # input's 64-bit word address -30

jal B_CHECK
B_END:
```

I. Full data forwarding logic (Book §4.7)

MULT4:

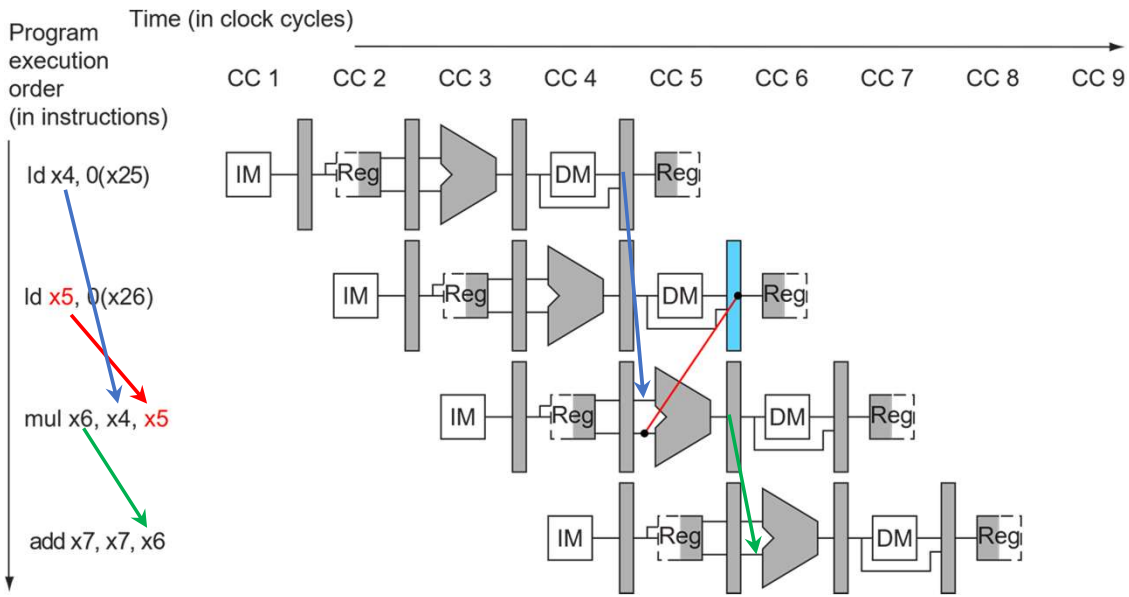


```
addi x25, x0, 0                 # input's address starting point in dmem
addi x26, x0, 160               # weight's address starting point in
dmem
addi x27, x0, 600               # output's address starting point in
dmem
addi x11, x0, 5                 # total C loop size
addi x12, x0, 6                 # total K loop size
addi x13, x0, 4                 # total B loop size
addi x21, x0, 0                 # C loop index starts with 0
addi x22, x0, 0                 # K loop index starts with 0
addi x23, x0, 0                 # B loop index starts with 0

addi x7, x0, 0                  # accumulation result initialization
B_CHECK: beq x23, x13, B_END
K_CHECK: beq x22, x12, K_END
C_CHECK: beq x21, x11, C_END

ld x4, 0(x25)                   # load 1 input data
ld x5, 0(x26)                   # load 1 weight data
mul x6, x4, x5                  # multiply the input with the weight
add x7, x7, x6                  # accumulate the result
addi x21, x21, 1                # C loop index +1
addi x25, x25, 8                # input's 64-bit word address +1
addi x26, x26, 8                # weight's 64-bit word address +1
jal C_CHECK

C_END: addi x21, x0, 0          # C loop index restarts with 0
sd x7, 0(x27)                   # store the output data
addi x7, x0, 0                  # accumulation result reset to 0
addi x22, x22, 1                # K loop index +1
addi x25, x25, -40              # input's 64-bit word address -5
addi x27, x27, 8                # output's 64-bit word address +1
jal K_CHECK

K_END: addi x22, x0, 0          # K loop index restarts with 0
addi x23, x23, 1                # B loop index +1
addi x25, x25, 40               # input's 64-bit word address +5
addi x26, x26, -240             # input's 64-bit word address -30

jal B_CHECK
B_END:
```

I. Full data forwarding logic (Book §4.7)

MULT4:

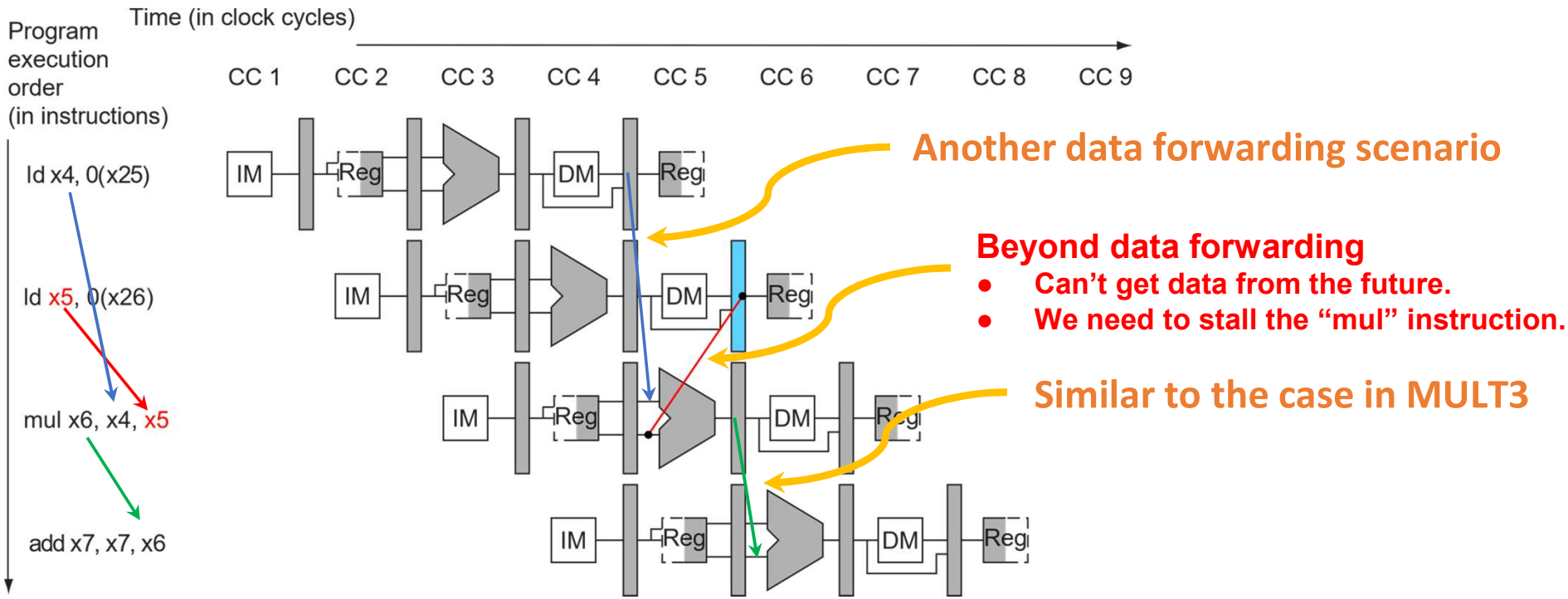

II. Data hazard resolution with stalling

Load and use

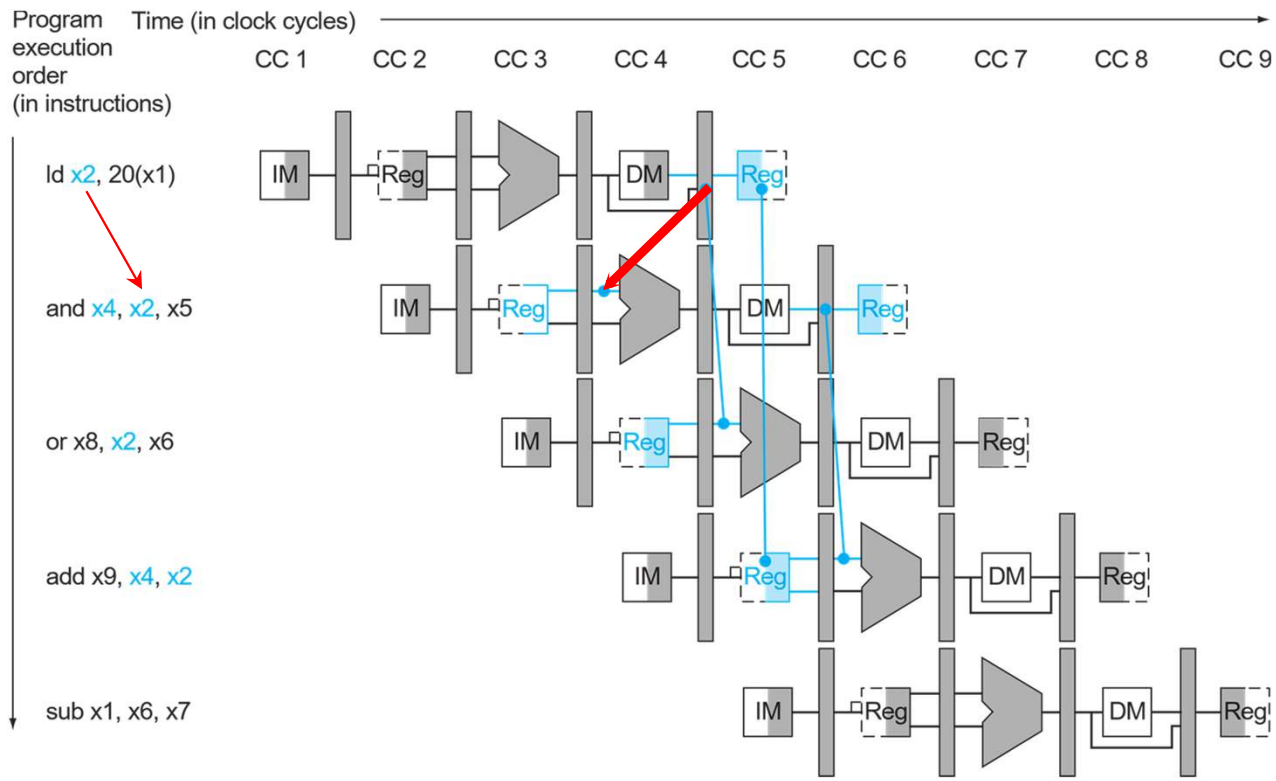

Patterson Book. FIGURE 4.56

II. Data hazard resolution with stalling

Load and use

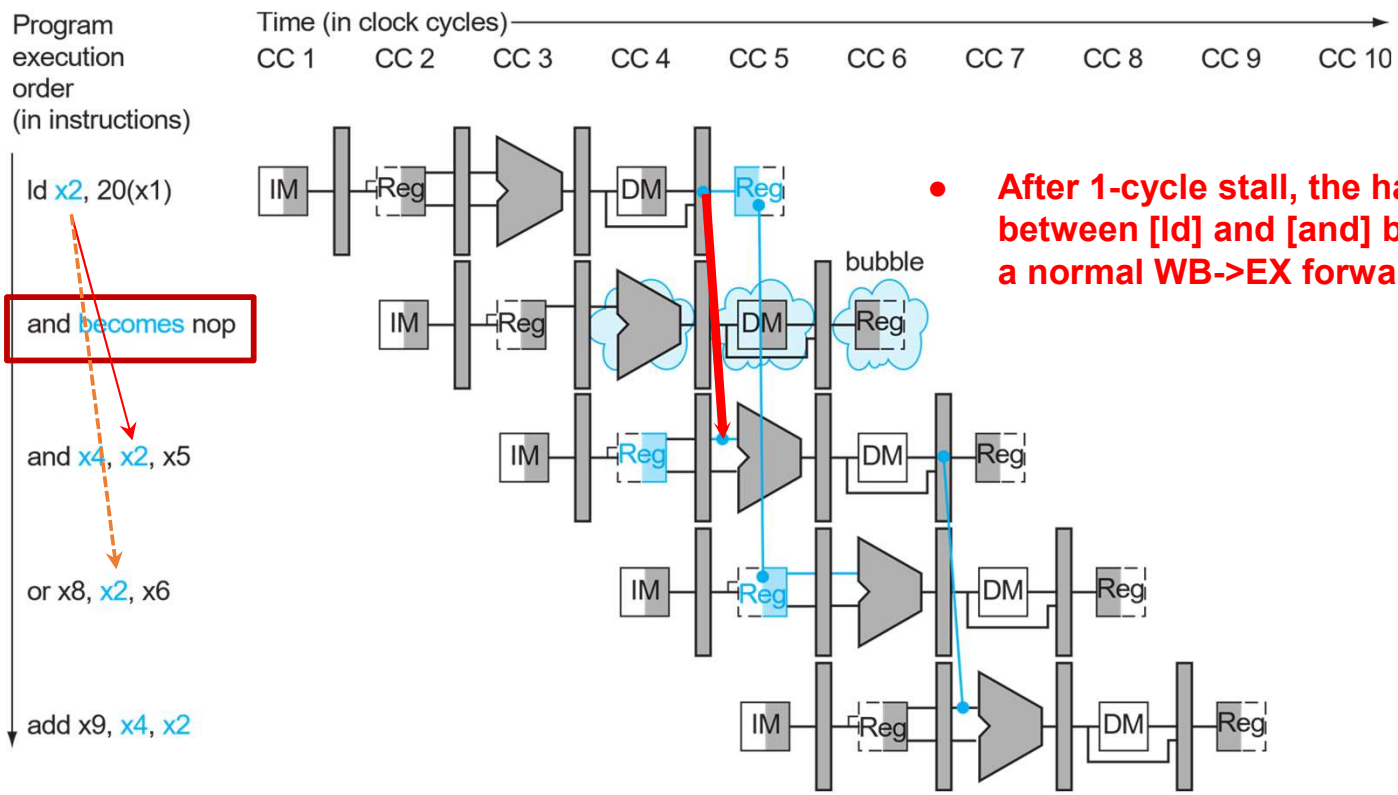

- **After 1-cycle stall, the hazard between [ld] and [and] becomes a normal WB->EX forwarding.**

II. Data hazard resolution with stalling

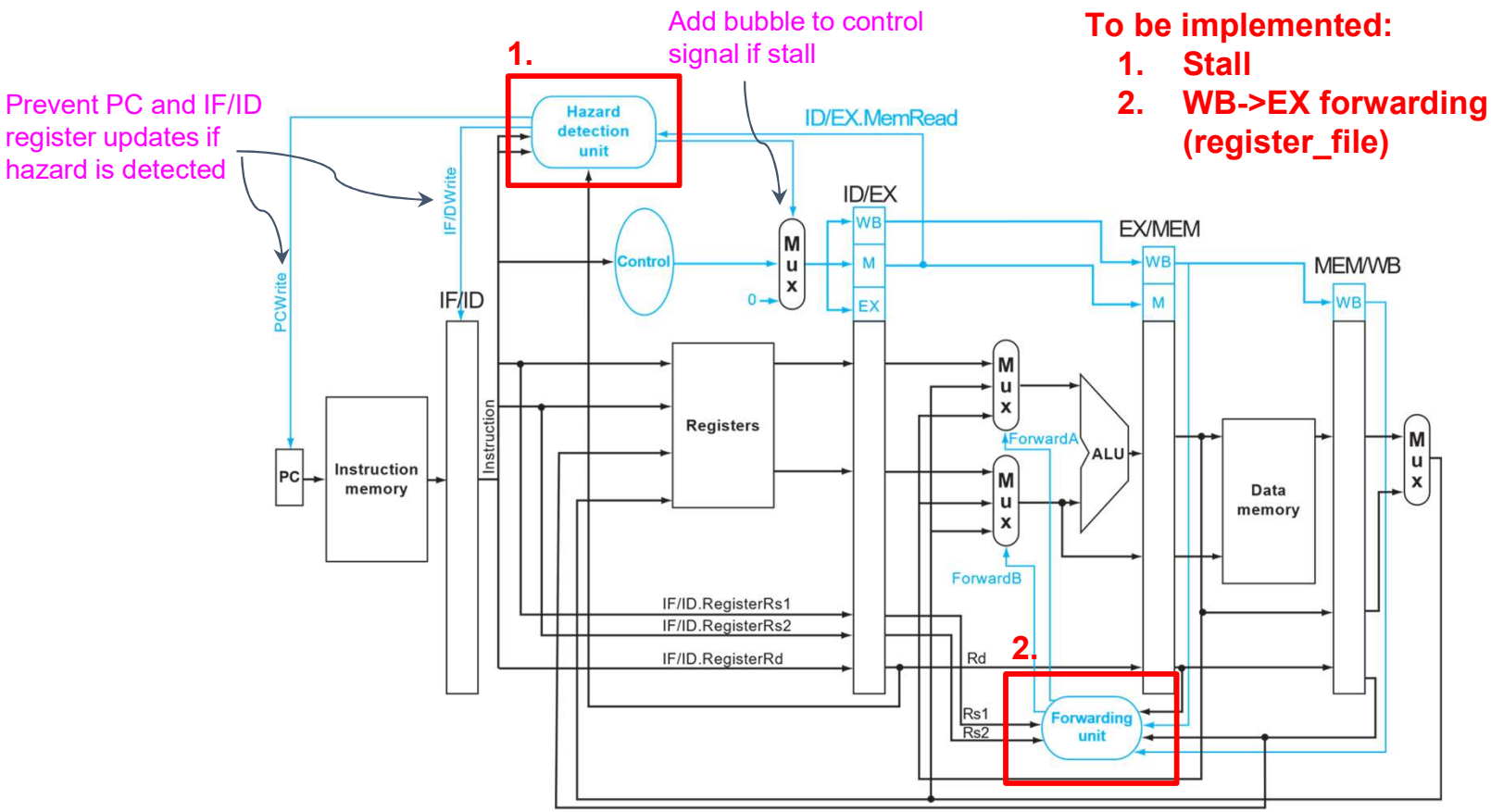

To be implemented:

1. **Stall**
2. **WB->EX forwarding (register_file)**

Patterson Book. FIGURE 4.58

II. Data hazard resolution with stalling

Load and use

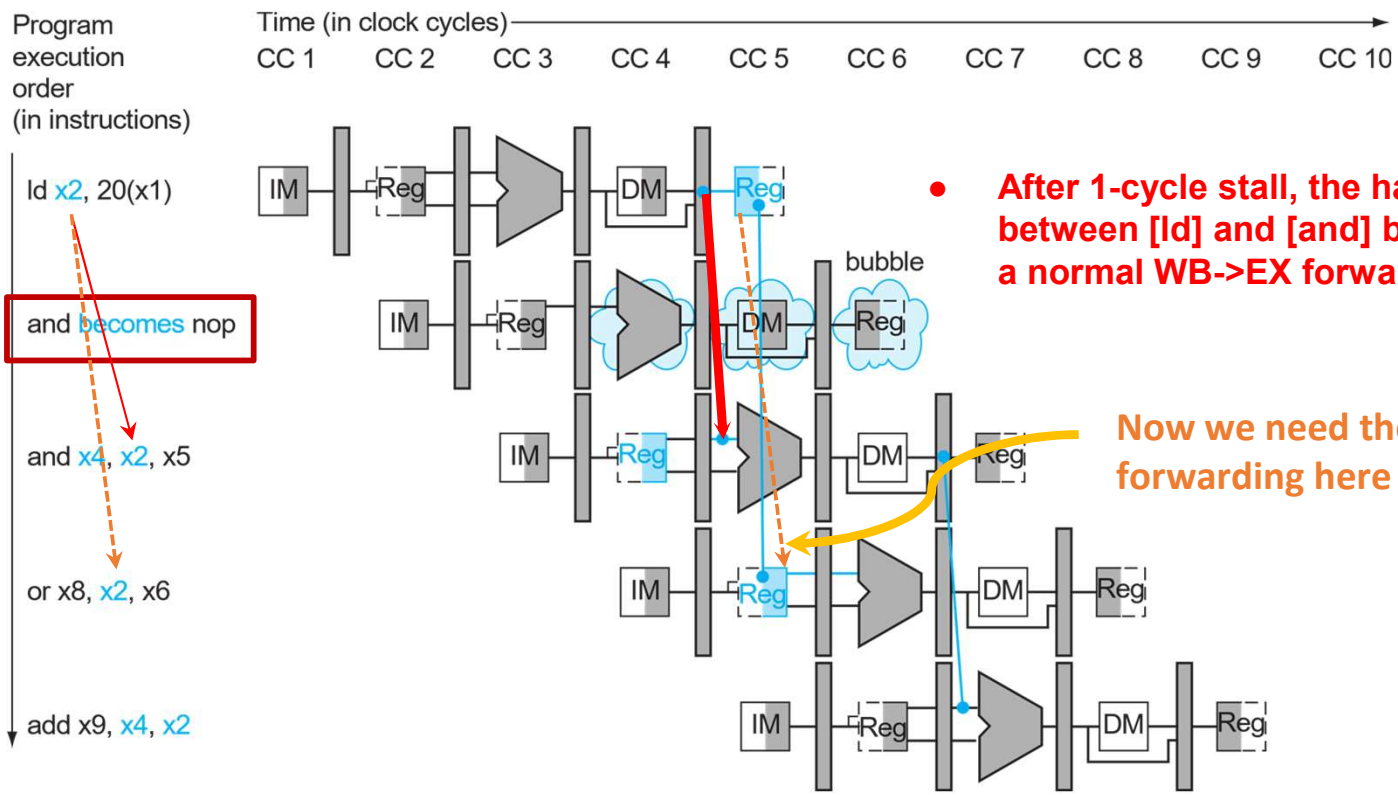

- **After 1-cycle stall, the hazard between [ld] and [and] becomes a normal WB->EX forwarding.**

Now we need the register file forwarding here after stalling.

I. Full data forwarding logic (Book §4.7)

MULT4:

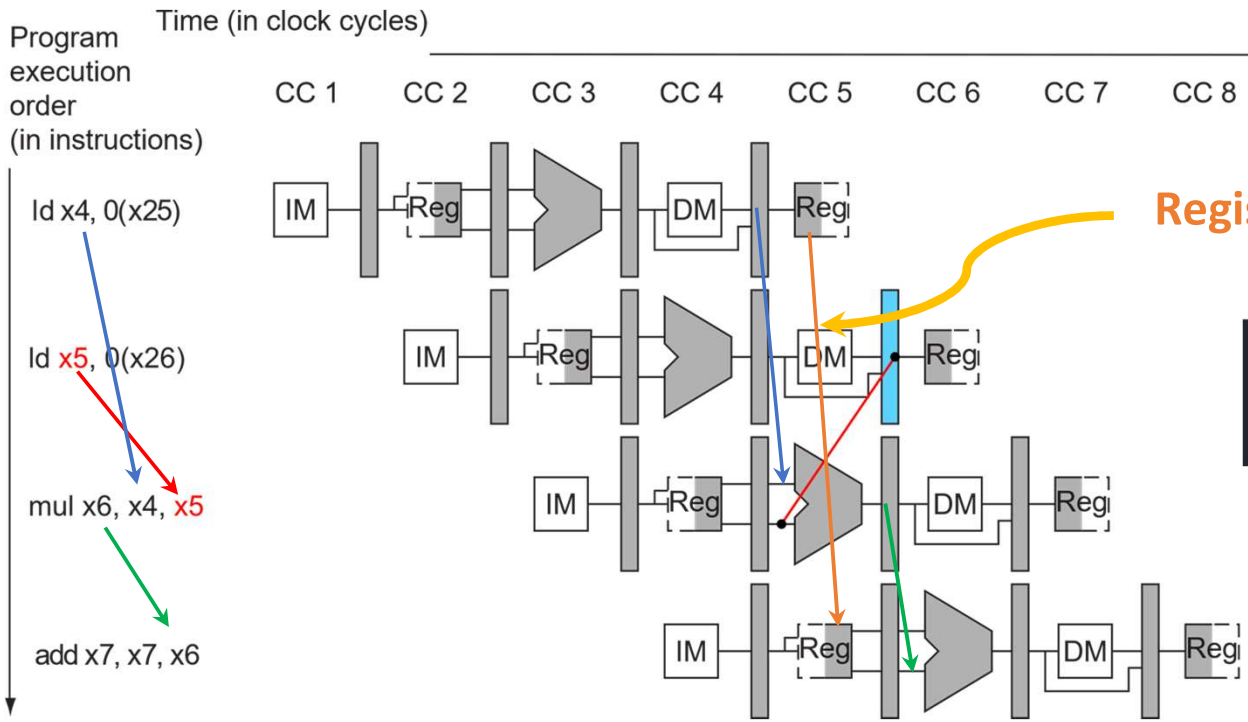

Register file data forwarding

Modify the register_file.v

```
always@(*) begin
        rdata_1 = reg_array[raddr_1];
        rdata_2 = reg_array[raddr_2];
end
```

Think:
In which case should you forward the **wdata** to **rdata**?

III. Control Hazard solution (Book §4.8)

Control Hazard:

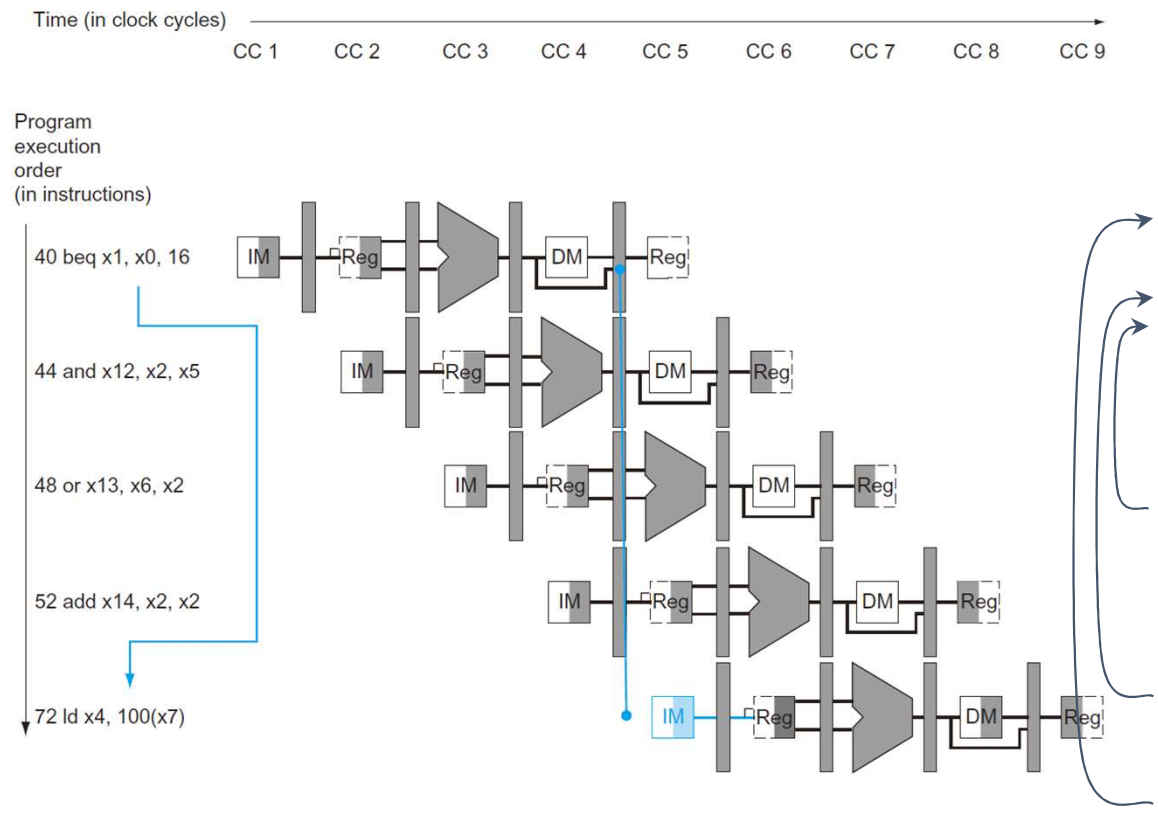


```
addi x25, x0, 0                 # input's address starting point in dmem
addi x26, x0, 160               # weight's address starting point in
dmem
addi x27, x0, 600               # output's address starting point in
dmem
addi x11, x0, 5                 # total C loop size
addi x12, x0, 6                 # total K loop size
addi x13, x0, 4                 # total B loop size
addi x21, x0, 0                 # C loop index starts with 0
addi x22, x0, 0                 # K loop index starts with 0
addi x23, x0, 0                 # B loop index starts with 0

addi x7, x0, 0                  # accumulation result initialization
B_CHECK: beq x23, x13, B_END
K_CHECK: beq x22, x12, K_END
C_CHECK: beq x21, x11, C_END

ld x4, 0(x25)                   # load 1 input data
ld x5, 0(x26)                   # load 1 weight data
mul x6, x4, x5                  # multiply the input with the weight
add x7, x7, x6                  # accumulate the result
addi x21, x21, 1                # C loop index +1
addi x25, x25, 8                # input's 64-bit word address +1
addi x26, x26, 8                # weight's 64-bit word address +1
jal C_CHECK

C_END: addi x21, x0, 0          # C loop index restarts with 0
sd x7, 0(x27)                   # store the output data
addi x7, x0, 0                  # accumulation result reset to 0
addi x22, x22, 1                # K loop index +1
addi x25, x25, -40              # input's 64-bit word address -5
addi x27, x27, 8                # output's 64-bit word address +1
jal K_CHECK

K_END: addi x22, x0, 0          # K loop index restarts with 0
addi x23, x23, 1                # B loop index +1
addi x25, x25, 40               # input's 64-bit word address +5
addi x26, x26, -240             # input's 64-bit word address -30

jal B_CHECK
B_END:
```

III. Control Hazard solution (Book §4.8)

- We missed our Branch Unit!
  - Not used in MULT2 & MULT3
  - But will be useful here for
    - **BR** instruction
    - **JAL** instruction
  - Which pipeline should we put it to?
    - What is its input?
    - How is the data computed?
    - Who is using its output?

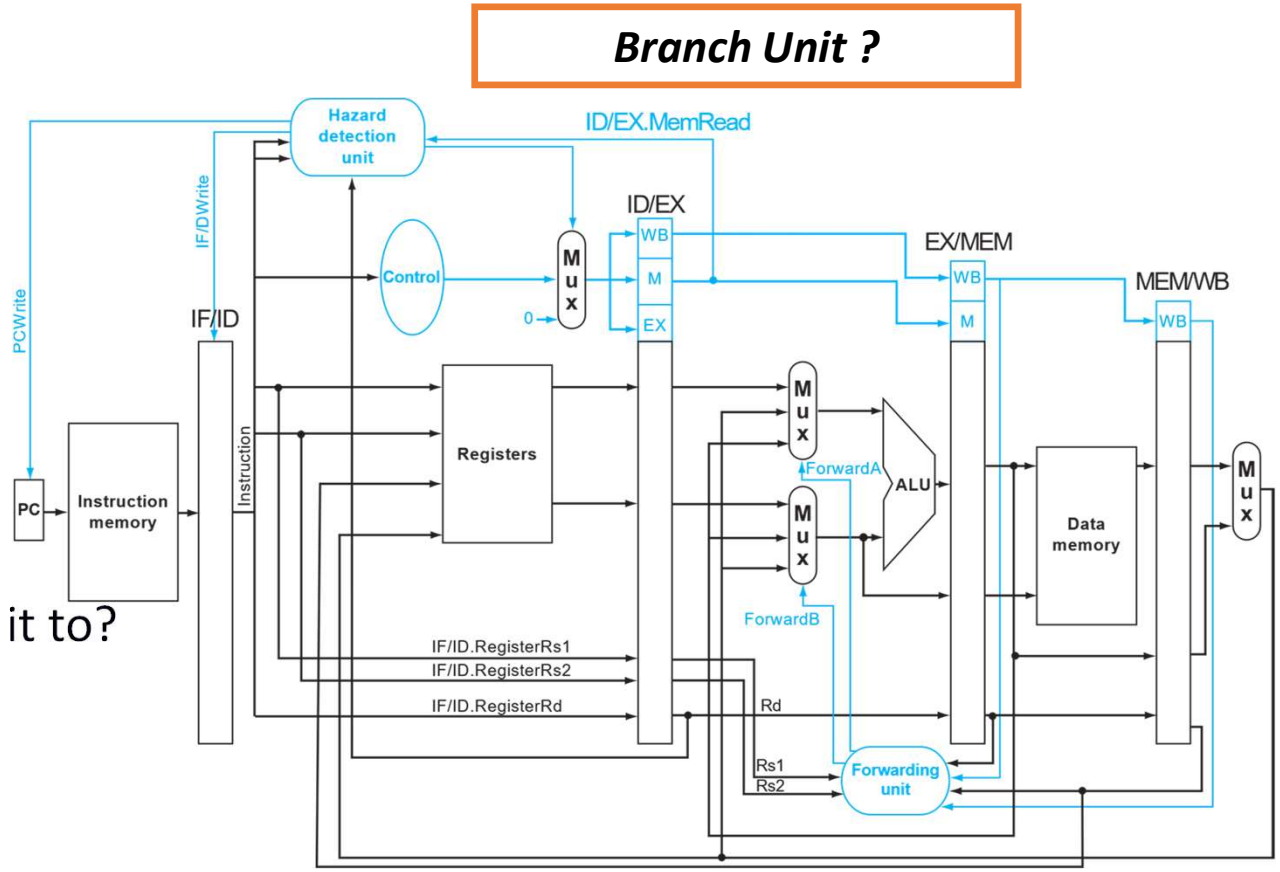

III. Control Hazard solution (Book §4.8)

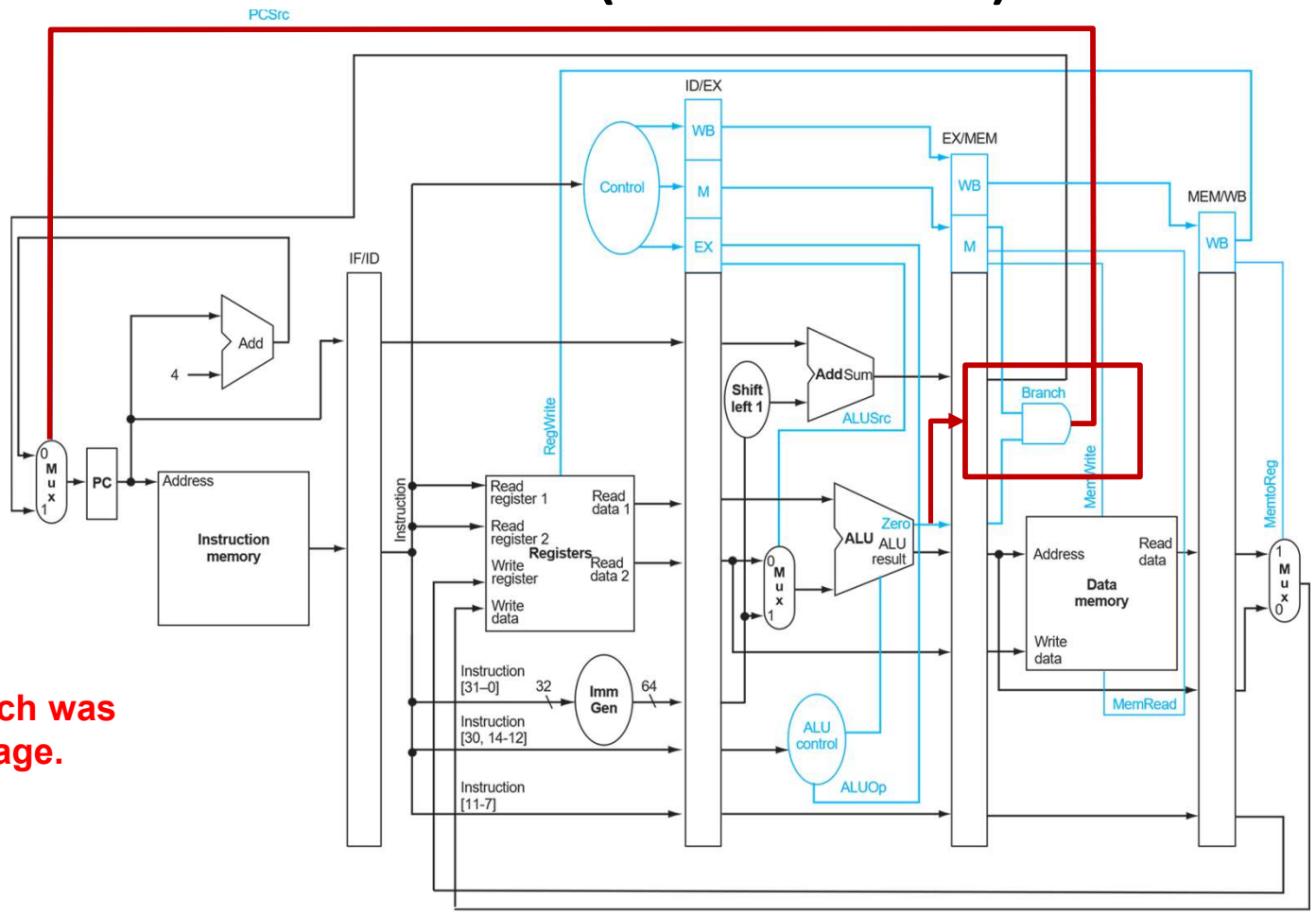

Patterson Book. FIGURE 4.49

Recall §4.6:

- **We know if the branch was taken at the MEM stage.**

III. Control Hazard solution (Book §4.8)

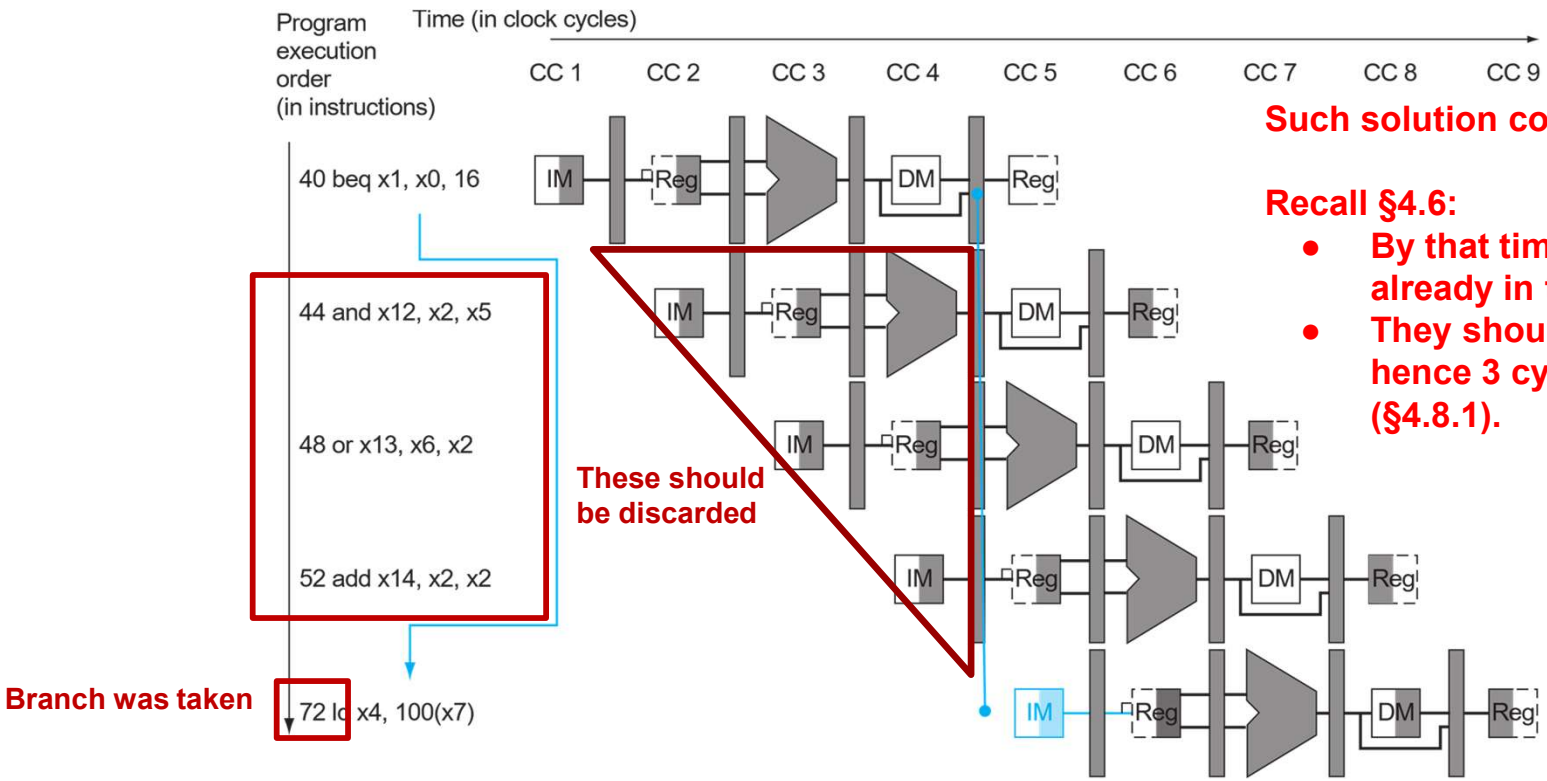

Such solution comes at a cost…

Recall §4.6:

- **By that time, 3 instructions are already in the pipeline.**
- **They should be discarded, hence 3 cycles are wasted (§4.8.1).**

Control Hazard - Our baseline

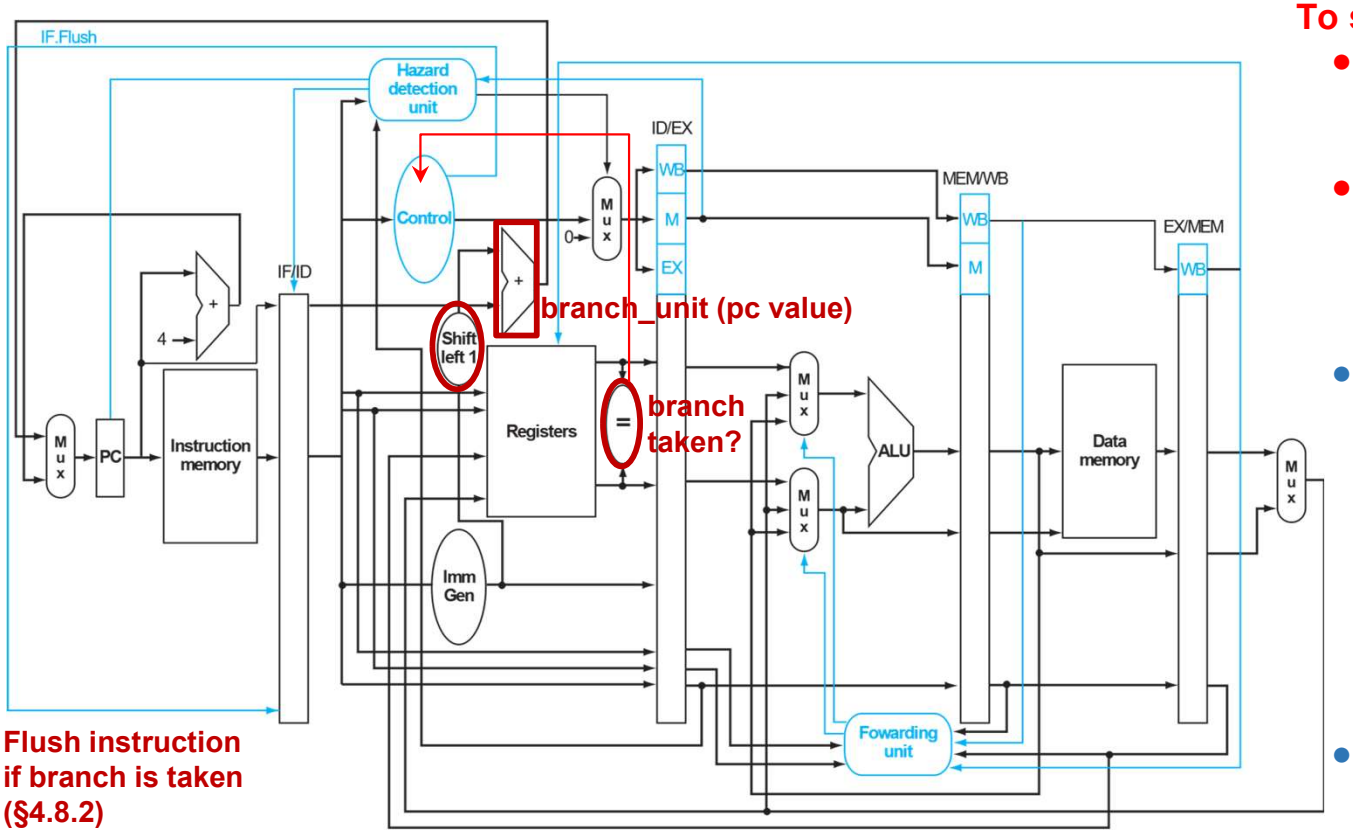

Flush instruction if branch is taken (§4.8.2)

Patterson Book. FIGURE 4.62

To save this overhead:

- **Make branch/jump decision *ASAP* (at the ID stage, §4.8.2).**
- **This is our baseline architecture for MULT4 (in terms of saving the total cycle amount).**
- **We still use the branch-not-taken prediction (in our baseline).**
  a. **ID judges the branch/jump.**
  b. **IF basically fetches imem[PC+4].**
  c. **If branch-taken/jump, next PC is overwritten and the false IF instruction is flushed before next clock edge comes.**
- **Feel free to use different prediction scheme if you find it valuable(§4.8.3).**

IV. PLAN B – hazards can be solved with nop insertion

Recall **MULT2**, the software solution.

[Fail-Safe] If the deadline is right ahead, at least make your processor functional on MULT4!

```
addi x25, x0, 0                 # input's address starting point in dmem
addi x26, x0, 160               # weight's address starting point in dmem
addi x27, x0, 600               # output's address starting point in dmem
addi x11, x0, 5                 # total C loop size
addi x12, x0, 6                 # total K loop size
addi x13, x0, 4                 # total B loop size
addi x21, x0, 0                 # C loop index starts with 0
addi x22, x0, 0                 # K loop index starts with 0
addi x23, x0, 0                 # B loop index starts with 0

addi x7, x0, 0                  # accumulation result initialization
B_CHECK: beq x23, x13, B_END
nop
nop
nop
K_CHECK: beq x22, x12, K_END
nop
nop
nop
C_CHECK: beq x21, x11, C_END
nop
nop
nop
```

- **Don't just copy and paste this one!**
- **Understand your architecture and insert the necessary nops.**
- **Hazard control and nop insertion are related**
  - **The better hazard control logic you have,**
  - **The fewer nops you will need,**
  - **The better performance you will achieve.**

Understand the program, locate the hazard, understand your design, upgrade the imem…

```
ld x4, 0(x25)                   # load 1 input data
ld x5, 0(x26)                   # load 1 weight data
nop
mul x6, x4, x5                  # multiply the input with the weight
add x7, x7, x6                  # accumulate the result
addi x21, x21, 1                # C loop index +1
addi x25, x25, 8                # input's 64-bit word address +1
addi x26, x26, 8                # weight's 64-bit word address +1
jal C_CHECK
nop
nop
nop

C_END: addi x21, x0, 0          # C loop index restarts with 0
sd x7, 0(x27)                   # store the output data
addi x7, x0, 0                  # accumulation result reset to 0
addi x22, x22, 1                # K loop index +1
addi x25, x25, -40              # input's 64-bit word address -5
addi x27, x27, 8                # output's 64-bit word address +1
jal K_CHECK
nop
nop
nop

K_END: addi x22, x0, 0          # K loop index restarts with 0
addi x23, x23, 1                # B loop index +1
addi x25, x25, 40               # input's 64-bit word address +5
addi x26, x26, -240             # input's 64-bit word address -30

jal B_CHECK
nop
nop
nop
B_END:
```

IV. PLAN B – hazards can be solved with nop insertion

- **Whenever you change the program, DO NOT FORGET to regenerate the machine code (imem_content)!**
- **Make use of the online tool we mentioned in session-1 (link-online-converter, link-github).**

1. Paste your assembly code in Editor.

Venus | Editor | Simulator

```
1 ld x4, 0(x25)
2 ld x5, 0(x26)
3 nop
4 mul x6, x4, x5
5 add x7, x7, x6
6
```

2. Go to Simulator and click the Green button.

Venus | Editor | Simulator | Chocopy

Assemble & Simulate from Editor | Cancel

PC	Machine Code	Basic Code	Original Code
0x0	0x000CB203	ld x4 0(x25)	ld x4, 0(x25)
0x4	0x000D3283	ld x5 0(x26)	ld x5, 0(x26)
0x8	0x00000013	addi x0 x0 0	nop
0xc	0x02520333	mul x6 x4 x5	mul x6, x4, x5
0x10	0x006383B3	add x7 x7 x6	add x7, x7, x6

3. Upgrade the imem_content (remove "0x"!).
4. Never forget to add the finishing lines. 👇

```
FA9FF0EF // jal B_CHECK
00000013
00000013
00000013
00000013
4000007E // STOP instruction mult4
```

Today's session: task summary

With **session_guide.pdf**

- Study the RUN CYCLE-ACCURATE SIMULATION and RUN BACKEND FLOW
- Follow the TASKS TO BE DONE and fill in the **report.docx**

Copy-paste your finished **/RTL/*.v** into the SOLUTION folders.

- **Obj-1** → **RTL_SOLUTION5_pipeline_hazard_advanced_MULT4**

- **Note:**

1. We use universal test patterns for fair grading.
2. **Do not modify cpu_tb.v & sky130_sram_2rw.v**
3. **Do not modify mult4_dmem_content.txt**
4. **This time you can modify mult4_imem_content.txt**

Be creative

- Useful resources to make it go faster!
  - Patterson Book. End of section 4.8 on branch prediction tricks.
  - Patterson Book. From Section 4.10 on advanced acceleration tricks.
  - RISC-V specification. Chapter 17 on the "V" Standard Extension for Vector Operations

Grading	
ITEM	Points
Functional pipelined MULT2	0.25
Functional pipelined MULT3	0.25
Functional MULT4	0.25
Advanced MULT4 #cycles <= baseline imp. (1636 cc)	0.25
Report	1.0
Total	2.0

Project handover

Deadline: **1st May**