BTB connector on accessible face

P100A

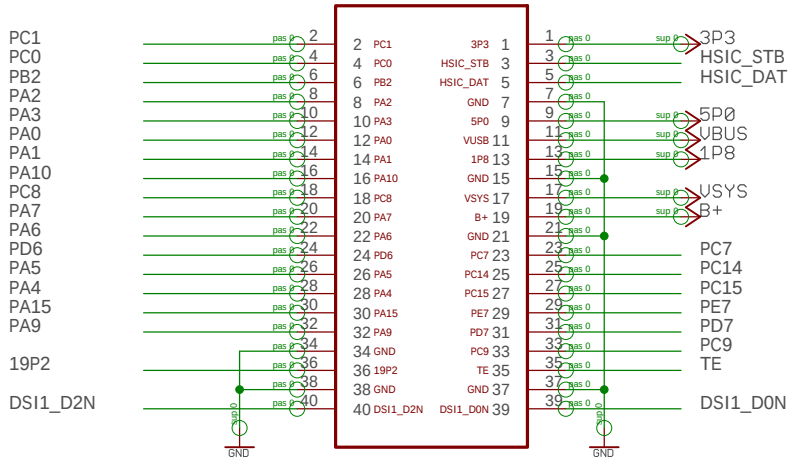

NM

BTB connector on accessible face

P102A

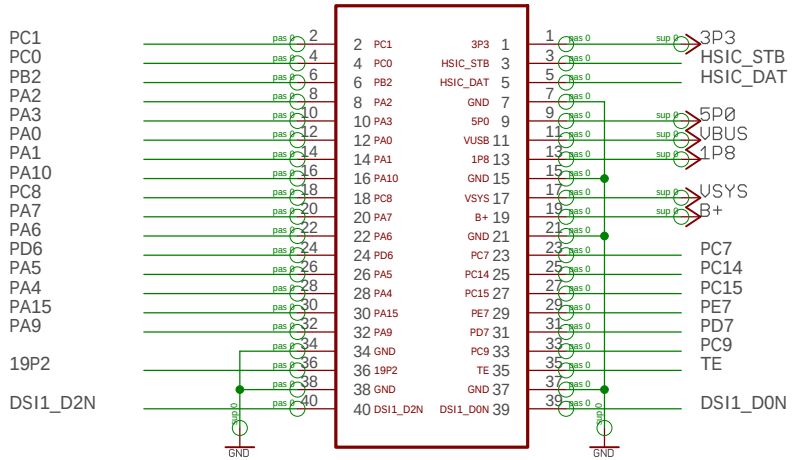

ASP-193073-01

P100B

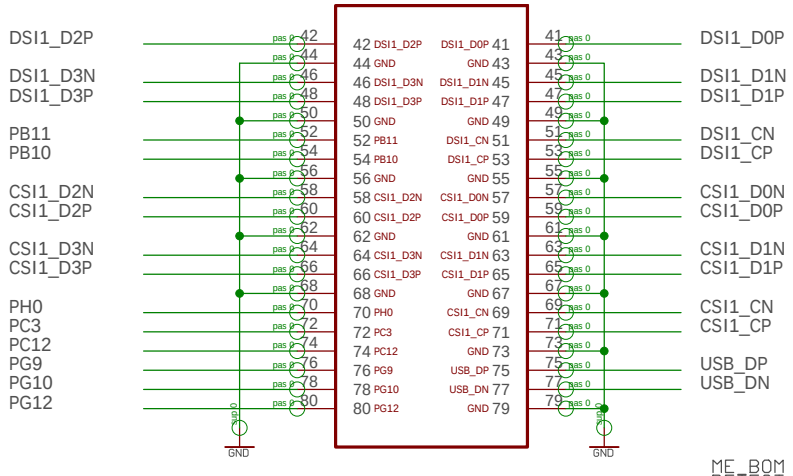

NM

P102B

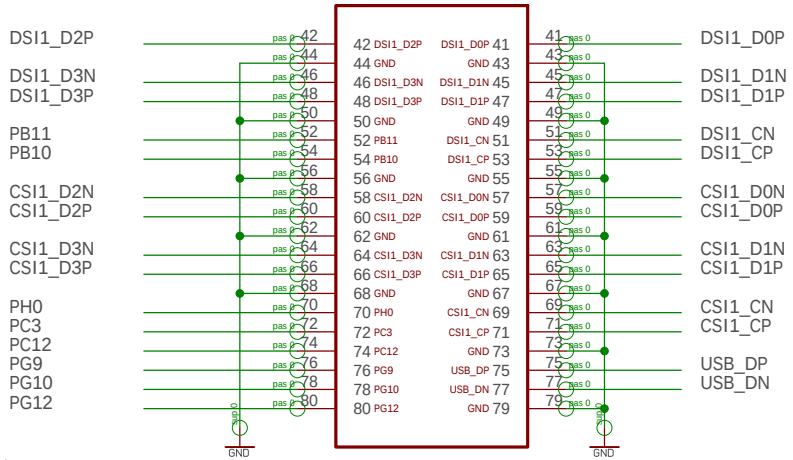

ASP-193073-01

ME_BOM
DETECT_1

ME_BOM
DETECT_2

Power good indication

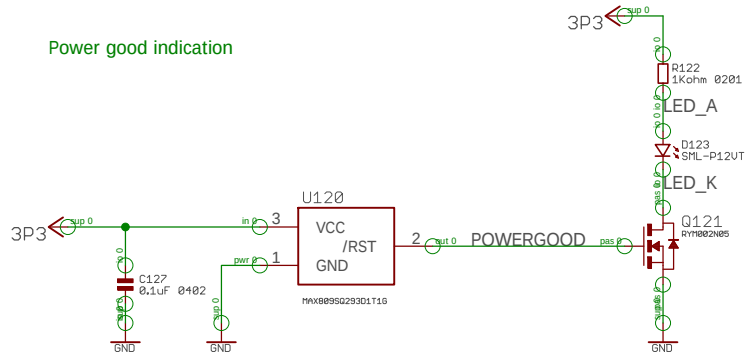

Design ID

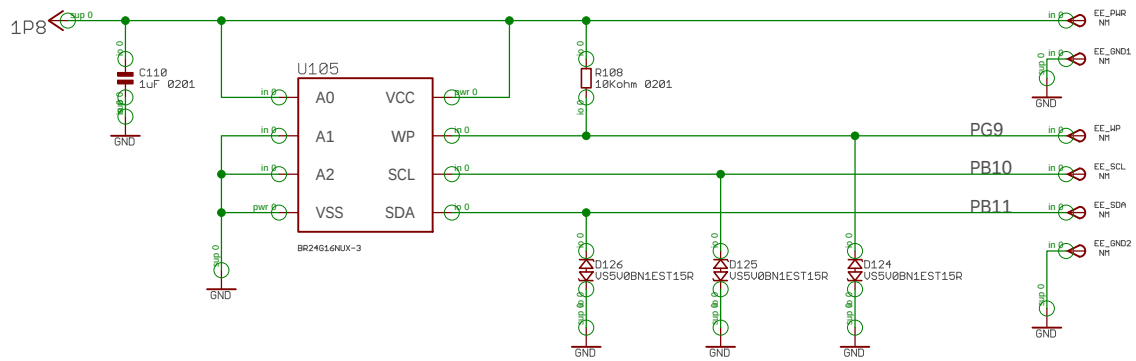

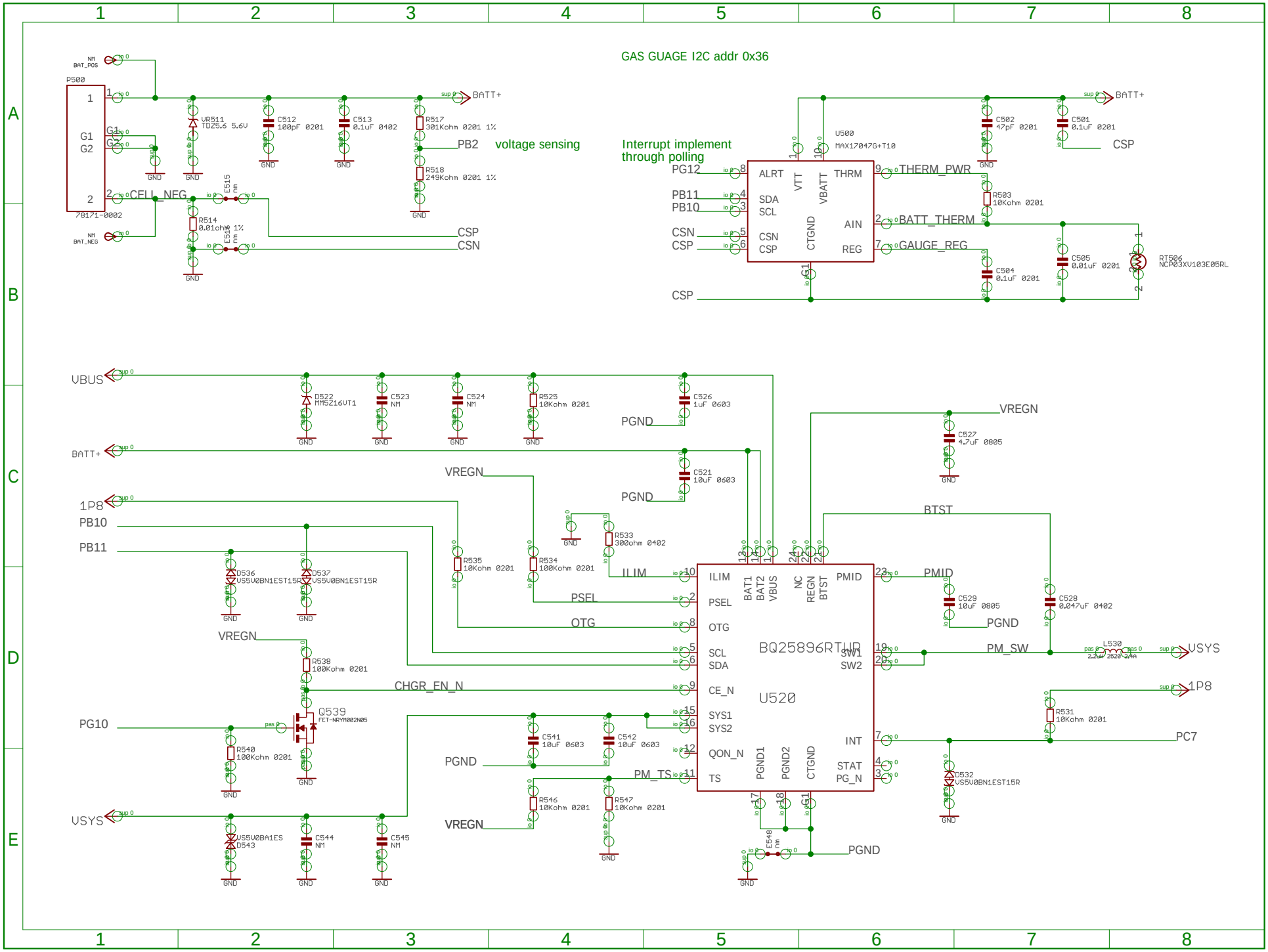
GAS GUAGE I2C addr 0x36
Interrupt implement through polling
voltage sensing
P500
78171-0002
BAT_POS
BAT_NEG
BATT+
PB2
CELL_NEG
CSP
CSN
U500
MAX17047G+T10
ALRT
SDA
SCL
CSN
CSP
VTT
VBATT
CTGND
THRM
AIN
REG
THERM_PWR
BATT_THERM
GAUGE_REG
RT506
NCP03XV103E05RL
VBUS
PGND
VREGN
1P8
PB10
PB11
BTST
ILIM
PSEL
OTG
SCL
SDA
CE_N
SYS1
SYS2
QON_N
TS
BAT1
BAT2
VBUS
NC
REGN
BTST
PMID
SW1
SW2
INT
STAT
PG_N
PGND1
PGND2
CTGND
BQ25896RTWR
U520
PM_SW
VSYS
CHGR_EN_N
PG10
Q539
PC7
PM_TS