BTB connector on accessible face

P100A

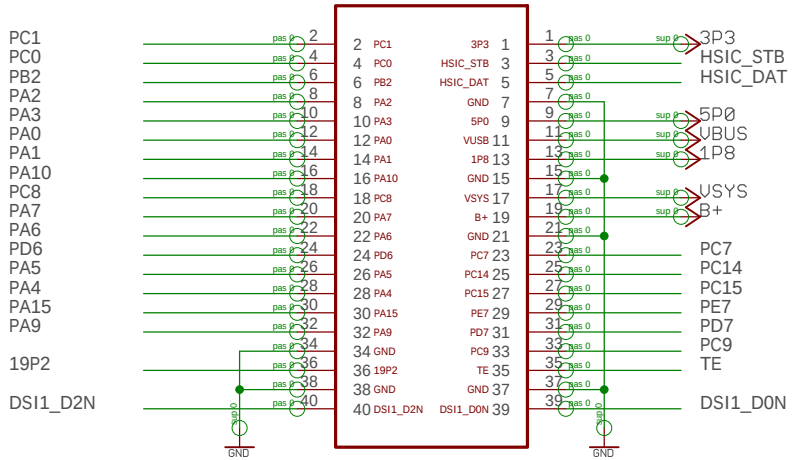

NM

BTB connector on accessible face

P102A

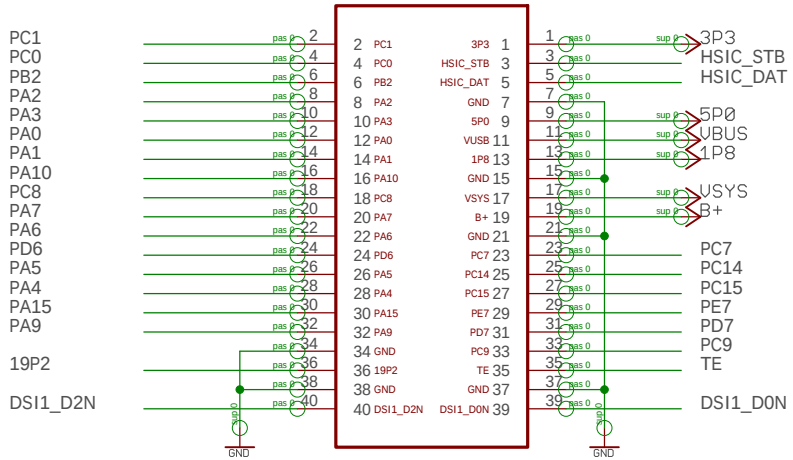

ASP-193073-01

P100B

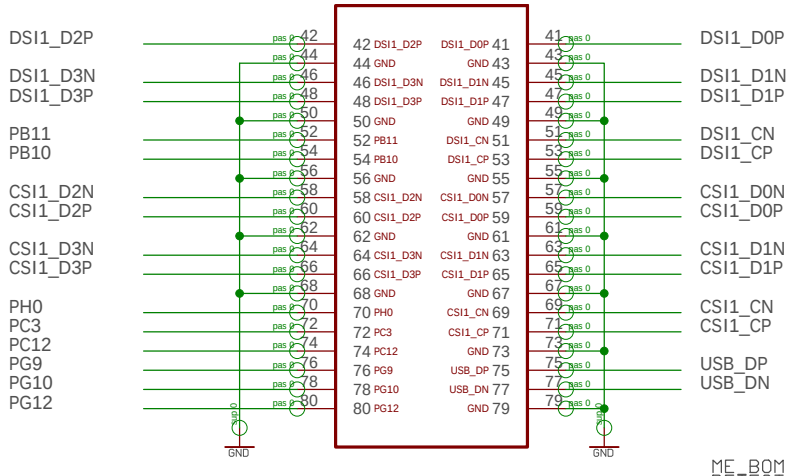

NM

P102B

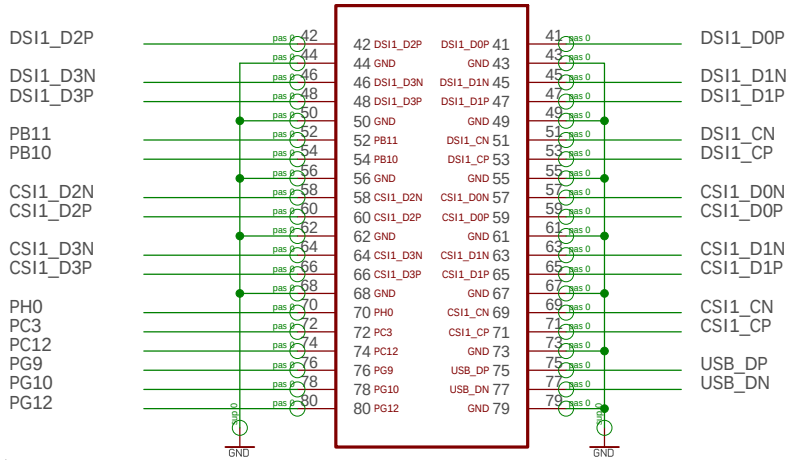

ASP-193073-01

ME_BOM
DETECT_1

ME_BOM
DETECT_2

Power good indication

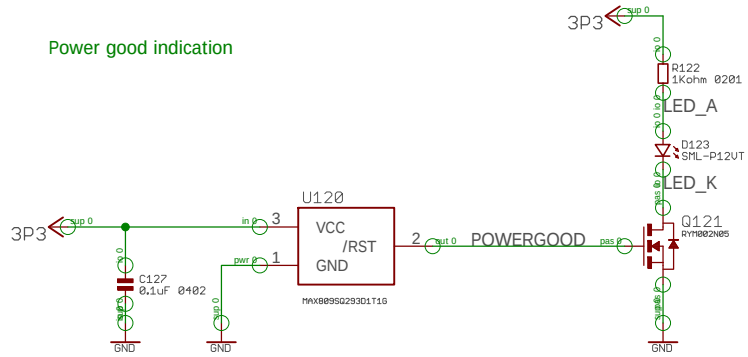

Design ID

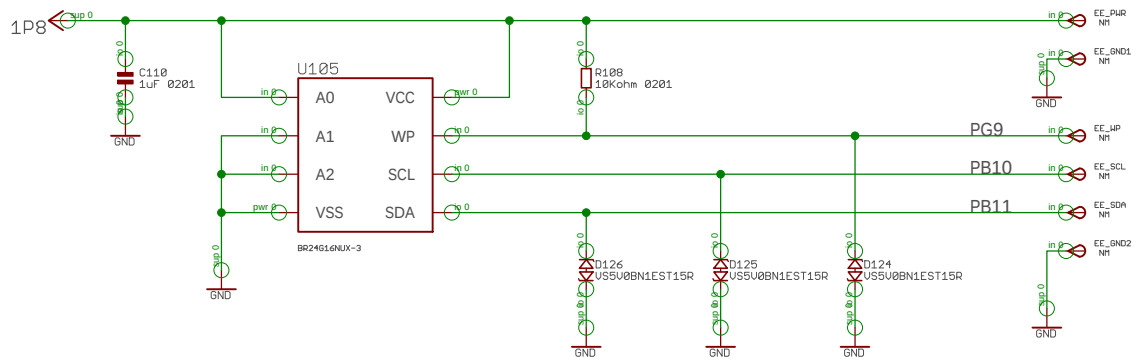

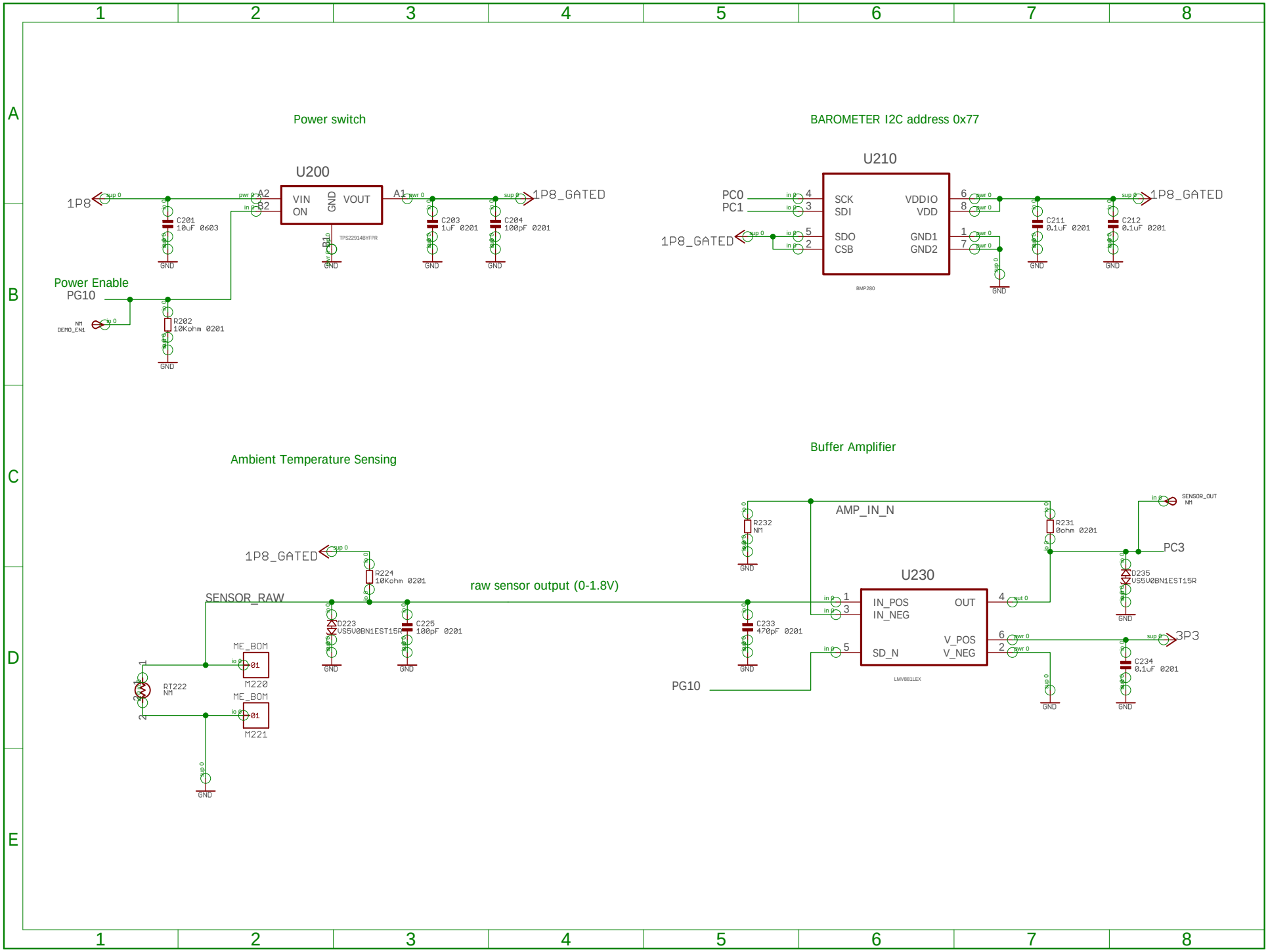
Power switch
U200
1P8
VIN
ON
GND
VOUT
A2
B2
A1
B1
TPS22914BYFPR
C201
10uF 0603
C203
1uF 0201
C204
100pF 0201
1P8_GATED
Power Enable
PG10
R202
10Kohm 0201
NM
DEMO_EN1
GND
BAROMETER I2C address 0x77
U210
PC0
PC1
1P8_GATED
SCK
SDI
SDO
CSB
VDDIO
VDD
GND1
GND2
BMP280
C211
0.1uF 0201
C212
0.1uF 0201
Ambient Temperature Sensing
1P8_GATED
R224
10Kohm 0201
SENSOR_RAW
D223
VS5V0BN1EST15R
C225
100pF 0201
raw sensor output (0-1.8V)
ME_BOM
M220
M221
RT222
NM
Buffer Amplifier
AMP_IN_N
R232
NM
R231
0ohm 0201
SENSOR_OUT
NM
PC3
D235
VS5V0BN1EST15R
U230
IN_POS
IN_NEG
SD_N
OUT
V_POS
V_NEG
LMV881LEX
C233
470pF 0201
PG10
3P3
C234
0.1uF 0201