BTB connector on accessible face

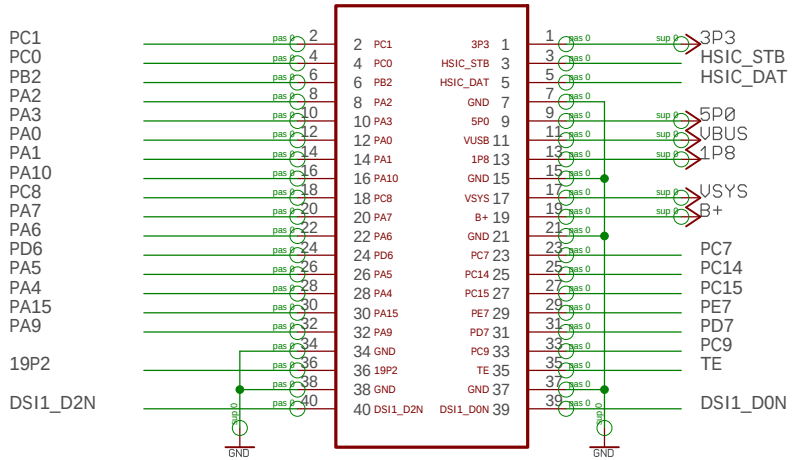

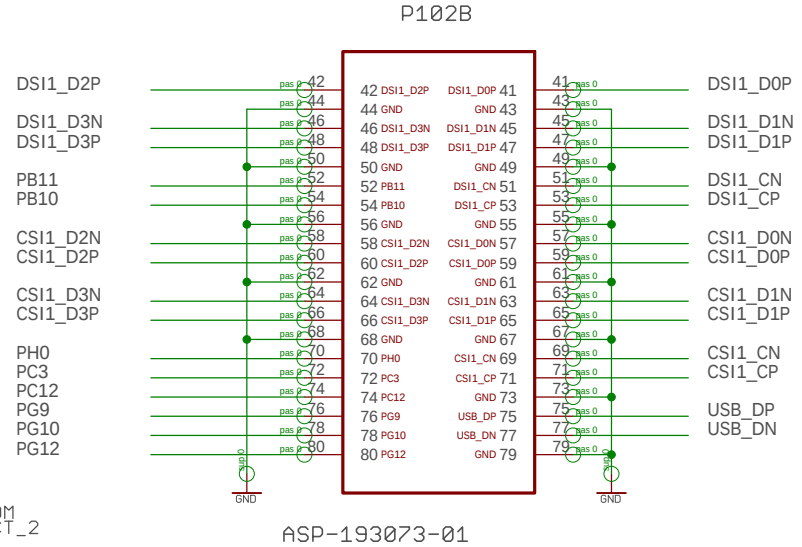

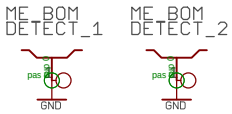

Power good indication

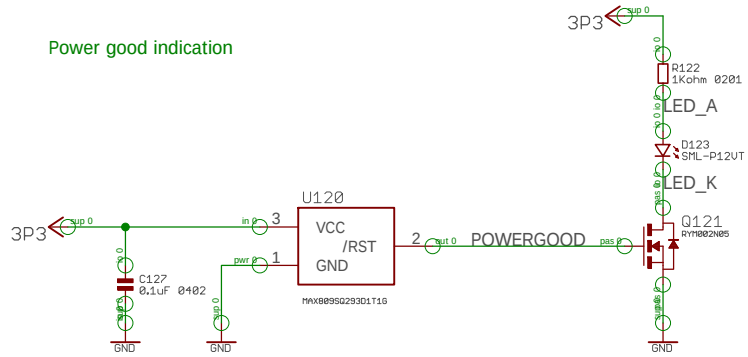

Design ID

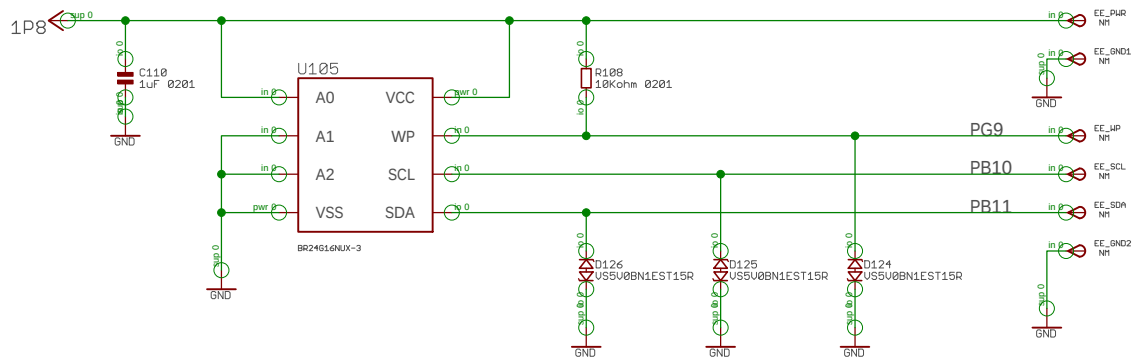

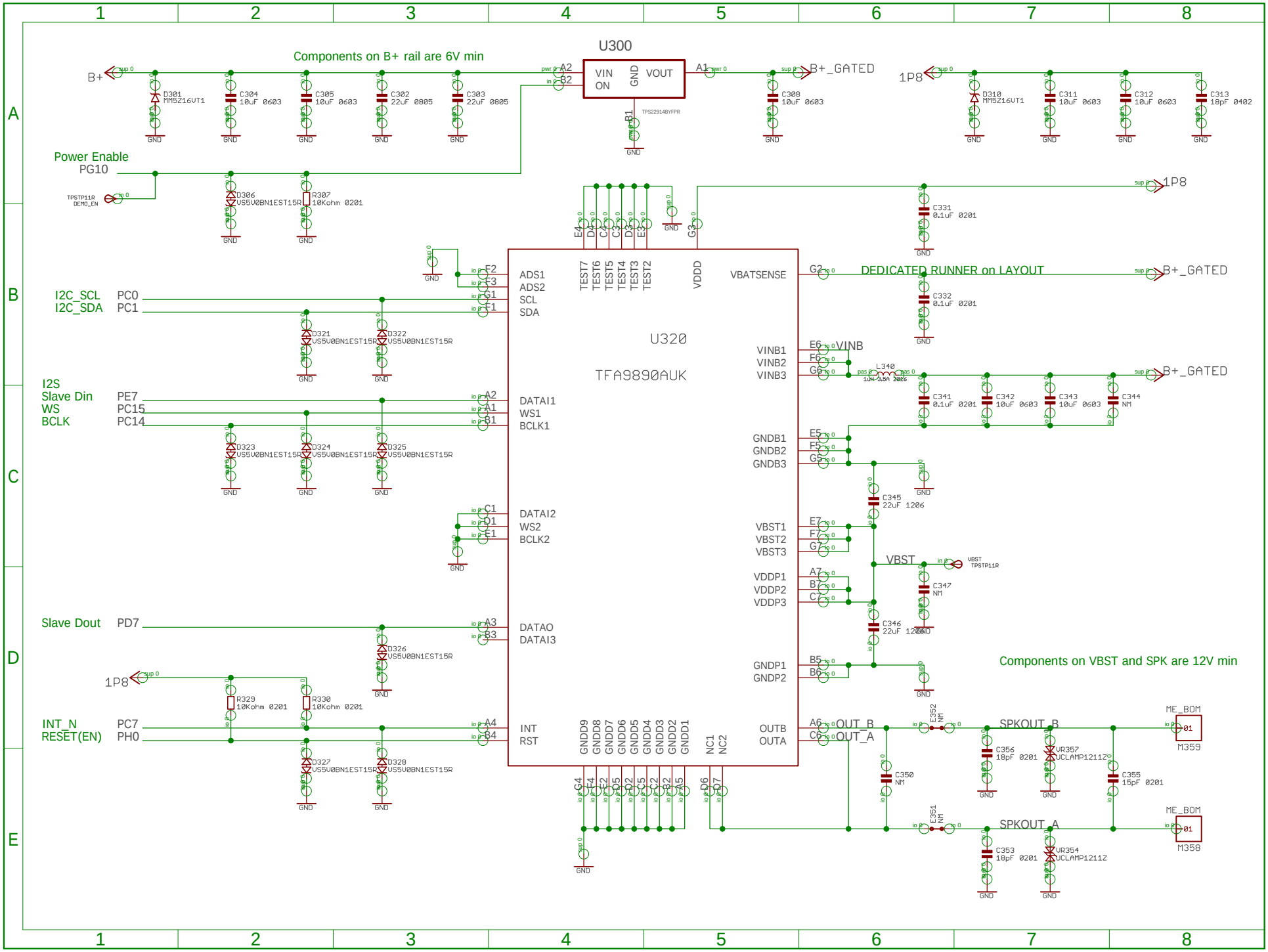
U300
VIN
ON
GND
VOUT
TPS22914BYFPR
B+
B+_GATED
1P8
Components on B+ rail are 6V min
Power Enable
PG10
TPSTP11R
DEMO_EN
D301
MM5Z16VT1
C304
10uF 0603
C305
10uF 0603
C302
22uF 0805
C303
22uF 0805
C308
10uF 0603
D310
MM5Z16VT1
C311
10uF 0603
C312
10uF 0603
C313
18pF 0402
D306
VS5V0BN1EST15R
R307
10Kohm 0201
C331
0.1uF 0201
C332
0.1uF 0201
DEDICATED RUNNER on LAYOUT
U320
TFA9890AUK
ADS1
ADS2
SCL
SDA
TEST7
TEST6
TEST5
TEST4
TEST3
TEST2
VDDD
VBATSENSE
VINB1
VINB2
VINB3
VINB
L340
10uH-3.5A
C341
0.1uF 0201
C342
10uF 0603
C343
10uF 0603
C344
NM
GNDB1
GNDB2
GNDB3
C345
22uF 1206
VBST1
VBST2
VBST3
VBST
VBST
TPSTP11R
C347
NM
VDDP1
VDDP2
VDDP3
C346
22uF 1206
GNDP1
GNDP2
Components on VBST and SPK are 12V min
I2C_SCL
I2C_SDA
PC0
PC1
D321
VS5V0BN1EST15R
D322
VS5V0BN1EST15R
I2S
Slave Din
WS
BCLK
PE7
PC15
PC14
D323
VS5V0BN1EST15R
D324
VS5V0BN1EST15R
D325
VS5V0BN1EST15R
DATAI1
WS1
BCLK1
DATAI2
WS2
BCLK2
Slave Dout
PD7
D326
VS5V0BN1EST15R
DATAO
DATAI3
R329
10Kohm 0201
R330
10Kohm 0201
INT_N
RESET(EN)
PC7
PH0
D327
VS5V0BN1EST15R
D328
VS5V0BN1EST15R
INT
RST
GNDD9
GNDD8
GNDD7
GNDD6
GNDD5
GNDD4
GNDD3
GNDD2
GNDD1
NC1
NC2
OUTB
OUTA
OUT_B
OUT_A
C352
NM
C350
NM
C351
NM
SPKOUT_B
SPKOUT_A
C356
18pF 0201
VR357
UCLAMP1211Z
C355
15pF 0201
C353
18pF 0201
VR354
UCLAMP1211Z
ME_BOM
M359
M358
GND