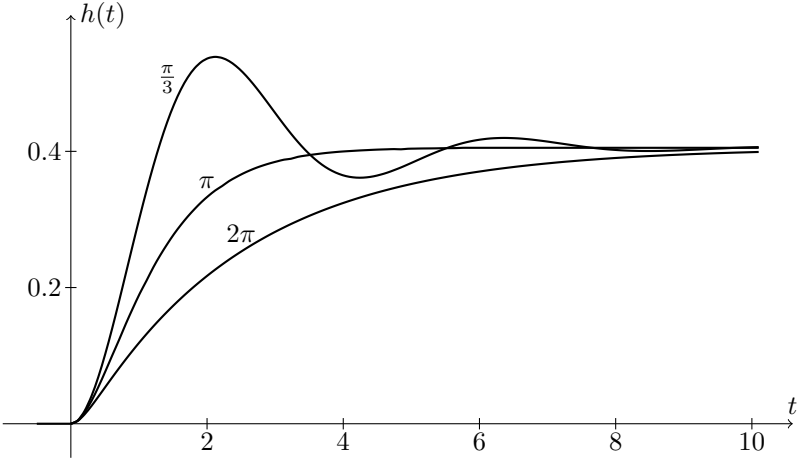
$h(t)$
$\frac{\pi}{3}$
π
2π
0.4
0.2
t
2
4
6
8
10

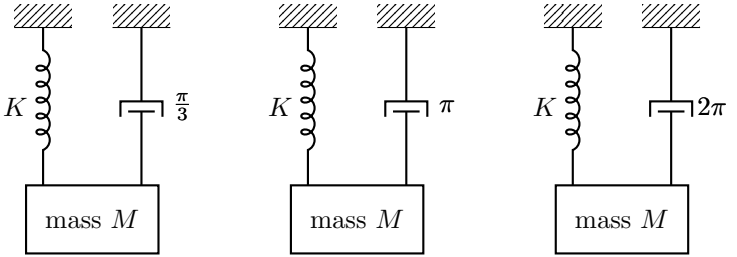
K
$\frac{\pi}{3}$
mass M
K
π
mass M
K
2π
mass M

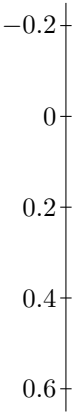
−0.2
0
0.2
0.4
0.6

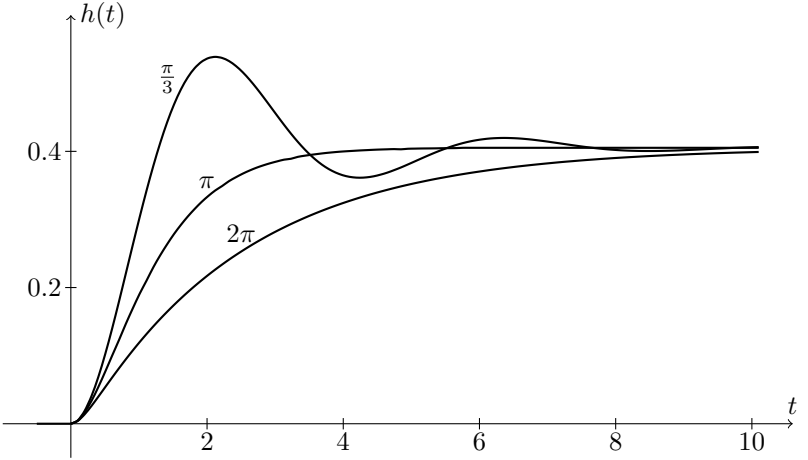
$h(t)$
$\frac{\pi}{3}$
π
2π
0.4
0.2
t
2
4
6
8
10

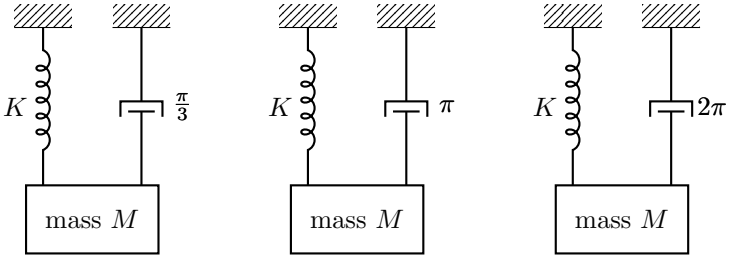
K
$\frac{\pi}{3}$
mass M
K
π
mass M
K
2π
mass M

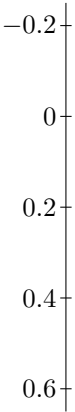
−0.2
0
0.2
0.4
0.6

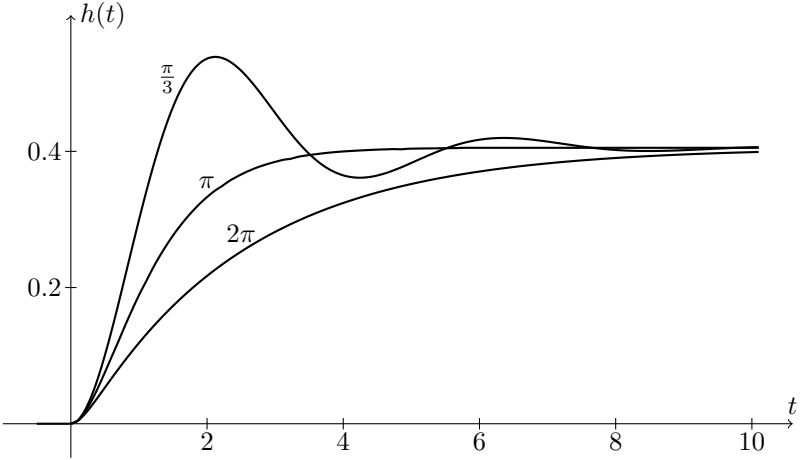
$h(t)$
$\frac{\pi}{3}$
π
2π
0.4
0.2
t
2
4
6
8
10

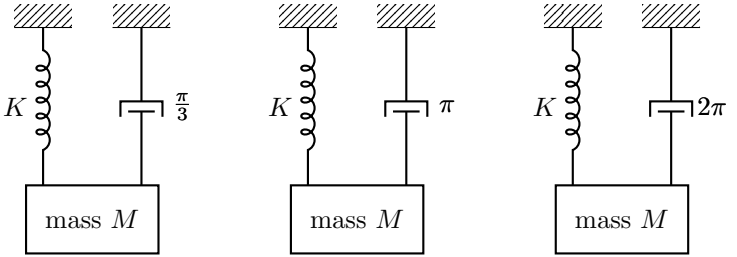
K
$\frac{\pi}{3}$
mass M
K
π
mass M
K
2π
mass M

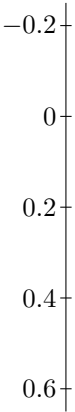
−0.2
0
0.2
0.4
0.6

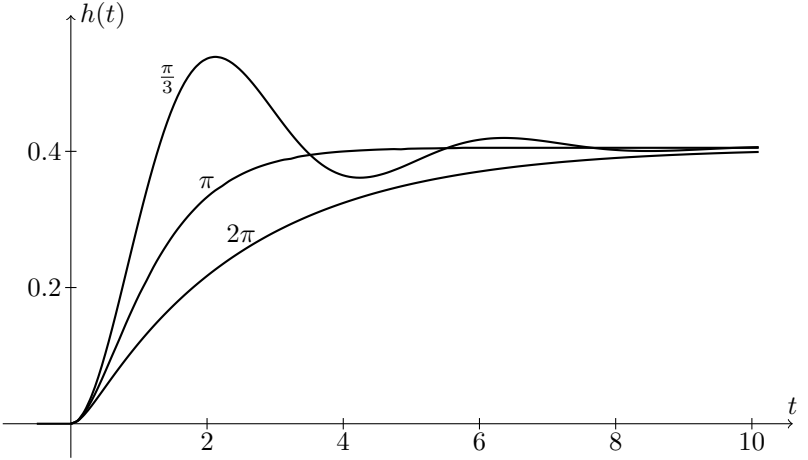
$h(t)$
$\frac{\pi}{3}$
π
2π
0.4
0.2
t
2
4
6
8
10

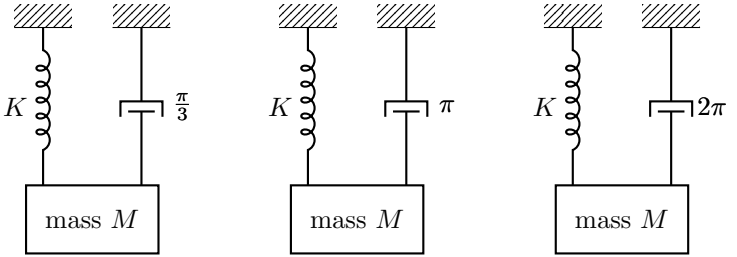
K
$\frac{\pi}{3}$
mass M
K
π
mass M
K
2π
mass M

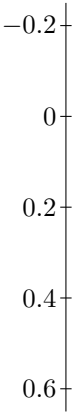
−0.2
0
0.2
0.4
0.6

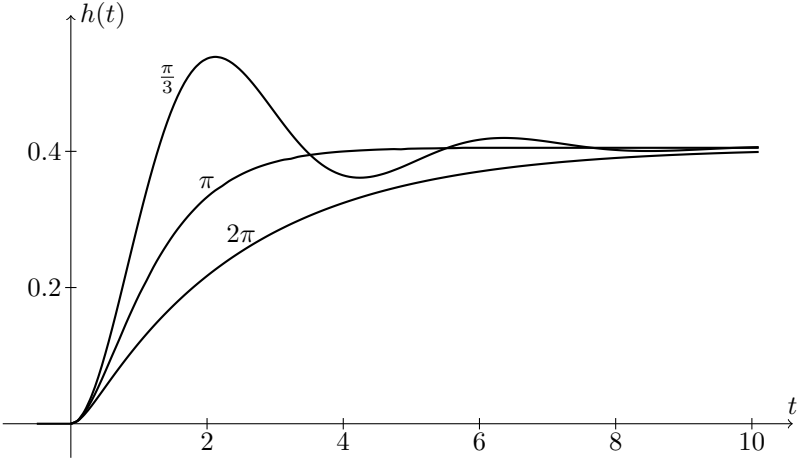
$h(t)$
$\frac{\pi}{3}$
π
2π
0.4
0.2
t
2
4
6
8
10

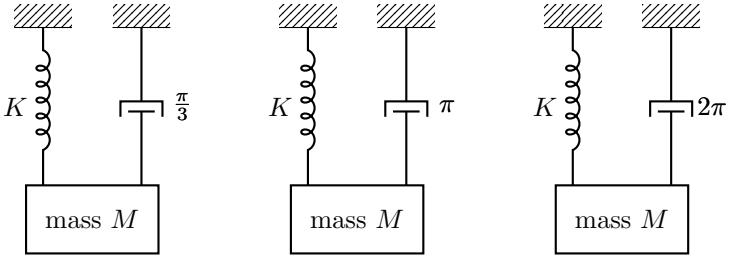
K
$\frac{\pi}{3}$
mass M
K
π
mass M
K
2π
mass M

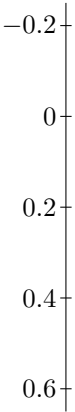
−0.2
0
0.2
0.4
0.6

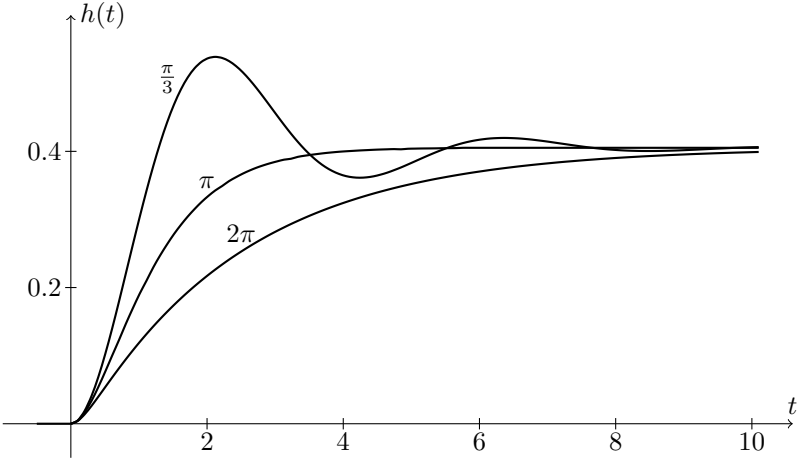
$h(t)$
$\frac{\pi}{3}$
π
2π
0.4
0.2
t
2
4
6
8
10

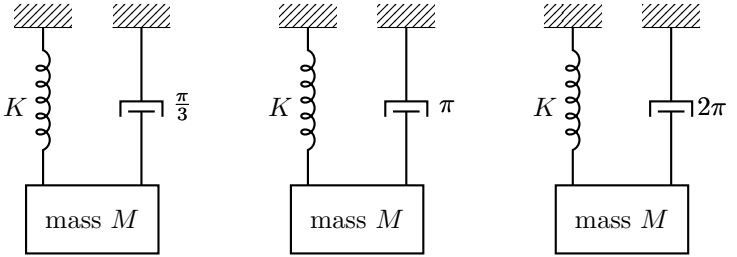
K
$\frac{\pi}{3}$
mass M
K
π
mass M
K
2π
mass M

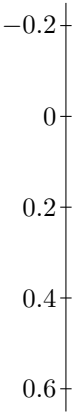
−0.2
0
0.2
0.4
0.6

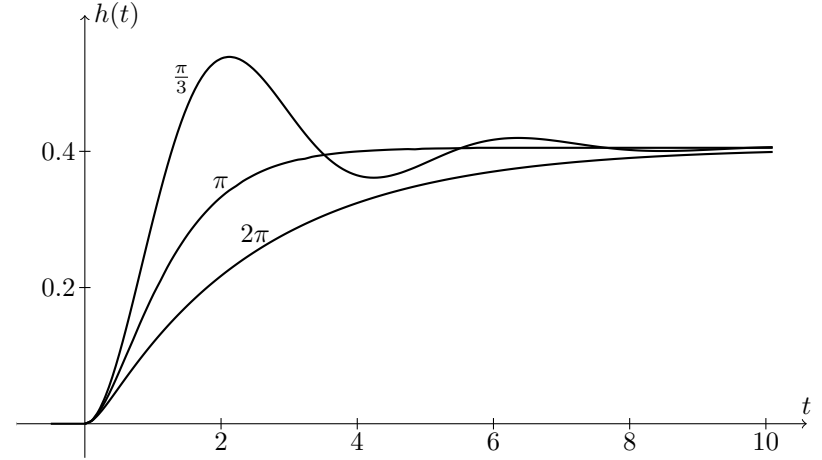
$h(t)$
$\frac{\pi}{3}$
π
2π
0.4
0.2
t
2
4
6
8
10

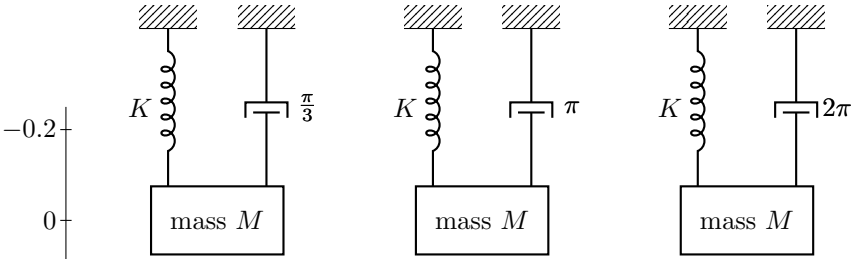
K
$\frac{\pi}{3}$
mass M
K
π
mass M
K
2π
mass M

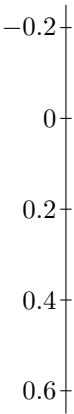
−0.2
0
0.2
0.4
0.6

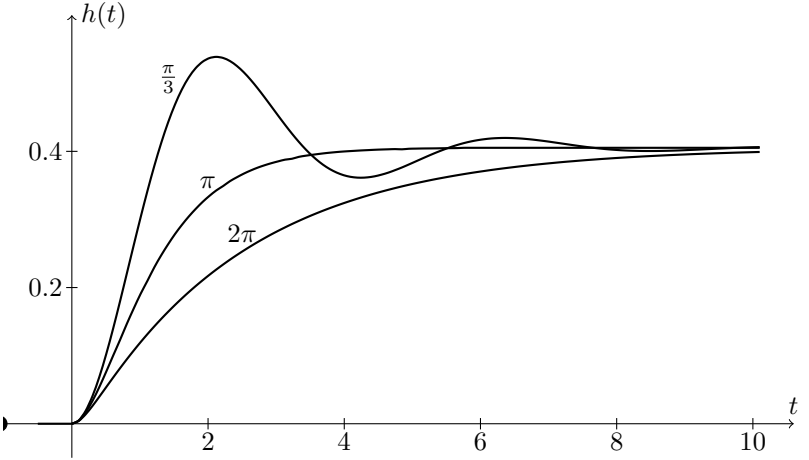
$h(t)$
$\frac{\pi}{3}$
π
2π
0.4
0.2
t
2
4
6
8
10

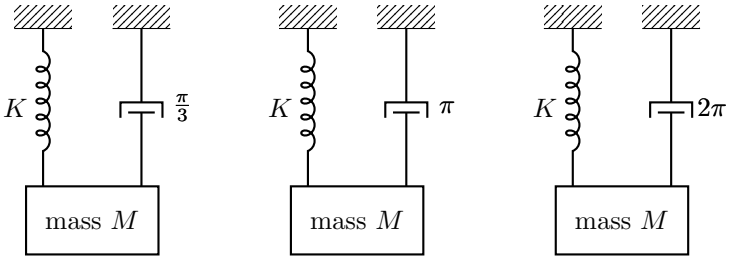
K
$\frac{\pi}{3}$
mass M
K
π
mass M
K
2π
mass M

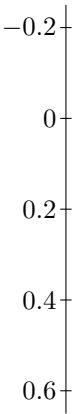
−0.2
0
0.2
0.4
0.6

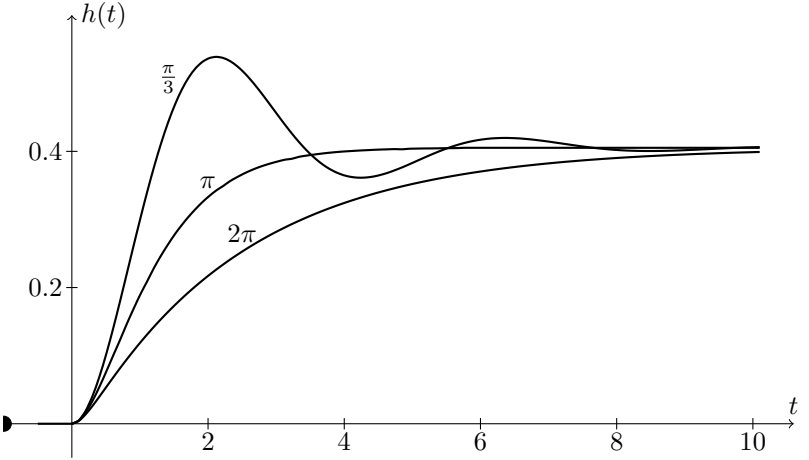
$h(t)$
$\frac{\pi}{3}$
π
2π
0.4
0.2
t
2
4
6
8
10

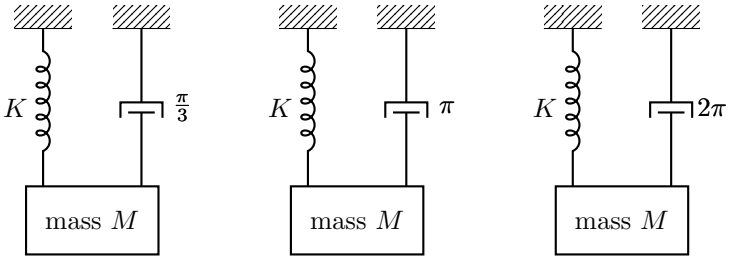
K
$\frac{\pi}{3}$
mass M
K
π
mass M
K
2π
mass M

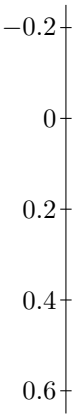
−0.2
0
0.2
0.4
0.6

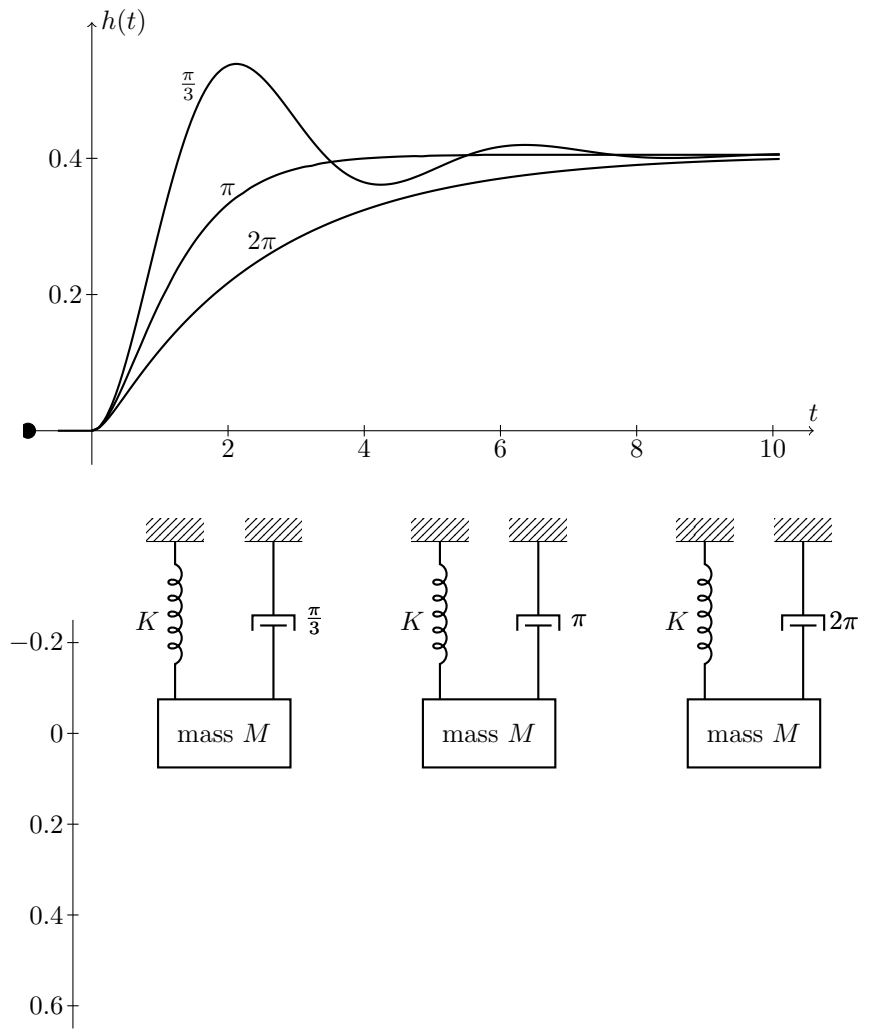
$h(t)$
$\frac{\pi}{3}$
π
2π
0.4
0.2
t
2
4
6
8
10
K
$\frac{\pi}{3}$
mass M
K
π
mass M
K
2π
mass M
−0.2
0
0.2
0.4
0.6

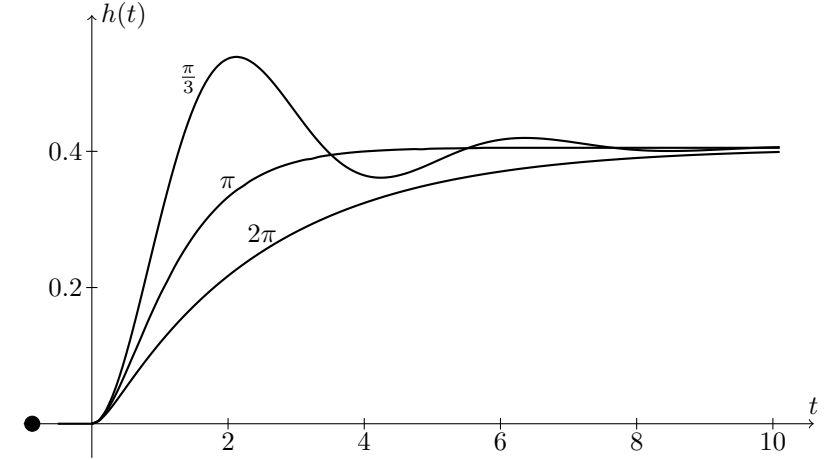
$h(t)$
$\frac{\pi}{3}$
π
2π
0.4
0.2
t
2
4
6
8
10

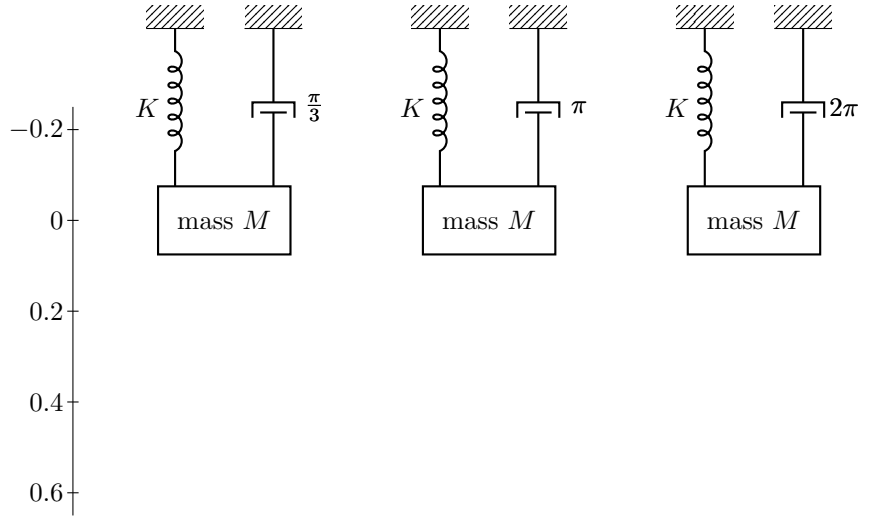
K
$\frac{\pi}{3}$
mass M
K
π
mass M
K
2π
mass M
−0.2
0
0.2
0.4
0.6

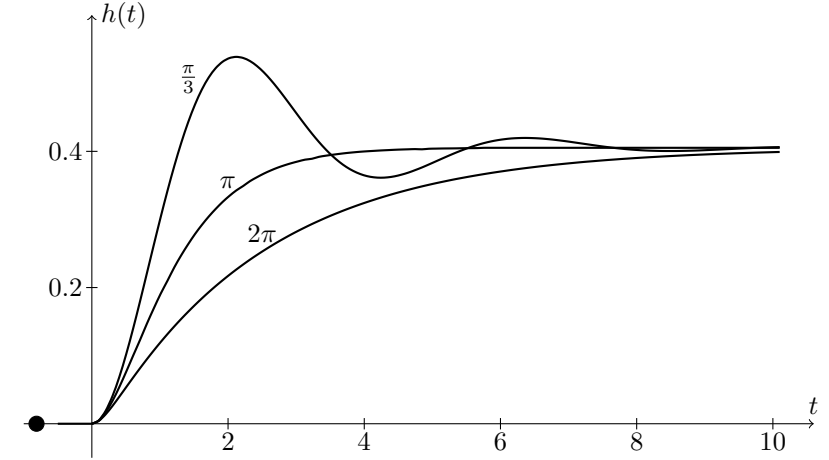
$h(t)$
$\frac{\pi}{3}$
π
2π
0.4
0.2
t
2
4
6
8
10

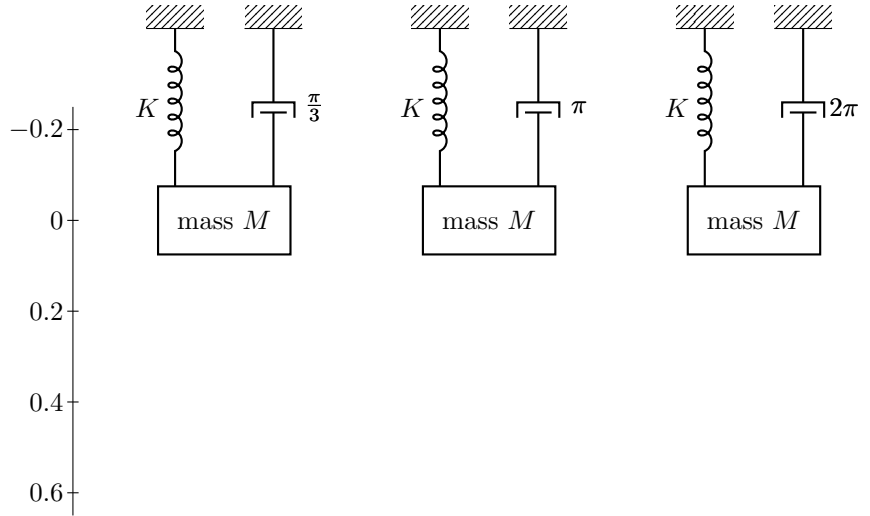
K
$\frac{\pi}{3}$
mass M
K
π
mass M
K
2π
mass M
−0.2
0
0.2
0.4
0.6

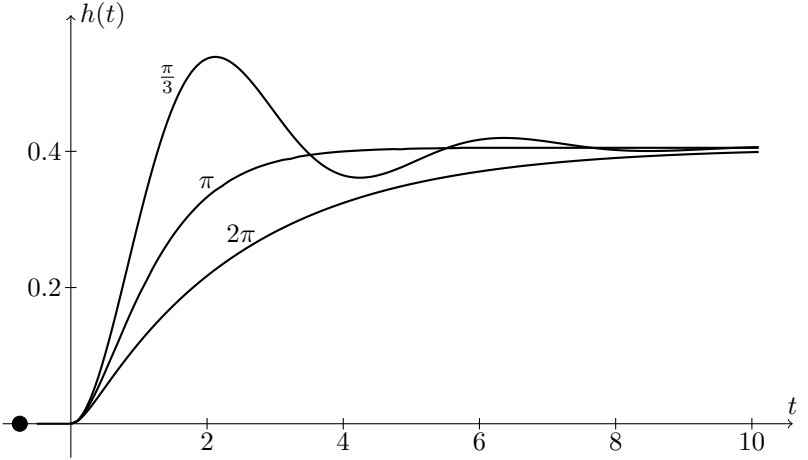
$h(t)$
$\frac{\pi}{3}$
π
2π
0.4
0.2
t
2
4
6
8
10

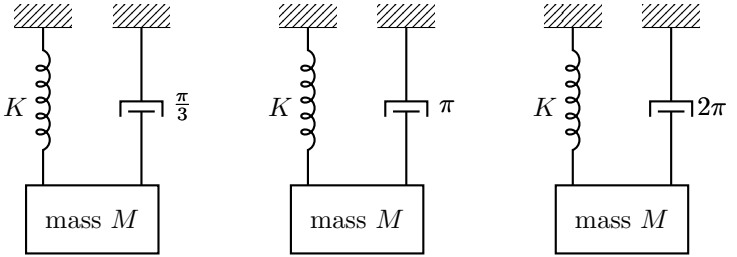
K
$\frac{\pi}{3}$
mass M
K
π
mass M
K
2π
mass M

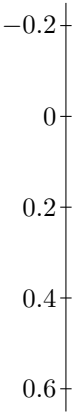
−0.2
0
0.2
0.4
0.6

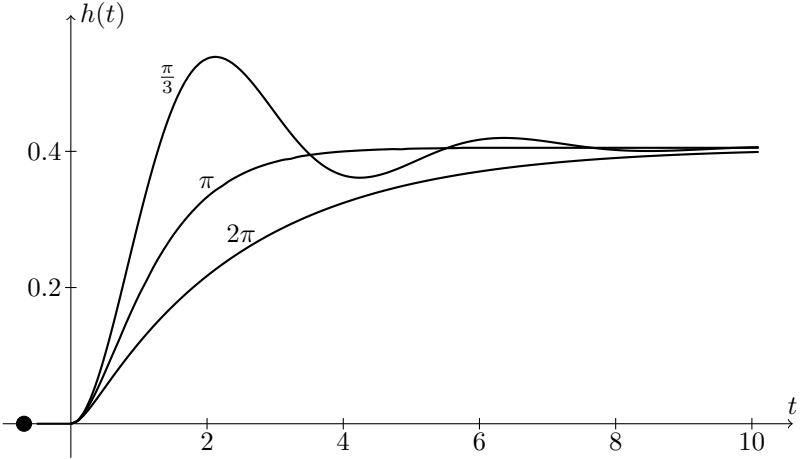
$h(t)$
$\frac{\pi}{3}$
π
2π
0.4
0.2
t
2
4
6
8
10

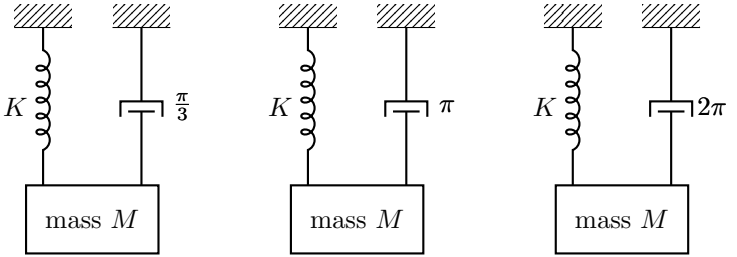
K
$\frac{\pi}{3}$
mass M
K
π
mass M
K
2π
mass M

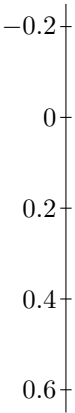
−0.2
0
0.2
0.4
0.6

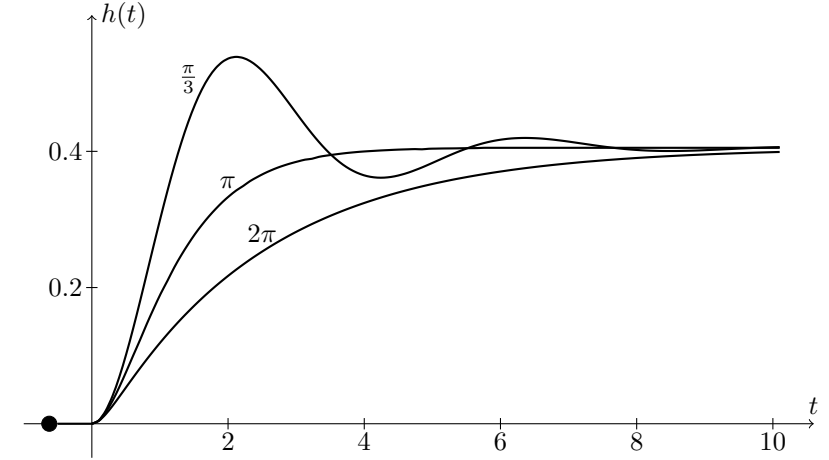
$h(t)$
$\frac{\pi}{3}$
π
2π
0.4
0.2
t
2
4
6
8
10

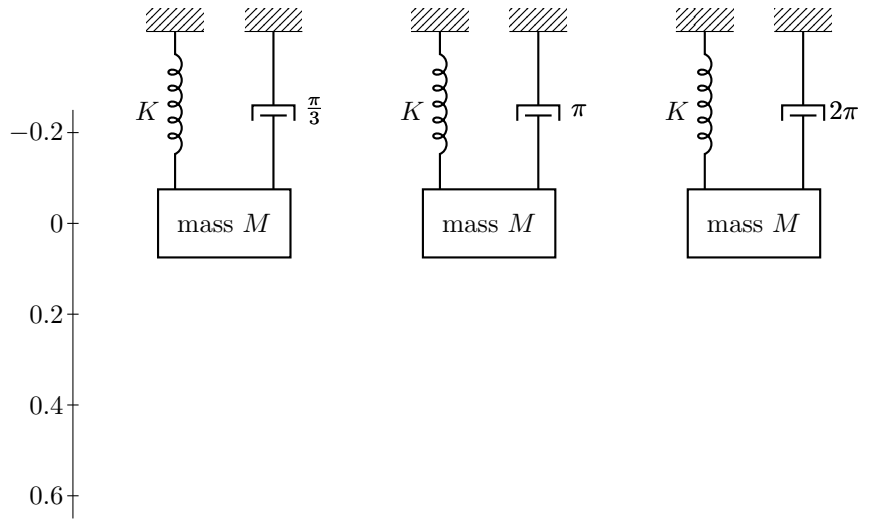
K
$\frac{\pi}{3}$
mass M
K
π
mass M
K
2π
mass M
−0.2
0
0.2
0.4
0.6

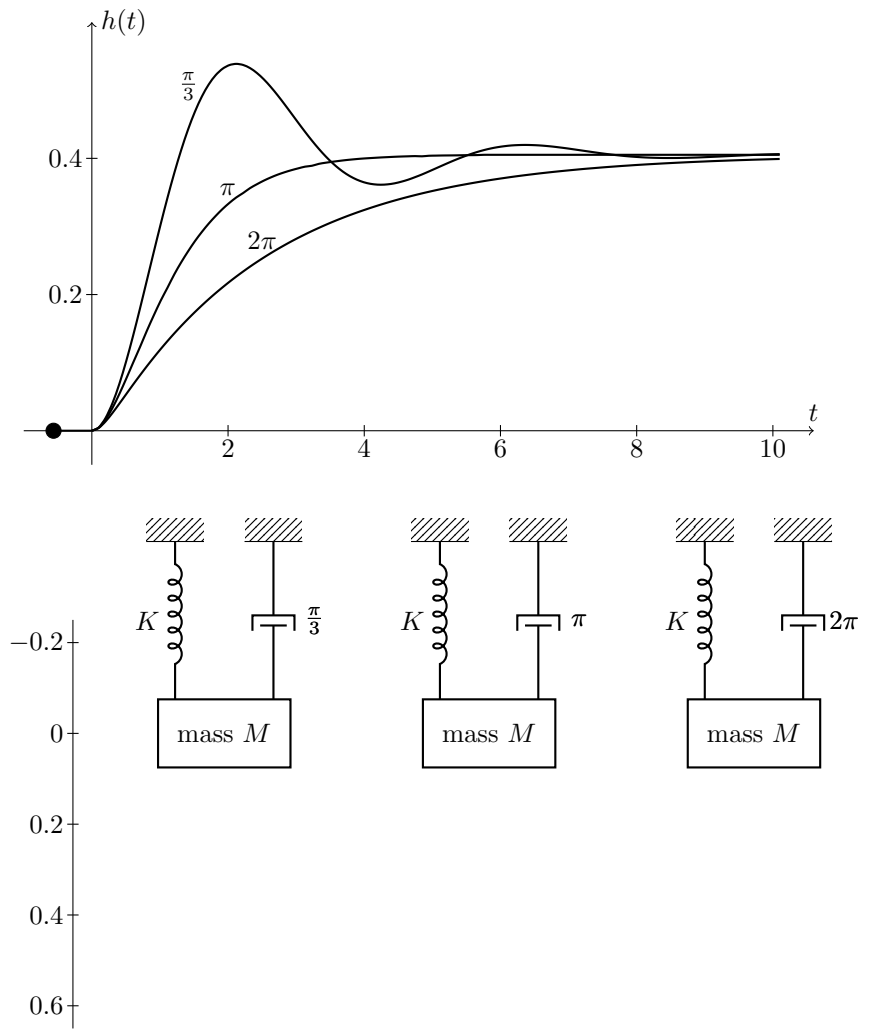
$h(t)$
$\frac{\pi}{3}$
π
2π
0.4
0.2
t
2
4
6
8
10
K
$\frac{\pi}{3}$
mass M
K
π
mass M
K
2π
mass M
−0.2
0
0.2
0.4
0.6

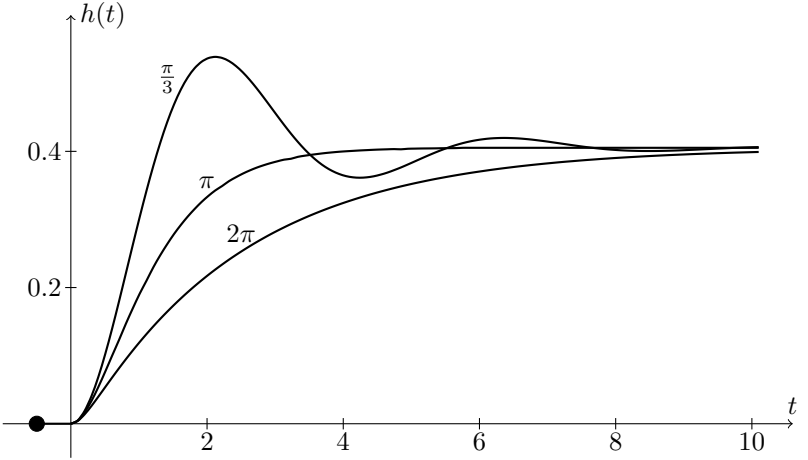
$h(t)$
$\frac{\pi}{3}$
π
2π
0.4
0.2
t
2
4
6
8
10

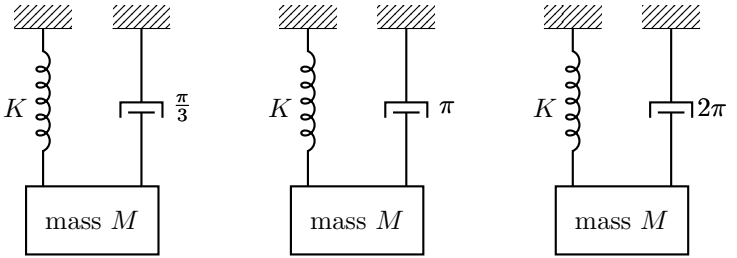
K
$\frac{\pi}{3}$
mass M
K
π
mass M
K
2π
mass M

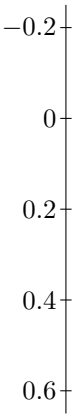
−0.2
0
0.2
0.4
0.6

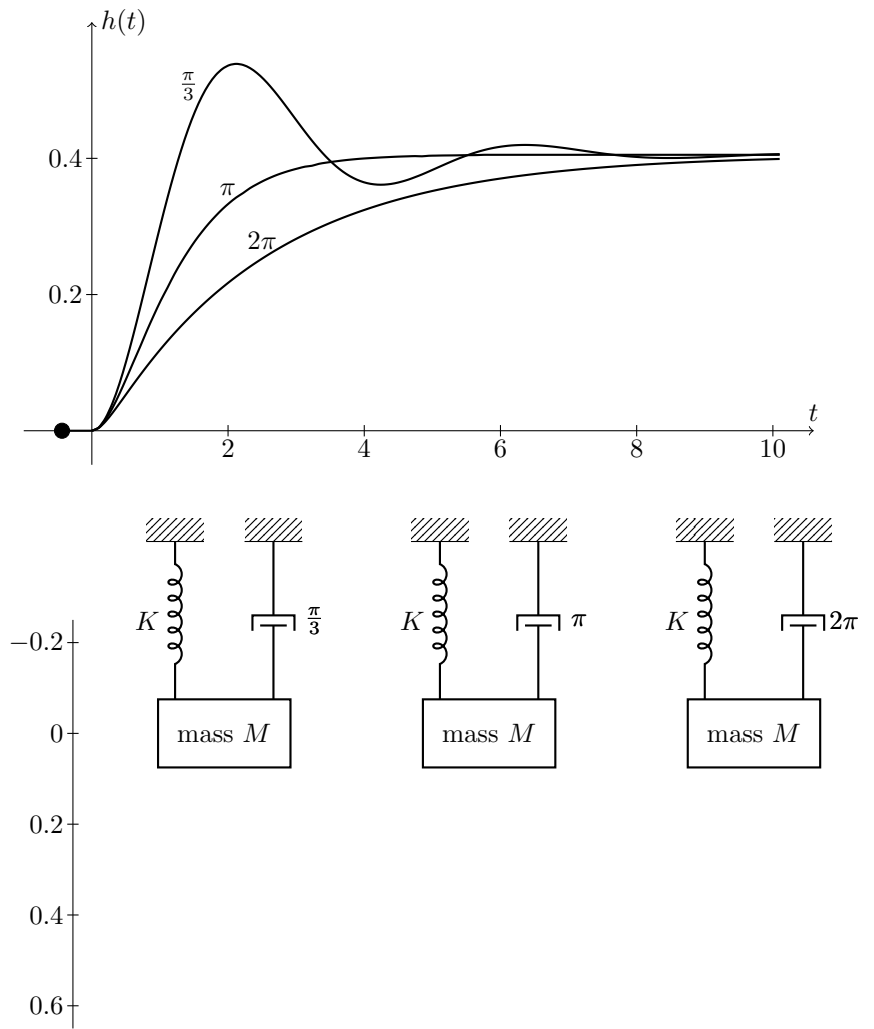
$h(t)$
$\frac{\pi}{3}$
π
2π
0.4
0.2
t
2
4
6
8
10
K
$\frac{\pi}{3}$
mass M
K
π
mass M
K
2π
mass M
−0.2
0
0.2
0.4
0.6

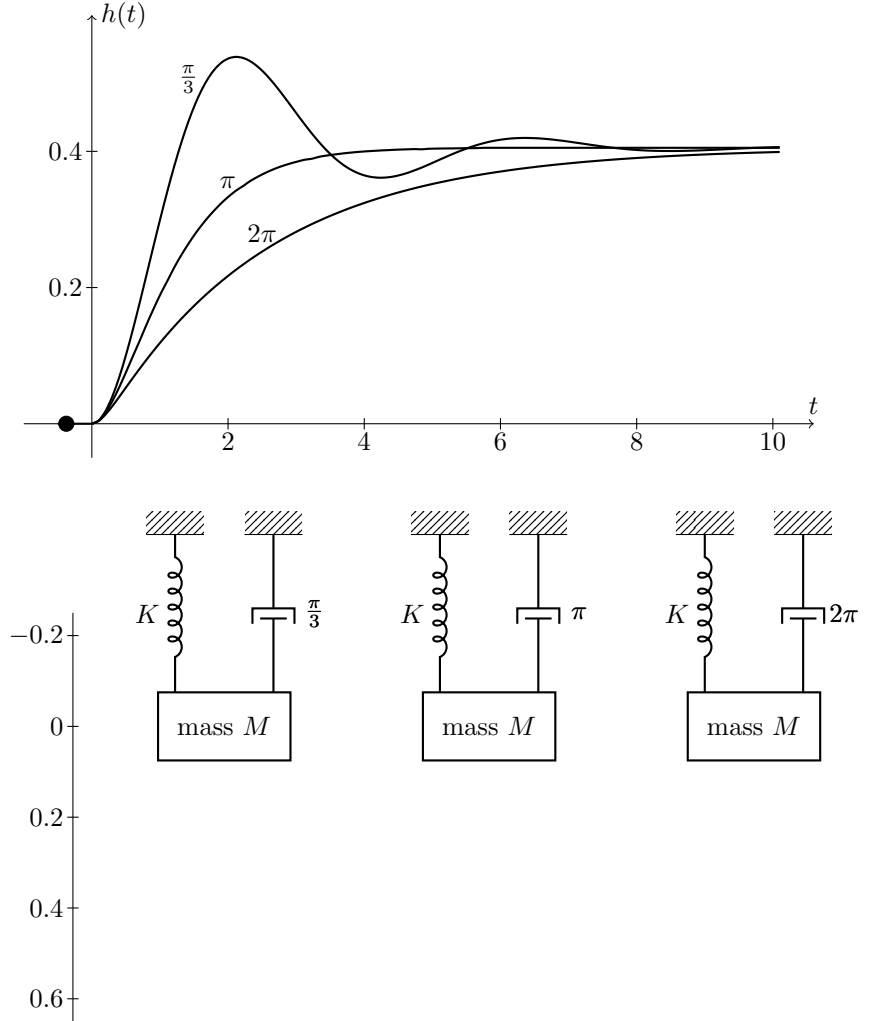
$h(t)$
$\frac{\pi}{3}$
π
2π
0.4
0.2
t
2
4
6
8
10
K
$\frac{\pi}{3}$
mass M
K
π
mass M
K
2π
mass M
−0.2
0
0.2
0.4
0.6

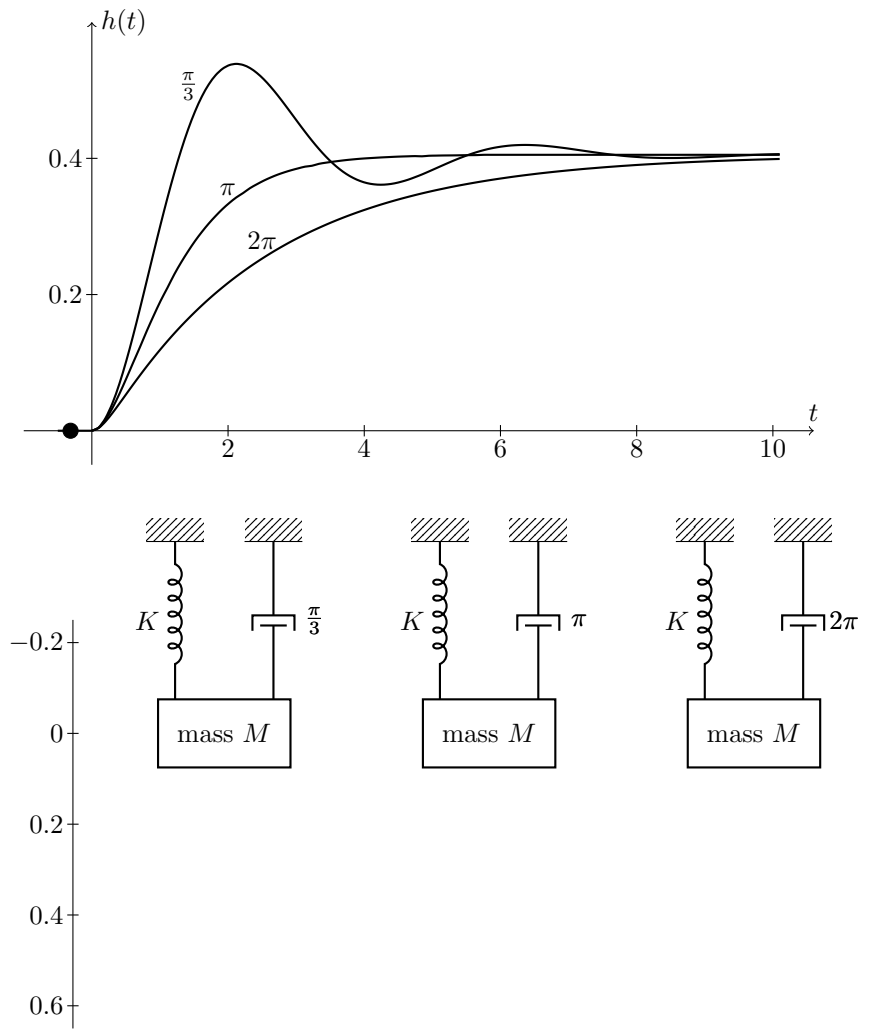
$h(t)$
$\frac{\pi}{3}$
π
2π
0.4
0.2
t
2
4
6
8
10
K
$\frac{\pi}{3}$
mass M
K
π
mass M
K
2π
mass M
−0.2
0
0.2
0.4
0.6

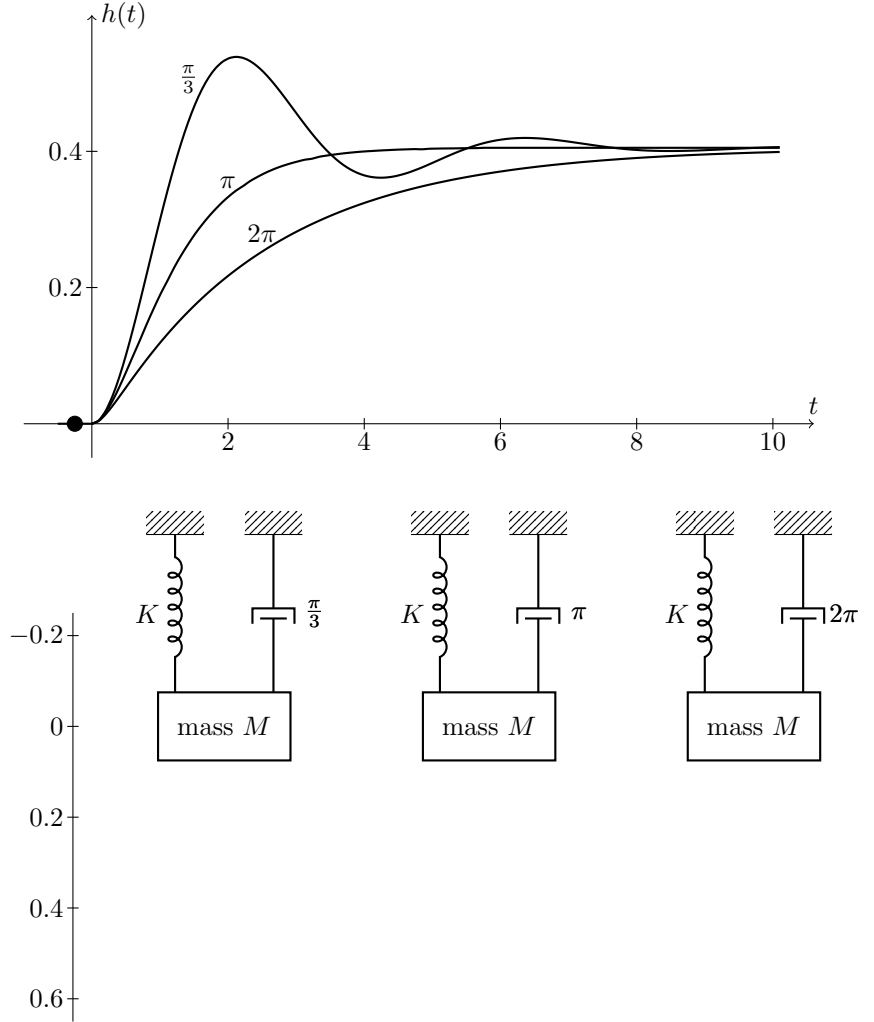
$h(t)$
$\frac{\pi}{3}$
π
2π
0.4
0.2
t
2
4
6
8
10
K
$\frac{\pi}{3}$
mass M
K
π
mass M
K
2π
mass M
−0.2
0
0.2
0.4
0.6

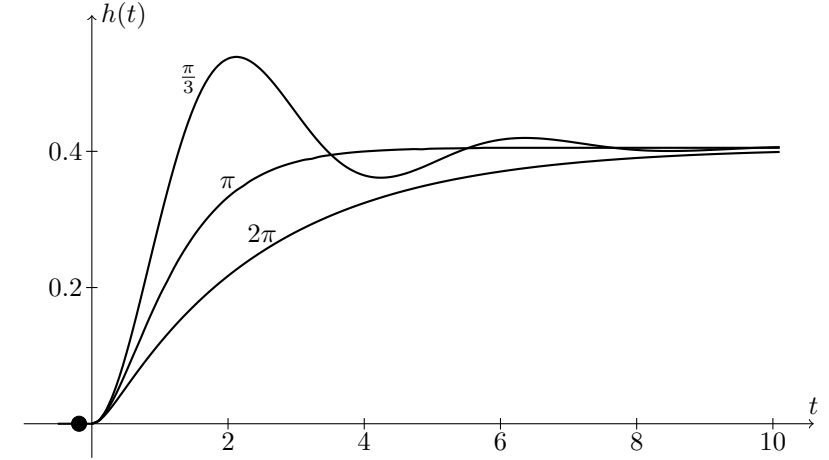
$h(t)$
$\frac{\pi}{3}$
π
2π
0.4
0.2
t
2
4
6
8
10

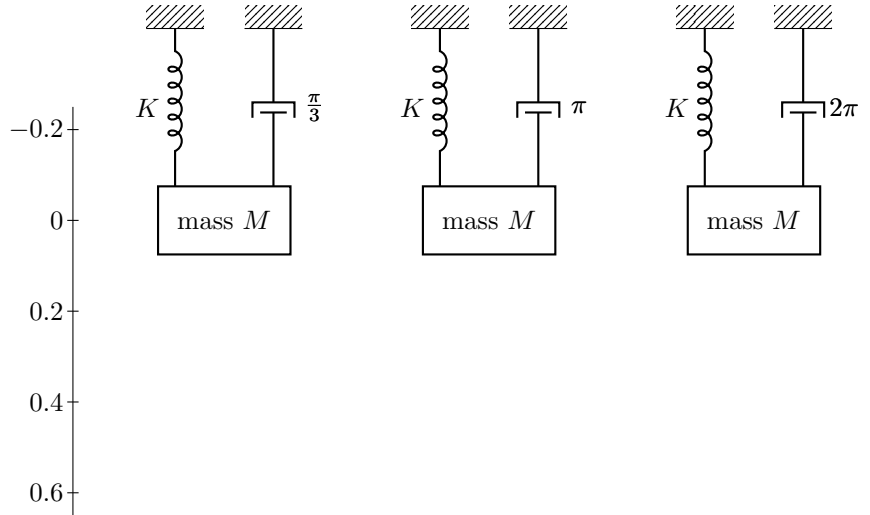
K
$\frac{\pi}{3}$
mass M
K
π
mass M
K
2π
mass M
−0.2
0
0.2
0.4
0.6

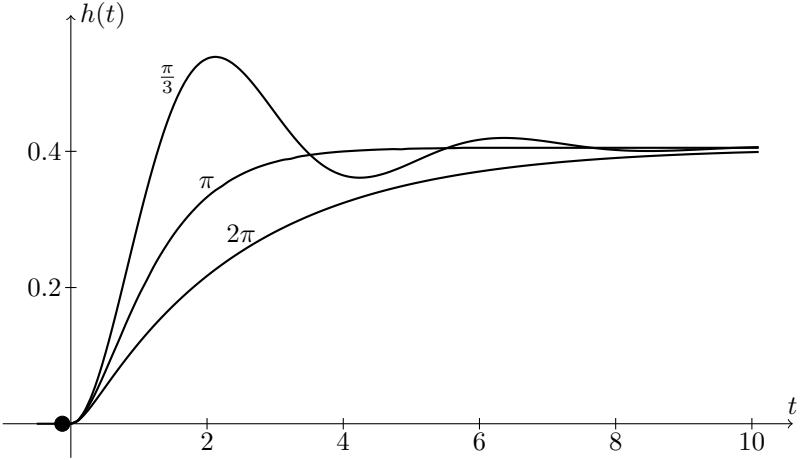
$h(t)$
$\frac{\pi}{3}$
π
2π
0.4
0.2
t
2
4
6
8
10

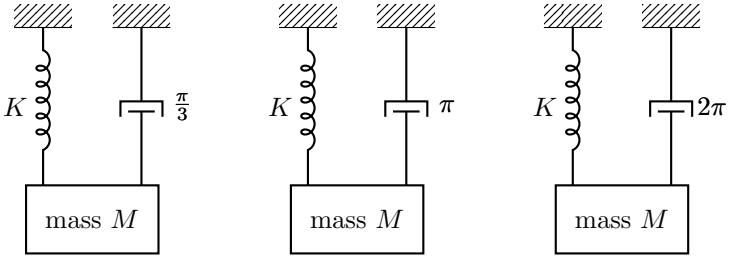
K
$\frac{\pi}{3}$
mass M
K
π
mass M
K
2π
mass M

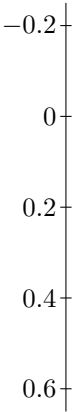
−0.2
0
0.2
0.4
0.6

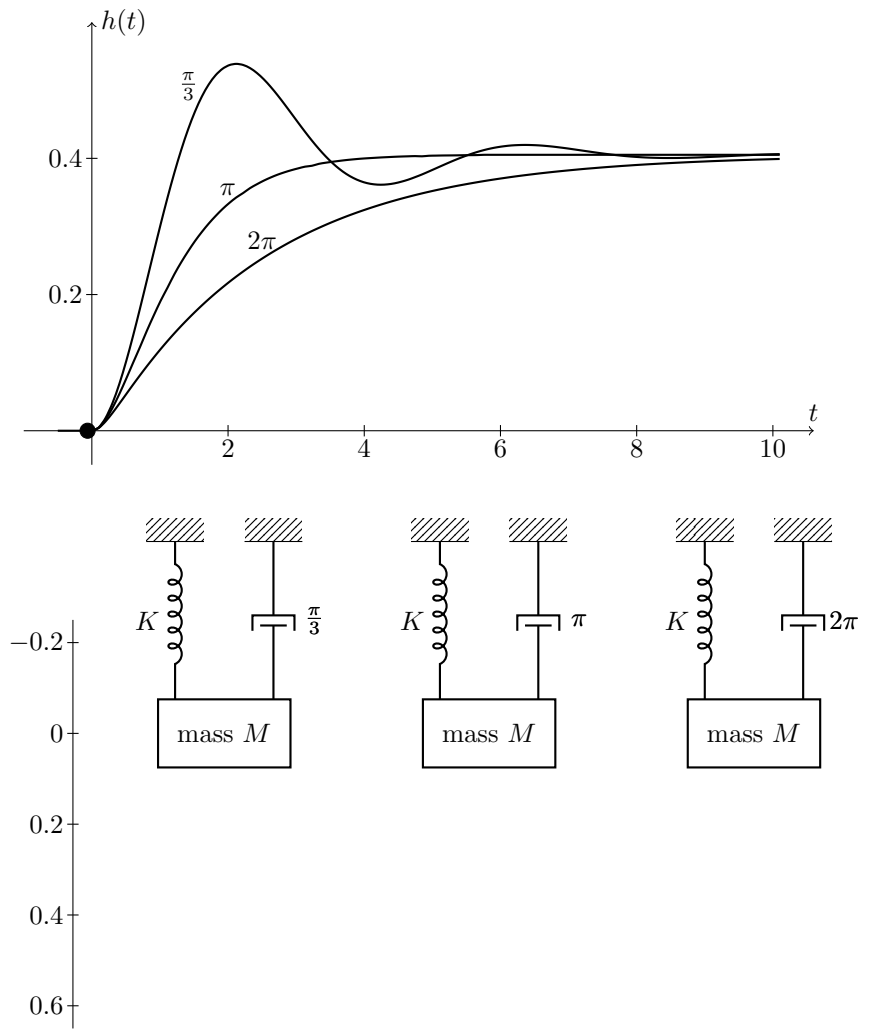
$h(t)$
$\frac{\pi}{3}$
π
2π
0.4
0.2
t
2
4
6
8
10
K
$\frac{\pi}{3}$
mass M
K
π
mass M
K
2π
mass M
−0.2
0
0.2
0.4
0.6

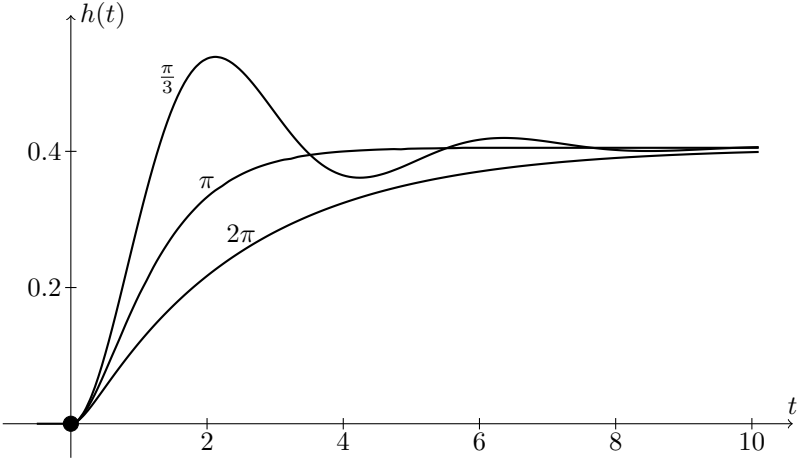
$h(t)$
$\frac{\pi}{3}$
π
2π
0.4
0.2
t
2
4
6
8
10

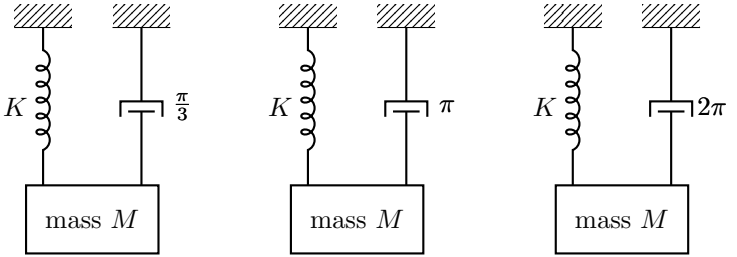
K
$\frac{\pi}{3}$
mass M
K
π
mass M
K
2π
mass M

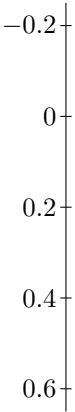
−0.2
0
0.2
0.4
0.6

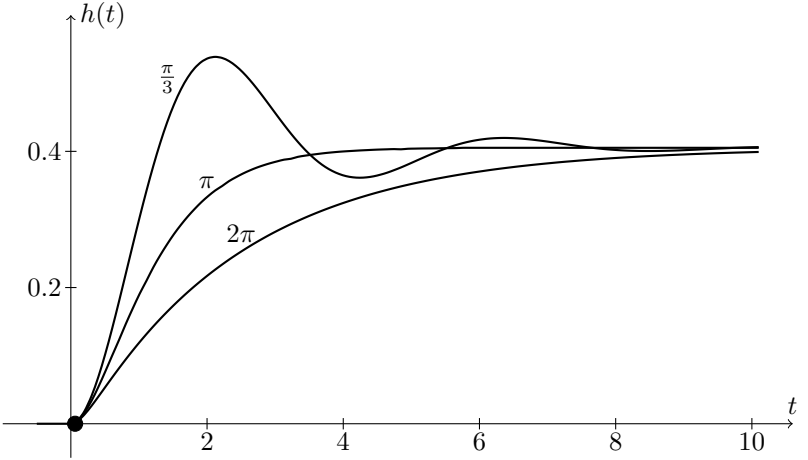
$h(t)$
$\frac{\pi}{3}$
π
2π
0.4
0.2
t
2
4
6
8
10

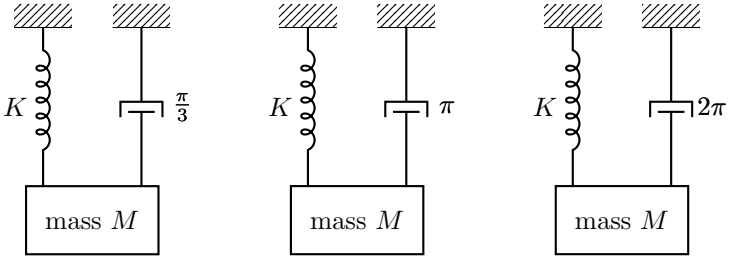
K
$\frac{\pi}{3}$
mass M
K
π
mass M
K
2π
mass M

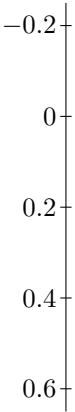
−0.2
0
0.2
0.4
0.6

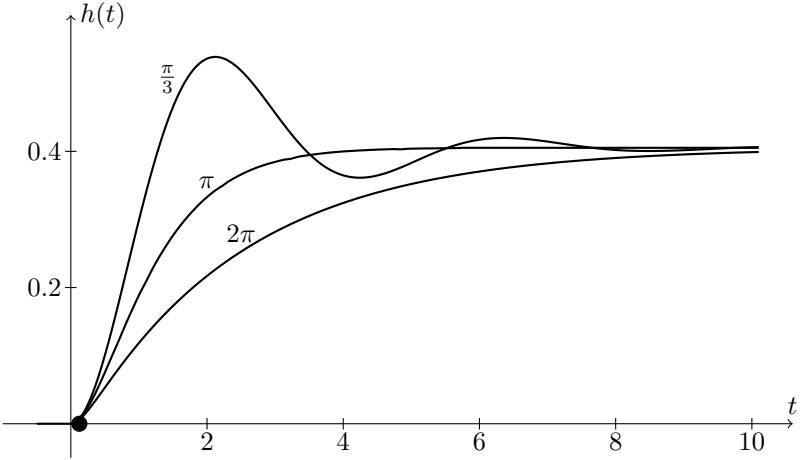
$h(t)$
$\frac{\pi}{3}$
π
2π
0.4
0.2
t
2
4
6
8
10

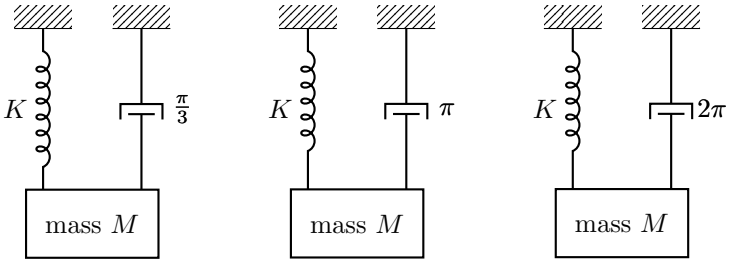
K
$\frac{\pi}{3}$
mass M
K
π
mass M
K
2π
mass M

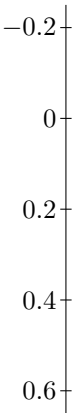
−0.2
0
0.2
0.4
0.6

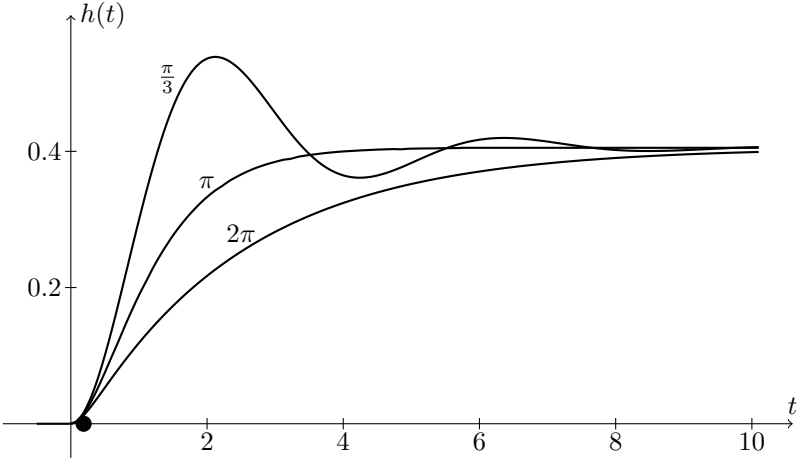
$h(t)$
$\frac{\pi}{3}$
π
2π
0.4
0.2
t
2
4
6
8
10

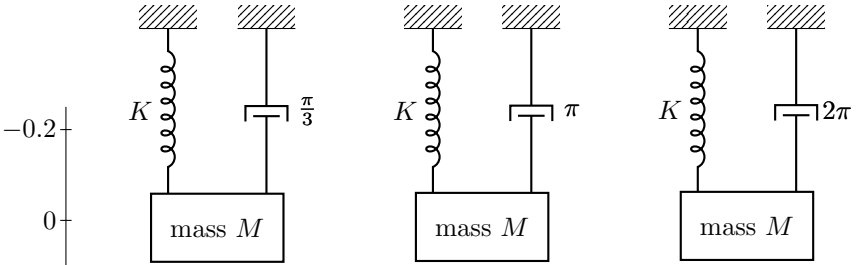
K
$\frac{\pi}{3}$
mass M
K
π
mass M
K
2π
mass M

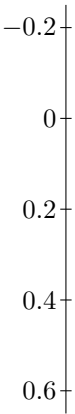
−0.2
0
0.2
0.4
0.6

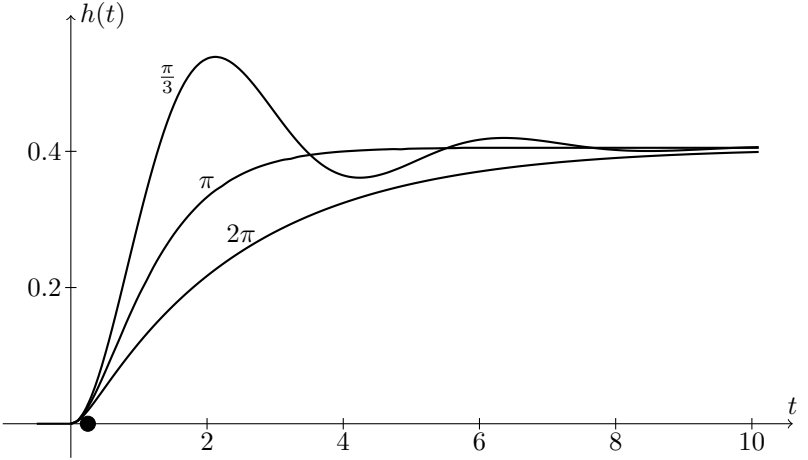
$h(t)$
$\frac{\pi}{3}$
π
2π
0.4
0.2
t
2
4
6
8
10

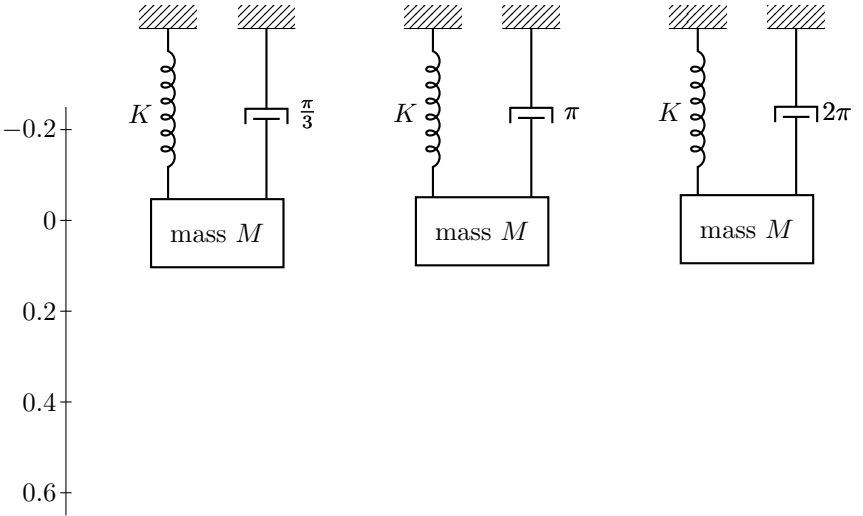
K
$\frac{\pi}{3}$
mass M
K
π
mass M
K
2π
mass M
−0.2
0
0.2
0.4
0.6

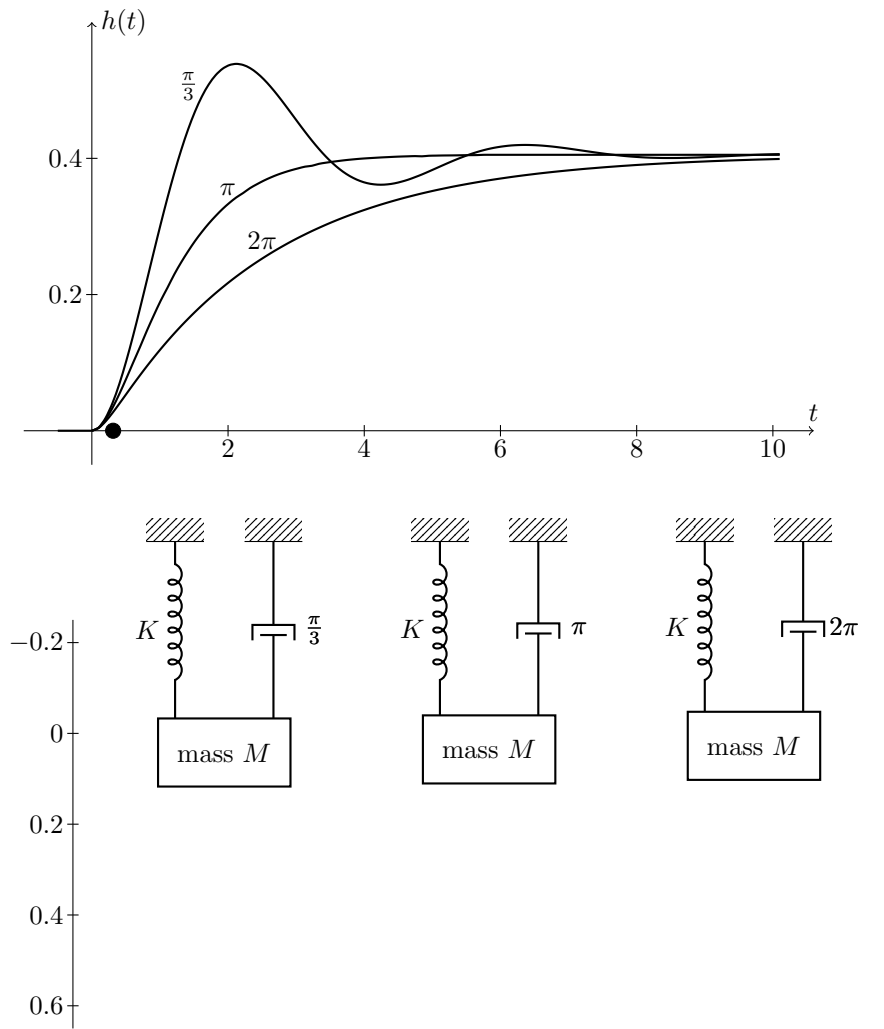
h(t)
π/3
π
2π
0.4
0.2
t
2
4
6
8
10
K
π/3
mass M
K
π
mass M
K
2π
mass M
−0.2
0
0.2
0.4
0.6

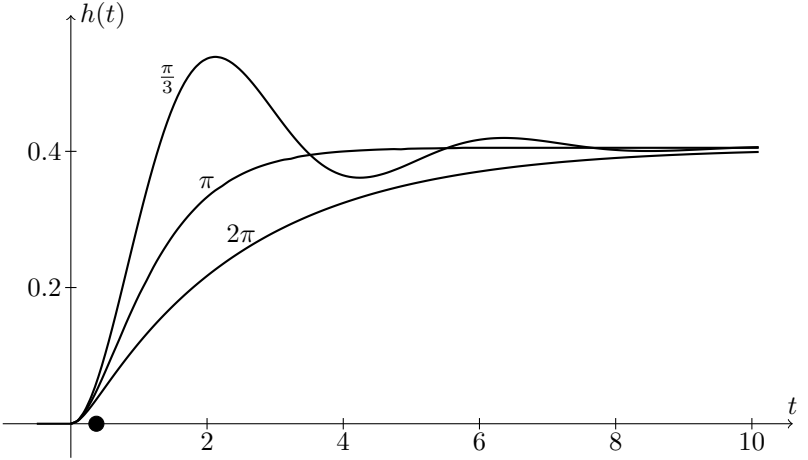
$h(t)$
$\frac{\pi}{3}$
π
2π
0.4
0.2
t
2
4
6
8
10

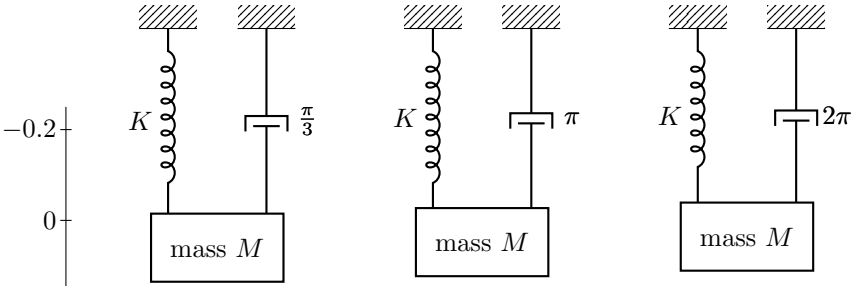
K
$\frac{\pi}{3}$
mass M
K
π
mass M
K
2π
mass M

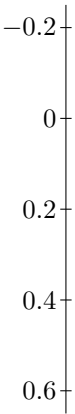
−0.2
0
0.2
0.4
0.6

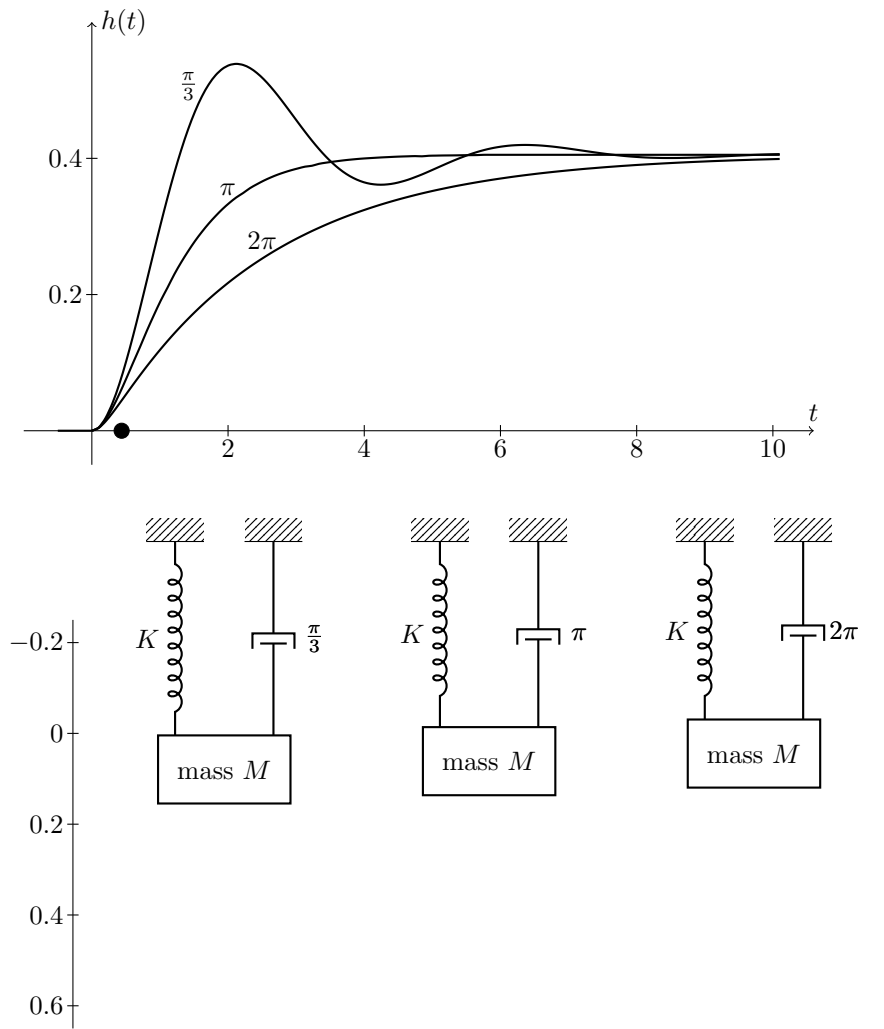
h(t)
π/3
π
2π
0.4
0.2
t
2
4
6
8
10
K
π/3
mass M
K
π
mass M
K
2π
mass M
−0.2
0
0.2
0.4
0.6

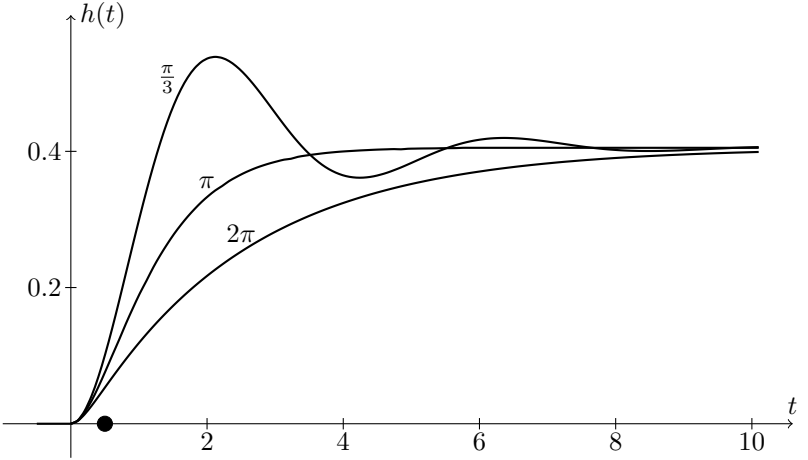
$h(t)$
$\frac{\pi}{3}$
π
2π
0.4
0.2
t
2
4
6
8
10

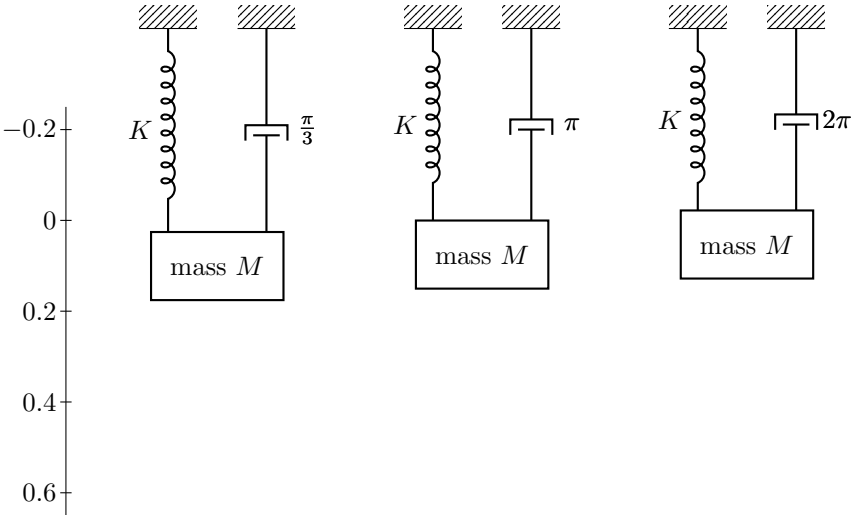
K
$\frac{\pi}{3}$
mass M
K
π
mass M
K
2π
mass M
−0.2
0
0.2
0.4
0.6

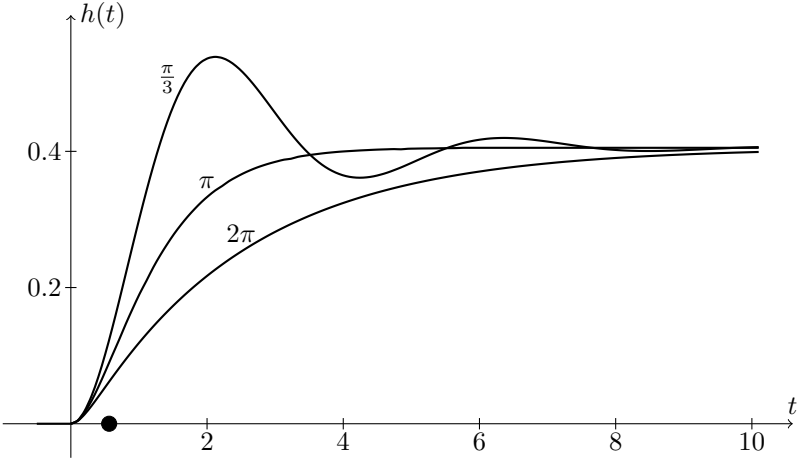
$h(t)$
$\frac{\pi}{3}$
π
2π
0.4
0.2
t
2
4
6
8
10

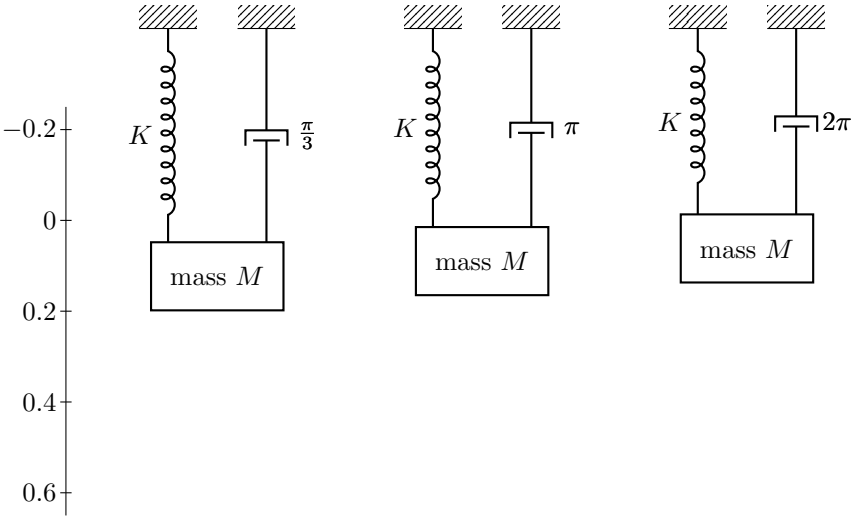
K
$\frac{\pi}{3}$
mass M
K
π
mass M
K
2π
mass M
−0.2
0
0.2
0.4
0.6

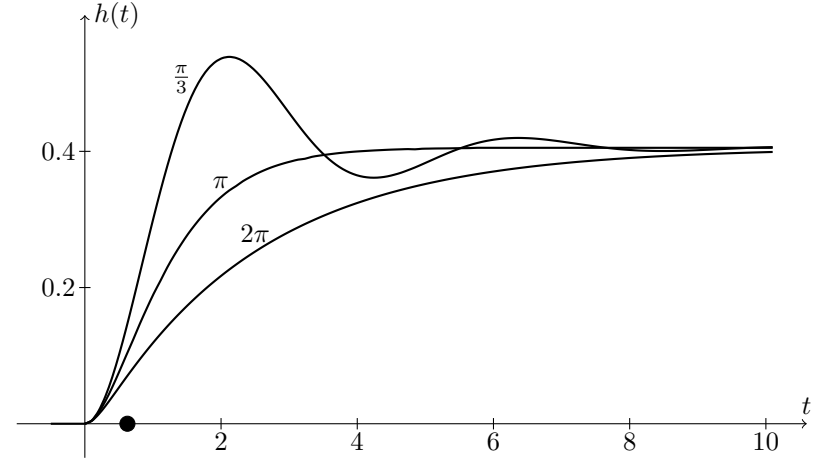
$h(t)$
$\frac{\pi}{3}$
π
2π
0.4
0.2
t
2
4
6
8
10

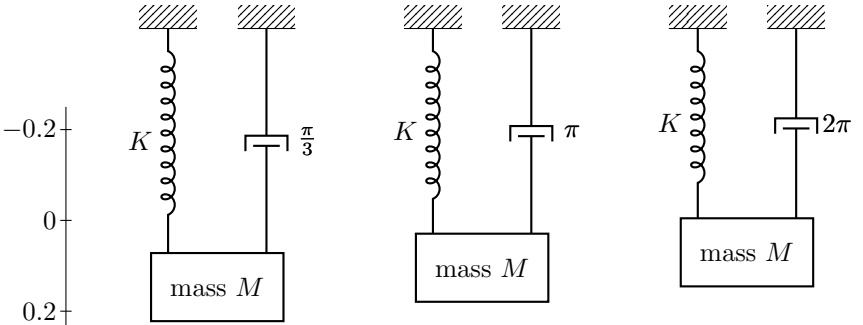
K
$\frac{\pi}{3}$
mass M
K
π
mass M
K
2π
mass M

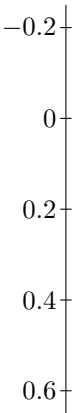
−0.2
0
0.2
0.4
0.6

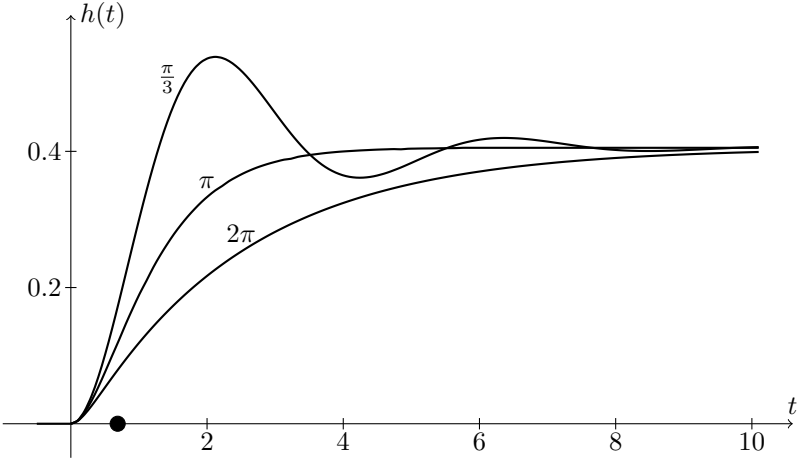
$h(t)$
$\frac{\pi}{3}$
π
2π
0.4
0.2
t
2
4
6
8
10

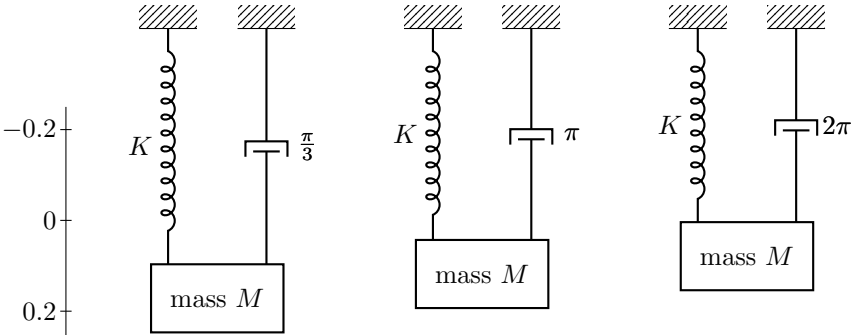
K
$\frac{\pi}{3}$
mass M
K
π
mass M
K
2π
mass M

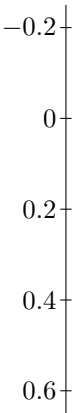
−0.2
0
0.2
0.4
0.6

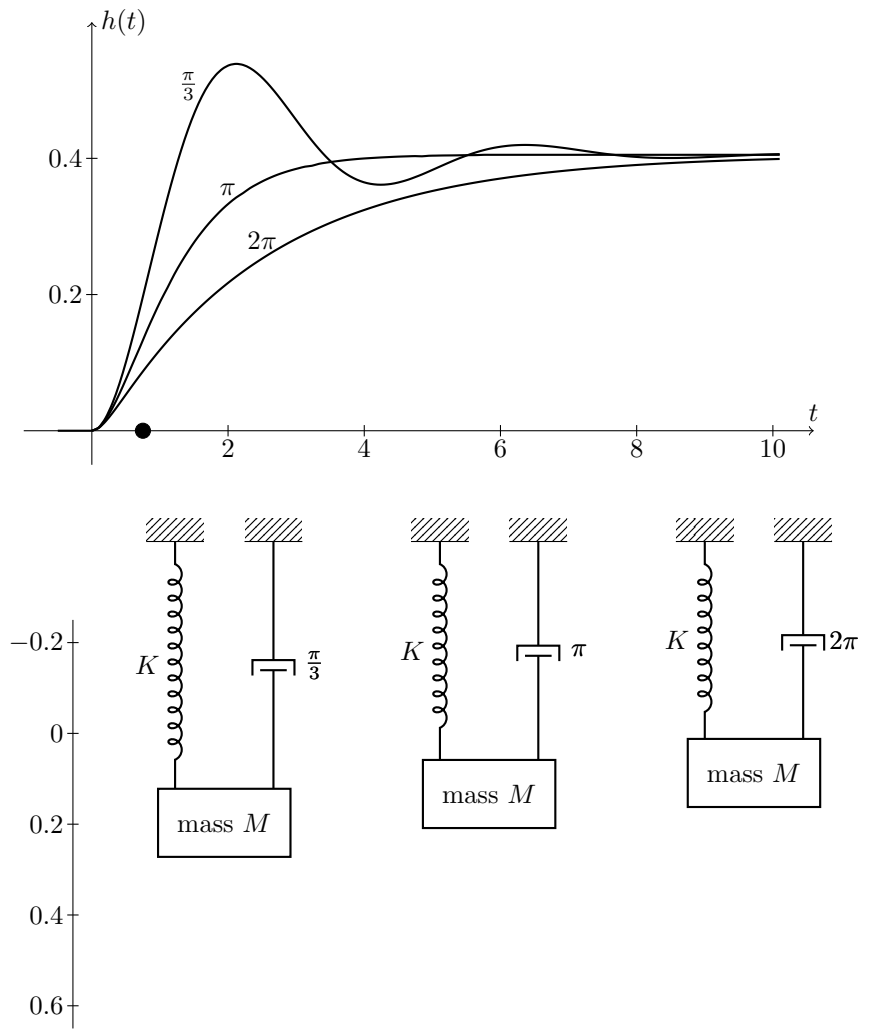
h(t)
t
0.4
0.2
2
4
6
8
10
π/3
π
2π
−0.2
0
0.2
0.4
0.6
K
π/3
mass M
K
π
mass M
K
2π
mass M

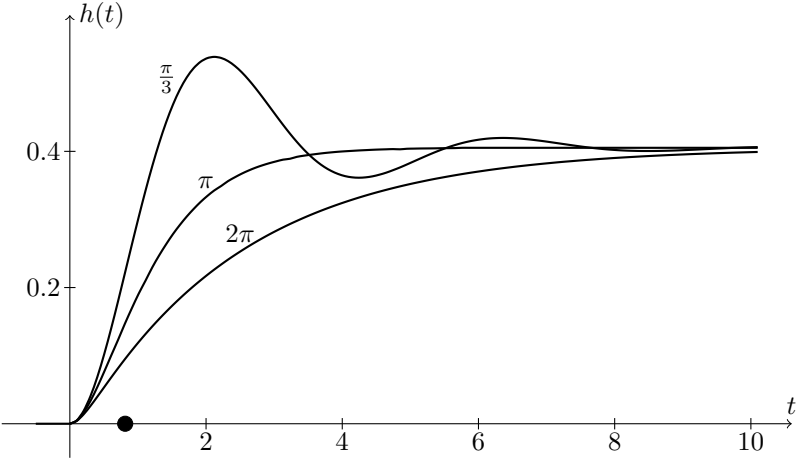
$h(t)$
$\frac{\pi}{3}$
π
2π
0.4
0.2
t
2
4
6
8
10

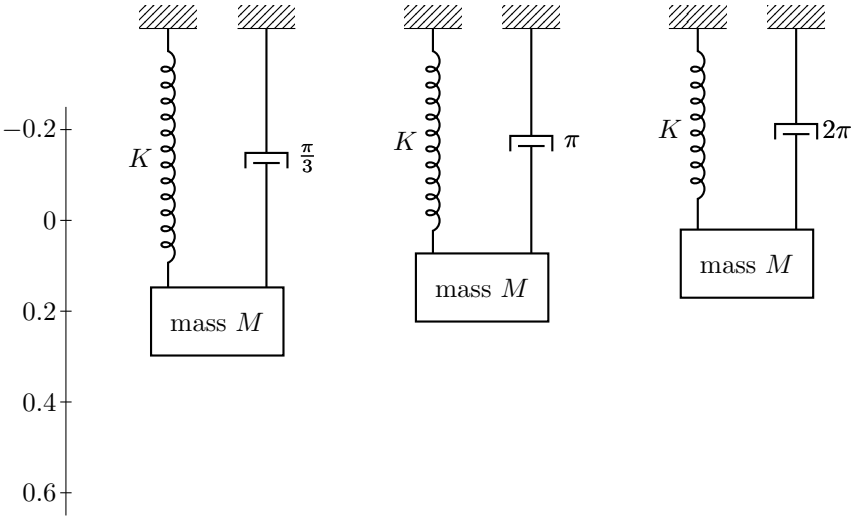
K
$\frac{\pi}{3}$
mass M
K
π
mass M
K
2π
mass M
−0.2
0
0.2
0.4
0.6

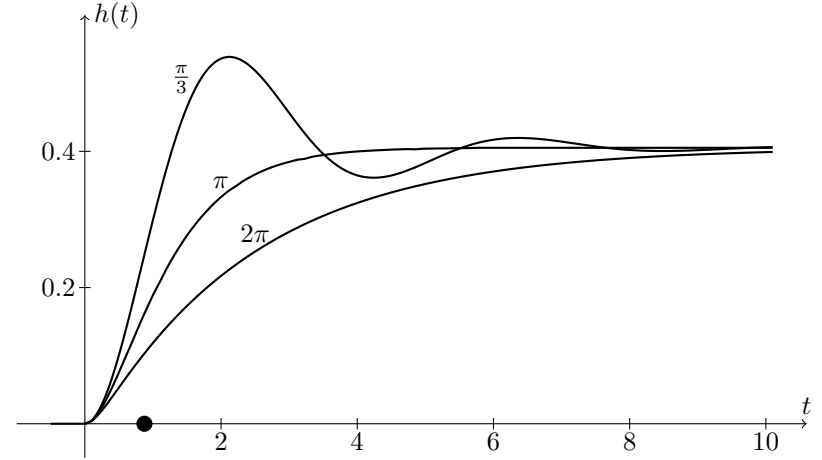
$h(t)$
$\frac{\pi}{3}$
π
2π
0.4
0.2
t
2
4
6
8
10

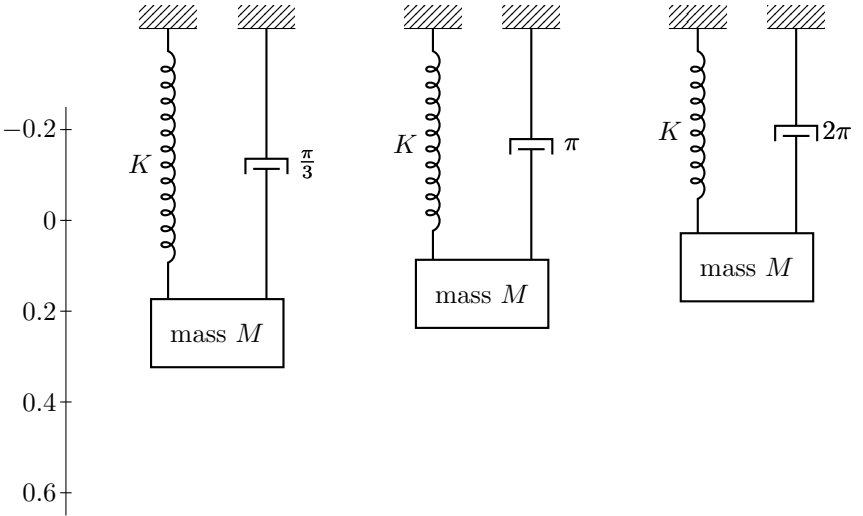
K
$\frac{\pi}{3}$
mass M
K
π
mass M
K
2π
mass M
−0.2
0
0.2
0.4
0.6

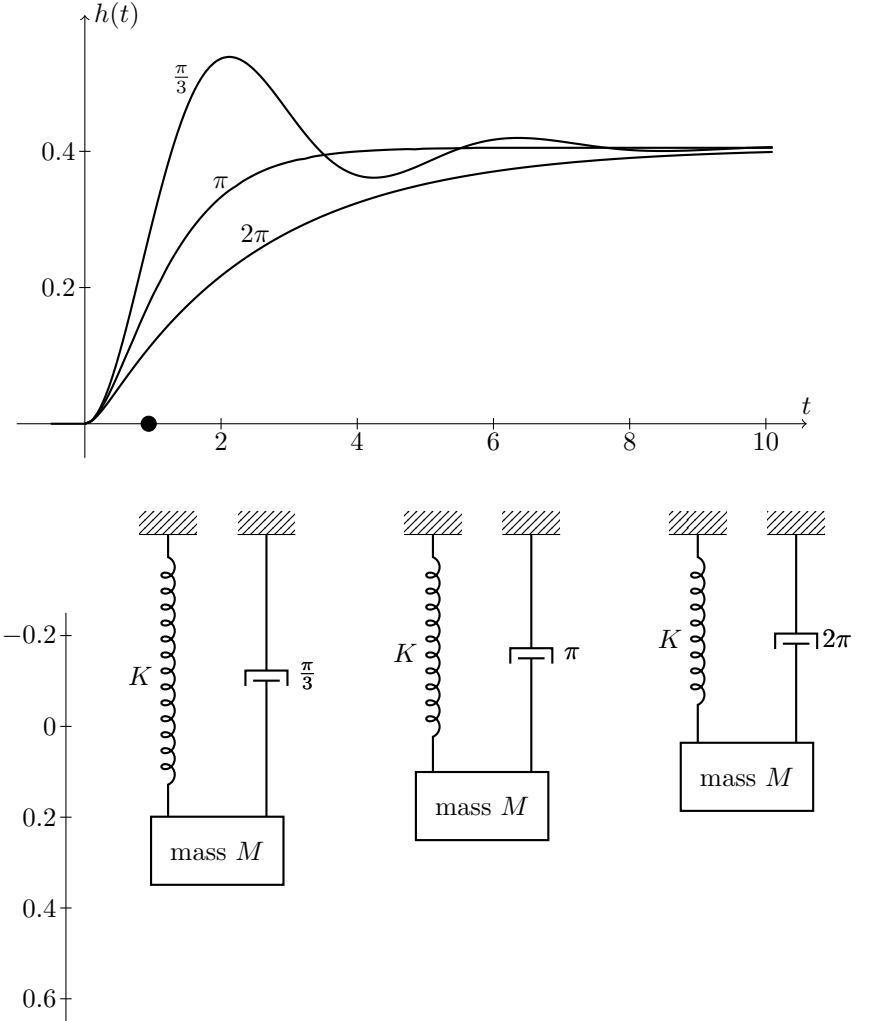
$h(t)$
$\frac{\pi}{3}$
π
2π
0.4
0.2
t
2
4
6
8
10
K
$\frac{\pi}{3}$
mass M
K
π
mass M
K
2π
mass M
−0.2
0
0.2
0.4
0.6

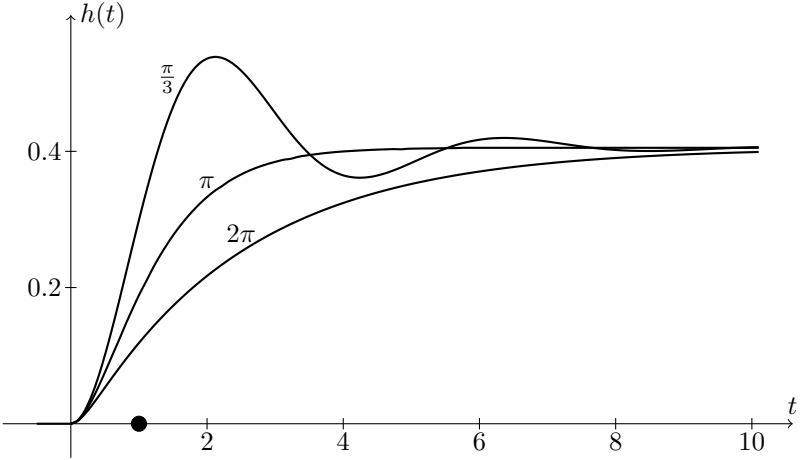
$h(t)$
$\frac{\pi}{3}$
π
2π
0.4
0.2
t
2
4
6
8
10

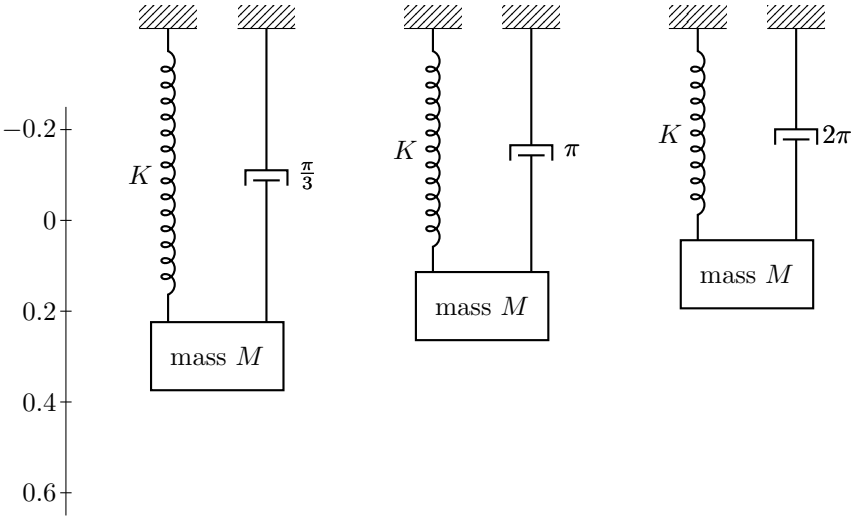
K
$\frac{\pi}{3}$
mass M
K
π
mass M
K
2π
mass M
−0.2
0
0.2
0.4
0.6

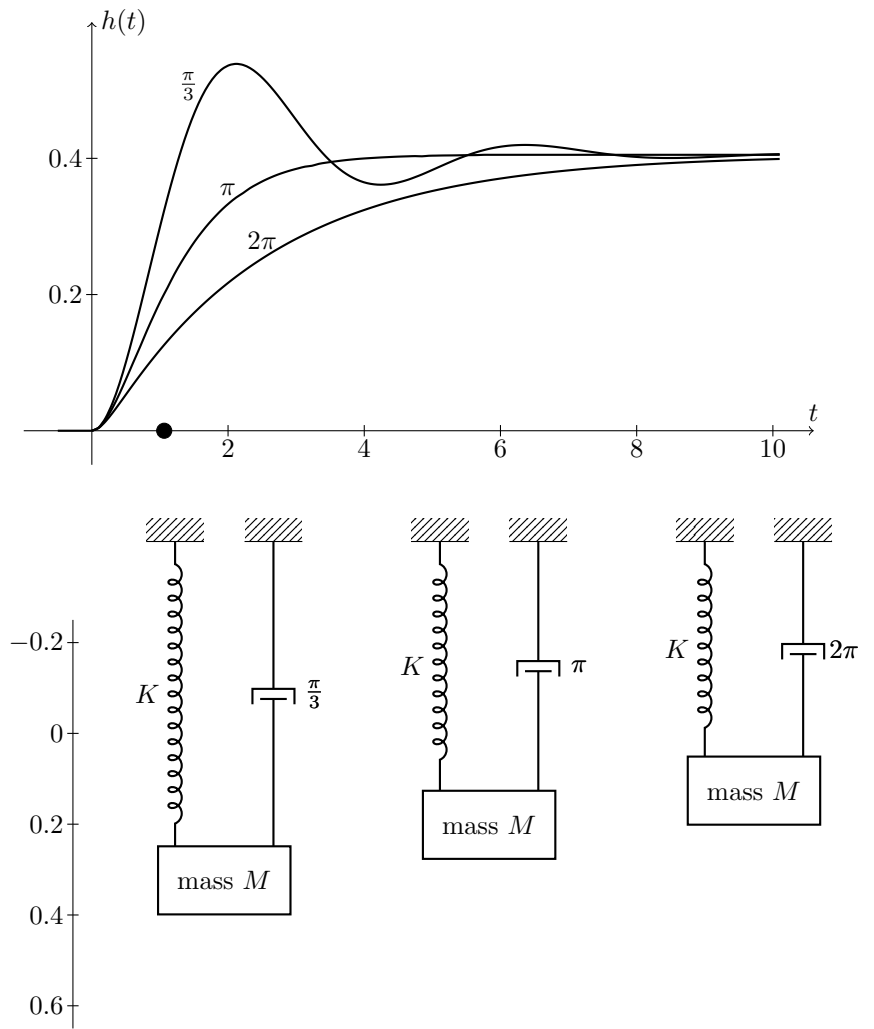
$h(t)$
$\frac{\pi}{3}$
π
2π
0.4
0.2
t
2
4
6
8
10
K
$\frac{\pi}{3}$
mass M
K
π
mass M
K
2π
mass M
−0.2
0
0.2
0.4
0.6

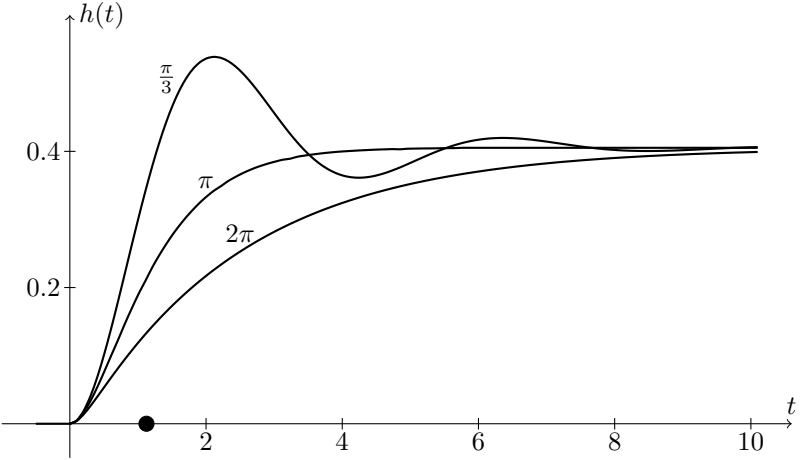
$h(t)$
$\frac{\pi}{3}$
π
2π
0.4
0.2
t
2
4
6
8
10

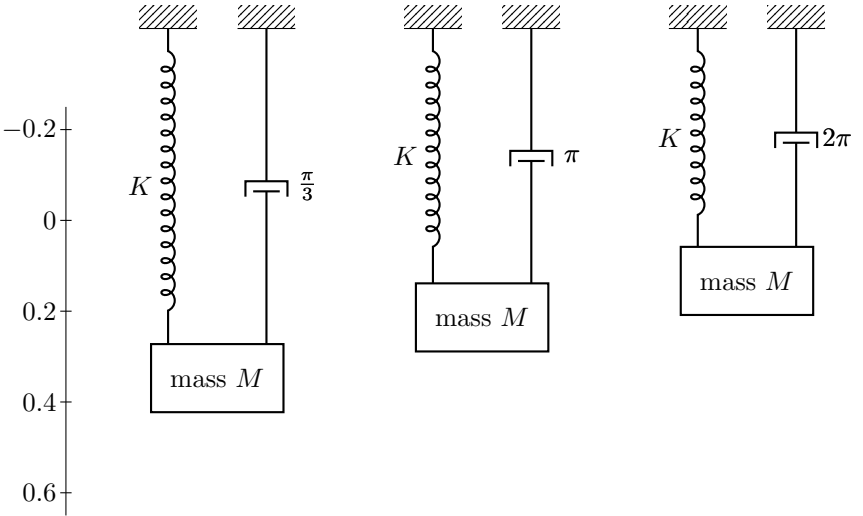
K
$\frac{\pi}{3}$
mass M
K
π
mass M
K
2π
mass M
−0.2
0
0.2
0.4
0.6

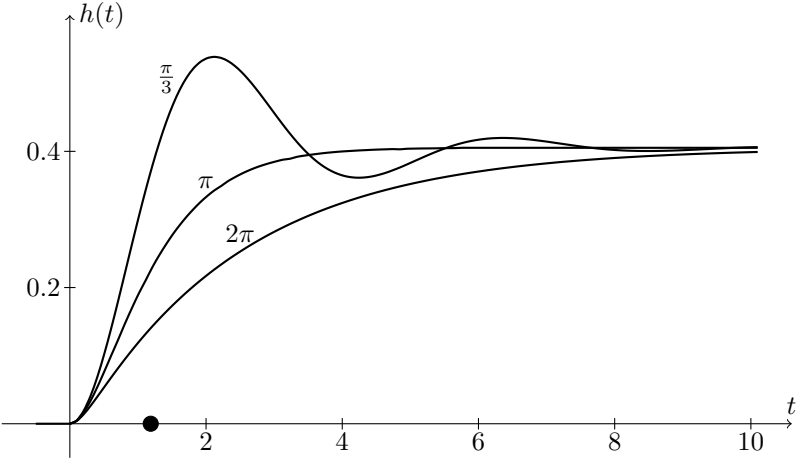
$h(t)$
$\frac{\pi}{3}$
π
2π
0.4
0.2
t
2
4
6
8
10

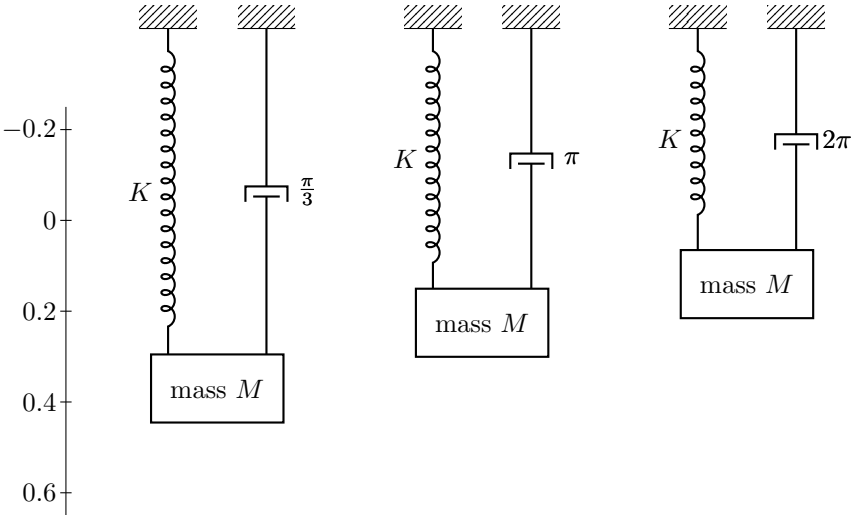
K
$\frac{\pi}{3}$
mass M
K
π
mass M
K
2π
mass M
−0.2
0
0.2
0.4
0.6

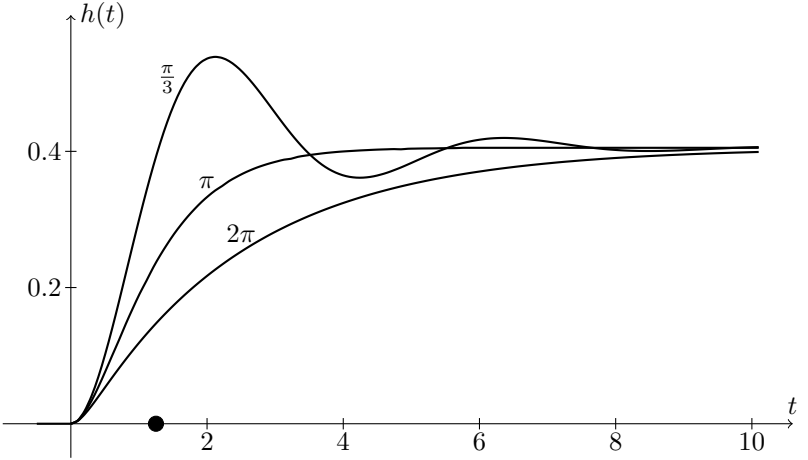
$h(t)$
$\frac{\pi}{3}$
π
2π
0.4
0.2
t
2
4
6
8
10

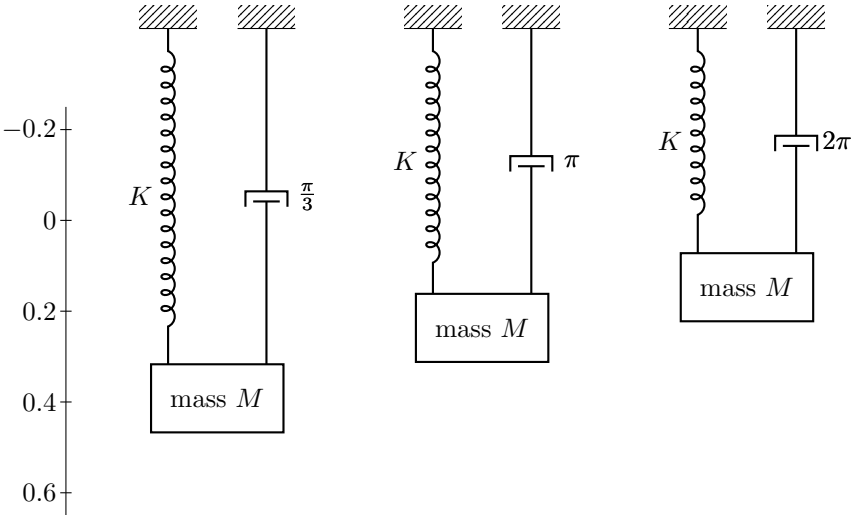
K
$\frac{\pi}{3}$
mass M
K
π
mass M
K
2π
mass M
−0.2
0
0.2
0.4
0.6

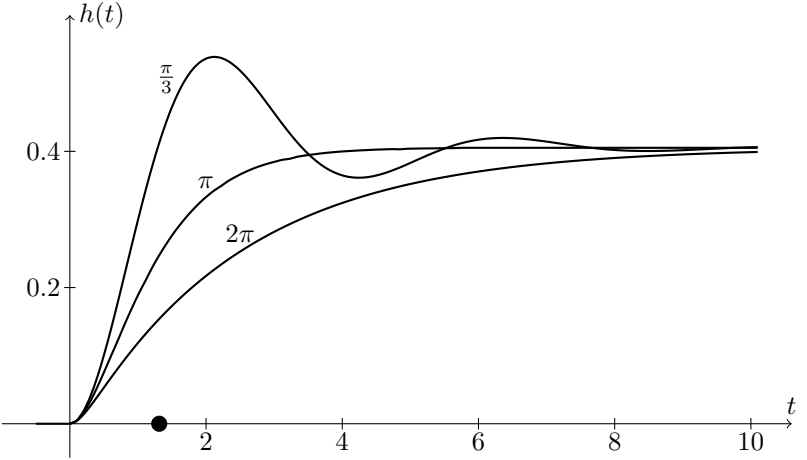
$h(t)$
$\frac{\pi}{3}$
π
2π
0.4
0.2
t
2
4
6
8
10

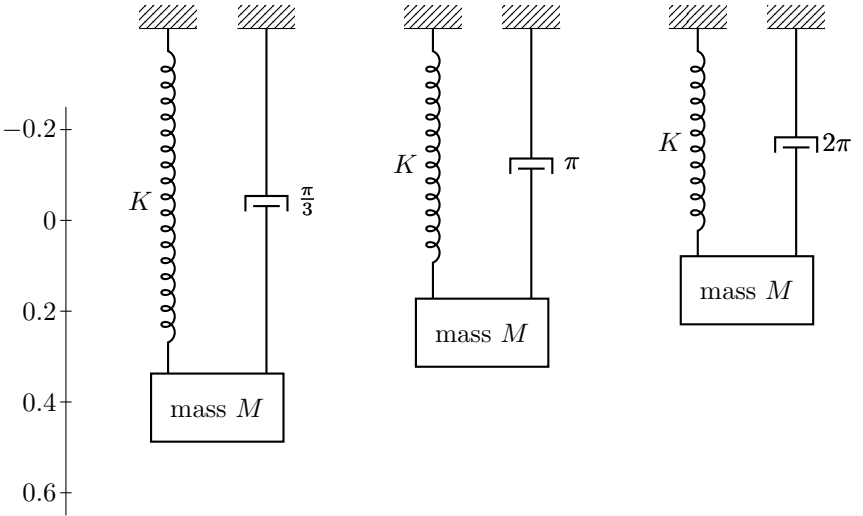
K
$\frac{\pi}{3}$
mass M
K
π
mass M
K
2π
mass M
−0.2
0
0.2
0.4
0.6

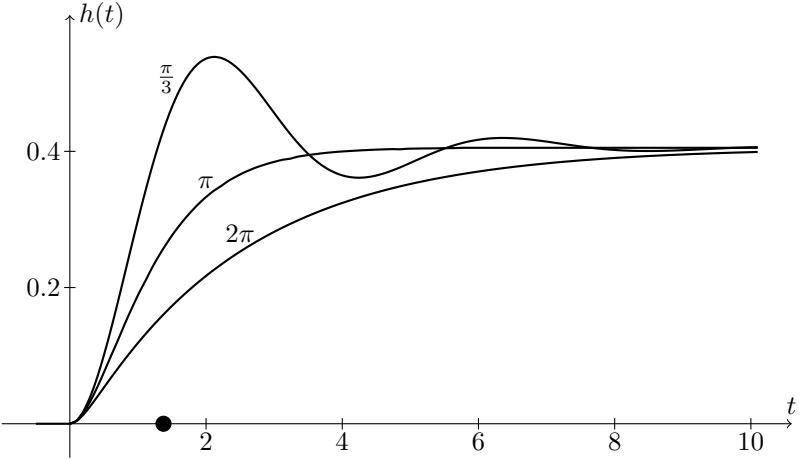
$h(t)$
$\frac{\pi}{3}$
π
2π
0.4
0.2
t
2
4
6
8
10

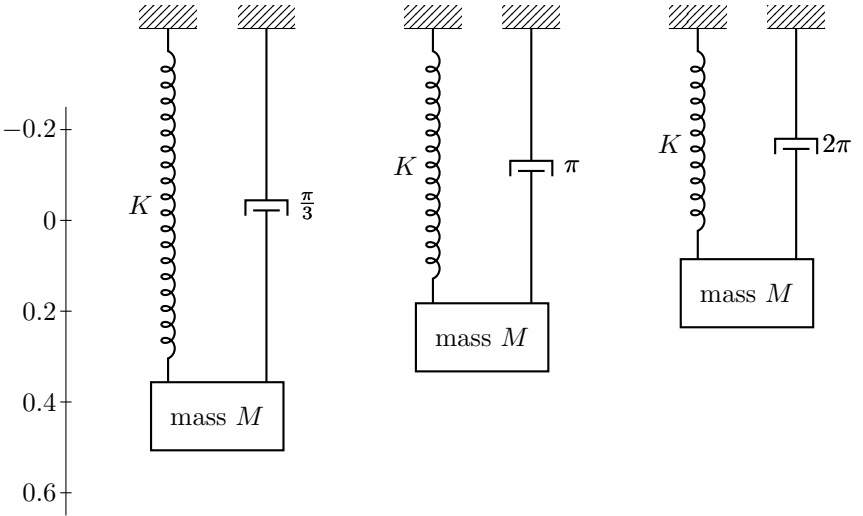
−0.2
0
0.2
0.4
0.6
K
$\frac{\pi}{3}$
mass M
K
π
mass M
K
2π
mass M

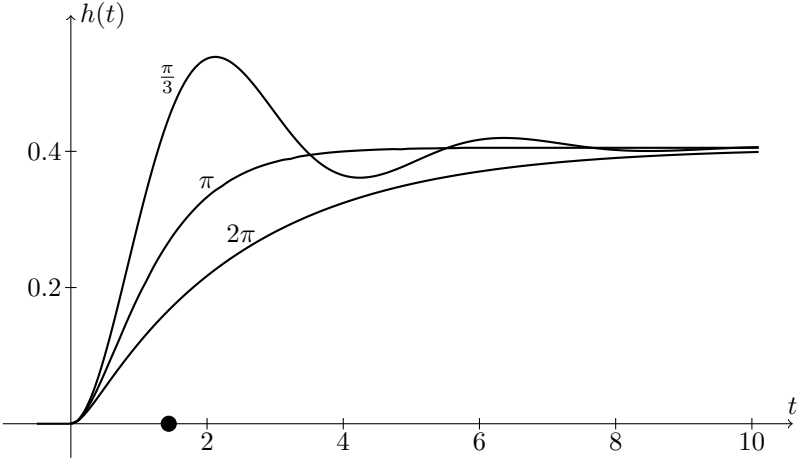
$h(t)$
$\frac{\pi}{3}$
π
2π
0.4
0.2
t
2
4
6
8
10

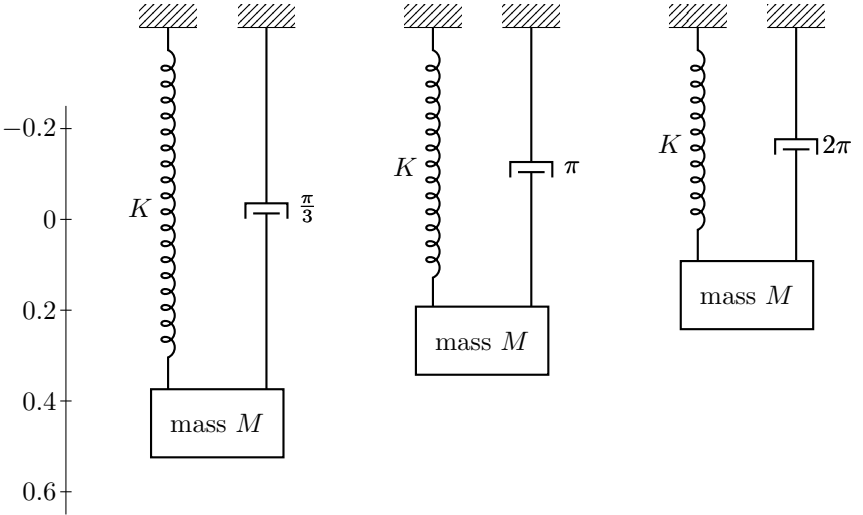
−0.2
0
0.2
0.4
0.6
K
$\frac{\pi}{3}$
mass M
K
π
mass M
K
2π
mass M

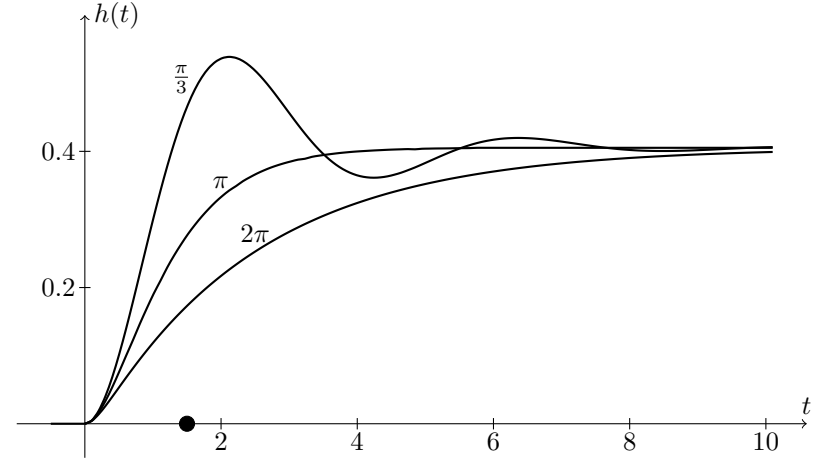
$h(t)$
$\frac{\pi}{3}$
π
2π
0.4
0.2
t
2
4
6
8
10

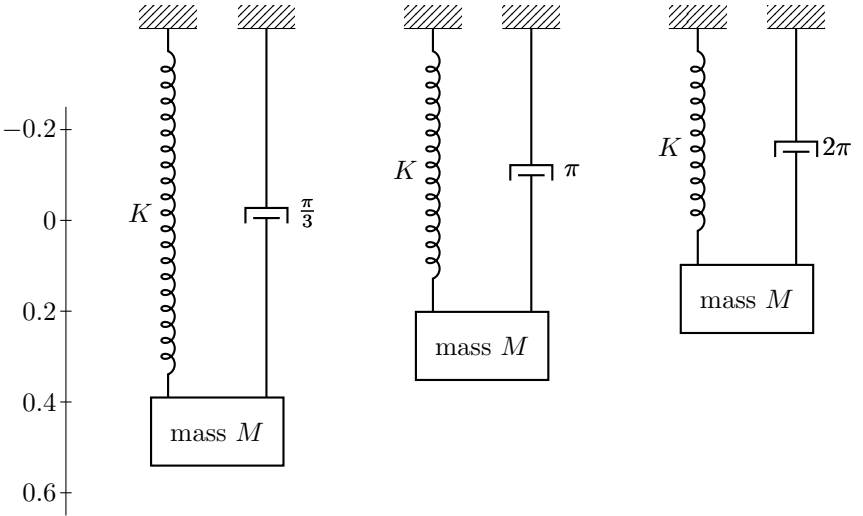
K
$\frac{\pi}{3}$
mass M
K
π
mass M
K
2π
mass M
−0.2
0
0.2
0.4
0.6

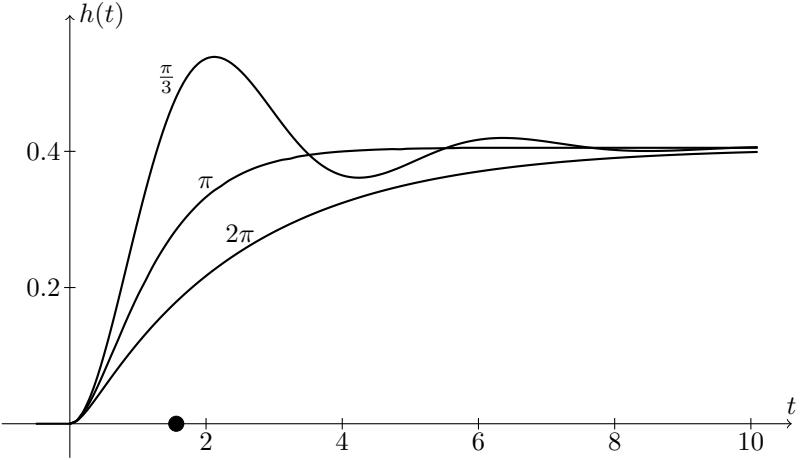
$h(t)$
$\frac{\pi}{3}$
π
2π
0.4
0.2
t
2
4
6
8
10

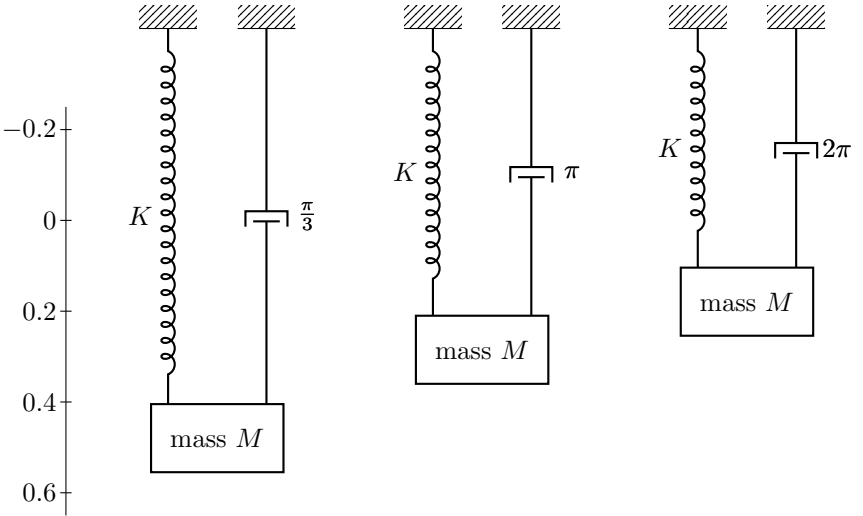
−0.2
0
0.2
0.4
0.6
K
$\frac{\pi}{3}$
mass M
K
π
mass M
K
2π
mass M

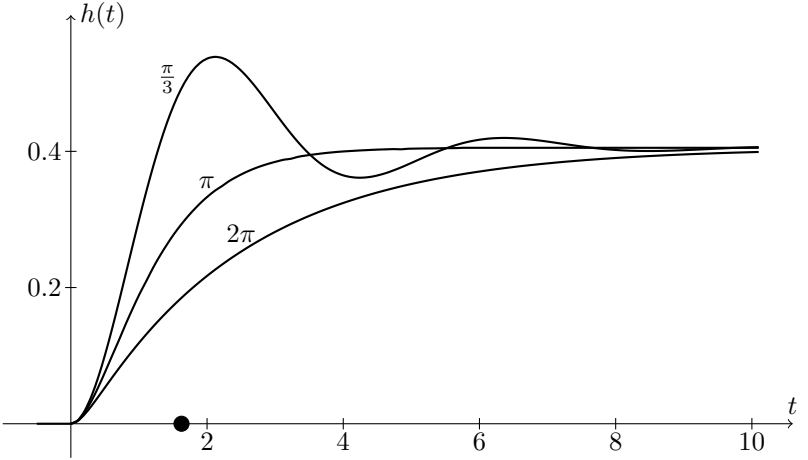
$h(t)$
$\frac{\pi}{3}$
π
2π
0.4
0.2
t
2
4
6
8
10

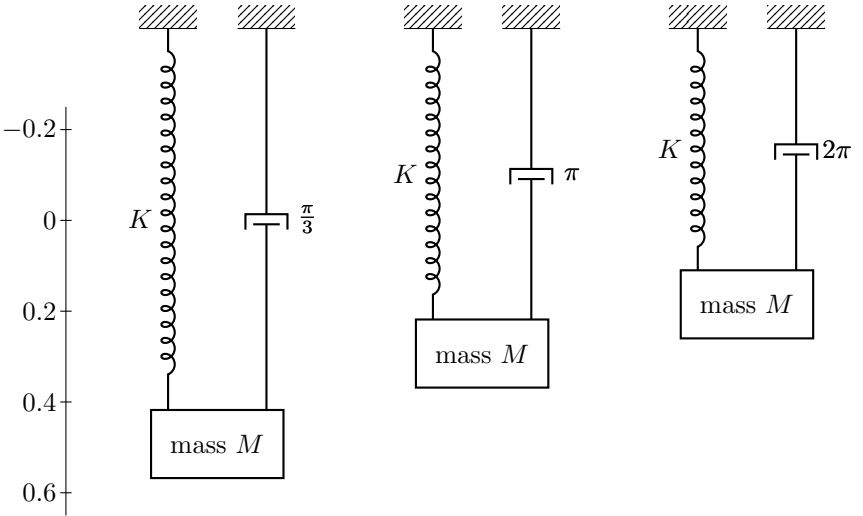
−0.2
0
0.2
0.4
0.6
K
$\frac{\pi}{3}$
mass M
K
π
mass M
K
2π
mass M

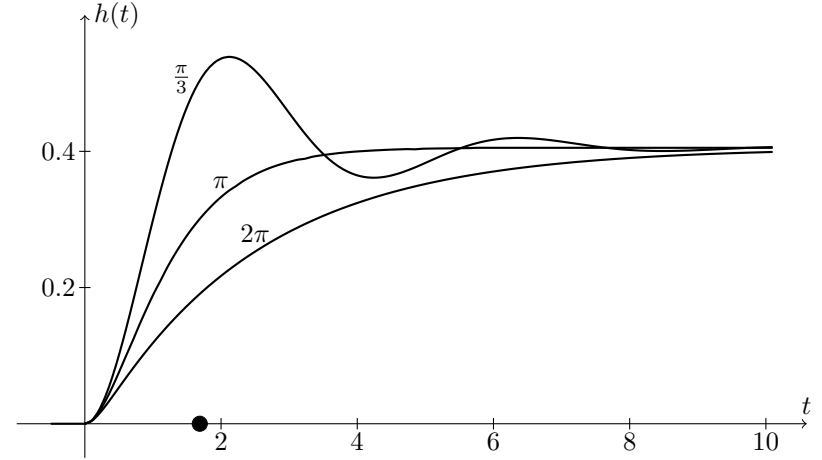
$h(t)$
$\frac{\pi}{3}$
π
2π
0.4
0.2
t
2
4
6
8
10

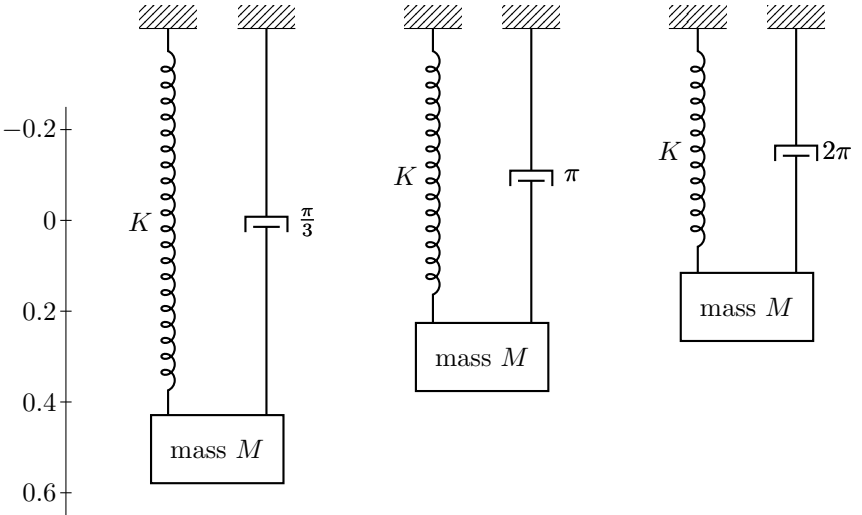
−0.2
0
0.2
0.4
0.6
K
$\frac{\pi}{3}$
mass M
K
π
mass M
K
2π
mass M

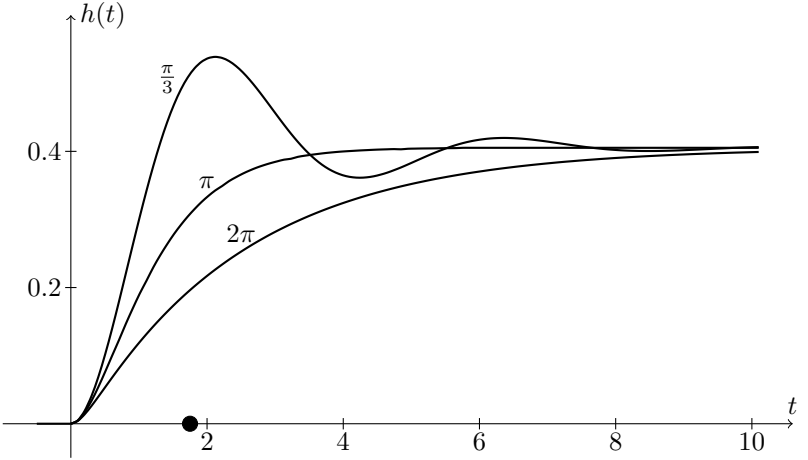
$h(t)$
$\frac{\pi}{3}$
π
2π
0.4
0.2
t
2
4
6
8
10

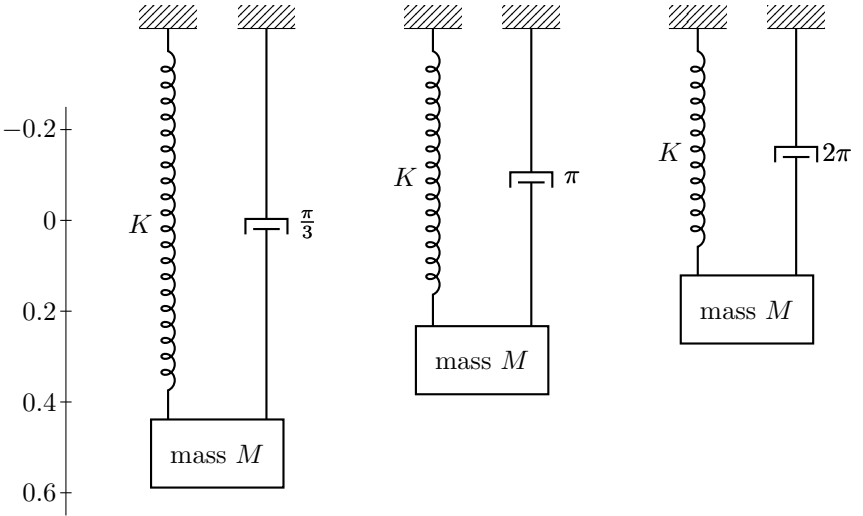
−0.2
0
0.2
0.4
0.6
K
$\frac{\pi}{3}$
mass M
K
π
mass M
K
2π
mass M

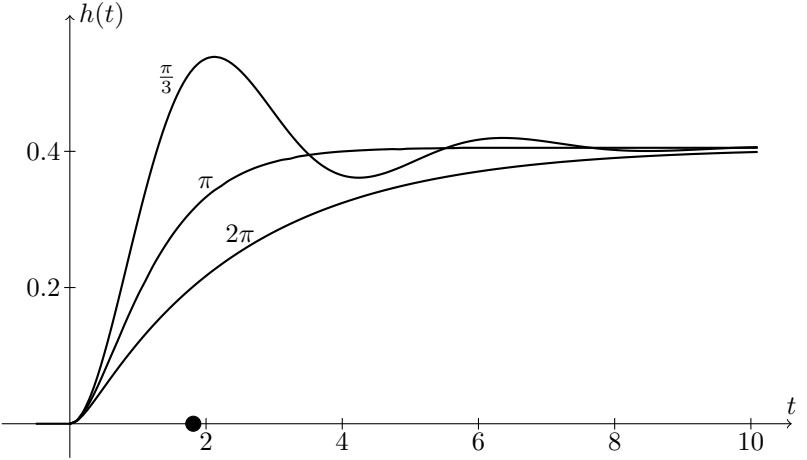
$h(t)$
$\frac{\pi}{3}$
π
2π
0.4
0.2
t
2
4
6
8
10

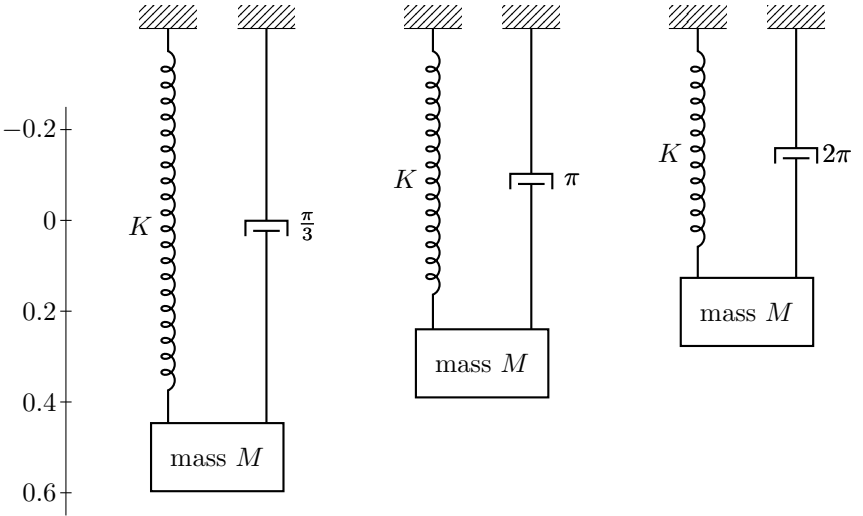
−0.2
0
0.2
0.4
0.6
K
$\frac{\pi}{3}$
mass M
K
π
mass M
K
2π
mass M

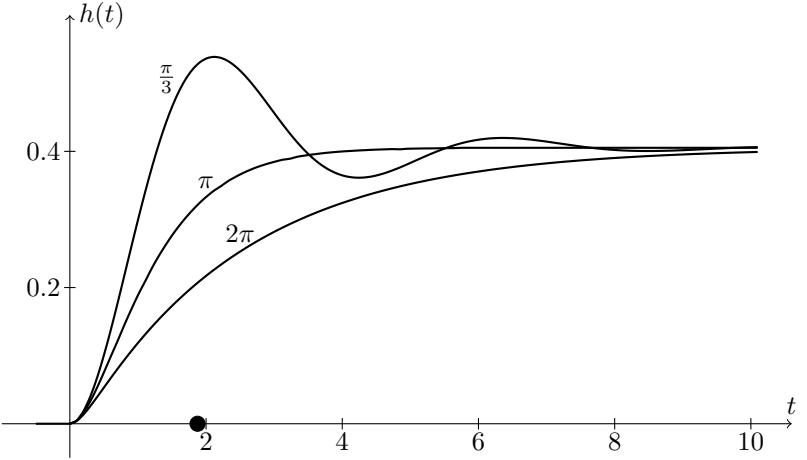
$h(t)$
$\frac{\pi}{3}$
π
2π
0.4
0.2
t
2
4
6
8
10

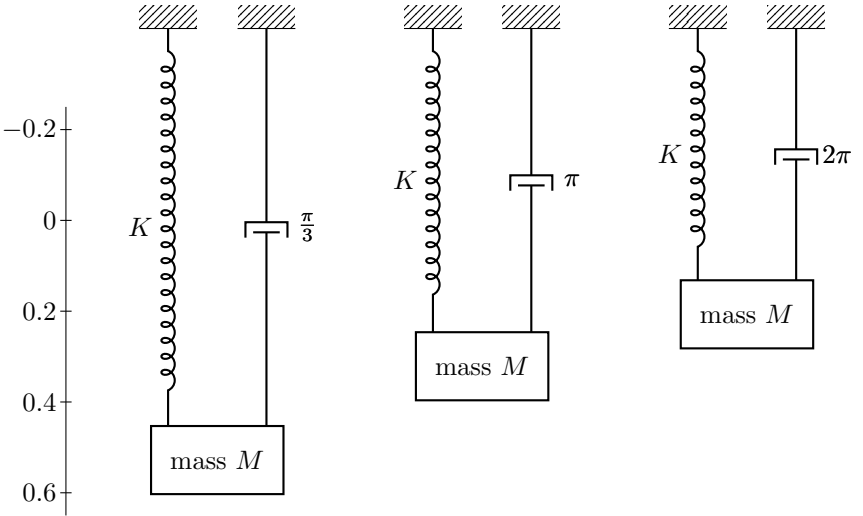
−0.2
0
0.2
0.4
0.6
K
$\frac{\pi}{3}$
mass M
K
π
mass M
K
2π
mass M

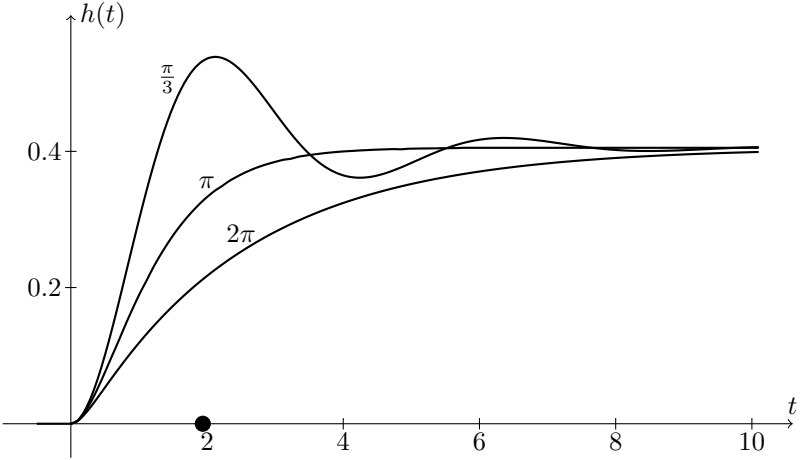
$h(t)$
$\frac{\pi}{3}$
π
2π
0.4
0.2
t
2
4
6
8
10

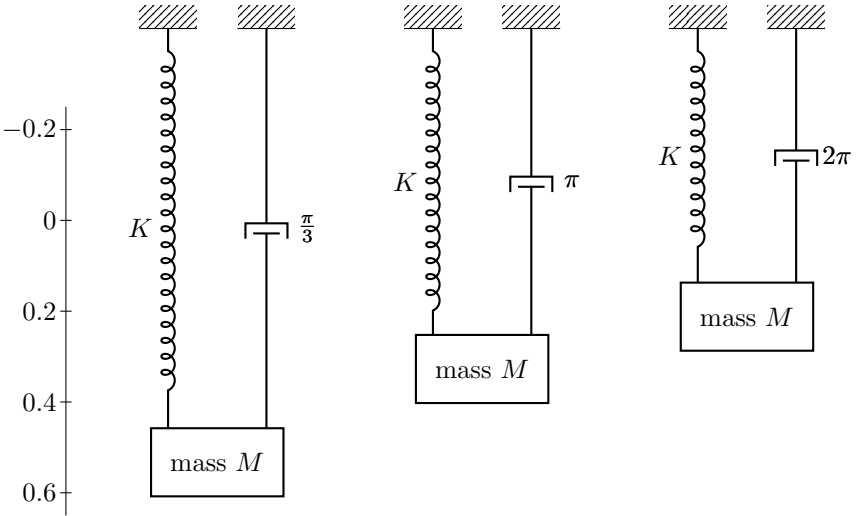
−0.2
0
0.2
0.4
0.6
K
$\frac{\pi}{3}$
mass M
K
π
mass M
K
2π
mass M

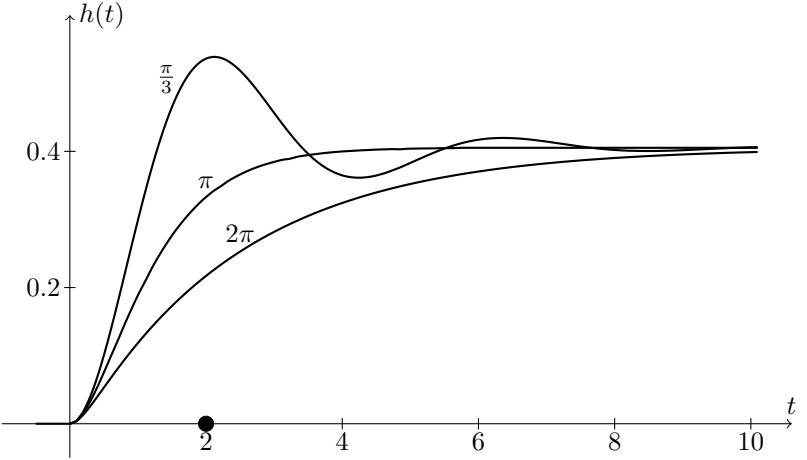
$h(t)$
$\frac{\pi}{3}$
π
2π
0.4
0.2
t
2
4
6
8
10

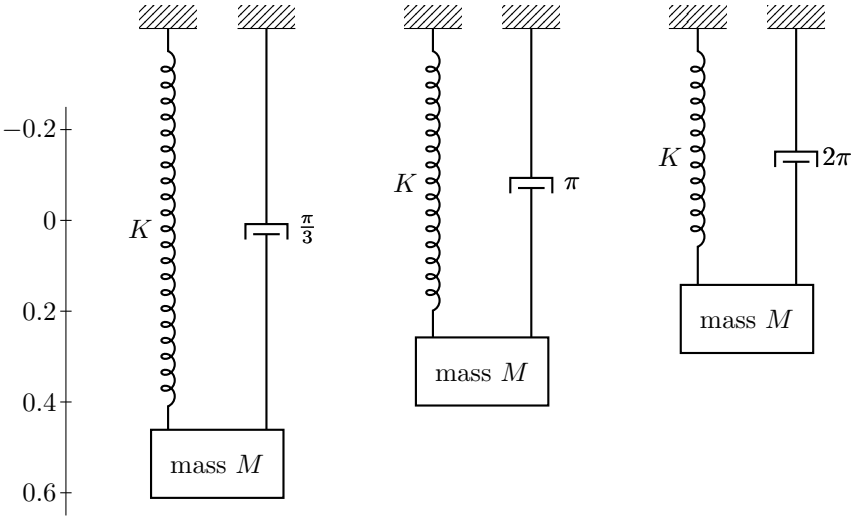
−0.2
0
0.2
0.4
0.6
K
$\frac{\pi}{3}$
mass M
K
π
mass M
K
2π
mass M

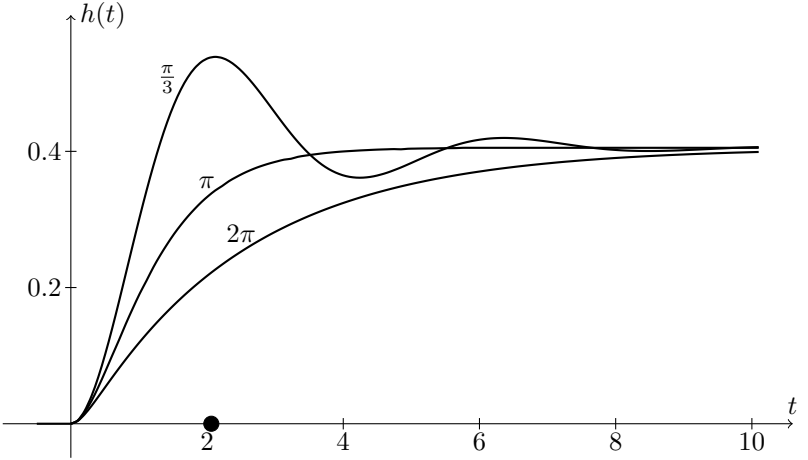
$h(t)$
$\frac{\pi}{3}$
π
2π
0.4
0.2
t
2
4
6
8
10

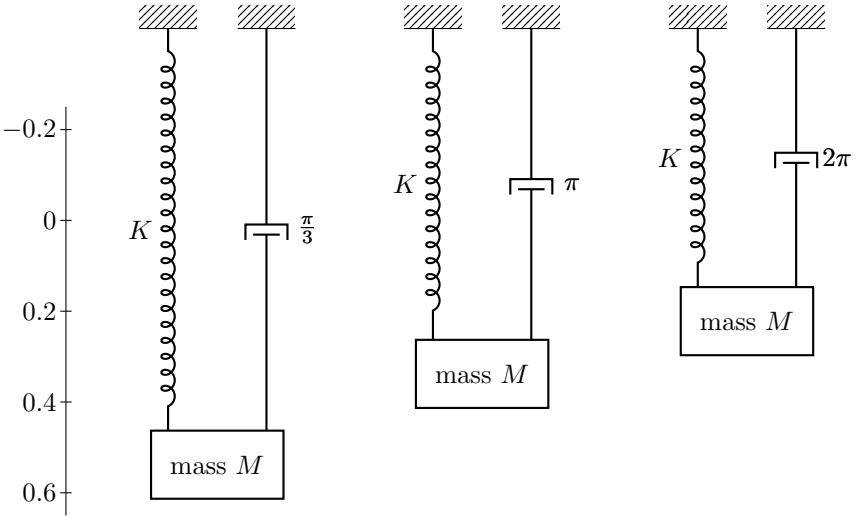
−0.2
0
0.2
0.4
0.6
K
$\frac{\pi}{3}$
mass M
K
π
mass M
K
2π
mass M

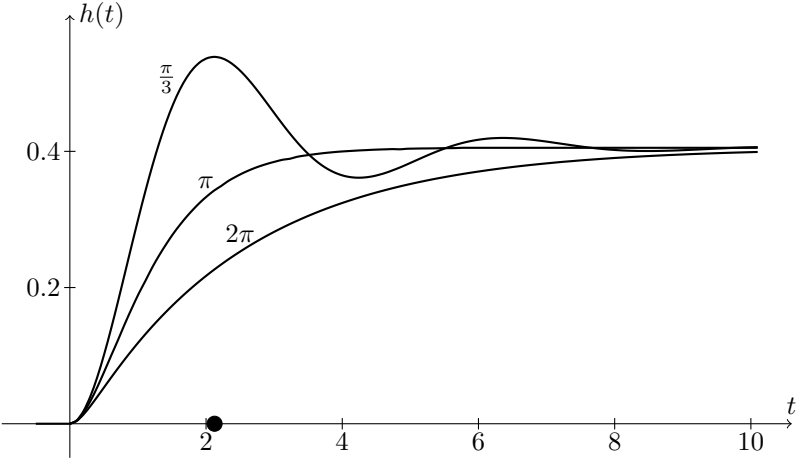
$h(t)$
$\frac{\pi}{3}$
π
2π
0.4
0.2
t
2
4
6
8
10

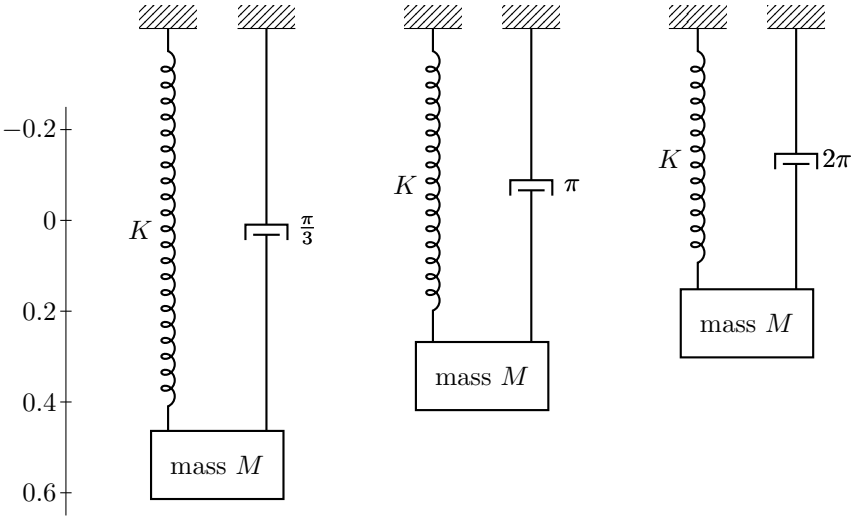
−0.2
0
0.2
0.4
0.6
K
$\frac{\pi}{3}$
mass M
K
π
mass M
K
2π
mass M

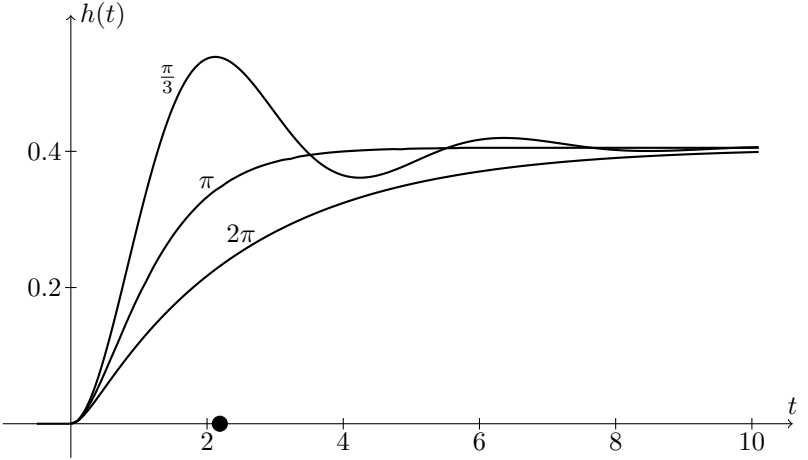
$h(t)$
$\frac{\pi}{3}$
π
2π
0.4
0.2
t
2
4
6
8
10

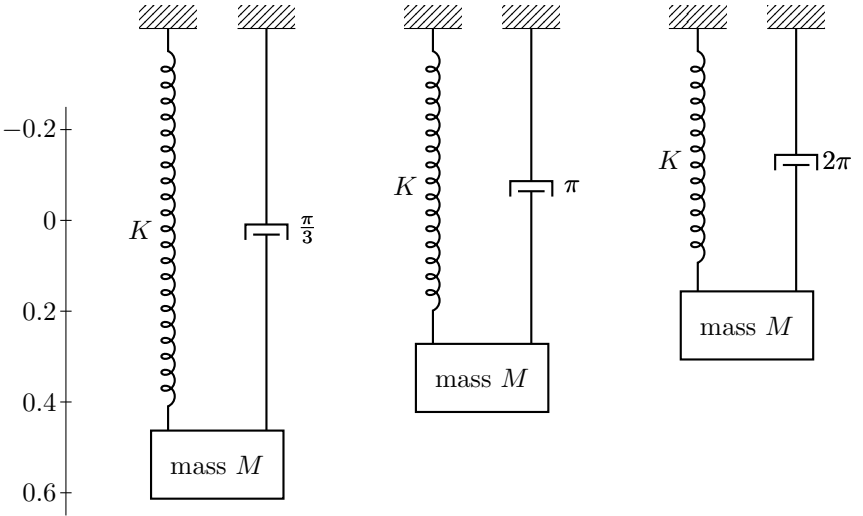
−0.2
0
0.2
0.4
0.6
K
$\frac{\pi}{3}$
mass M
K
π
mass M
K
2π
mass M

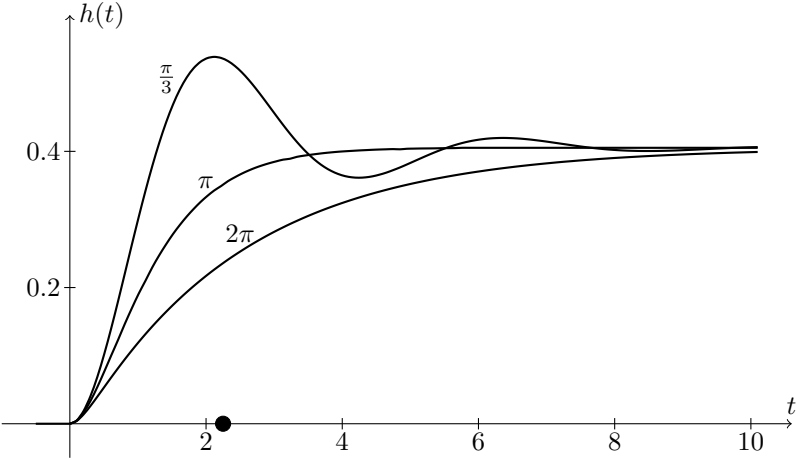
$h(t)$
$\frac{\pi}{3}$
π
2π
0.4
0.2
t
2
4
6
8
10

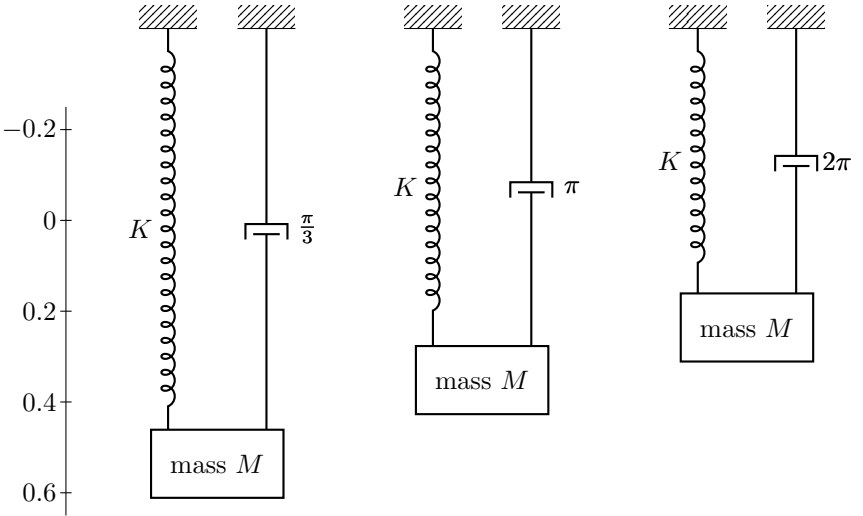
−0.2
0
0.2
0.4
0.6
K
$\frac{\pi}{3}$
mass M
K
π
mass M
K
2π
mass M

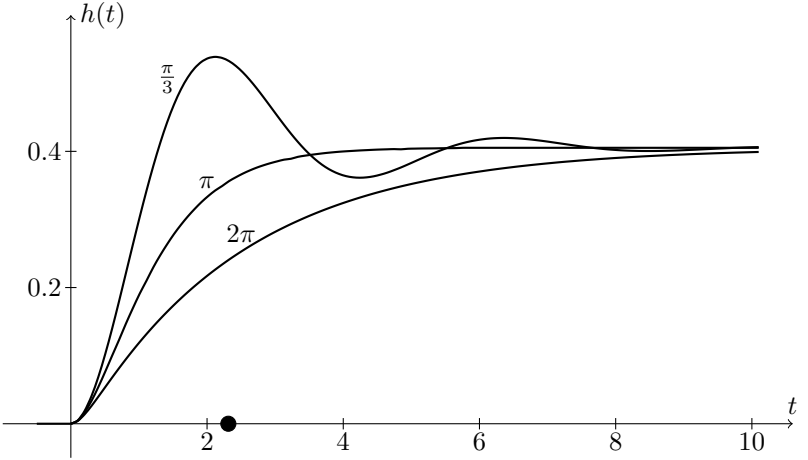
$h(t)$
$\frac{\pi}{3}$
π
2π
0.4
0.2
t
2
4
6
8
10

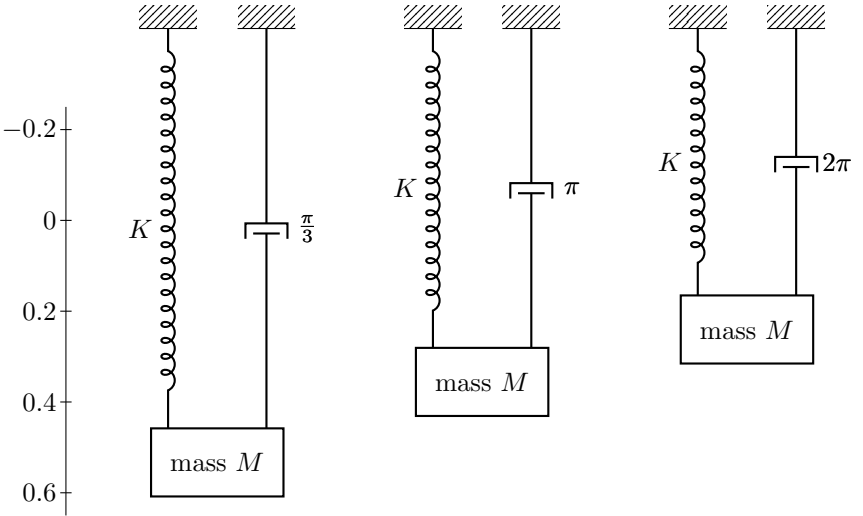
−0.2
0
0.2
0.4
0.6
K
$\frac{\pi}{3}$
mass M
K
π
mass M
K
2π
mass M

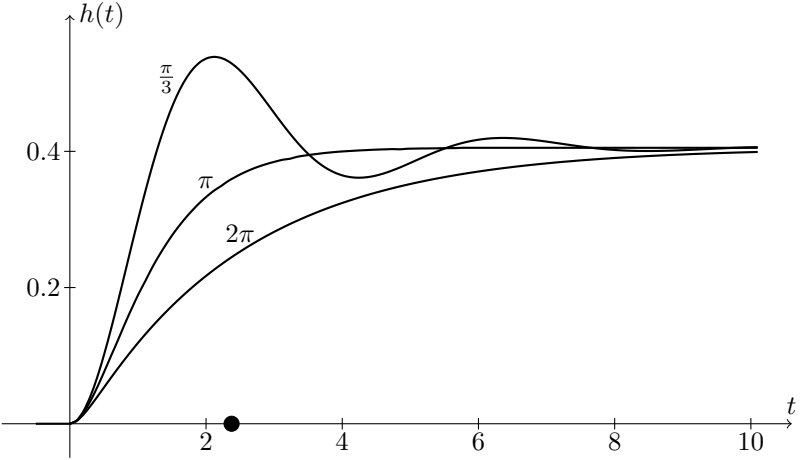
$h(t)$
$\frac{\pi}{3}$
π
2π
0.4
0.2
t
2
4
6
8
10

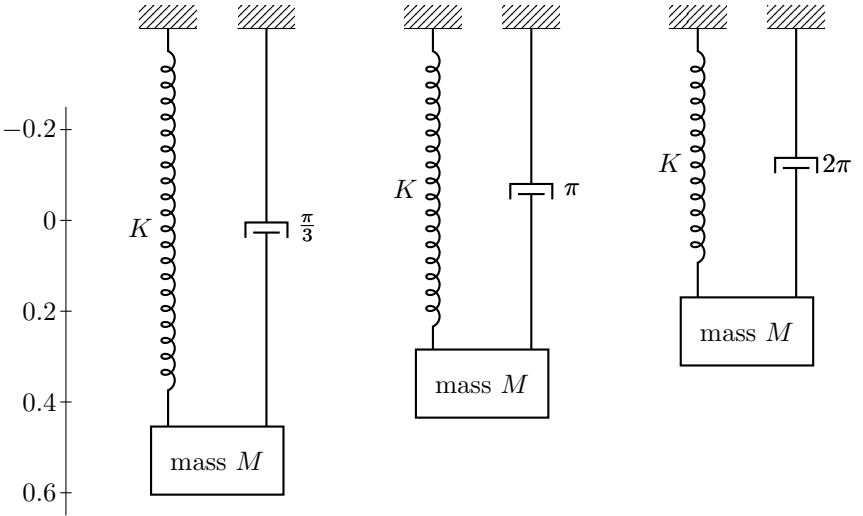
−0.2
0
0.2
0.4
0.6
K
$\frac{\pi}{3}$
mass M
K
π
mass M
K
2π
mass M

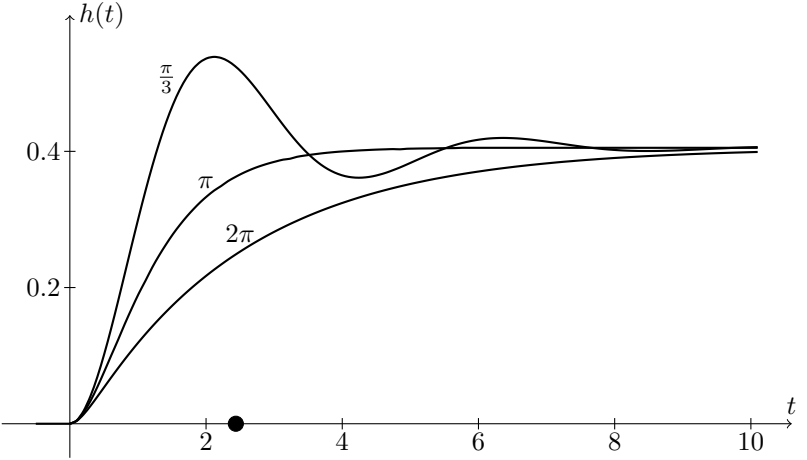
$h(t)$
$\frac{\pi}{3}$
π
2π
0.4
0.2
t
2
4
6
8
10

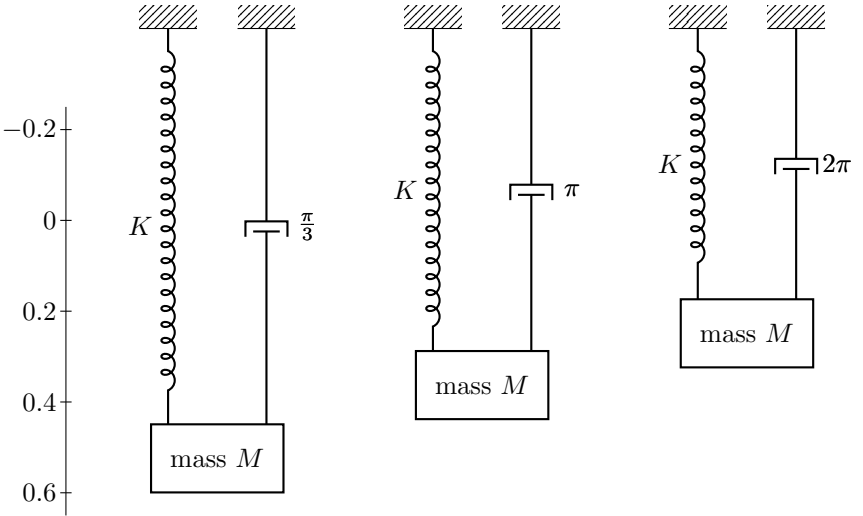
−0.2
0
0.2
0.4
0.6
K
$\frac{\pi}{3}$
mass M
K
π
mass M
K
2π
mass M

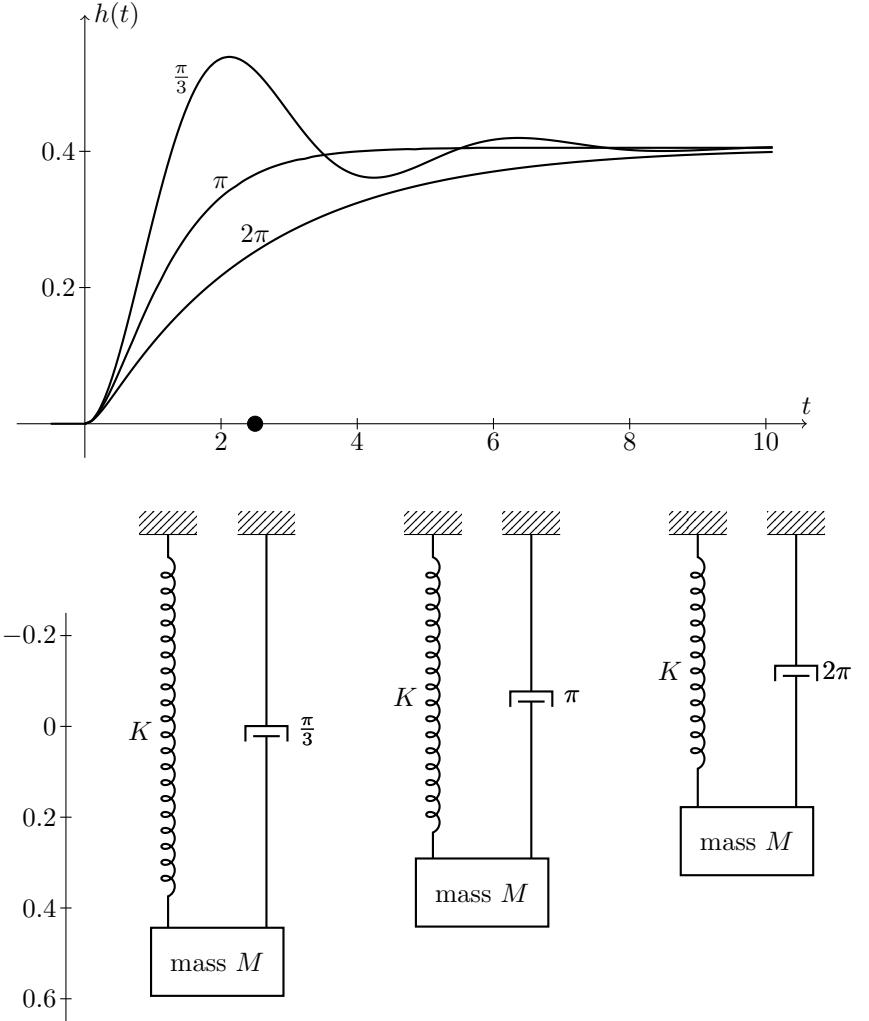
h(t)
π/3
π
2π
0.4
0.2
t
2
4
6
8
10
−0.2
0
0.2
0.4
0.6
K
π/3
mass M
K
π
mass M
K
2π
mass M

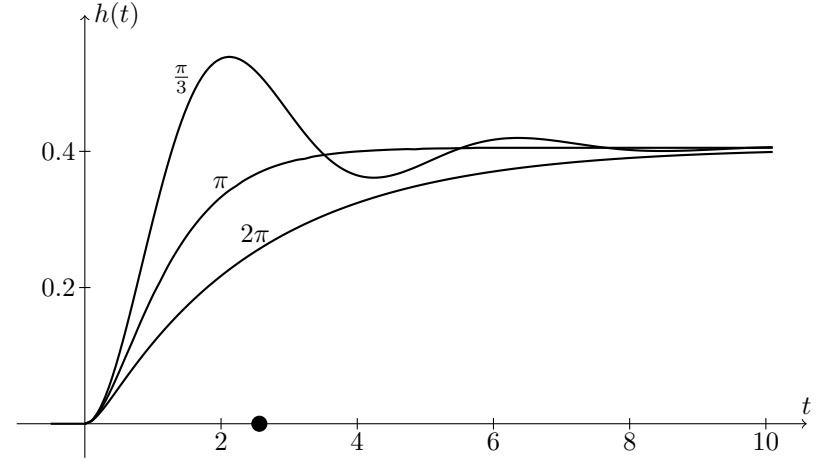
$h(t)$
$\frac{\pi}{3}$
π
2π
0.4
0.2
t
2
4
6
8
10

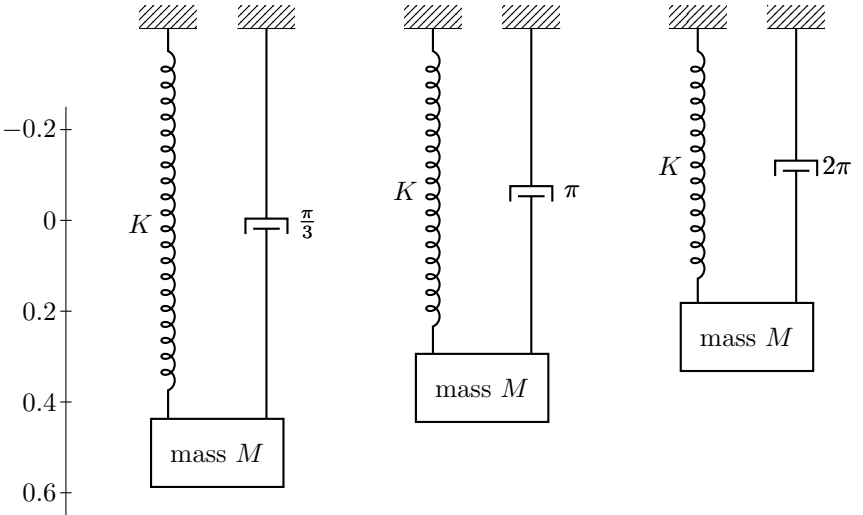
−0.2
0
0.2
0.4
0.6
K
$\frac{\pi}{3}$
mass M
K
π
mass M
K
2π
mass M

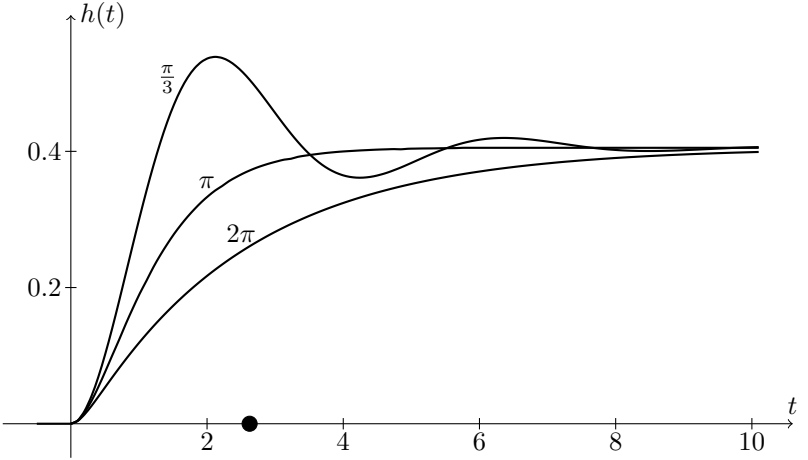
$h(t)$
$\frac{\pi}{3}$
π
2π
0.4
0.2
t
2
4
6
8
10

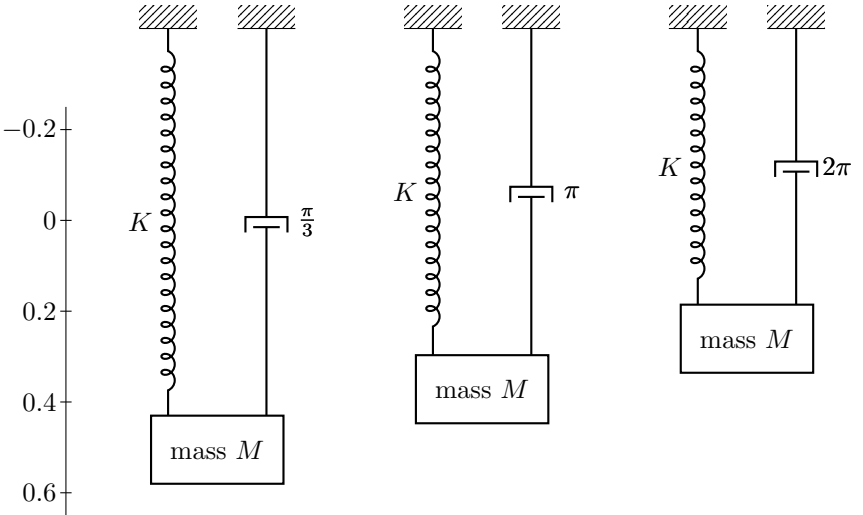
−0.2
0
0.2
0.4
0.6
K
$\frac{\pi}{3}$
mass M
K
π
mass M
K
2π
mass M

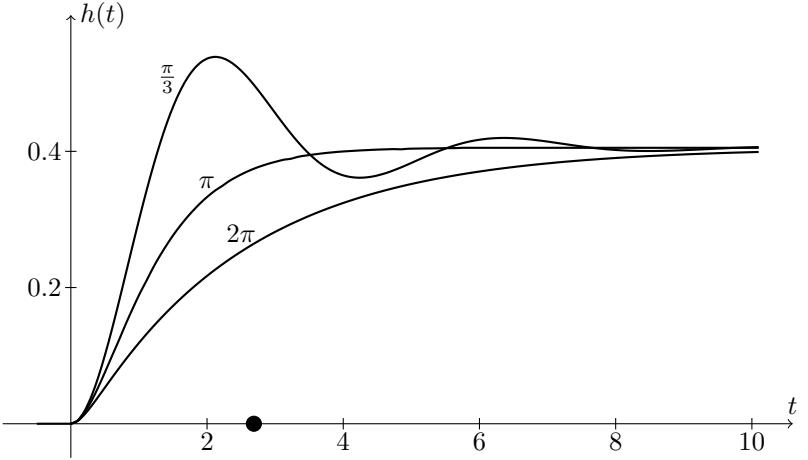
$h(t)$
$\frac{\pi}{3}$
π
2π
0.4
0.2
t
2
4
6
8
10

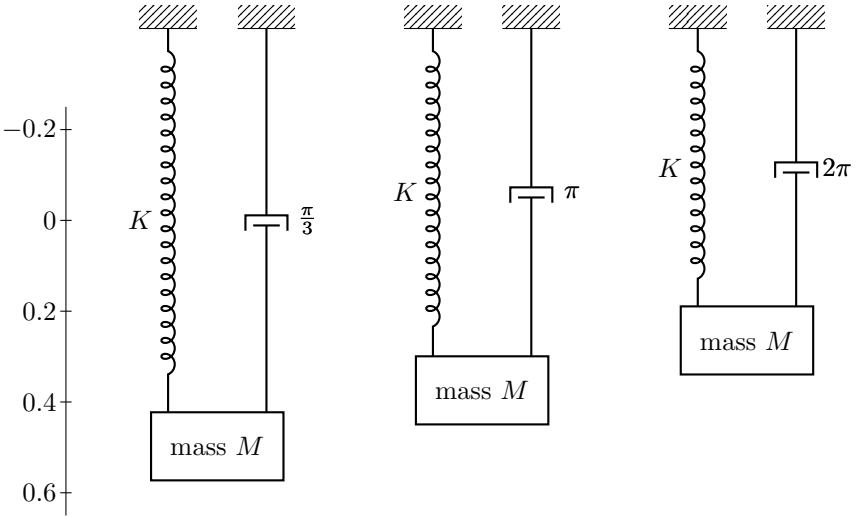
−0.2
0
0.2
0.4
0.6
K
$\frac{\pi}{3}$
mass M
K
π
mass M
K
2π
mass M

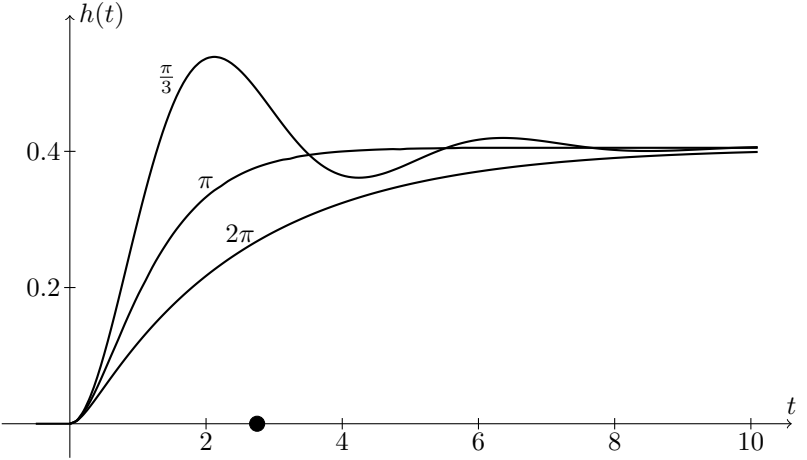
$h(t)$
$\frac{\pi}{3}$
π
2π
0.4
0.2
t
2
4
6
8
10

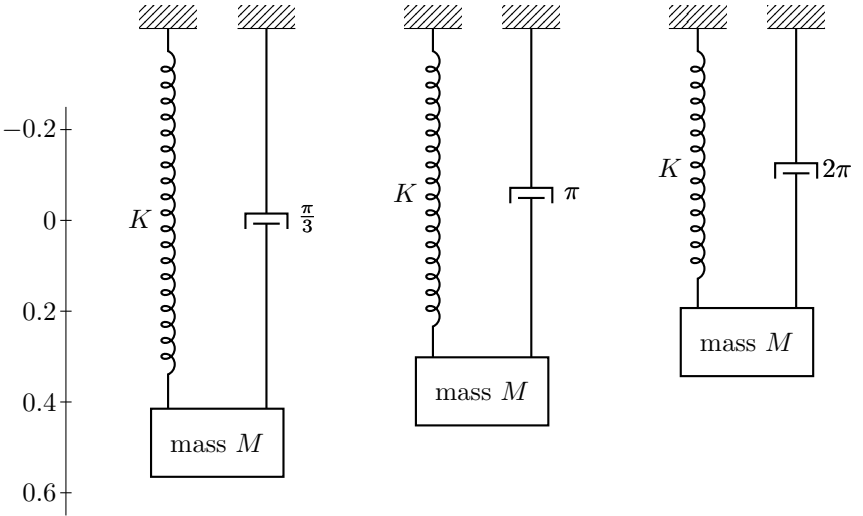
−0.2
0
0.2
0.4
0.6
K
$\frac{\pi}{3}$
mass M
K
π
mass M
K
2π
mass M

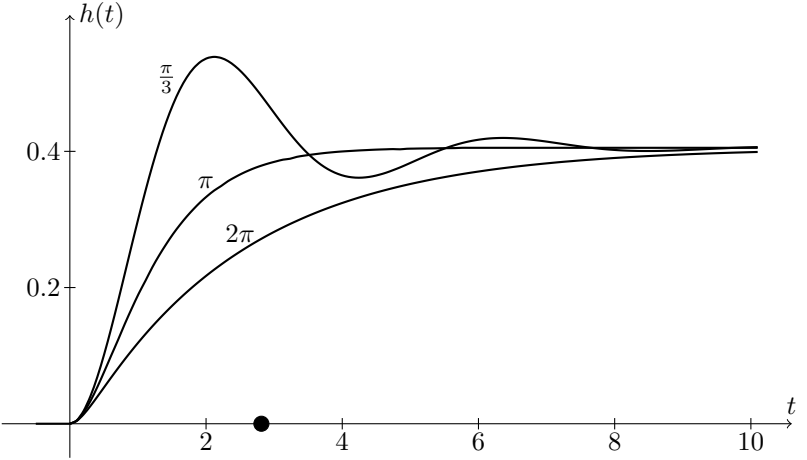
$h(t)$
$\frac{\pi}{3}$
π
2π
0.4
0.2
t
2
4
6
8
10

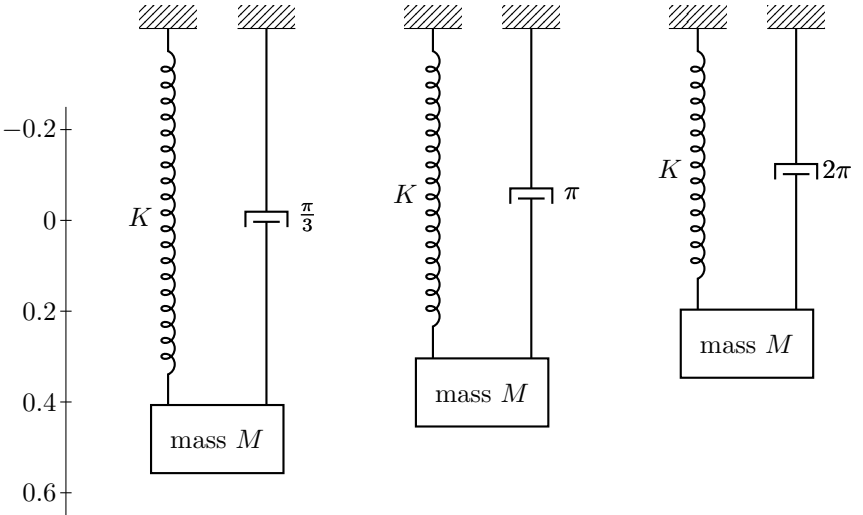
K
$\frac{\pi}{3}$
mass M
K
π
mass M
K
2π
mass M
−0.2
0
0.2
0.4
0.6

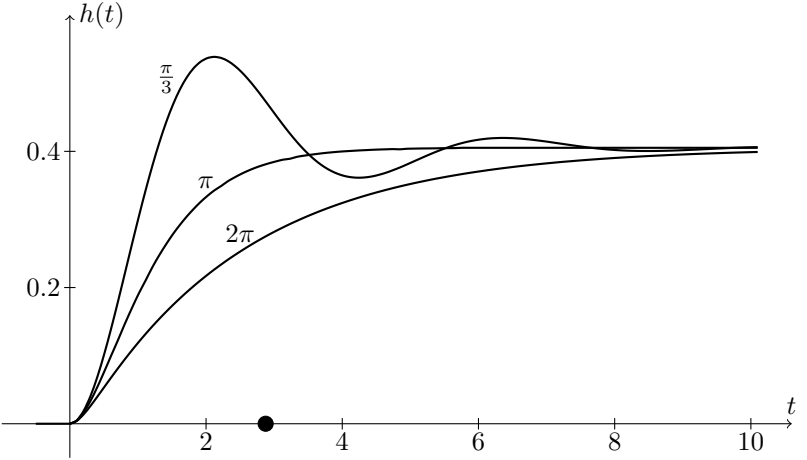
$h(t)$
$\frac{\pi}{3}$
π
2π
0.4
0.2
t
2
4
6
8
10

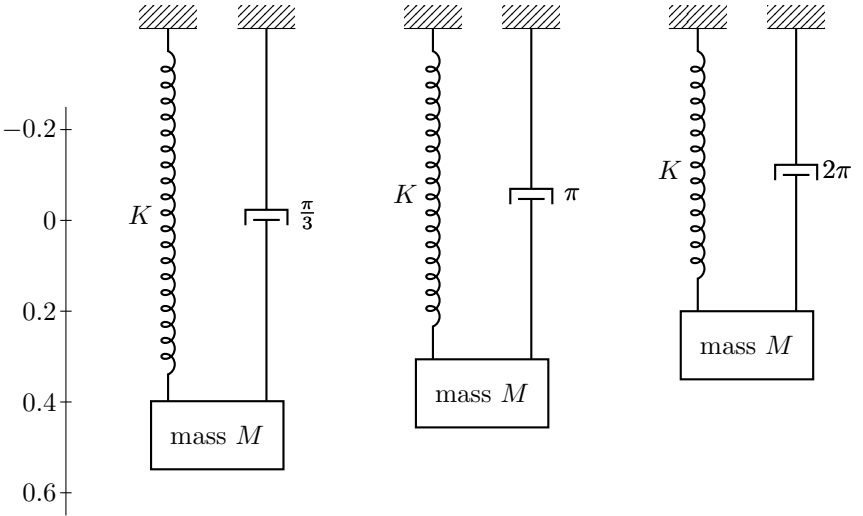
−0.2
0
0.2
0.4
0.6
K
$\frac{\pi}{3}$
mass M
K
π
mass M
K
2π
mass M

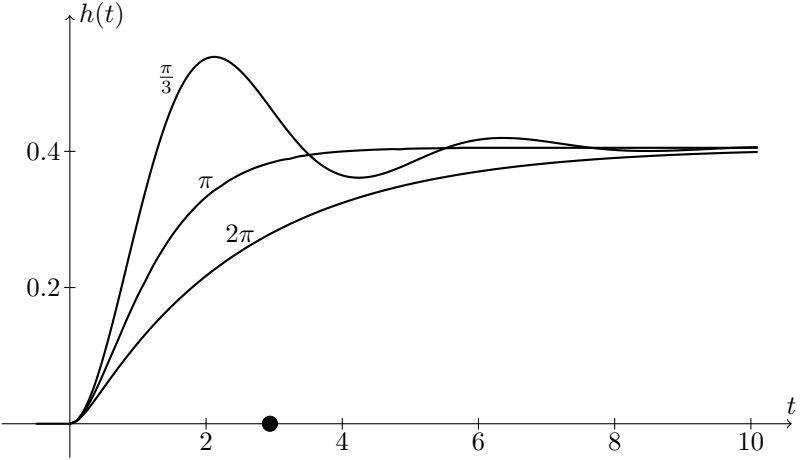
$h(t)$
$\frac{\pi}{3}$
π
2π
0.4
0.2
t
2
4
6
8
10

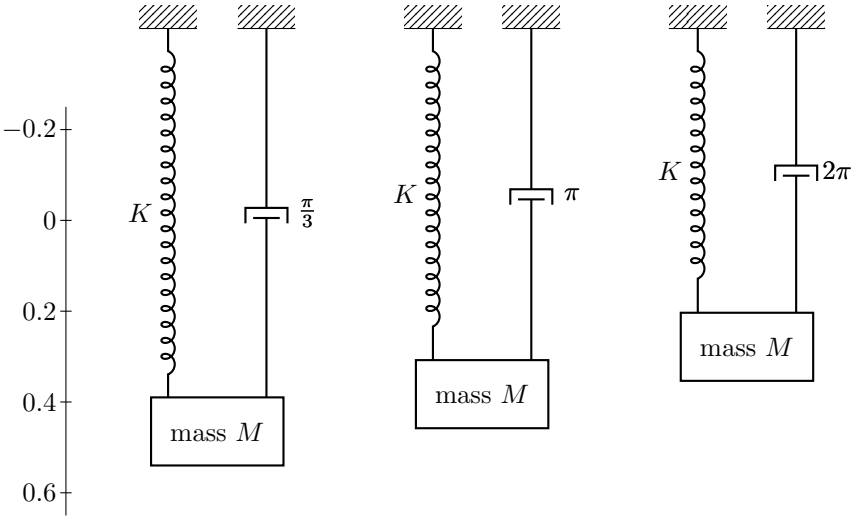
−0.2
0
0.2
0.4
0.6
K
$\frac{\pi}{3}$
mass M
K
π
mass M
K
2π
mass M

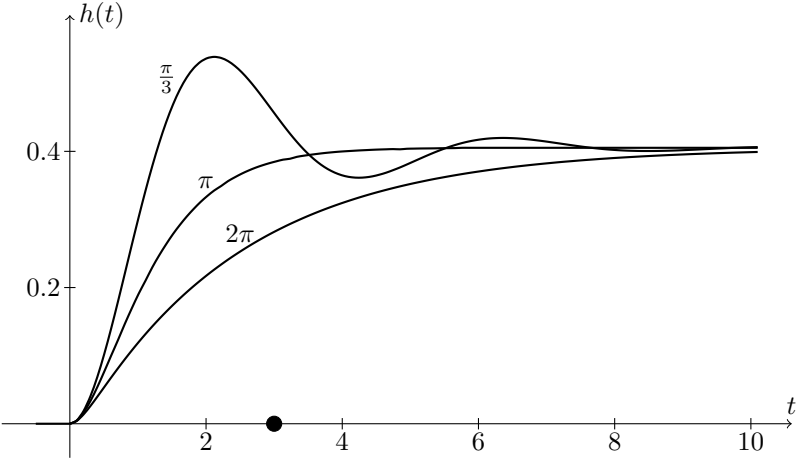
$h(t)$
$\frac{\pi}{3}$
π
2π
0.4
0.2
t
2
4
6
8
10

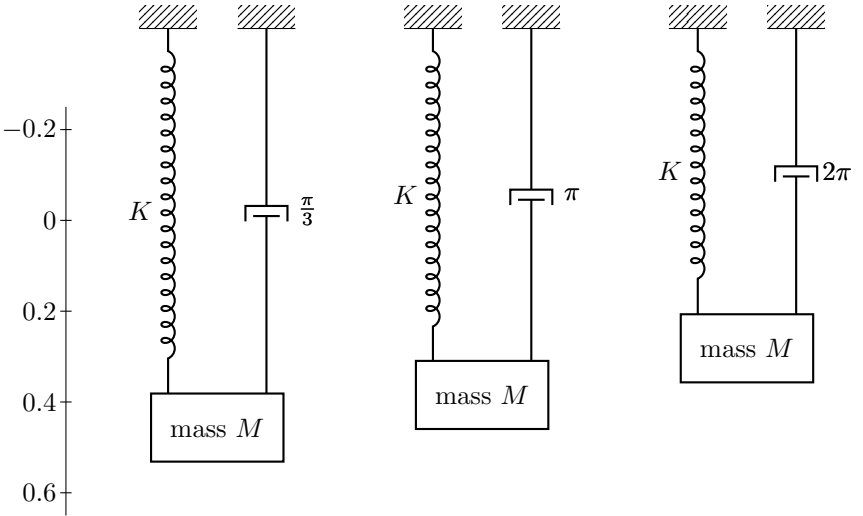
−0.2
0
0.2
0.4
0.6
K
$\frac{\pi}{3}$
mass M
K
π
mass M
K
2π
mass M

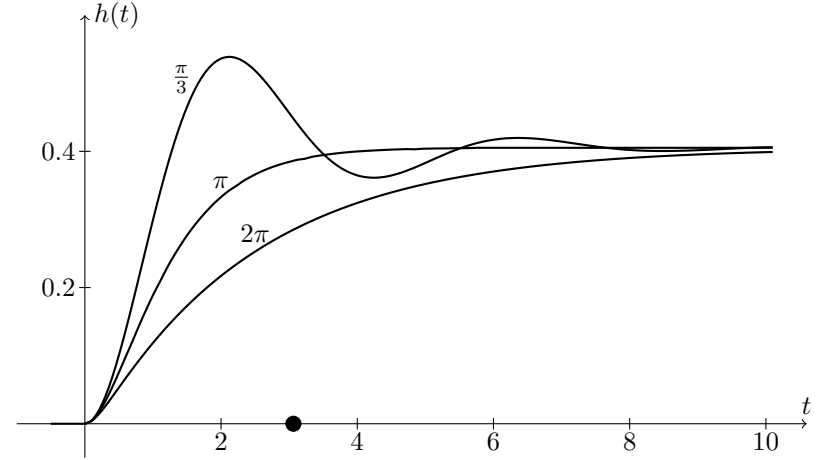
$h(t)$
$\frac{\pi}{3}$
π
2π
0.4
0.2
t
2
4
6
8
10

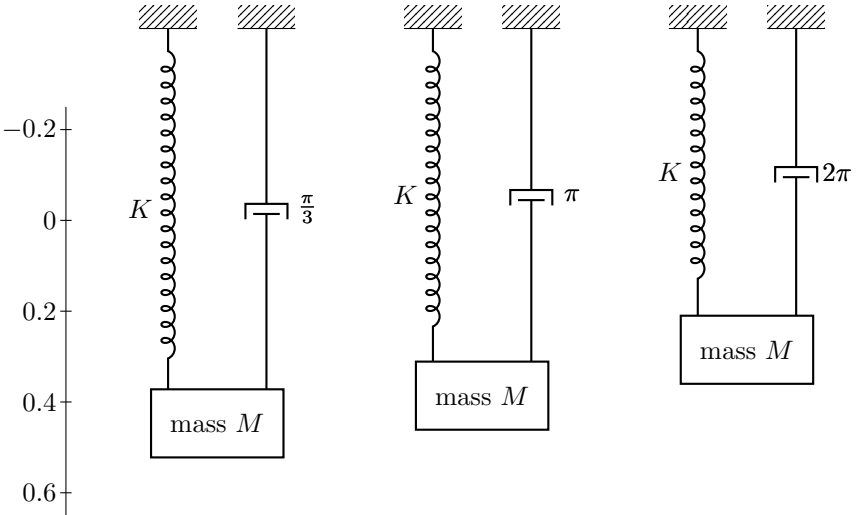
-0.2
0
0.2
0.4
0.6
K
$\frac{\pi}{3}$
mass M
K
π
mass M
K
2π
mass M

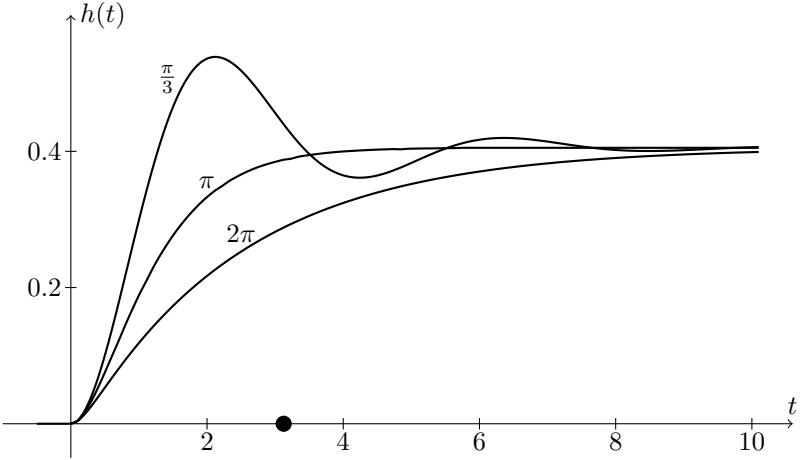
$h(t)$
$\frac{\pi}{3}$
π
2π
0.4
0.2
t
2
4
6
8
10

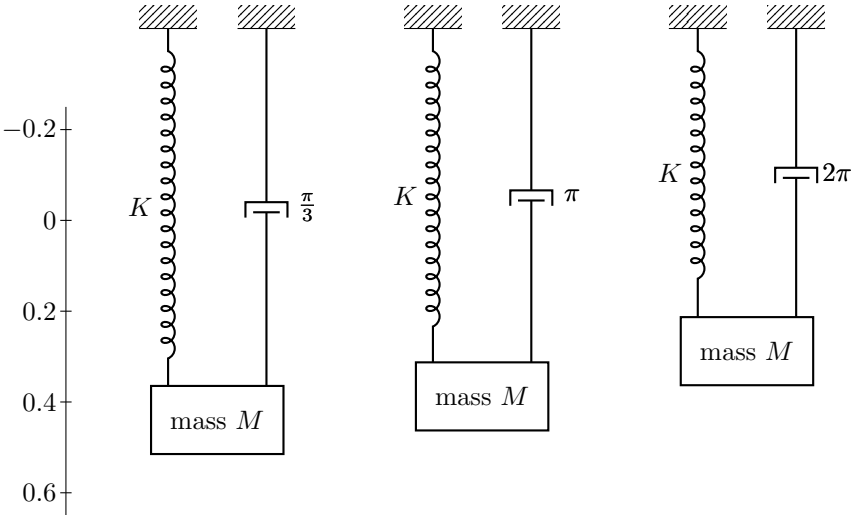
K
$\frac{\pi}{3}$
mass M
K
π
mass M
K
2π
mass M
−0.2
0
0.2
0.4
0.6

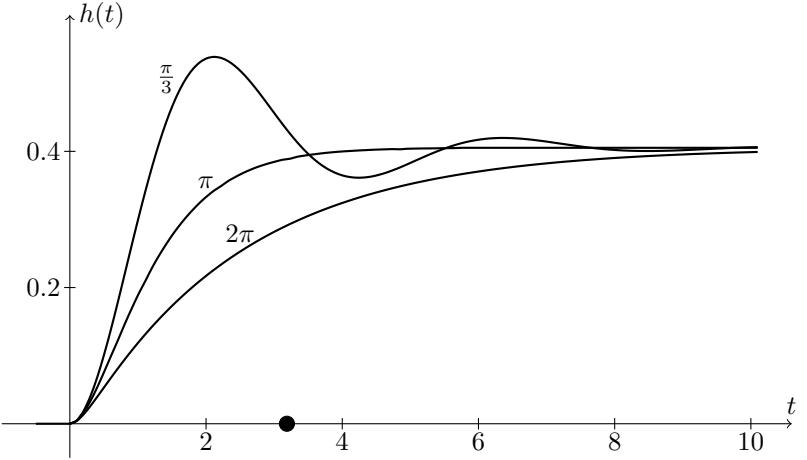
$h(t)$
$\frac{\pi}{3}$
π
2π
0.4
0.2
t
2
4
6
8
10

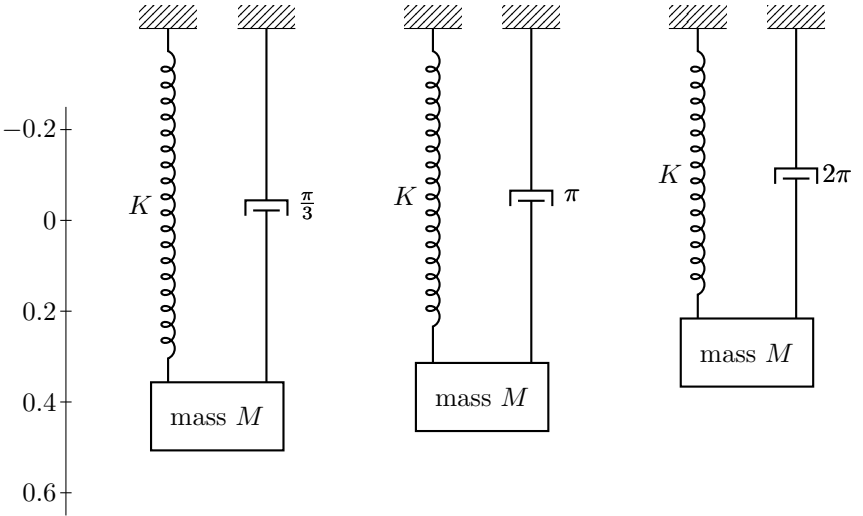
-0.2
0
0.2
0.4
0.6
K
$\frac{\pi}{3}$
mass M
K
π
mass M
K
2π
mass M

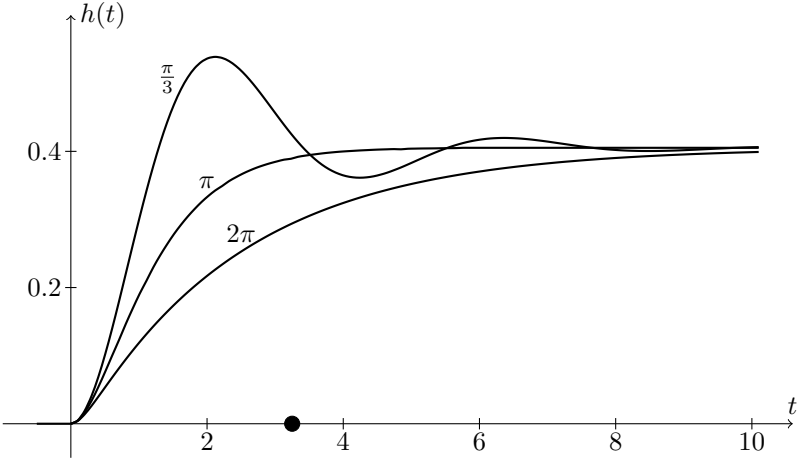
$h(t)$
$\frac{\pi}{3}$
π
2π
0.4
0.2
t
2
4
6
8
10

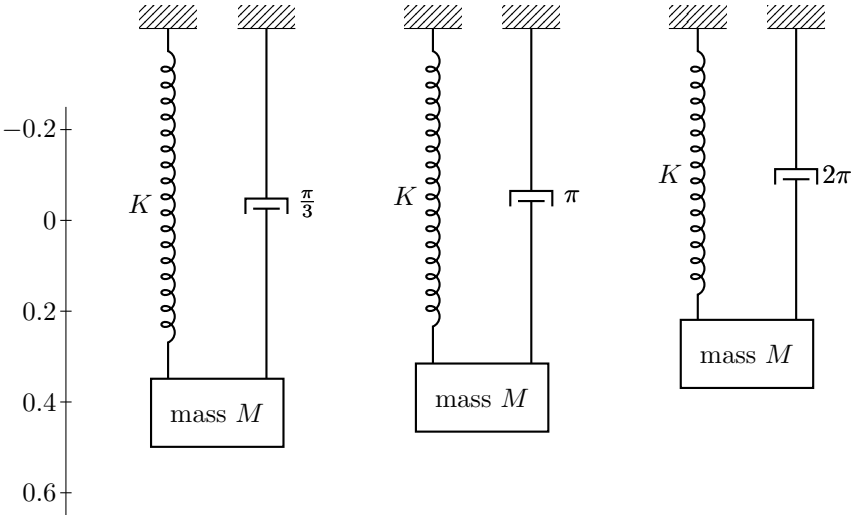
K
$\frac{\pi}{3}$
mass M
K
π
mass M
K
2π
mass M
−0.2
0
0.2
0.4
0.6

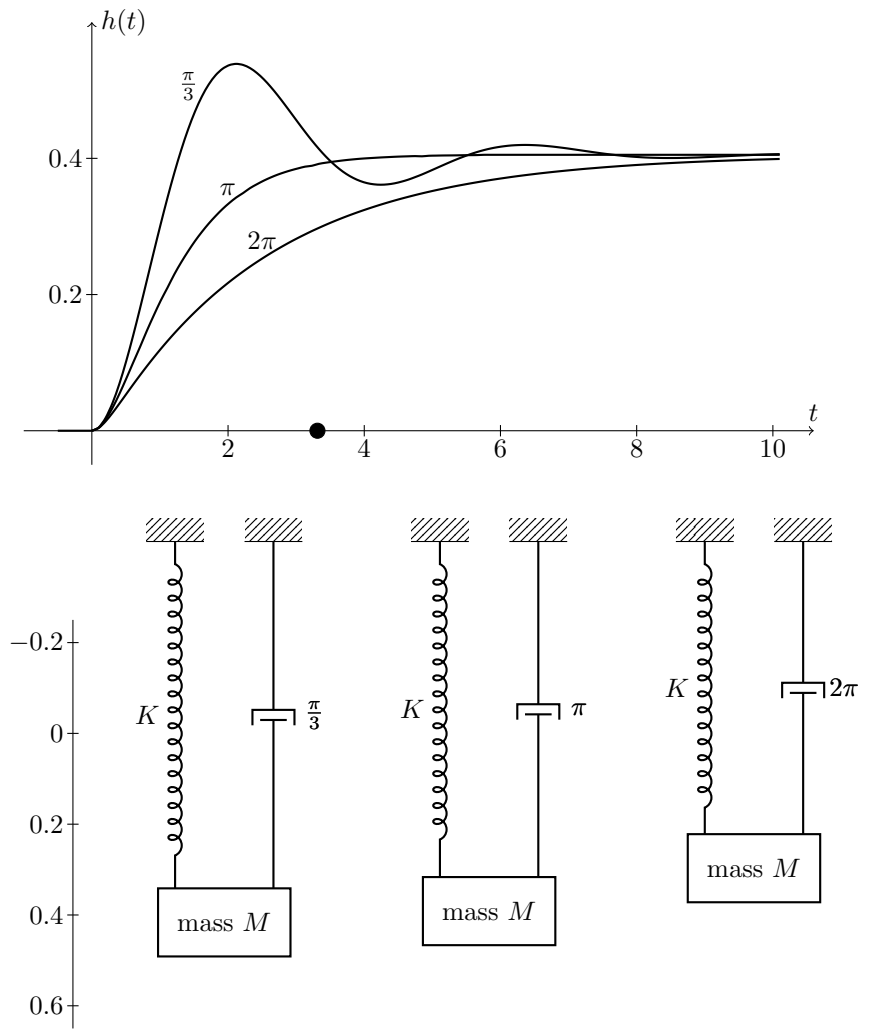
h(t)
π/3
π
2π
0.4
0.2
t
2
4
6
8
10
−0.2
0
0.2
0.4
0.6
K
π/3
mass M
K
π
mass M
K
2π
mass M

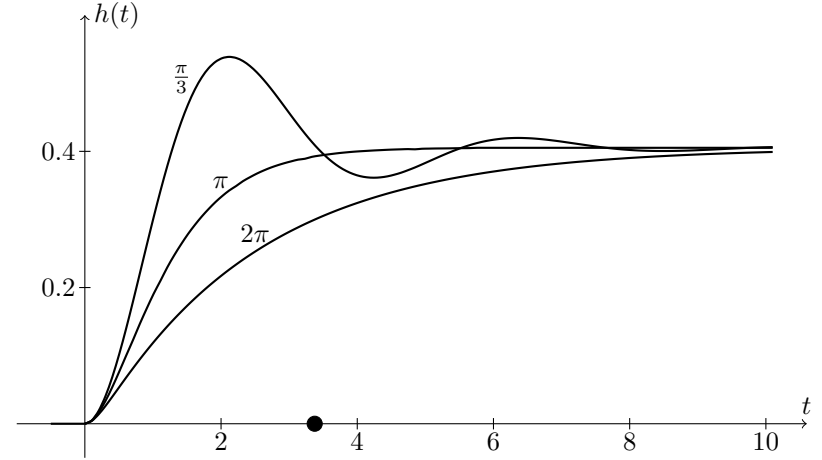
$h(t)$
$\frac{\pi}{3}$
π
2π
0.4
0.2
t
2
4
6
8
10

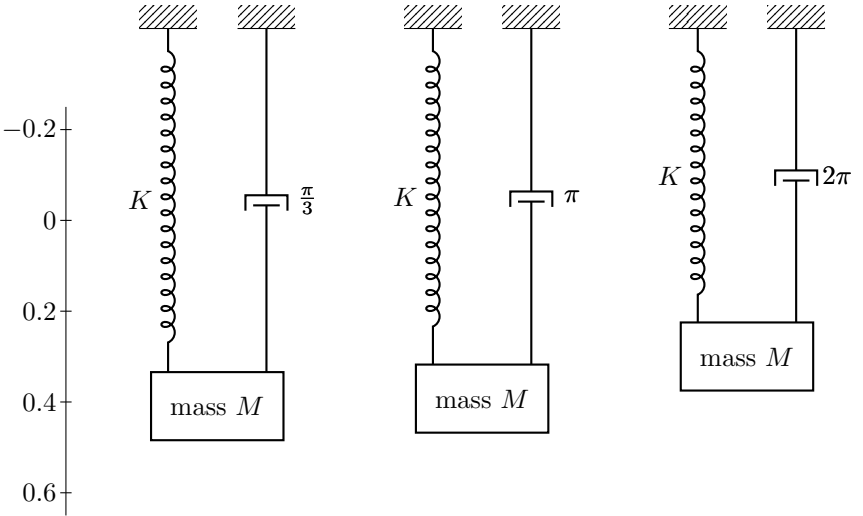
K
$\frac{\pi}{3}$
mass M
K
π
mass M
K
2π
mass M
−0.2
0
0.2
0.4
0.6

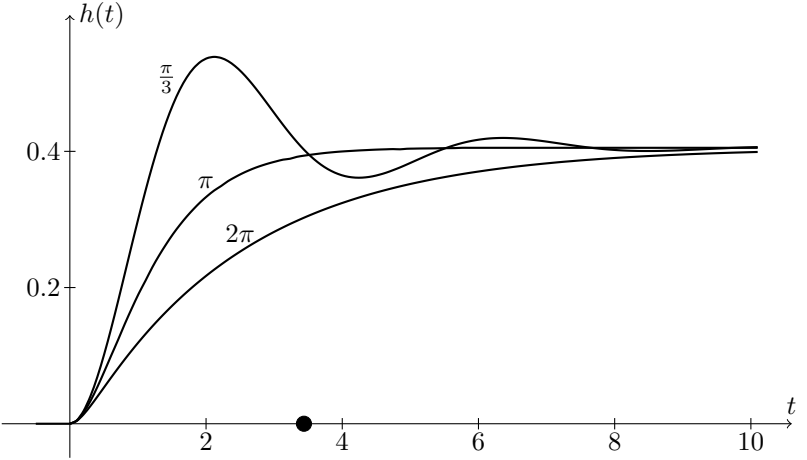
$h(t)$
$\frac{\pi}{3}$
π
2π
0.4
0.2
t
2
4
6
8
10

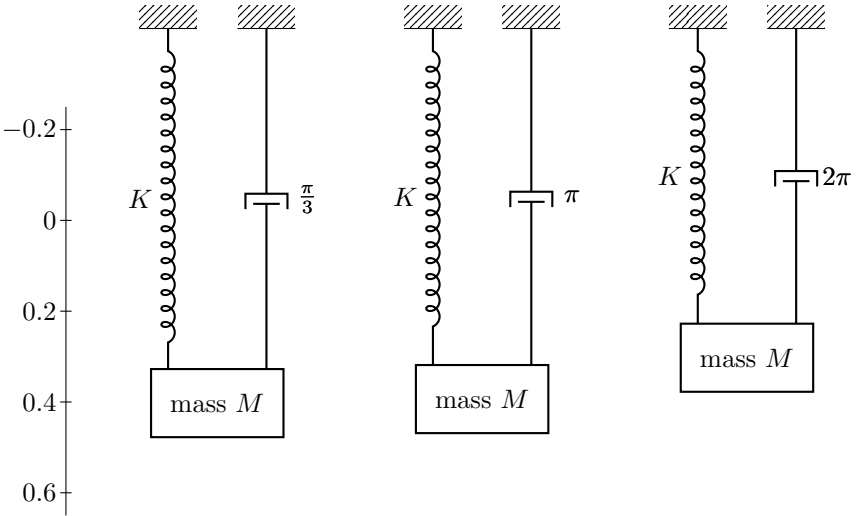
−0.2
0
0.2
0.4
0.6
K
$\frac{\pi}{3}$
mass M
K
π
mass M
K
2π
mass M

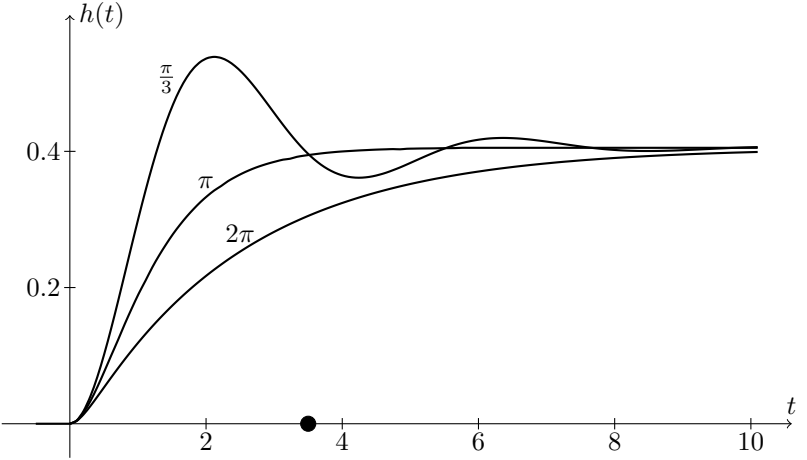
$h(t)$
$\frac{\pi}{3}$
π
2π
0.4
0.2
t
2
4
6
8
10

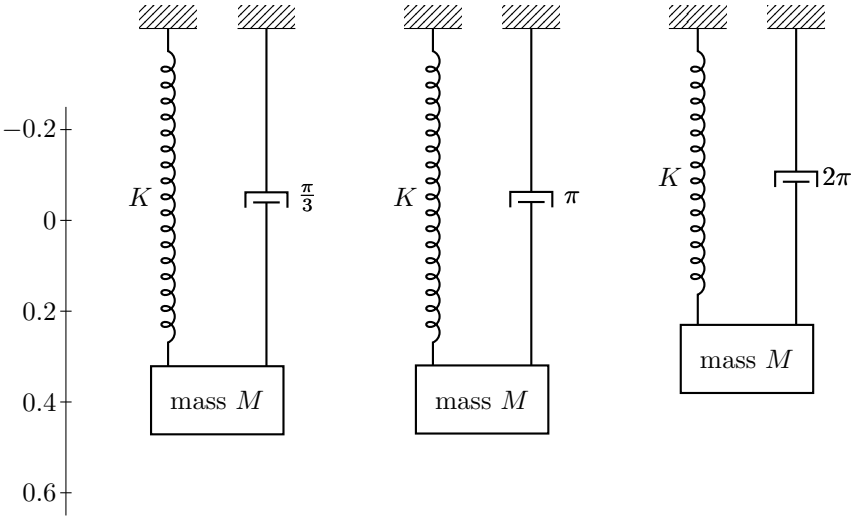
K
$\frac{\pi}{3}$
mass M
K
π
mass M
K
2π
mass M
−0.2
0
0.2
0.4
0.6

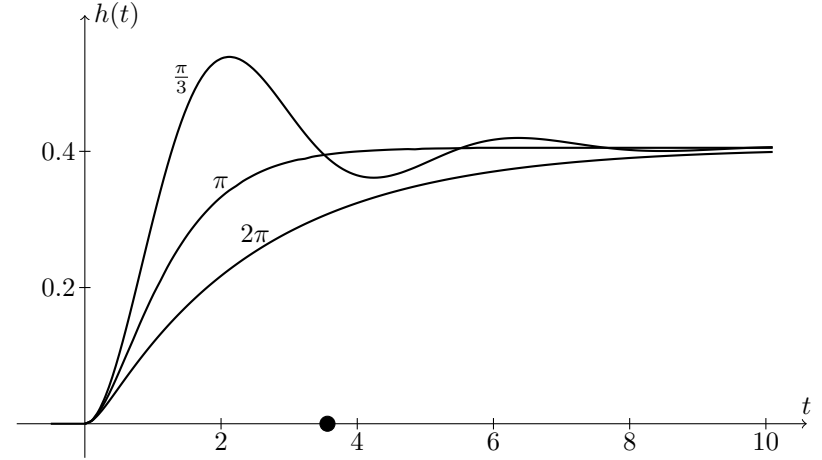
$h(t)$
$\frac{\pi}{3}$
π
2π
0.4
0.2
t
2
4
6
8
10

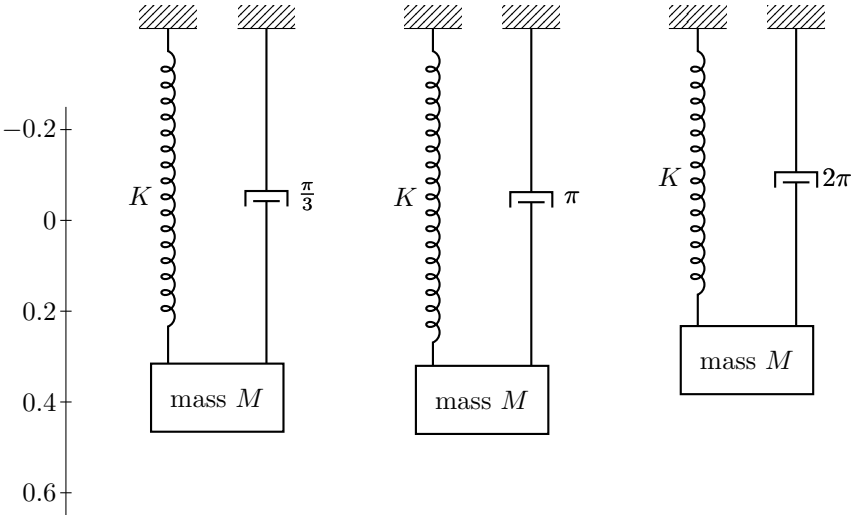
-0.2
0
0.2
0.4
0.6
K
$\frac{\pi}{3}$
mass M
K
π
mass M
K
2π
mass M

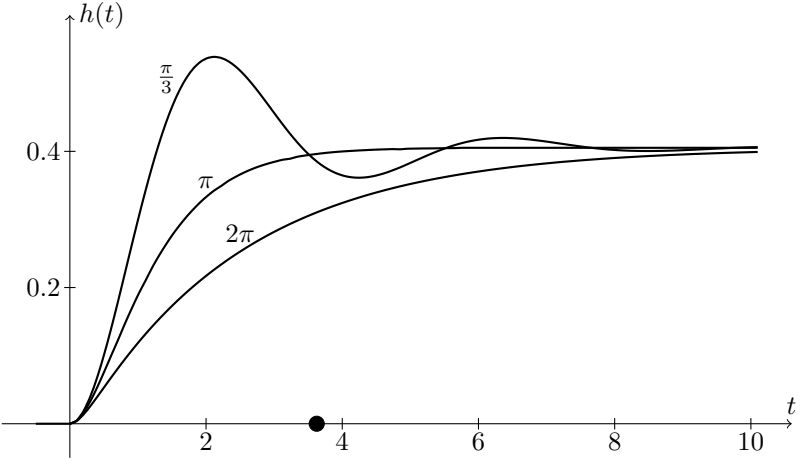
$h(t)$
$\frac{\pi}{3}$
π
2π
0.4
0.2
t
2
4
6
8
10

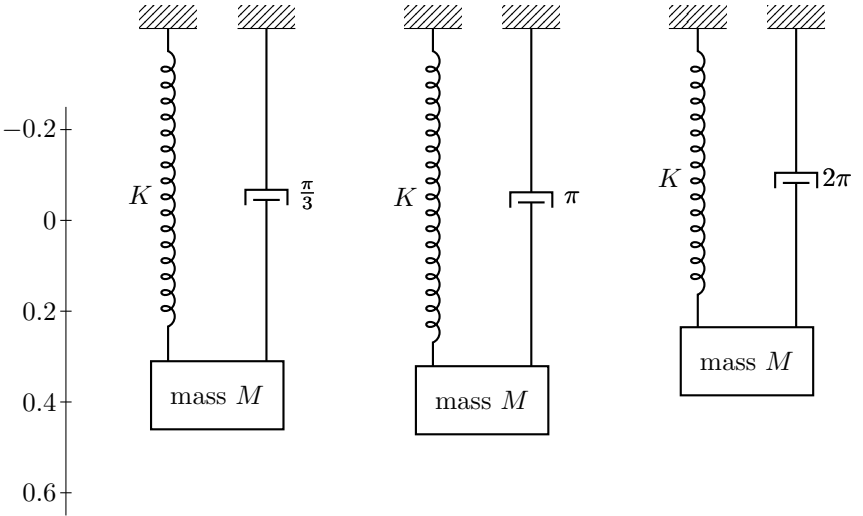
K
$\frac{\pi}{3}$
mass M
K
π
mass M
K
2π
mass M
−0.2
0
0.2
0.4
0.6

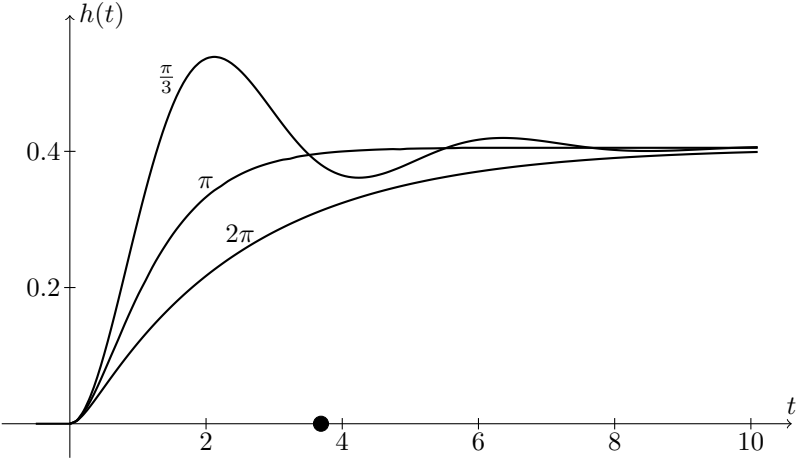
$h(t)$
$\frac{\pi}{3}$
π
2π
0.4
0.2
t
2
4
6
8
10

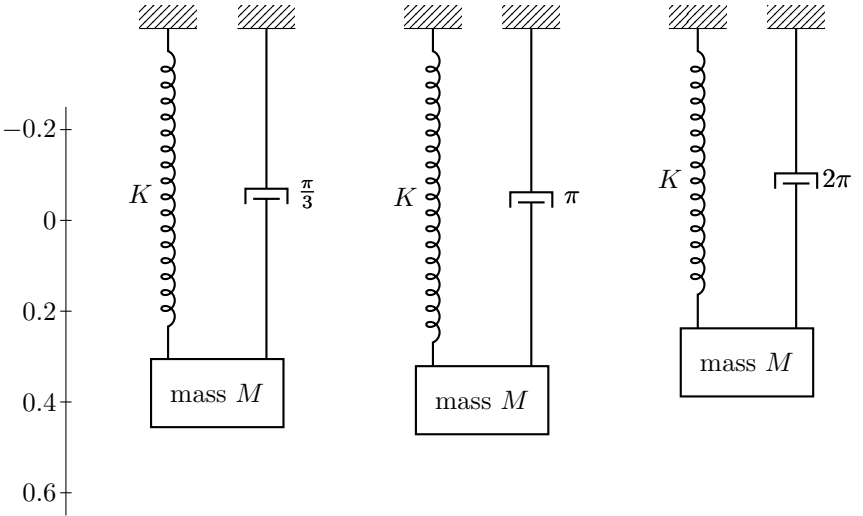
K
$\frac{\pi}{3}$
mass M
K
π
mass M
K
2π
mass M
−0.2
0
0.2
0.4
0.6

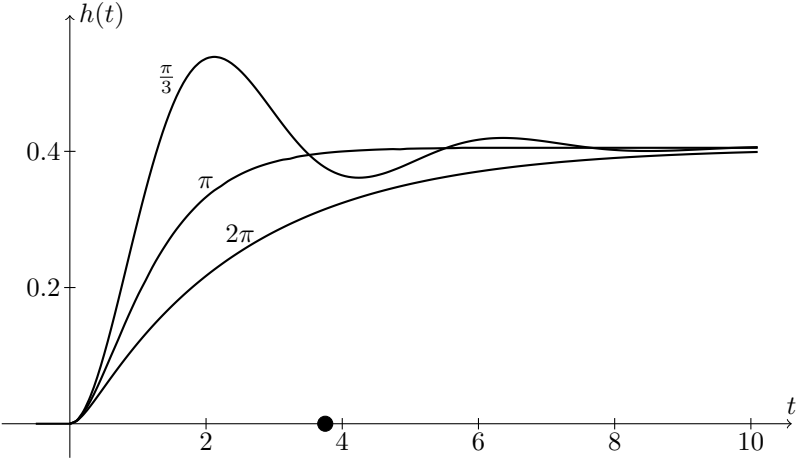
$h(t)$
$\frac{\pi}{3}$
π
2π
0.4
0.2
t
2
4
6
8
10

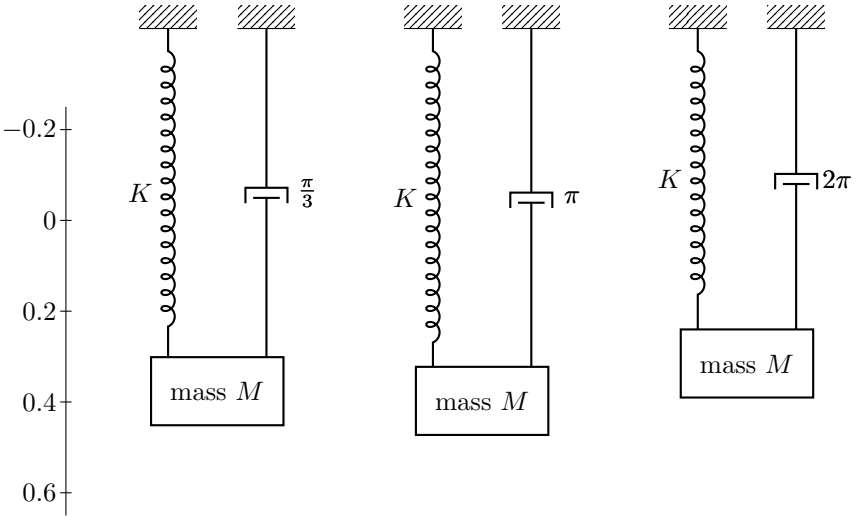
-0.2
0
0.2
0.4
0.6
K
$\frac{\pi}{3}$
mass M
K
π
mass M
K
2π
mass M

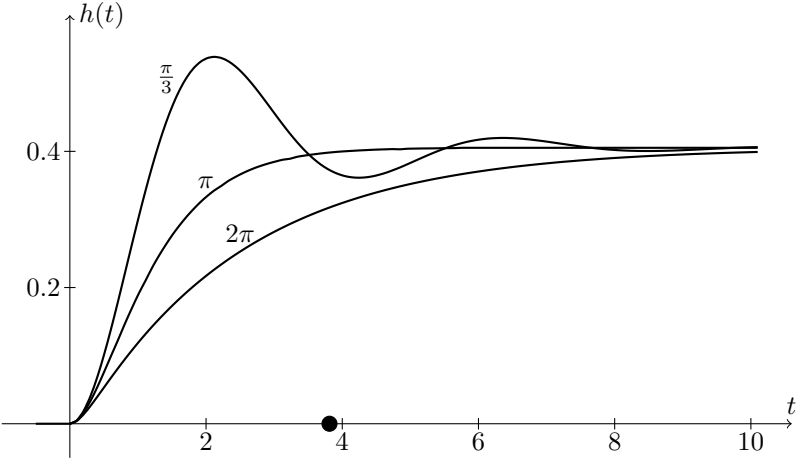
$h(t)$
$\frac{\pi}{3}$
π
2π
0.4
0.2
t
2
4
6
8
10

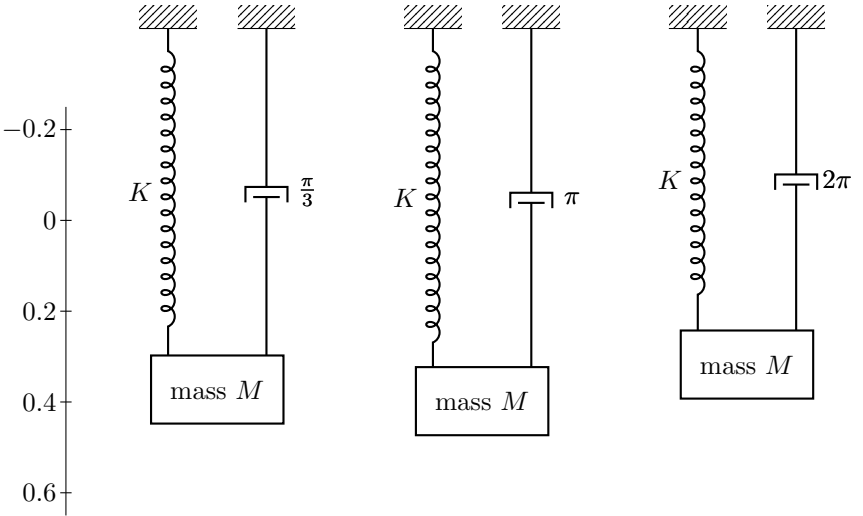
K
$\frac{\pi}{3}$
mass M
K
π
mass M
K
2π
mass M
−0.2
0
0.2
0.4
0.6

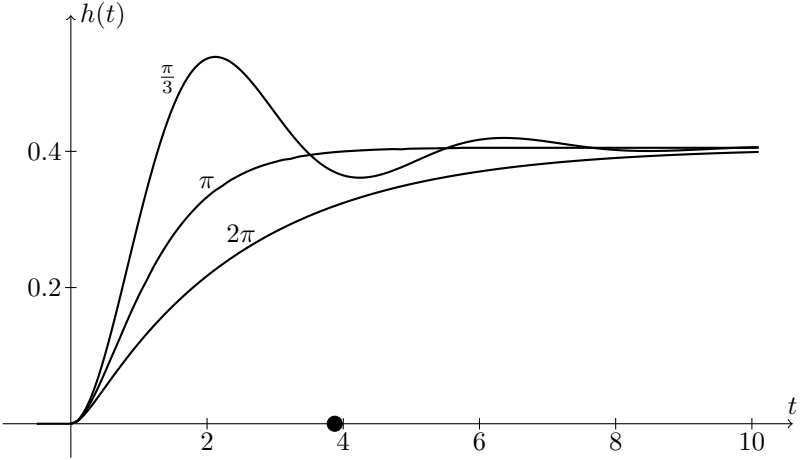
$h(t)$
$\frac{\pi}{3}$
π
2π
0.4
0.2
t
2
4
6
8
10

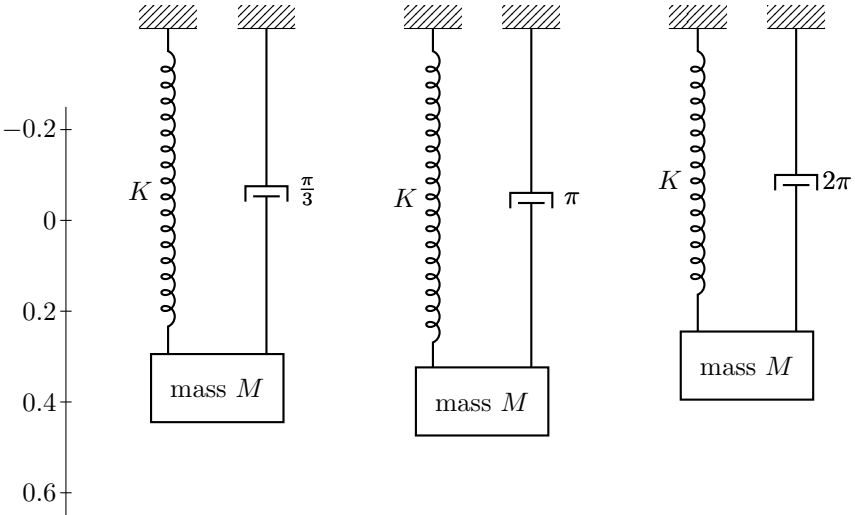
-0.2
0
0.2
0.4
0.6
K
$\frac{\pi}{3}$
mass M
K
π
mass M
K
2π
mass M

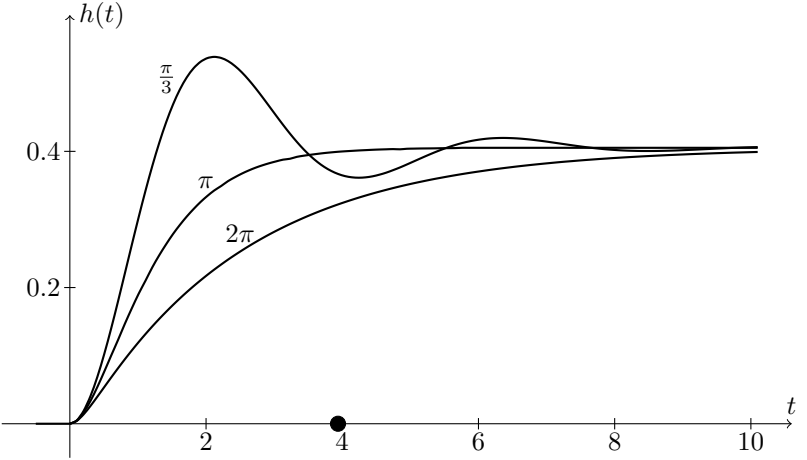
$h(t)$
$\frac{\pi}{3}$
π
2π
0.4
0.2
t
2
4
6
8
10

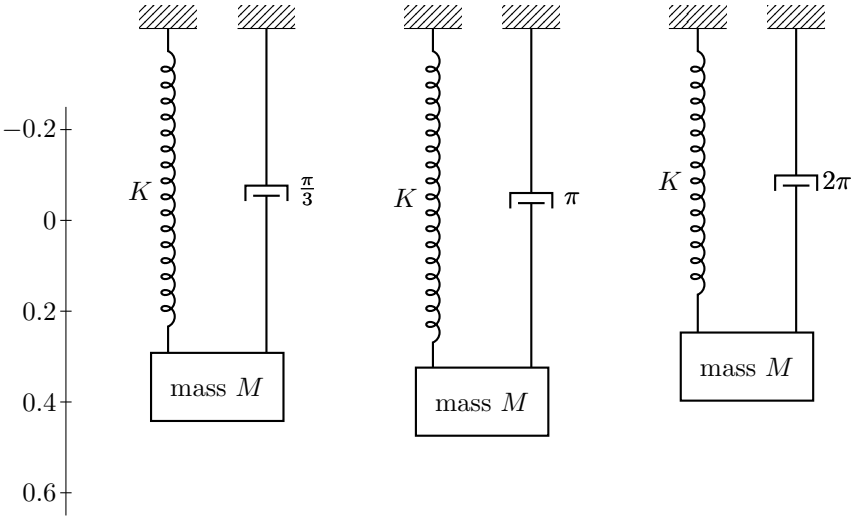
K
$\frac{\pi}{3}$
mass M
K
π
mass M
K
2π
mass M
−0.2
0
0.2
0.4
0.6

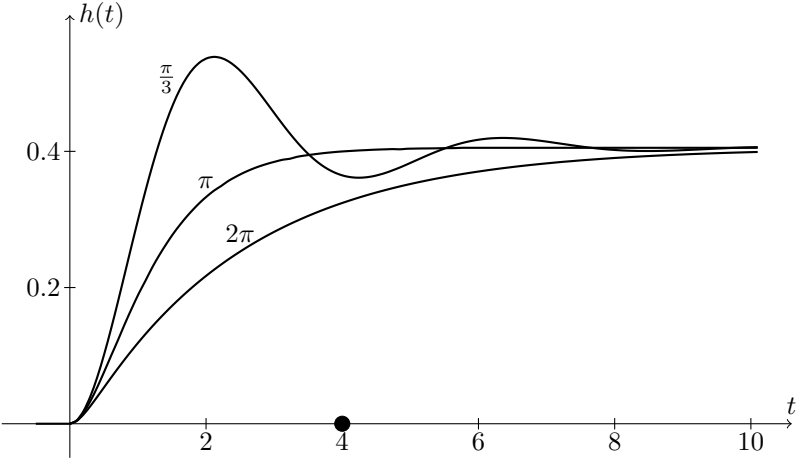
$h(t)$
$\frac{\pi}{3}$
π
2π
0.4
0.2
t
2
4
6
8
10

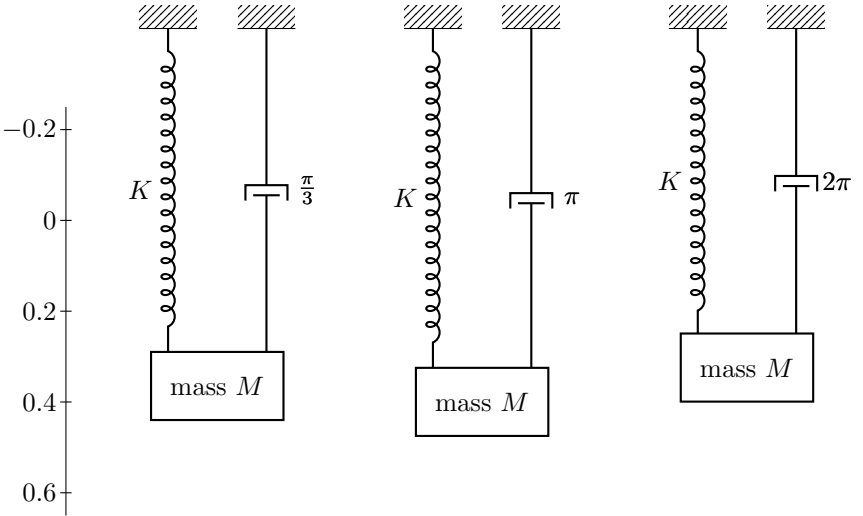
K
$\frac{\pi}{3}$
mass M
K
π
mass M
K
2π
mass M
−0.2
0
0.2
0.4
0.6

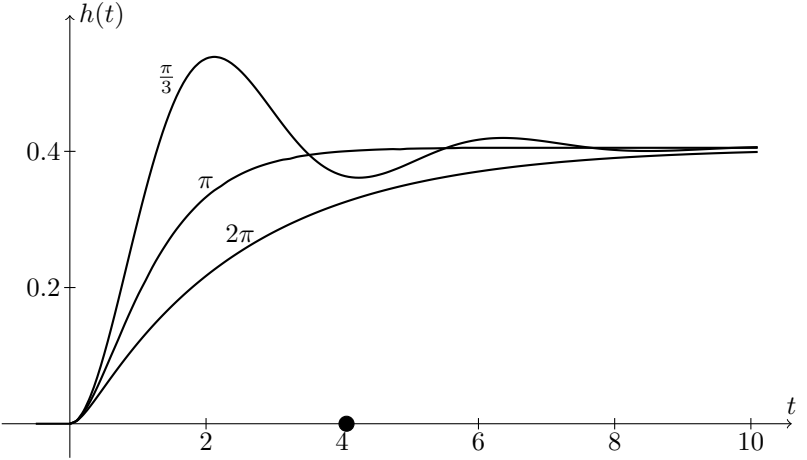
$h(t)$
$\frac{\pi}{3}$
π
2π
0.4
0.2
t
2
4
6
8
10

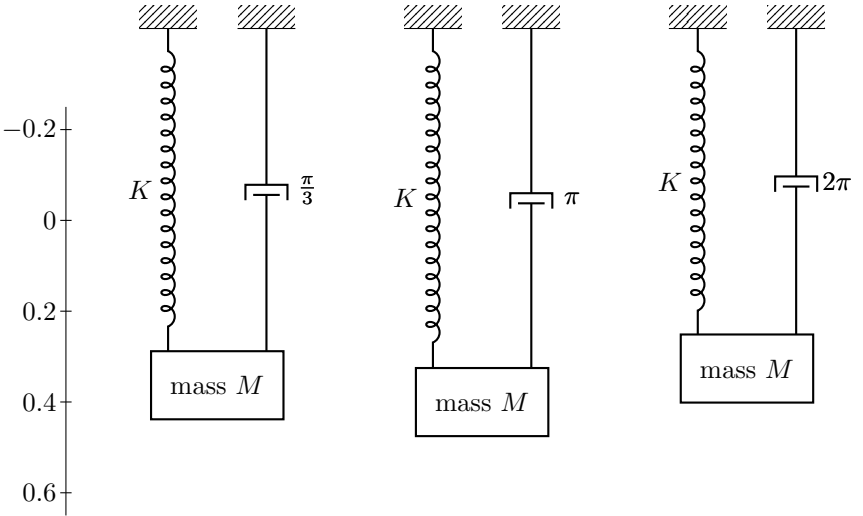
K
$\frac{\pi}{3}$
mass M
K
π
mass M
K
2π
mass M
−0.2
0
0.2
0.4
0.6

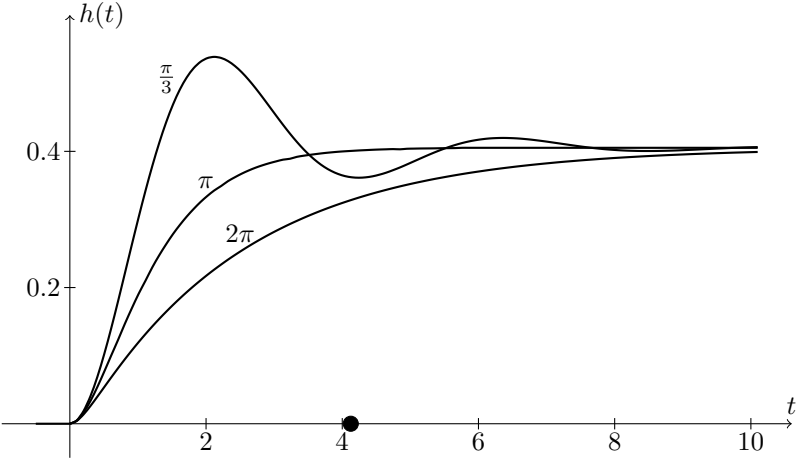
$h(t)$
$\frac{\pi}{3}$
π
2π
0.4
0.2
t
2
4
6
8
10

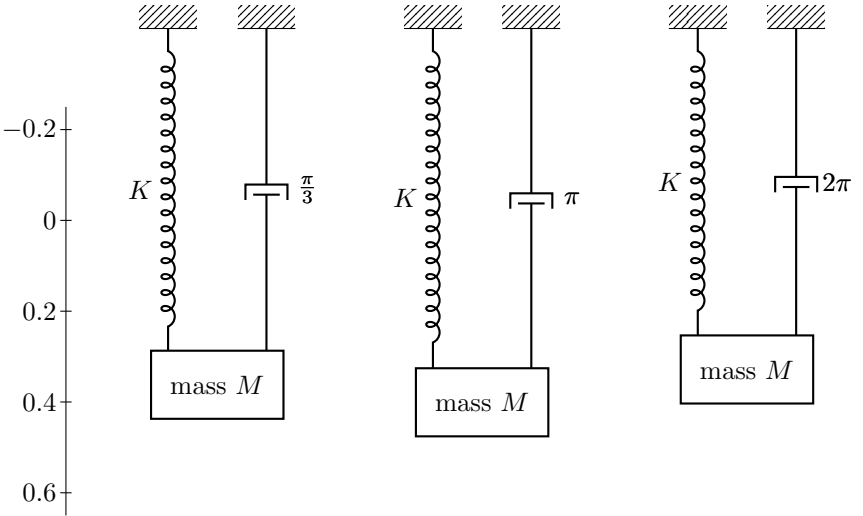
K
$\frac{\pi}{3}$
mass M
K
π
mass M
K
2π
mass M
−0.2
0
0.2
0.4
0.6

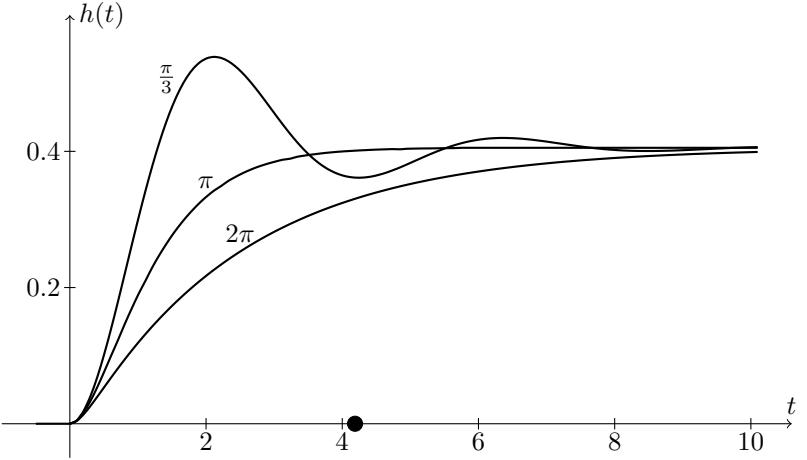
$h(t)$
$\frac{\pi}{3}$
π
2π
0.4
0.2
t
2
4
6
8
10

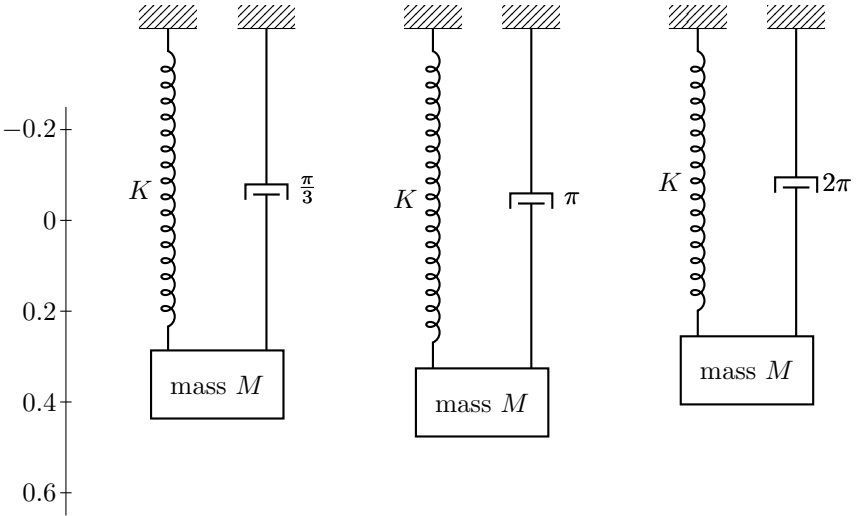
K
$\frac{\pi}{3}$
mass M
K
π
mass M
K
2π
mass M
−0.2
0
0.2
0.4
0.6

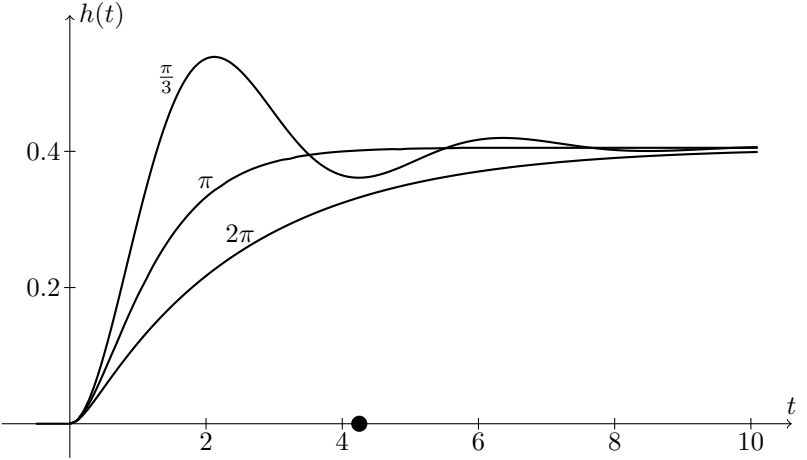
$h(t)$
$\frac{\pi}{3}$
π
2π
0.4
0.2
t
2
4
6
8
10

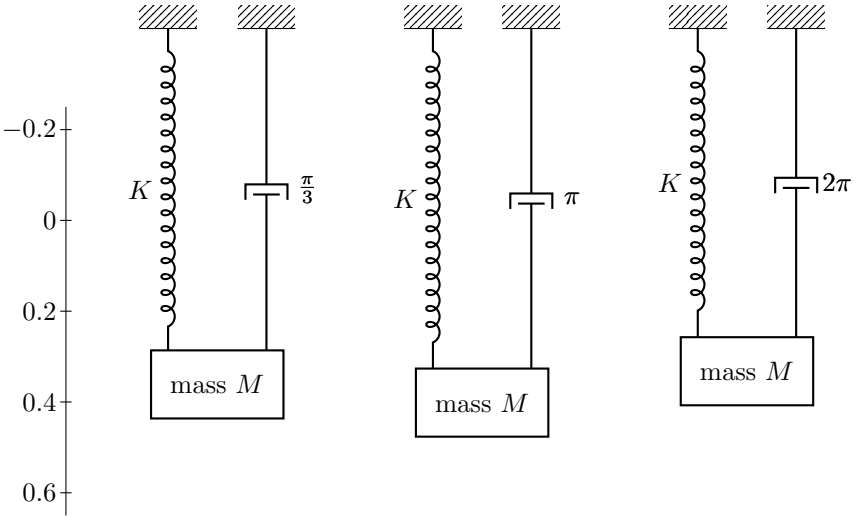
K
$\frac{\pi}{3}$
mass M
K
π
mass M
K
2π
mass M
−0.2
0
0.2
0.4
0.6

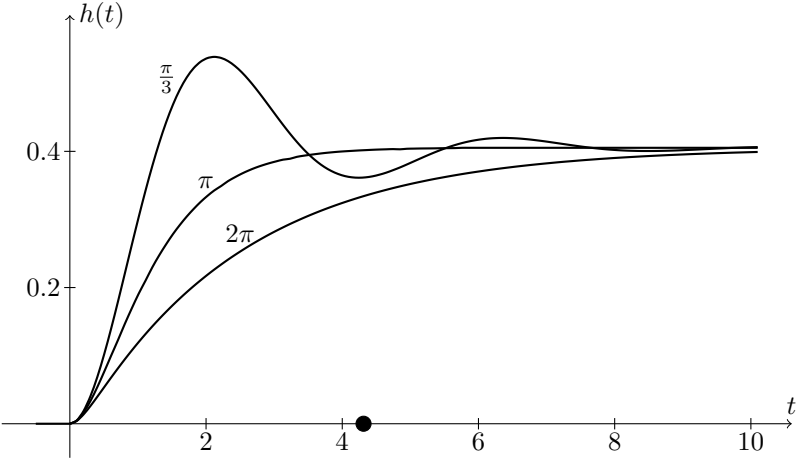
$h(t)$
$\frac{\pi}{3}$
π
2π
0.4
0.2
t
2
4
6
8
10

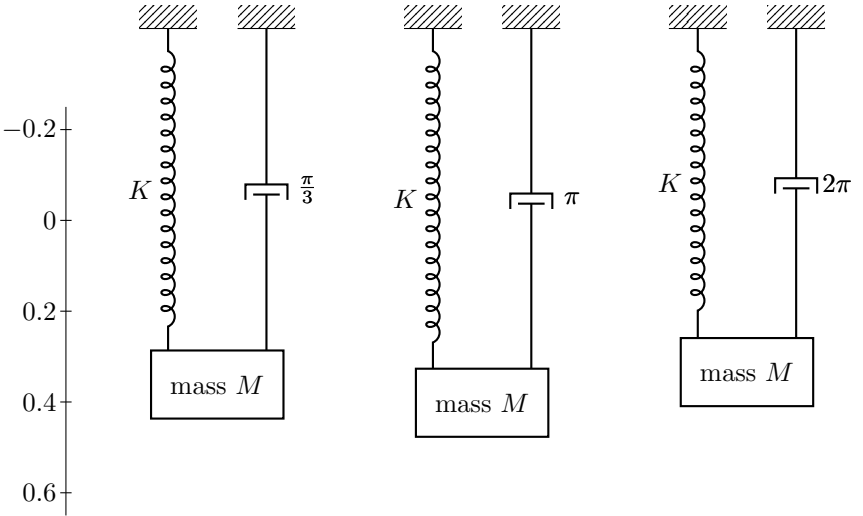
K
$\frac{\pi}{3}$
mass M
K
π
mass M
K
2π
mass M
−0.2
0
0.2
0.4
0.6

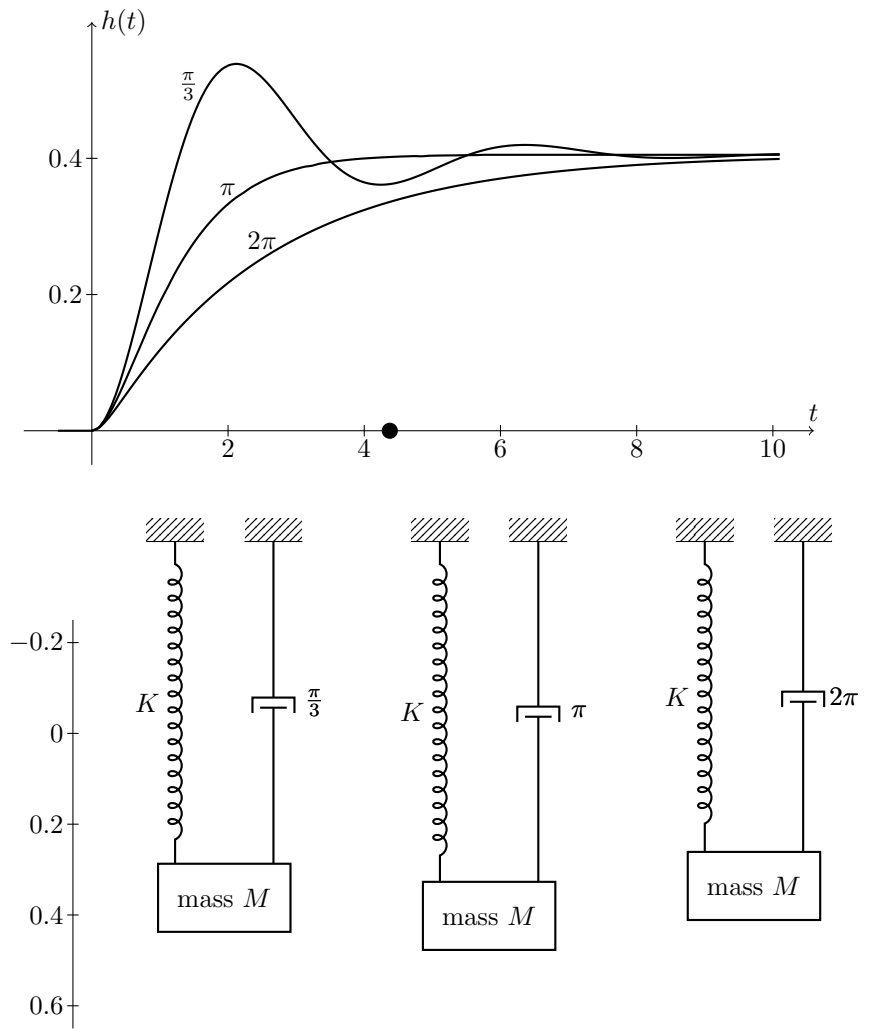
h(t)
t
0.4
0.2
2
4
6
8
10
π/3
π
2π
−0.2
0
0.2
0.4
0.6
K
π/3
mass M
K
π
mass M
K
2π
mass M

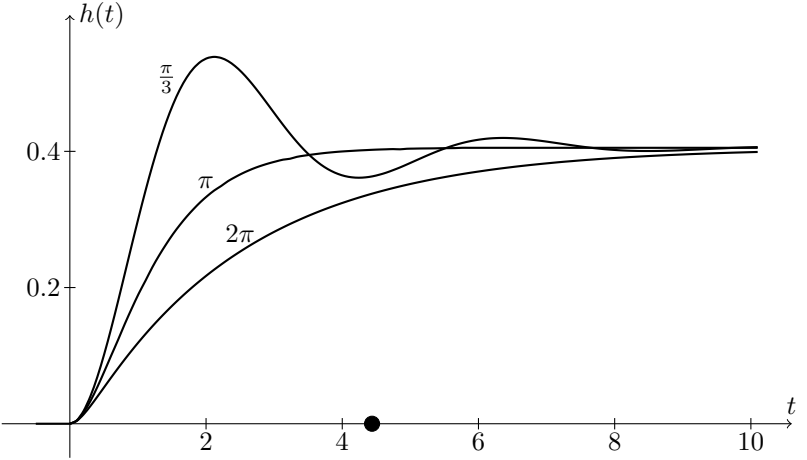
$h(t)$
$\frac{\pi}{3}$
π
2π
0.4
0.2
t
2
4
6
8
10

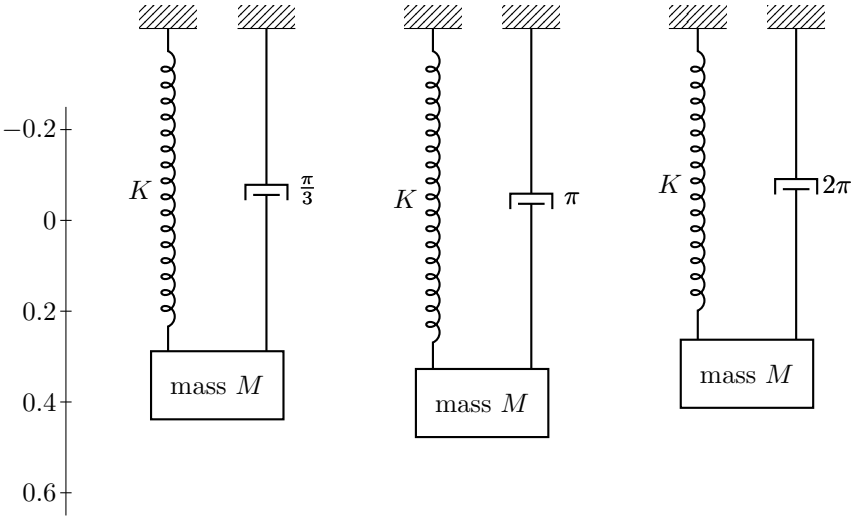
K
$\frac{\pi}{3}$
mass M
K
π
mass M
K
2π
mass M
−0.2
0
0.2
0.4
0.6

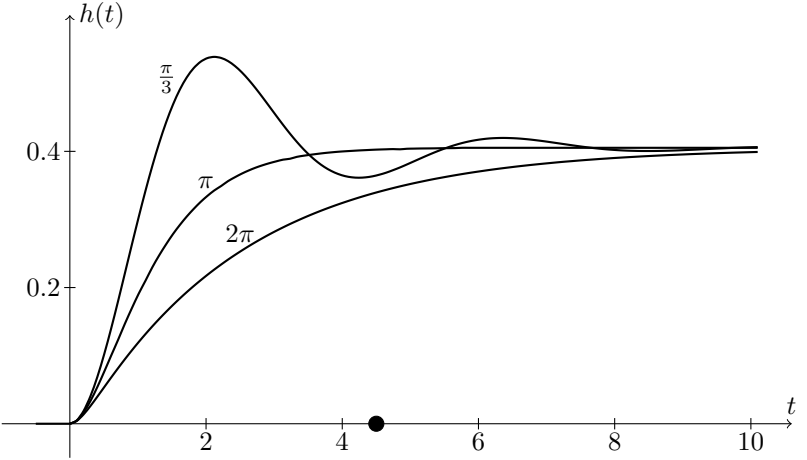
$h(t)$
$\frac{\pi}{3}$
π
2π
0.4
0.2
t
2
4
6
8
10

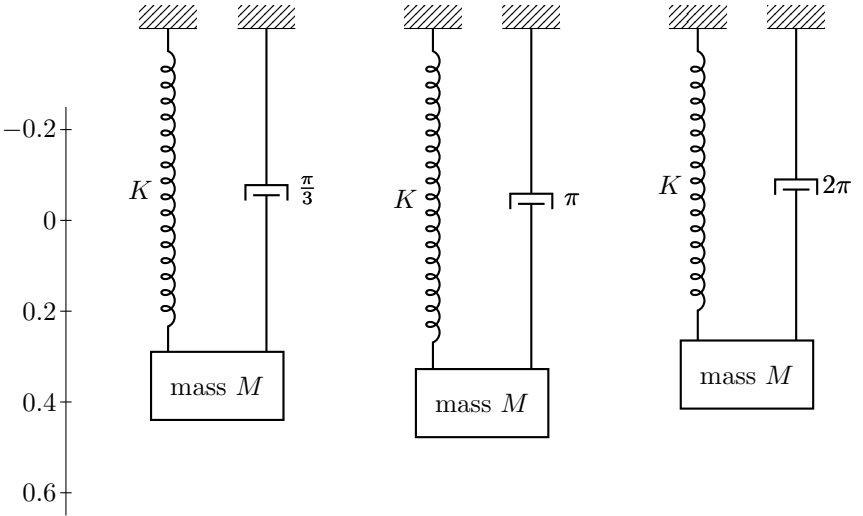
K
$\frac{\pi}{3}$
mass M
K
π
mass M
K
2π
mass M
−0.2
0
0.2
0.4
0.6

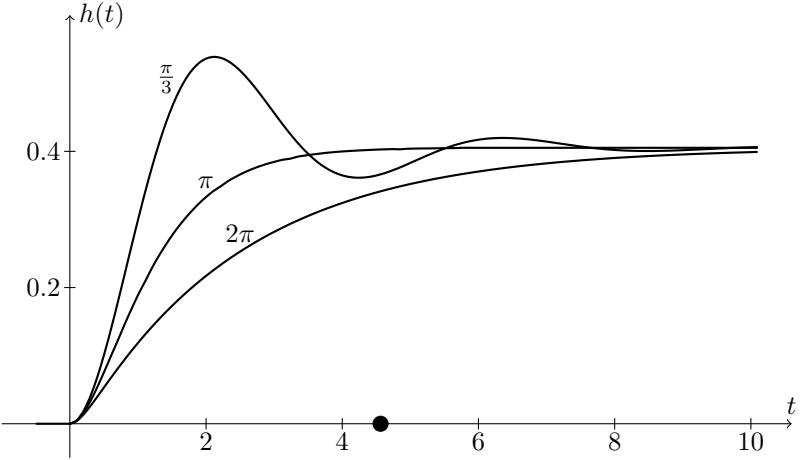
$h(t)$
$\frac{\pi}{3}$
π
2π
0.4
0.2
t
2
4
6
8
10

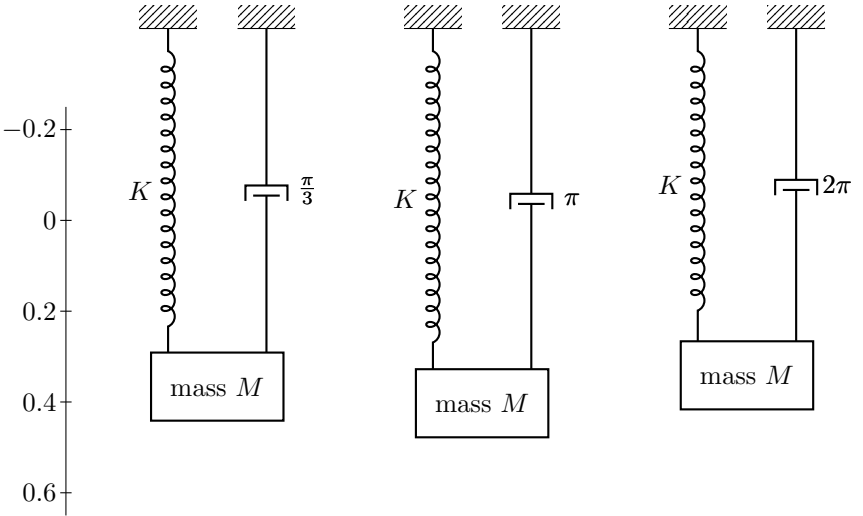
K
$\frac{\pi}{3}$
mass M
K
π
mass M
K
2π
mass M
−0.2
0
0.2
0.4
0.6

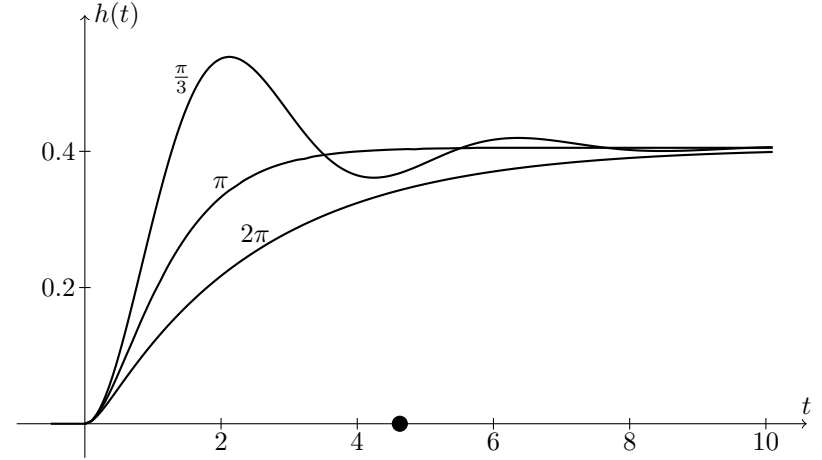
$h(t)$
$\frac{\pi}{3}$
π
2π
0.4
0.2
t
2
4
6
8
10

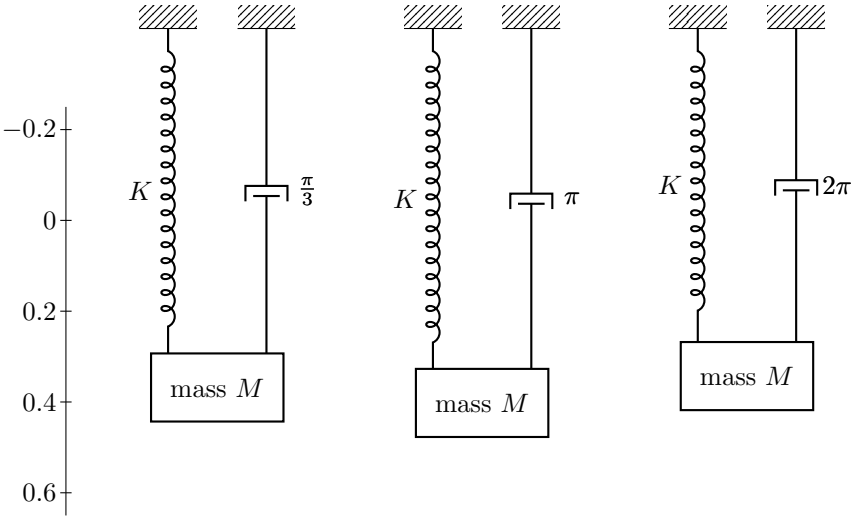
K
$\frac{\pi}{3}$
mass M
K
π
mass M
K
2π
mass M
−0.2
0
0.2
0.4
0.6

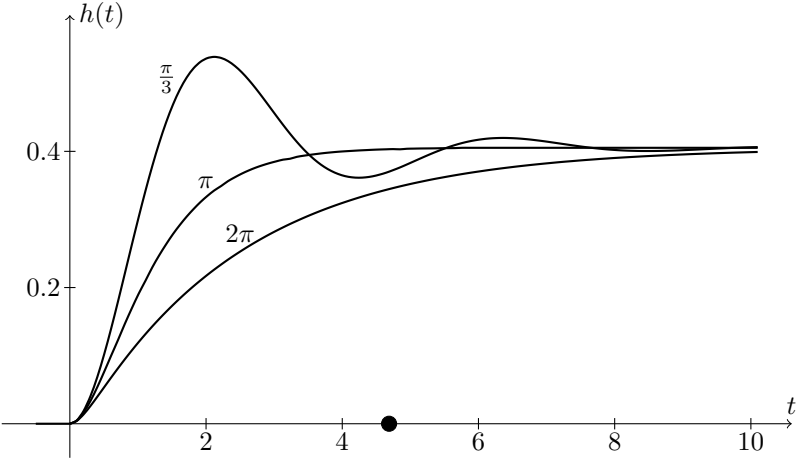
$h(t)$
$\frac{\pi}{3}$
π
2π
0.4
0.2
t
2
4
6
8
10

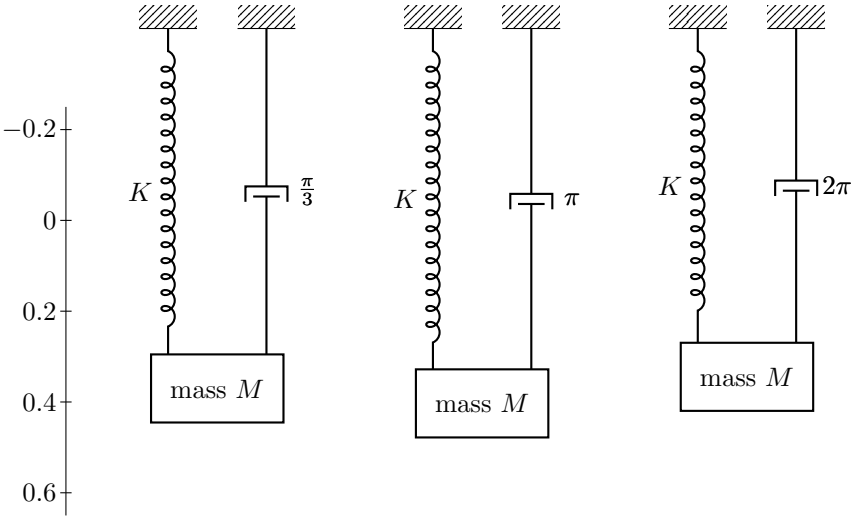
K
$\frac{\pi}{3}$
mass M
K
π
mass M
K
2π
mass M
−0.2
0
0.2
0.4
0.6

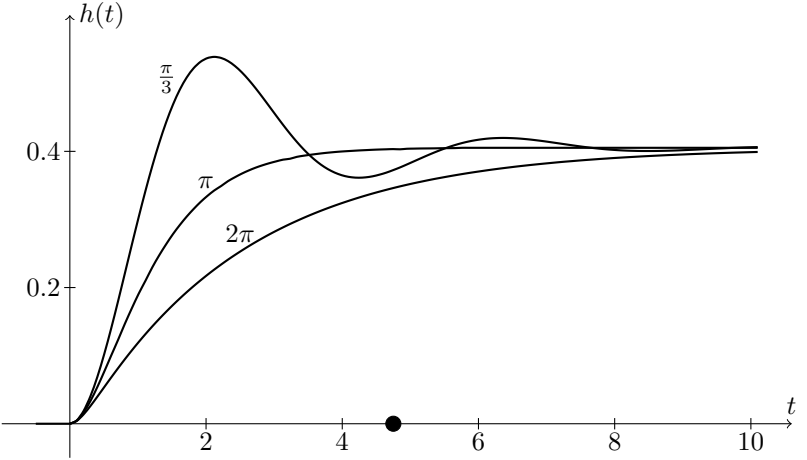
$h(t)$
$\frac{\pi}{3}$
π
2π
0.4
0.2
t
2
4
6
8
10

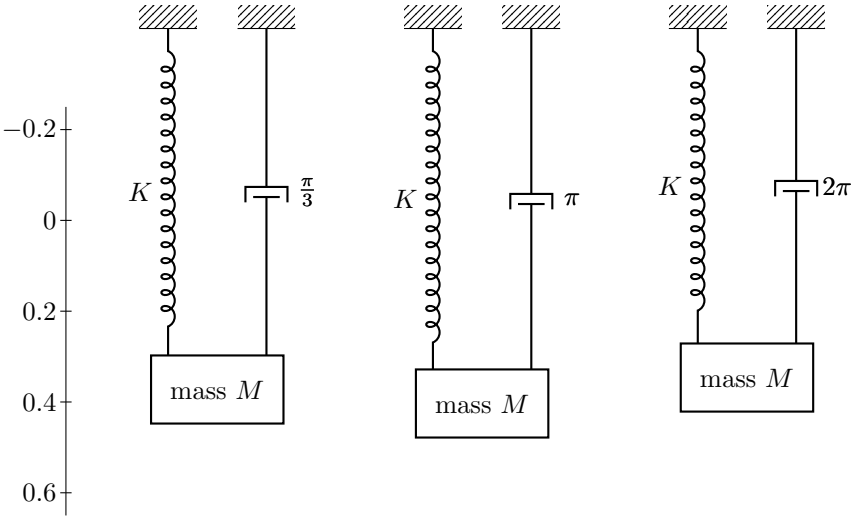
−0.2
0
0.2
0.4
0.6
K
$\frac{\pi}{3}$
mass M
K
π
mass M
K
2π
mass M

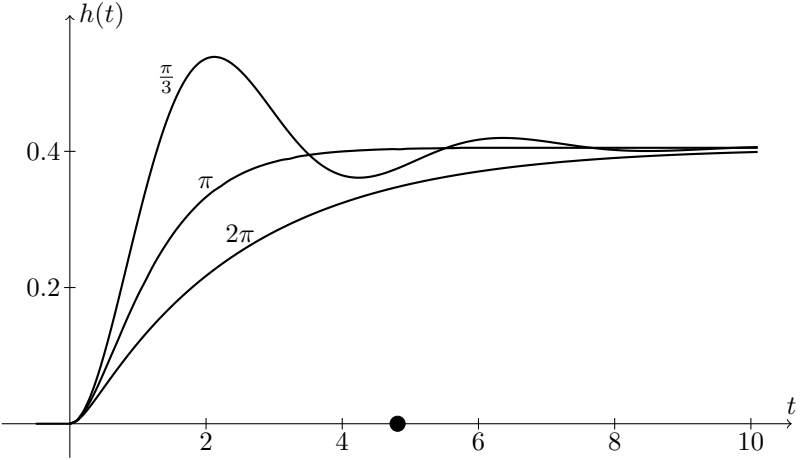
$h(t)$
$\frac{\pi}{3}$
π
2π
0.4
0.2
t
2
4
6
8
10

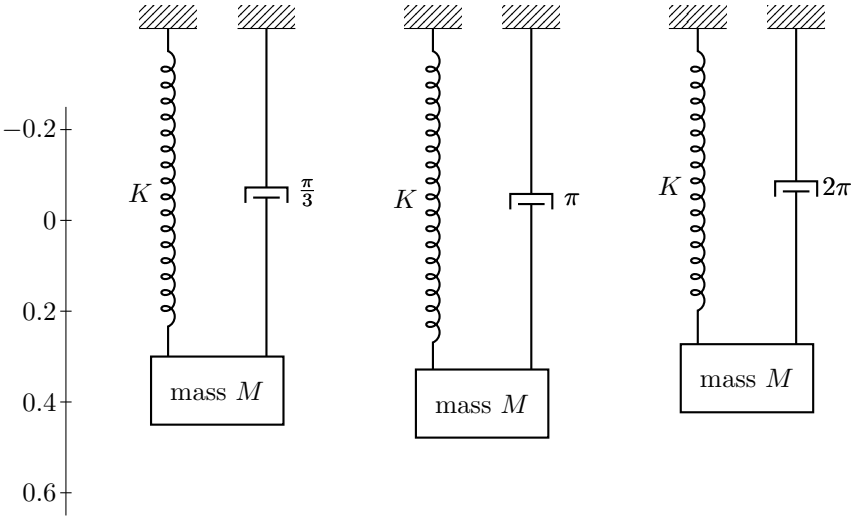
K
$\frac{\pi}{3}$
mass M
K
π
mass M
K
2π
mass M
−0.2
0
0.2
0.4
0.6

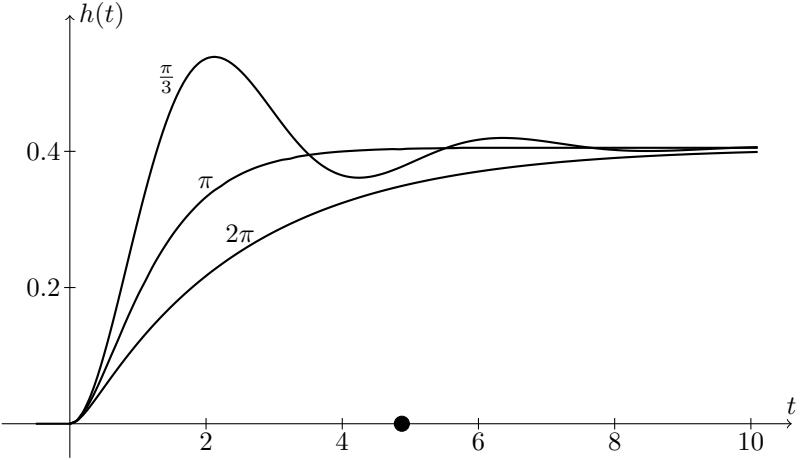
$h(t)$
$\frac{\pi}{3}$
π
2π
0.4
0.2
t
2
4
6
8
10

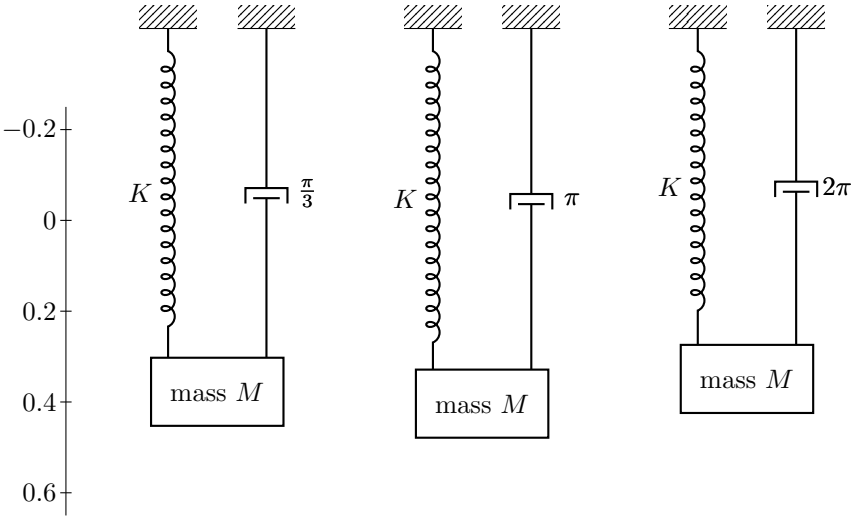
K
$\frac{\pi}{3}$
mass M
K
π
mass M
K
2π
mass M
−0.2
0
0.2
0.4
0.6

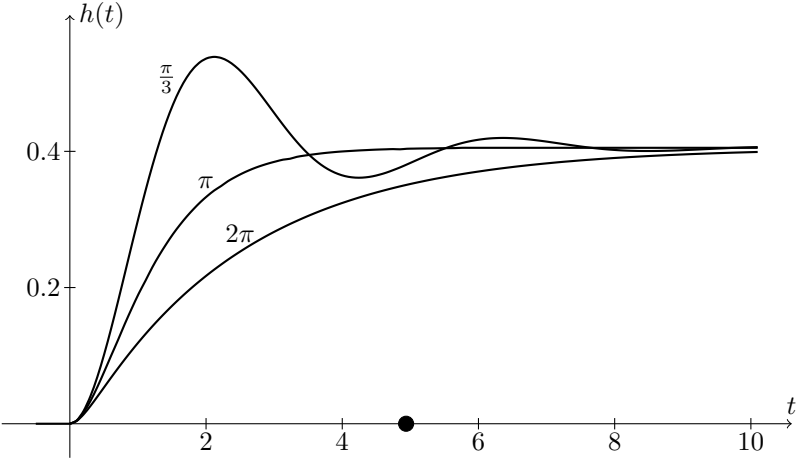
$h(t)$
$\frac{\pi}{3}$
π
2π
0.4
0.2
t
2
4
6
8
10

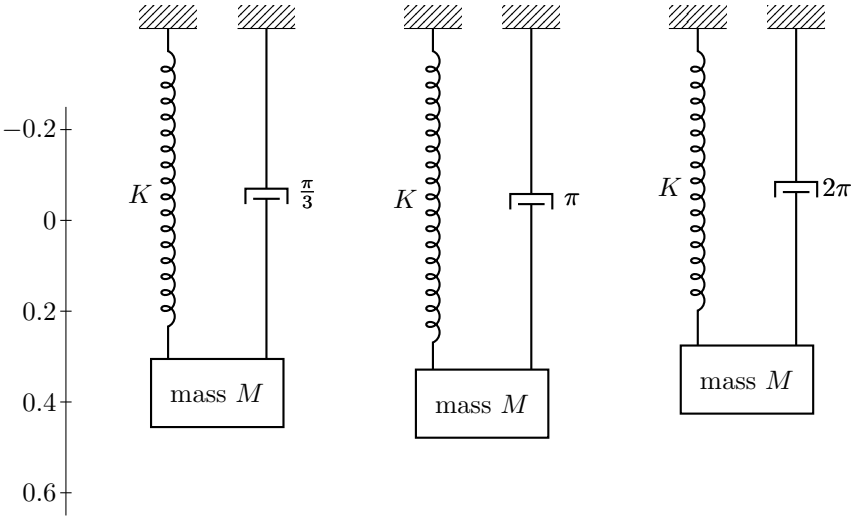
K
$\frac{\pi}{3}$
mass M
K
π
mass M
K
2π
mass M
−0.2
0
0.2
0.4
0.6

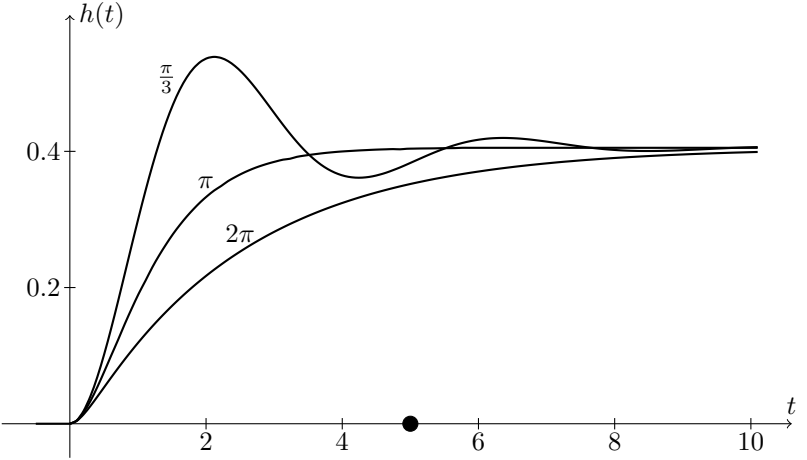
$h(t)$
$\frac{\pi}{3}$
π
2π
0.4
0.2
t
2
4
6
8
10

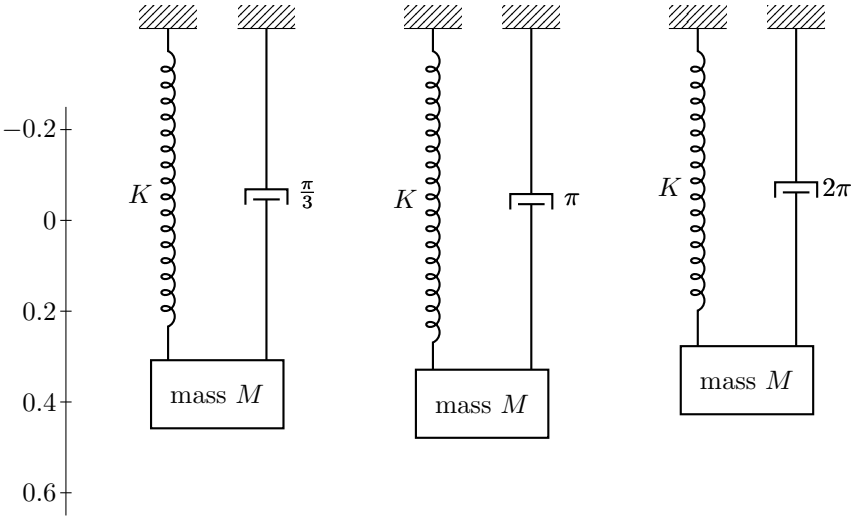
K
$\frac{\pi}{3}$
mass M
K
π
mass M
K
2π
mass M
−0.2
0
0.2
0.4
0.6

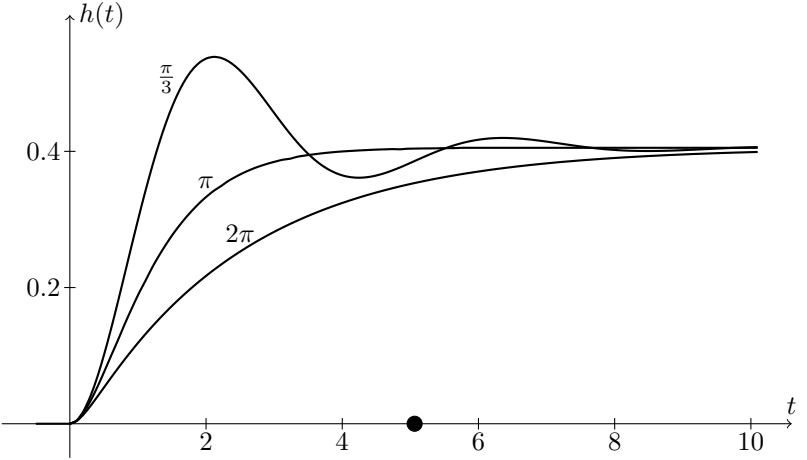
$h(t)$
$\frac{\pi}{3}$
π
2π
0.4
0.2
t
2
4
6
8
10

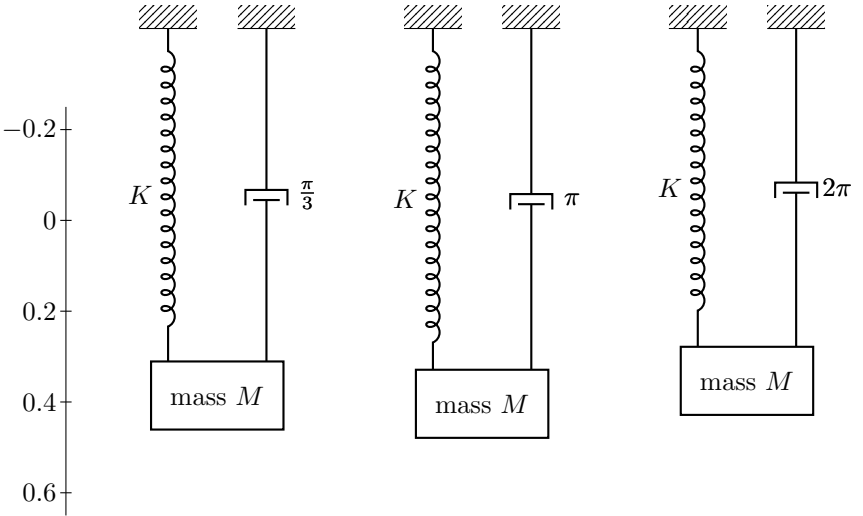
K
$\frac{\pi}{3}$
mass M
K
π
mass M
K
2π
mass M
−0.2
0
0.2
0.4
0.6

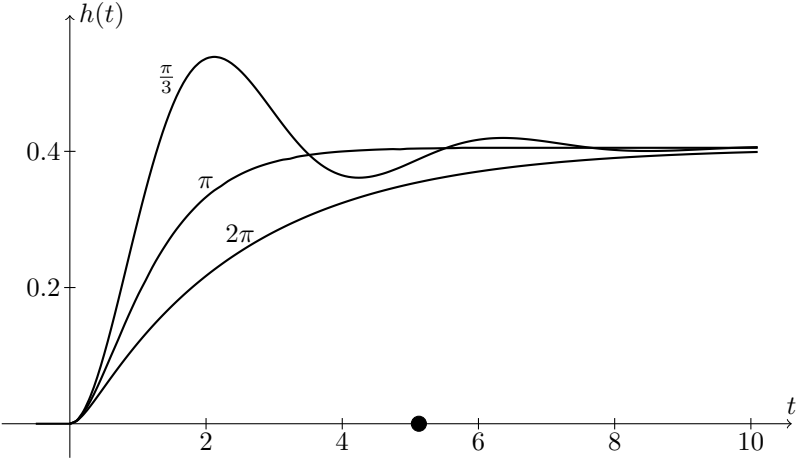
$h(t)$
$\frac{\pi}{3}$
π
2π
0.4
0.2
t
2
4
6
8
10

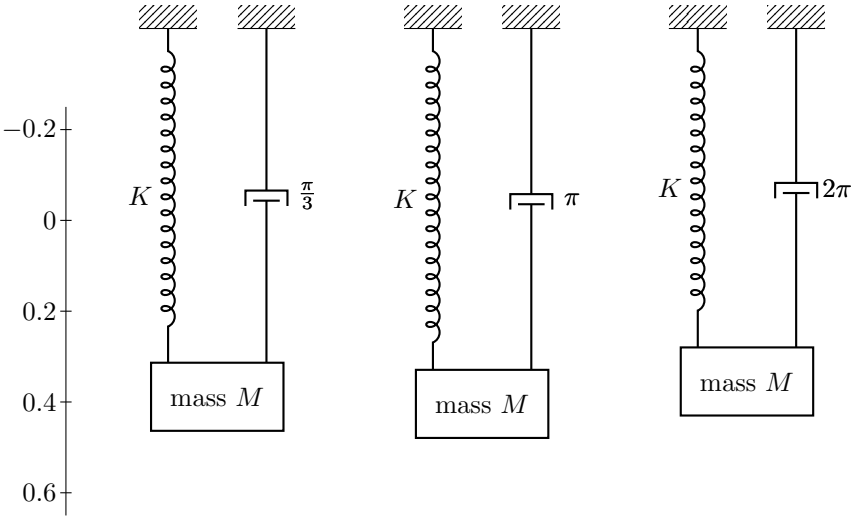
K
$\frac{\pi}{3}$
mass M
K
π
mass M
K
2π
mass M
−0.2
0
0.2
0.4
0.6

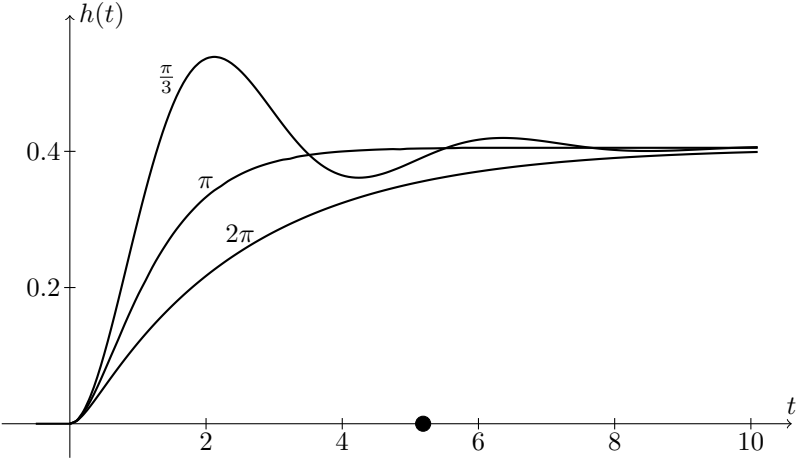
$h(t)$
$\frac{\pi}{3}$
π
2π
0.4
0.2
t
2
4
6
8
10

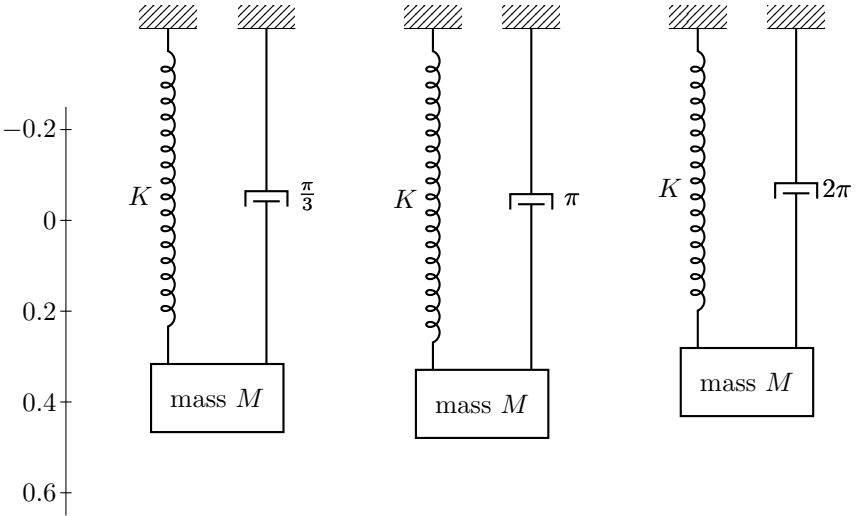
K
$\frac{\pi}{3}$
mass M
K
π
mass M
K
2π
mass M
−0.2
0
0.2
0.4
0.6

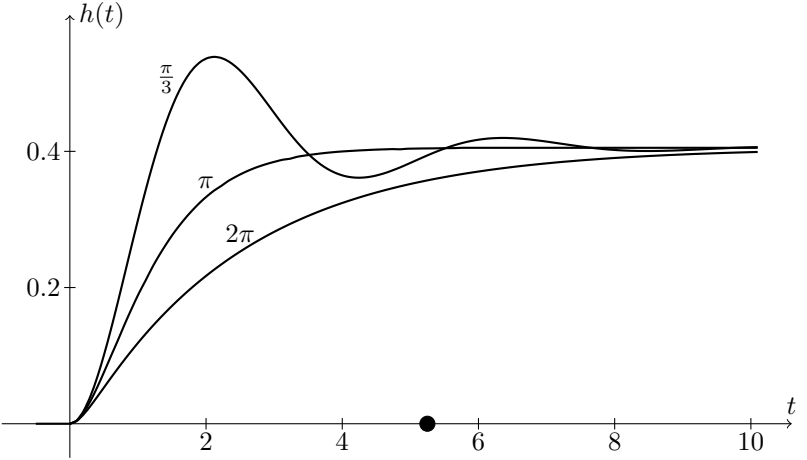
$h(t)$
$\frac{\pi}{3}$
π
2π
0.4
0.2
t
2
4
6
8
10

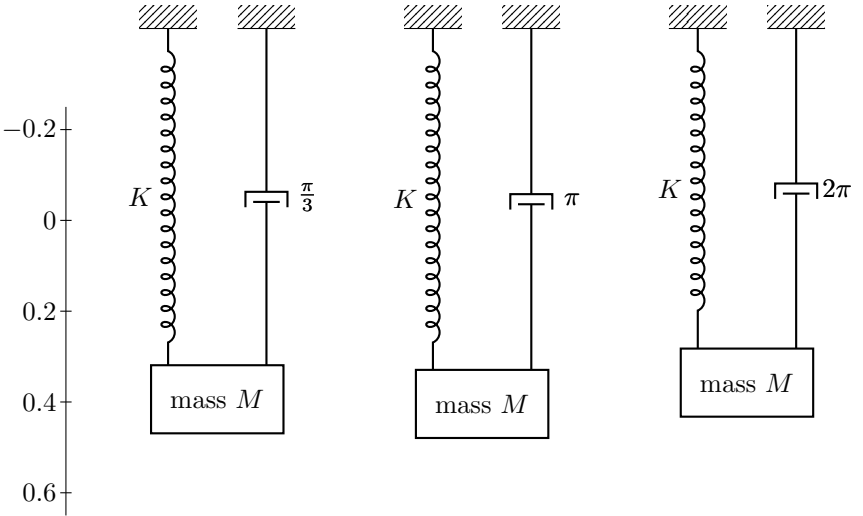
K
$\frac{\pi}{3}$
mass M
K
π
mass M
K
2π
mass M
−0.2
0
0.2
0.4
0.6

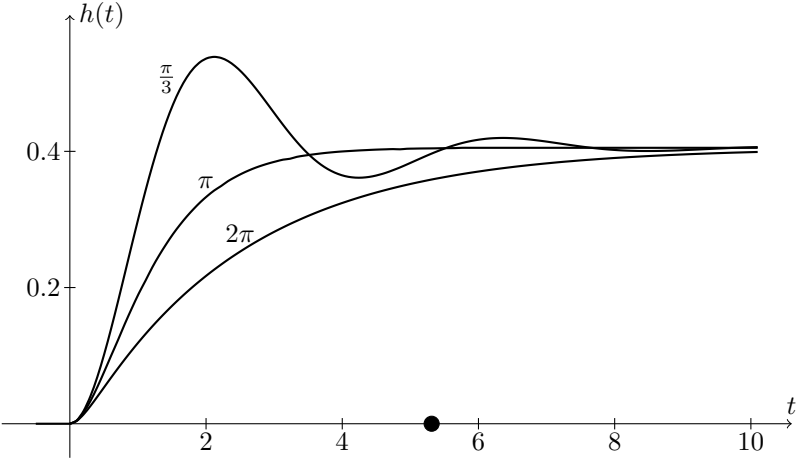
$h(t)$
$\frac{\pi}{3}$
π
2π
0.4
0.2
t
2
4
6
8
10

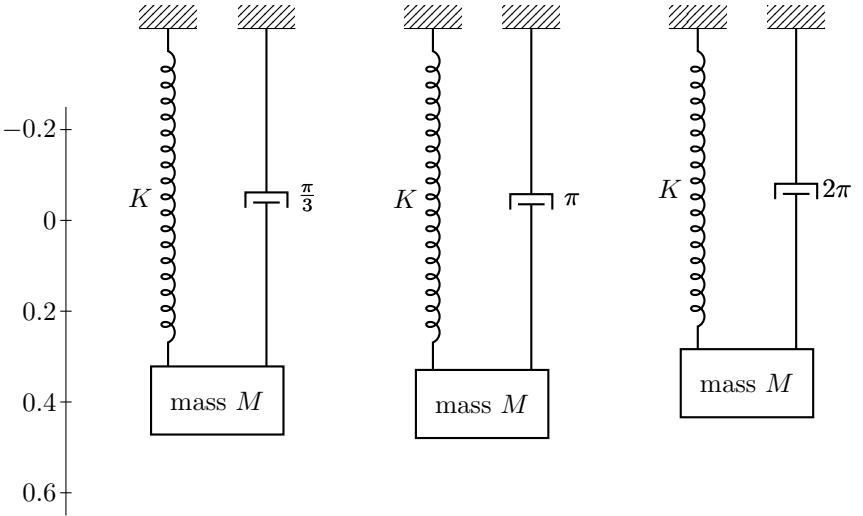
K
$\frac{\pi}{3}$
mass M
K
π
mass M
K
2π
mass M
−0.2
0
0.2
0.4
0.6

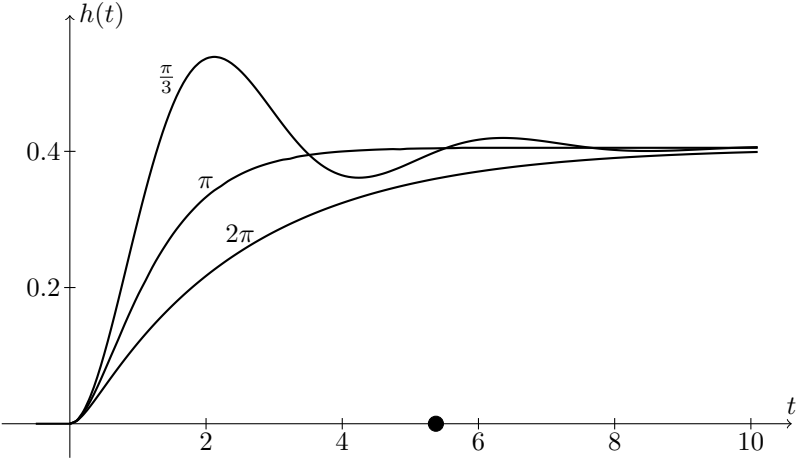
$h(t)$
$\frac{\pi}{3}$
π
2π
0.4
0.2
t
2
4
6
8
10

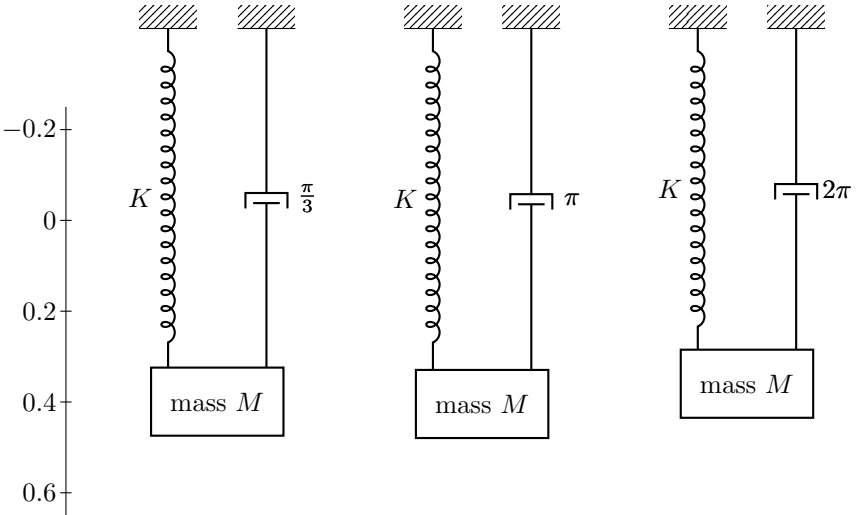
K
$\frac{\pi}{3}$
mass M
K
π
mass M
K
2π
mass M
−0.2
0
0.2
0.4
0.6

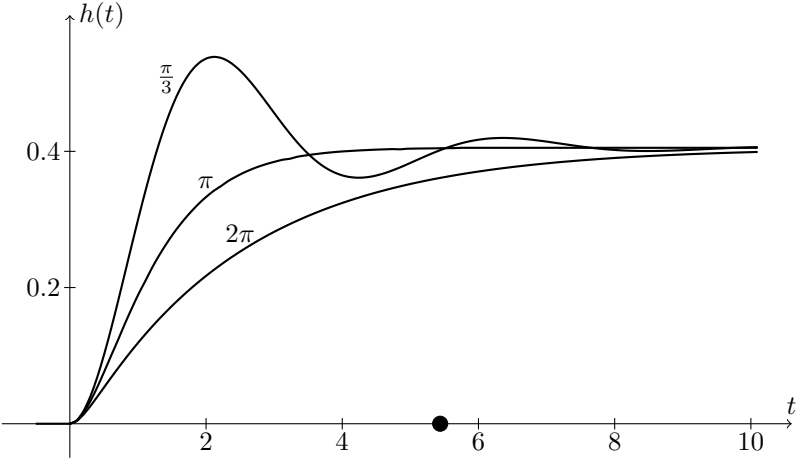
$h(t)$
$\frac{\pi}{3}$
π
2π
0.4
0.2
t
2
4
6
8
10

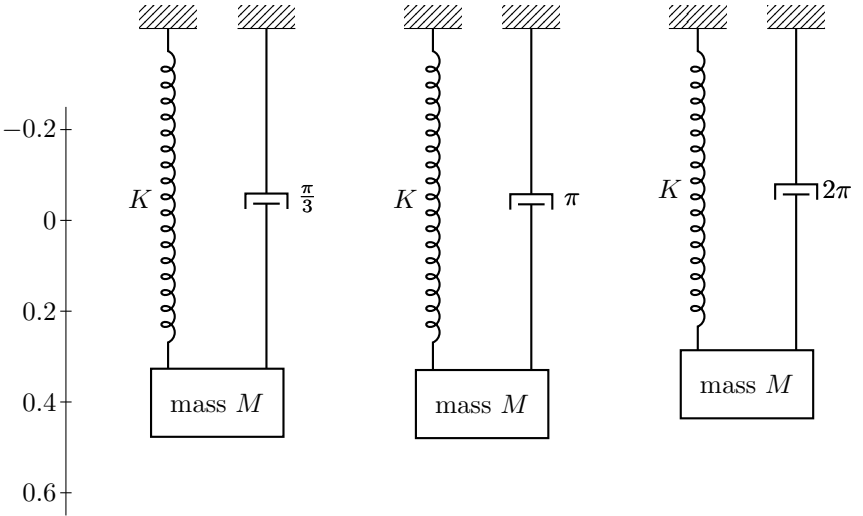
K
$\frac{\pi}{3}$
mass M
K
π
mass M
K
2π
mass M
−0.2
0
0.2
0.4
0.6

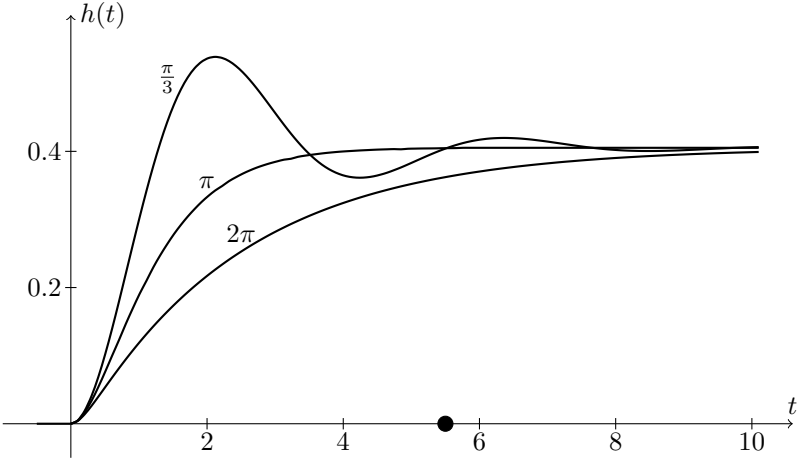
$h(t)$
$\frac{\pi}{3}$
π
2π
0.4
0.2
t
2
4
6
8
10

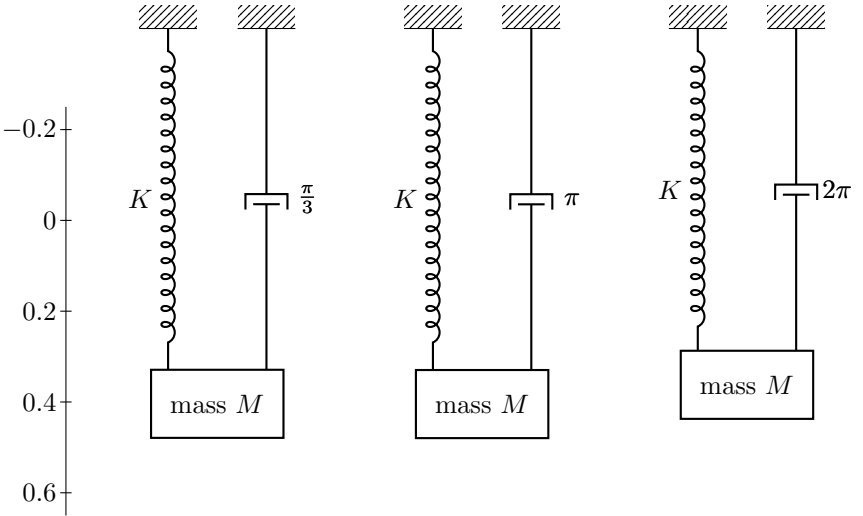
−0.2
0
0.2
0.4
0.6
K
$\frac{\pi}{3}$
mass M
K
π
mass M
K
2π
mass M

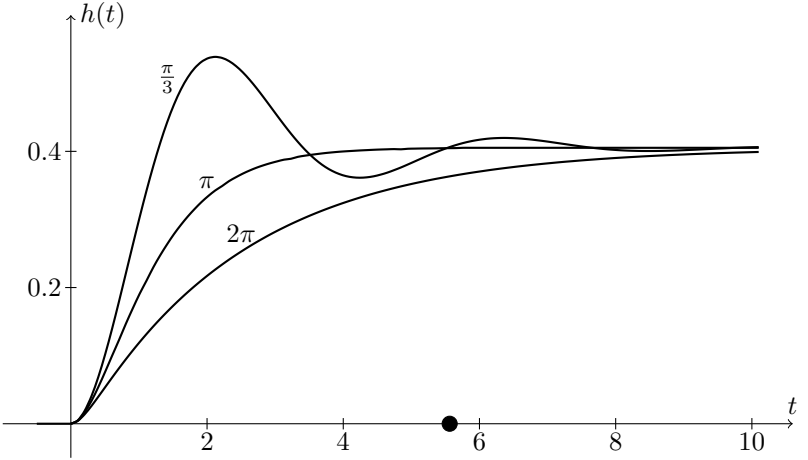
$h(t)$
$\frac{\pi}{3}$
π
2π
0.4
0.2
t
2
4
6
8
10

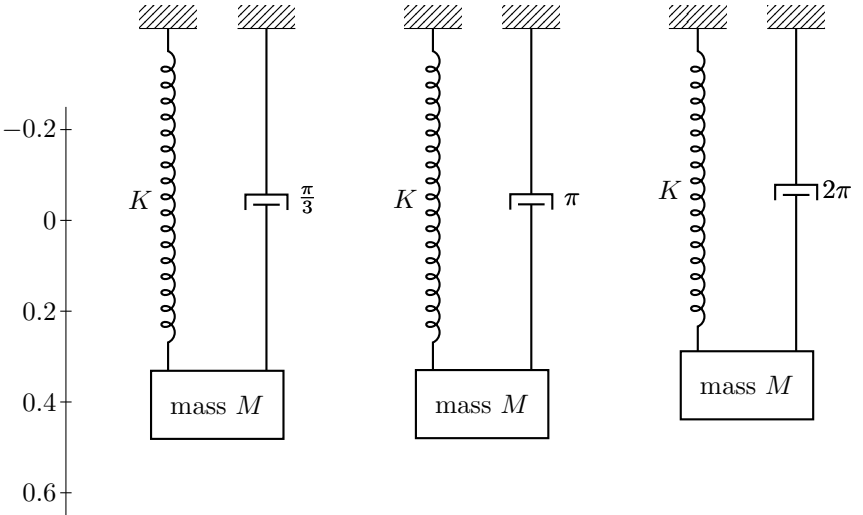
−0.2
0
0.2
0.4
0.6
K
$\frac{\pi}{3}$
mass M
K
π
mass M
K
2π
mass M

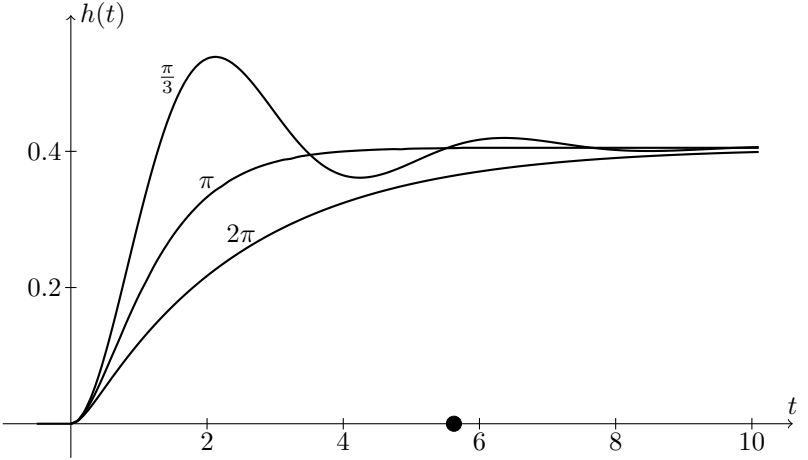
$h(t)$
$\frac{\pi}{3}$
π
2π
0.4
0.2
t
2
4
6
8
10

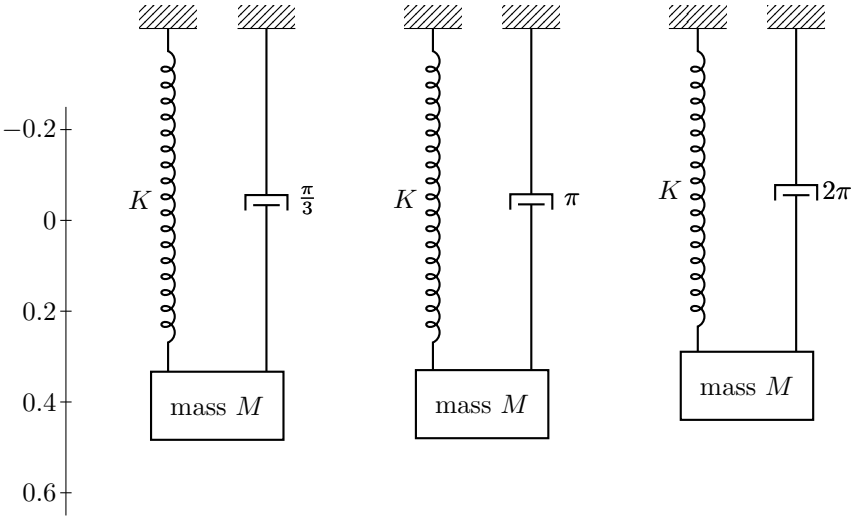
K
$\frac{\pi}{3}$
mass M
K
π
mass M
K
2π
mass M
−0.2
0
0.2
0.4
0.6

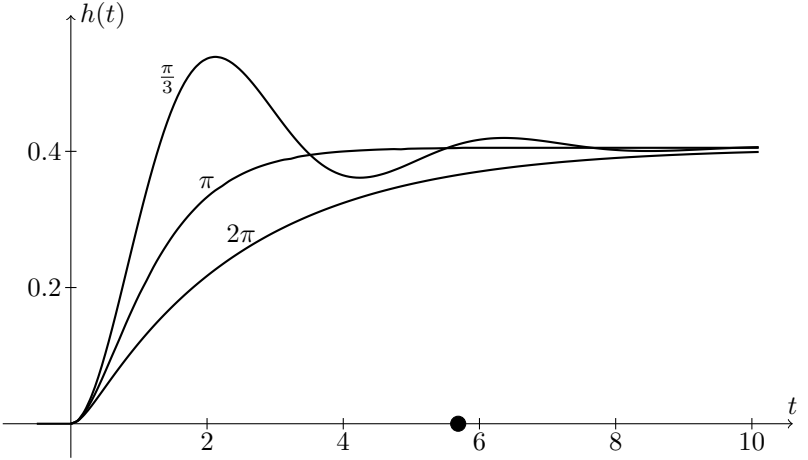
$h(t)$
$\frac{\pi}{3}$
π
2π
0.4
0.2
t
2
4
6
8
10

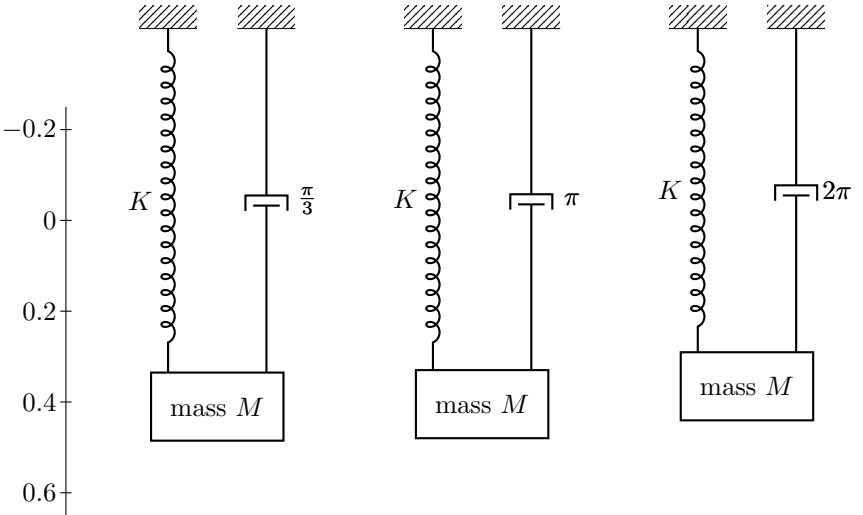
-0.2
0
0.2
0.4
0.6
K
$\frac{\pi}{3}$
mass M
K
π
mass M
K
2π
mass M

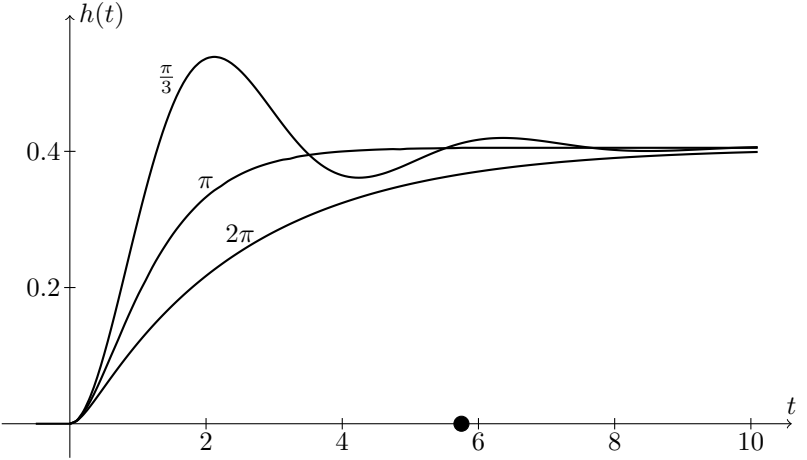
$h(t)$
$\frac{\pi}{3}$
π
2π
0.4
0.2
t
2
4
6
8
10

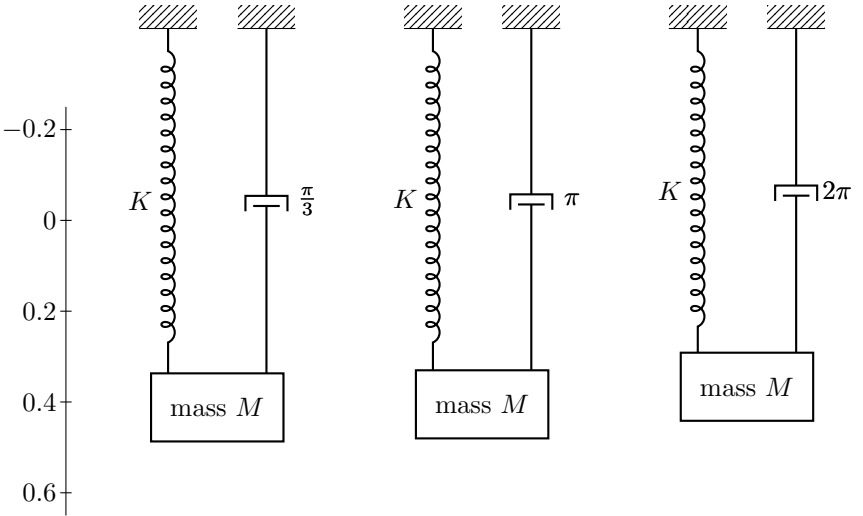
K
$\frac{\pi}{3}$
mass M
K
π
mass M
K
2π
mass M
−0.2
0
0.2
0.4
0.6

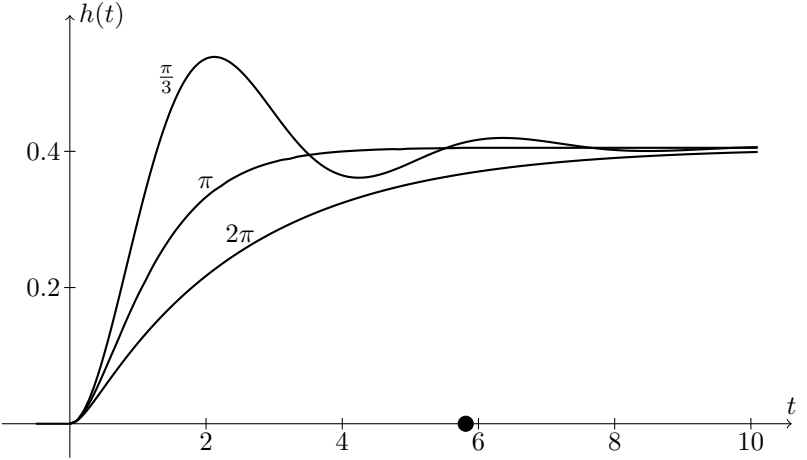
$h(t)$
$\frac{\pi}{3}$
π
2π
0.4
0.2
t
2
4
6
8
10

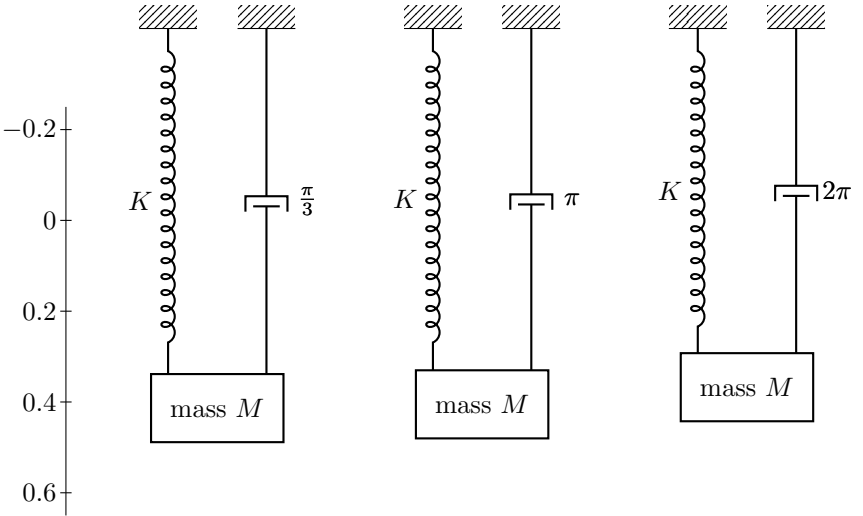
K
$\frac{\pi}{3}$
mass M
K
π
mass M
K
2π
mass M
−0.2
0
0.2
0.4
0.6

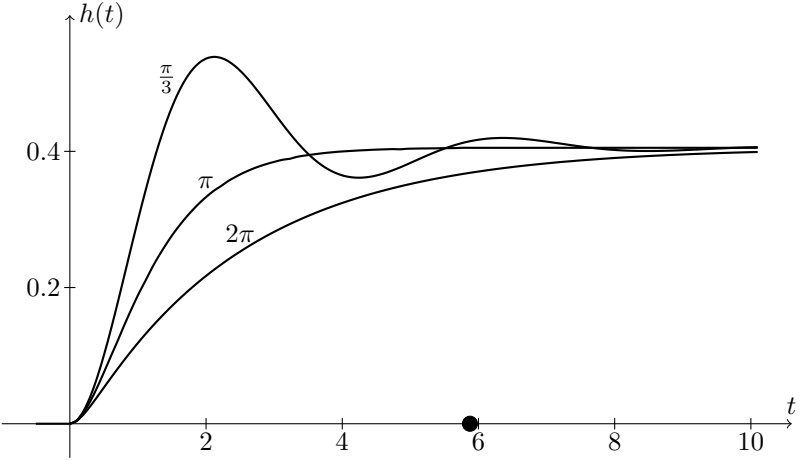
$h(t)$
$\frac{\pi}{3}$
π
2π
0.4
0.2
t
2
4
6
8
10

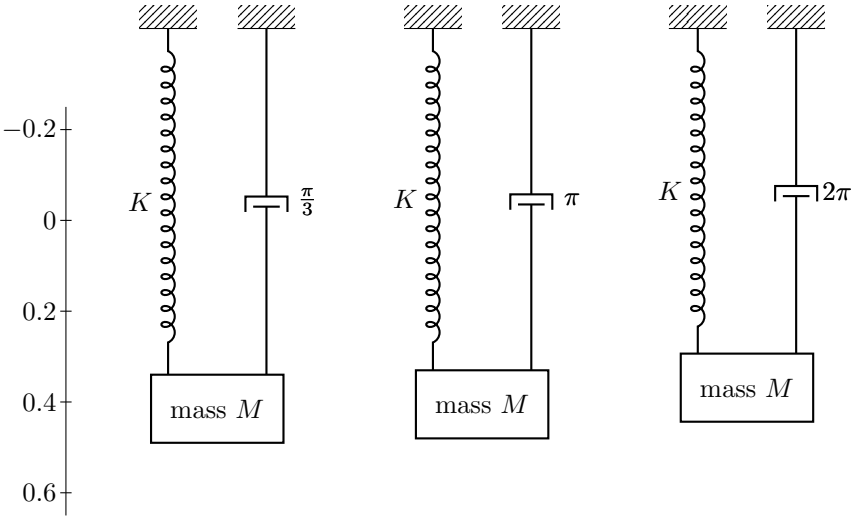
K
$\frac{\pi}{3}$
mass M
K
π
mass M
K
2π
mass M
−0.2
0
0.2
0.4
0.6

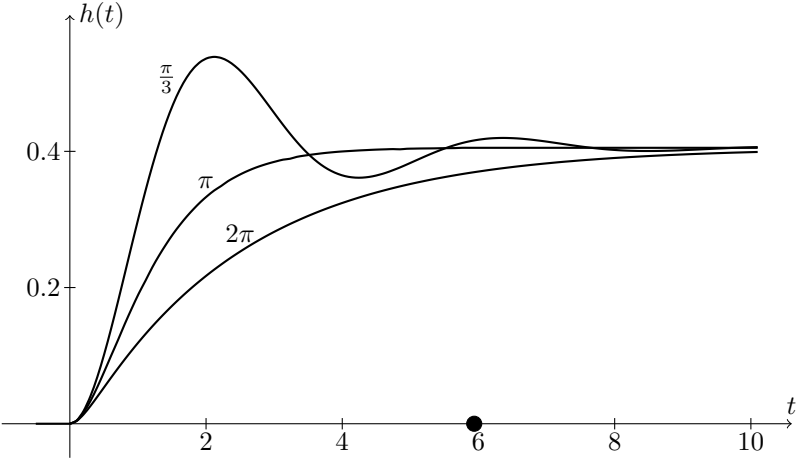
$h(t)$
$\frac{\pi}{3}$
π
2π
0.4
0.2
t
2
4
6
8
10

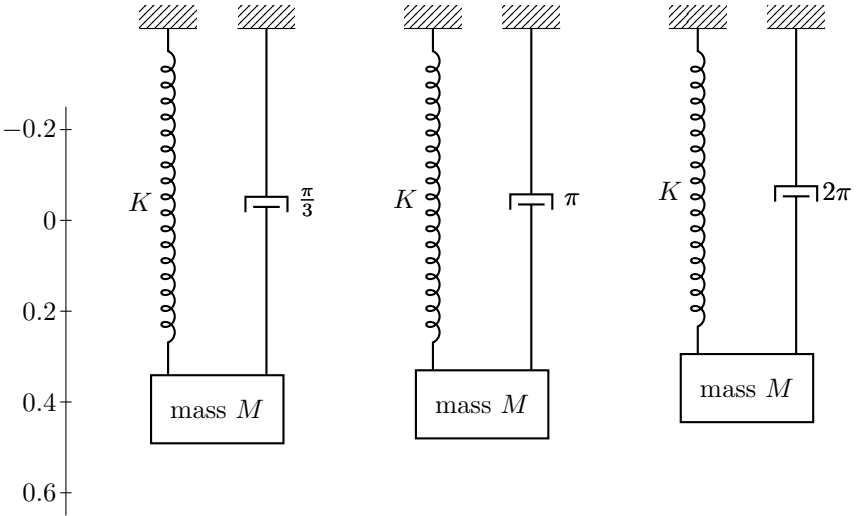
K
$\frac{\pi}{3}$
mass M
K
π
mass M
K
2π
mass M
−0.2
0
0.2
0.4
0.6

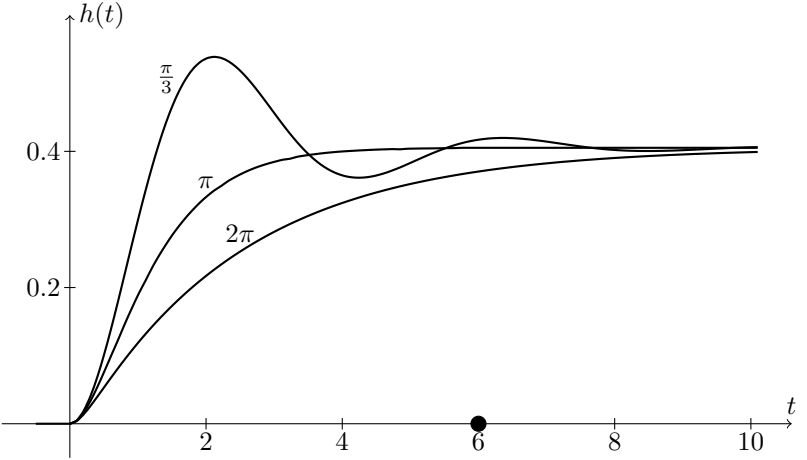
$h(t)$
$\frac{\pi}{3}$
π
2π
0.4
0.2
t
2
4
6
8
10

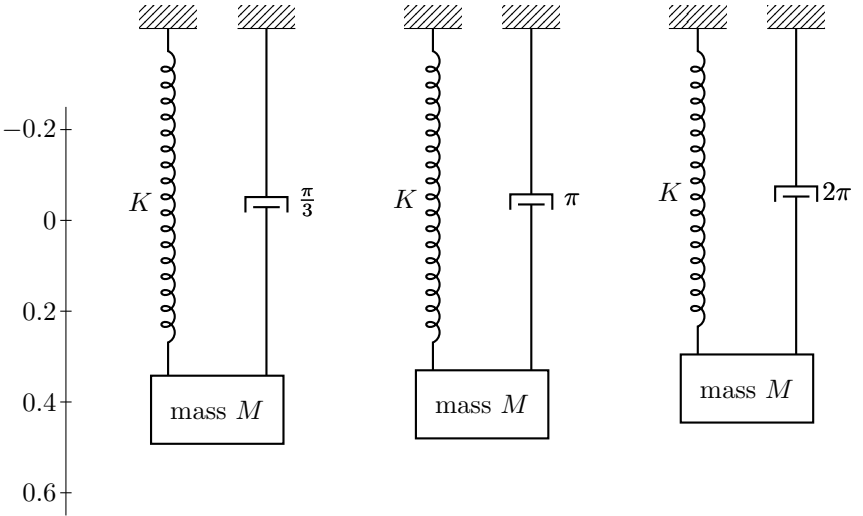
K
$\frac{\pi}{3}$
mass M
K
π
mass M
K
2π
mass M
−0.2
0
0.2
0.4
0.6

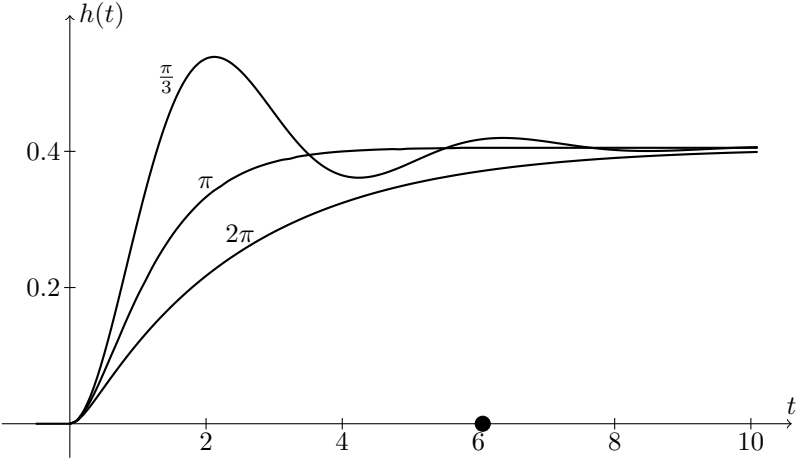
$h(t)$
$\frac{\pi}{3}$
π
2π
0.4
0.2
t
2
4
6
8
10

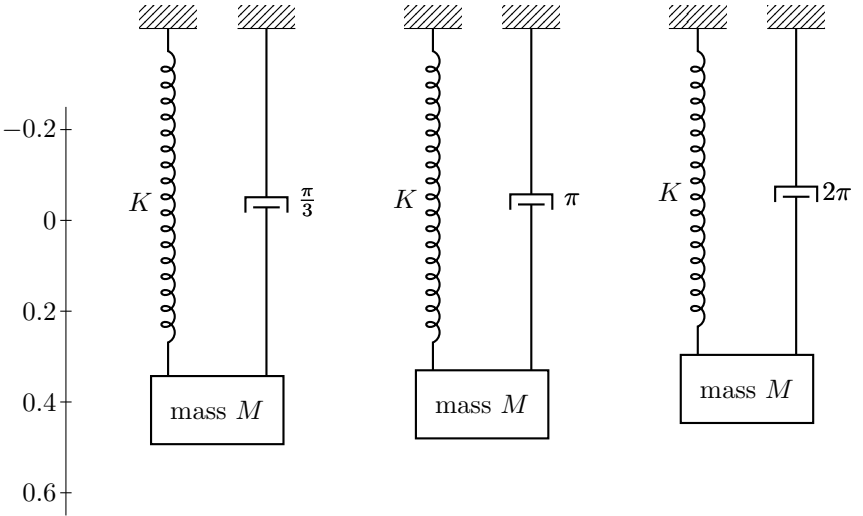
K
$\frac{\pi}{3}$
mass M
K
π
mass M
K
2π
mass M
−0.2
0
0.2
0.4
0.6

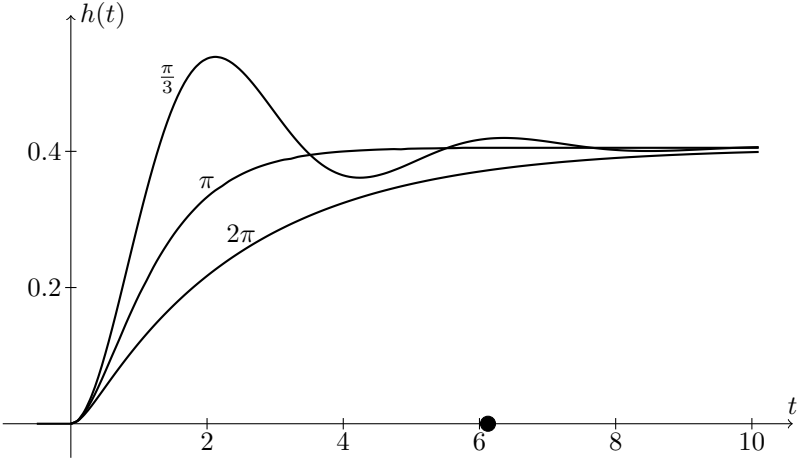
$h(t)$
$\frac{\pi}{3}$
π
2π
0.4
0.2
t
2
4
6
8
10

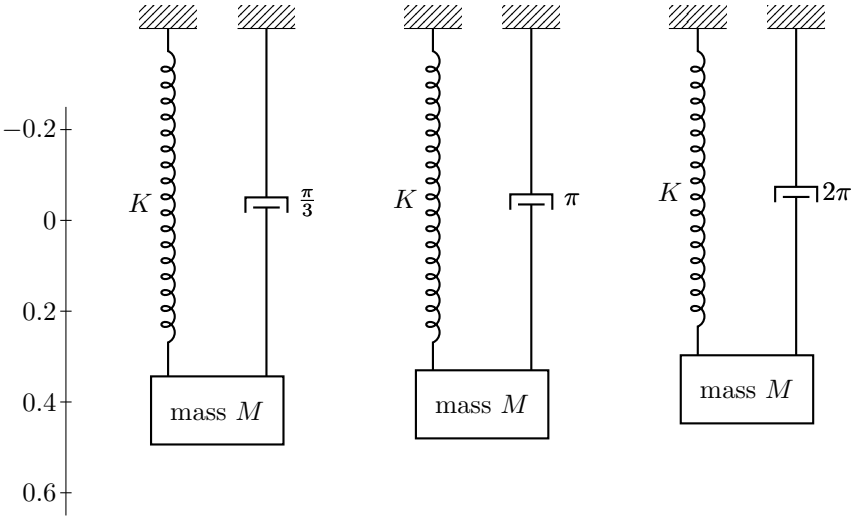
K
$\frac{\pi}{3}$
mass M
K
π
mass M
K
2π
mass M
−0.2
0
0.2
0.4
0.6

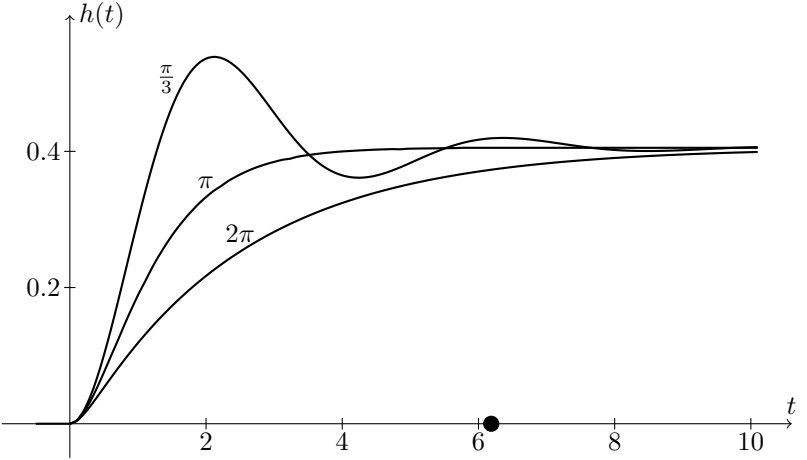
$h(t)$
$\frac{\pi}{3}$
π
2π
0.4
0.2
t
2
4
6
8
10

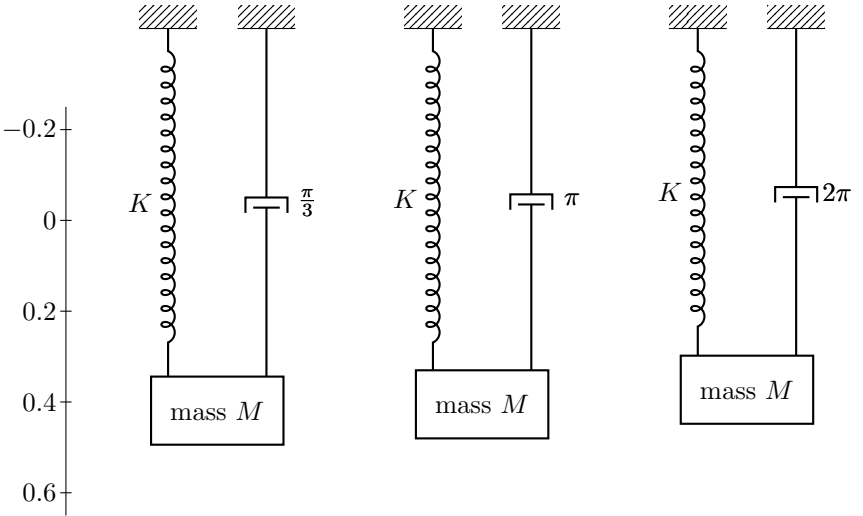
K
$\frac{\pi}{3}$
mass M
K
π
mass M
K
2π
mass M
−0.2
0
0.2
0.4
0.6

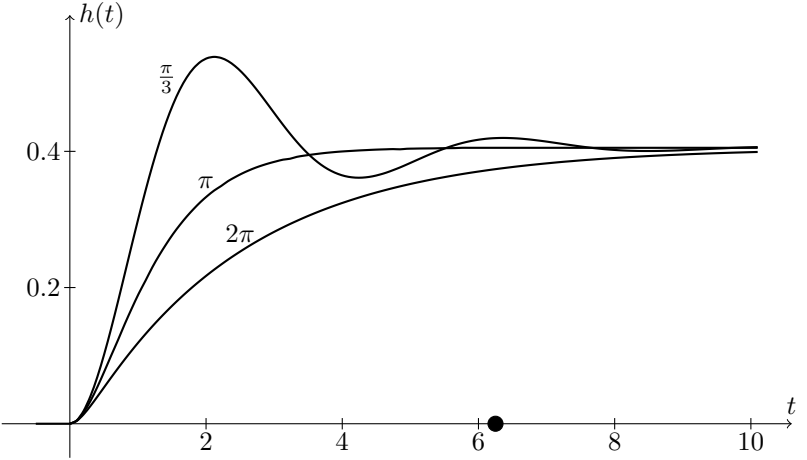
$h(t)$
$\frac{\pi}{3}$
π
2π
0.4
0.2
t
2
4
6
8
10

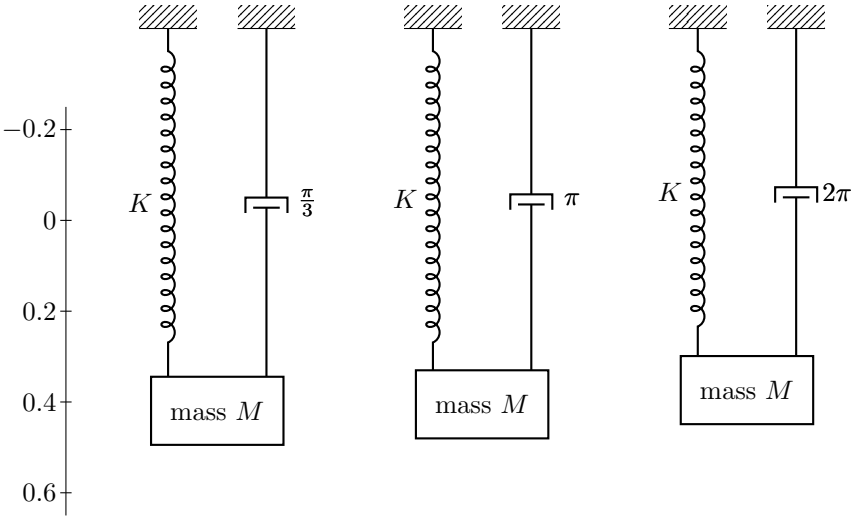
K
$\frac{\pi}{3}$
mass M
K
π
mass M
K
2π
mass M
−0.2
0
0.2
0.4
0.6

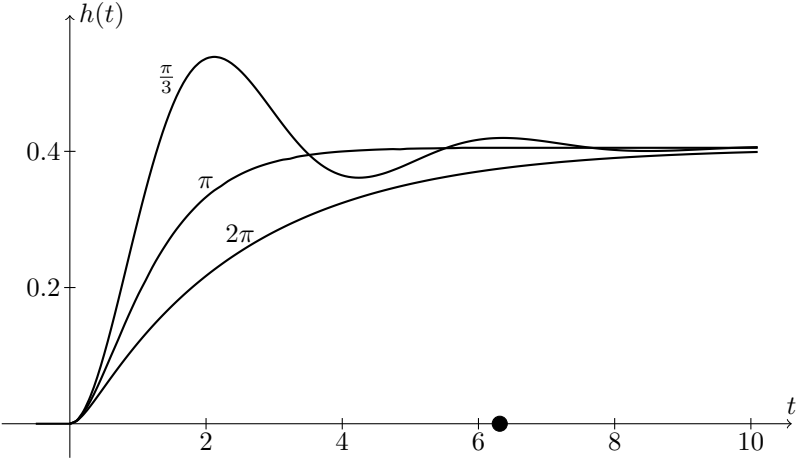
$h(t)$
$\frac{\pi}{3}$
π
2π
0.4
0.2
t
2
4
6
8
10

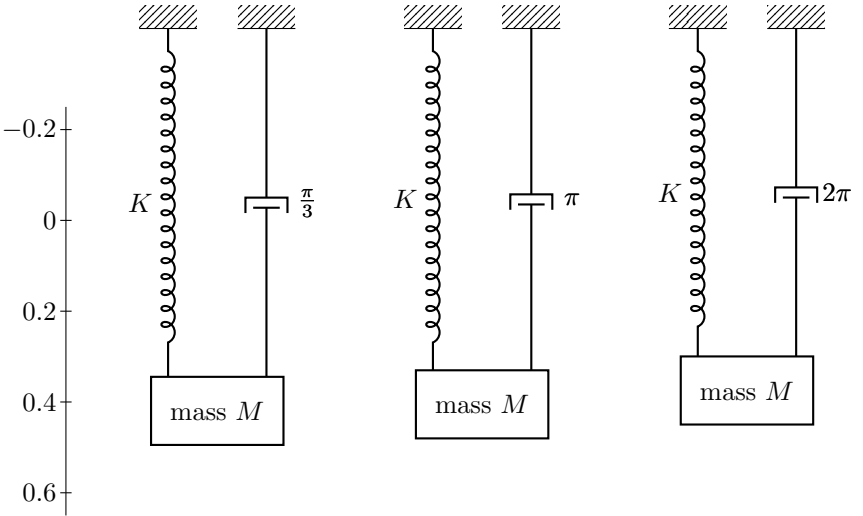
-0.2
0
0.2
0.4
0.6
K
$\frac{\pi}{3}$
mass M
K
π
mass M
K
2π
mass M

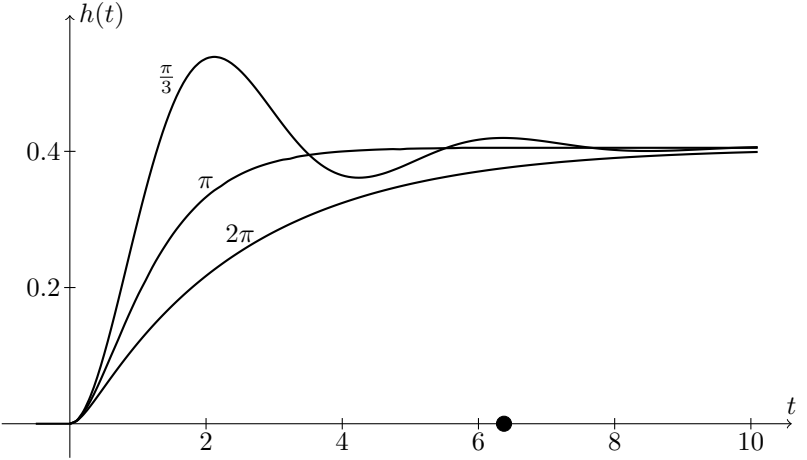
$h(t)$
$\frac{\pi}{3}$
π
2π
0.4
0.2
t
2
4
6
8
10

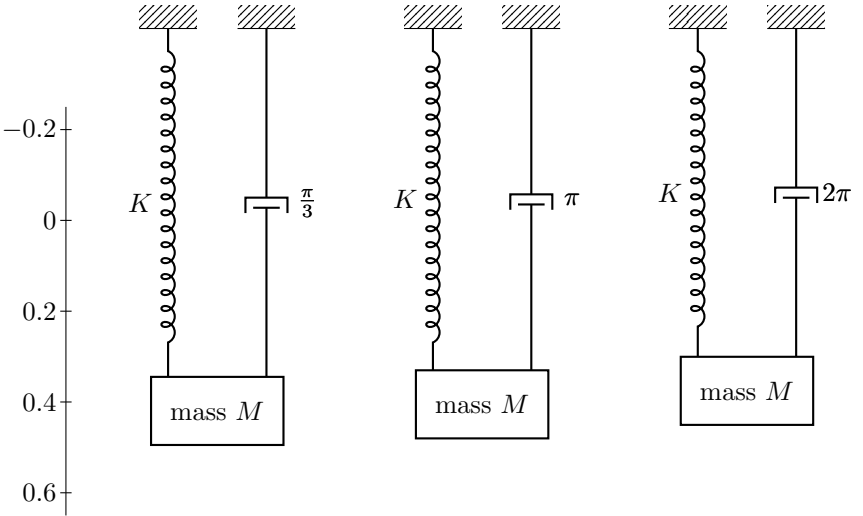
K
$\frac{\pi}{3}$
mass M
K
π
mass M
K
2π
mass M
−0.2
0
0.2
0.4
0.6

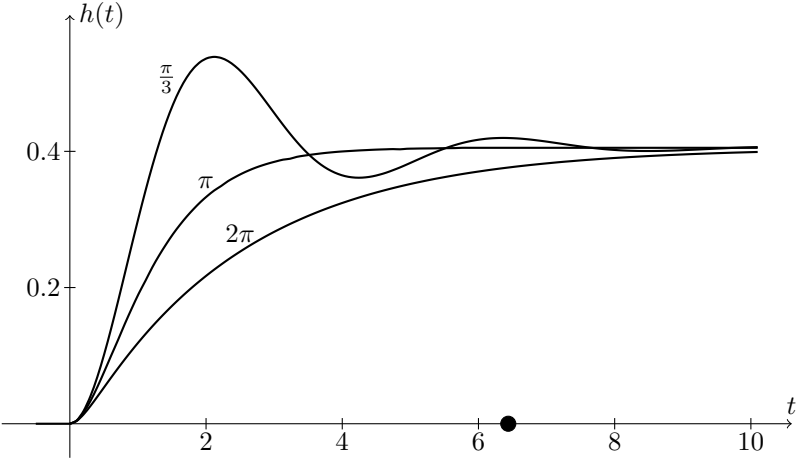
$h(t)$
$\frac{\pi}{3}$
π
2π
0.4
0.2
t
2
4
6
8
10

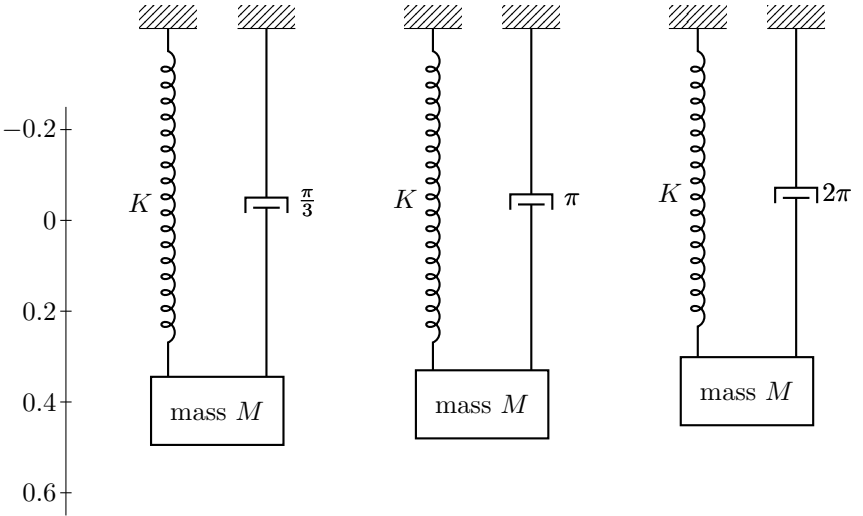
-0.2
0
0.2
0.4
0.6
K
$\frac{\pi}{3}$
mass M
K
π
mass M
K
2π
mass M

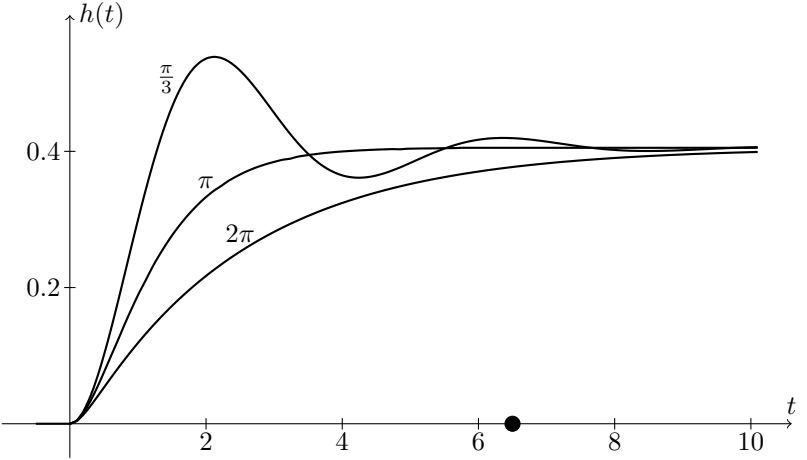
$h(t)$
$\frac{\pi}{3}$
π
2π
0.4
0.2
t
2
4
6
8
10

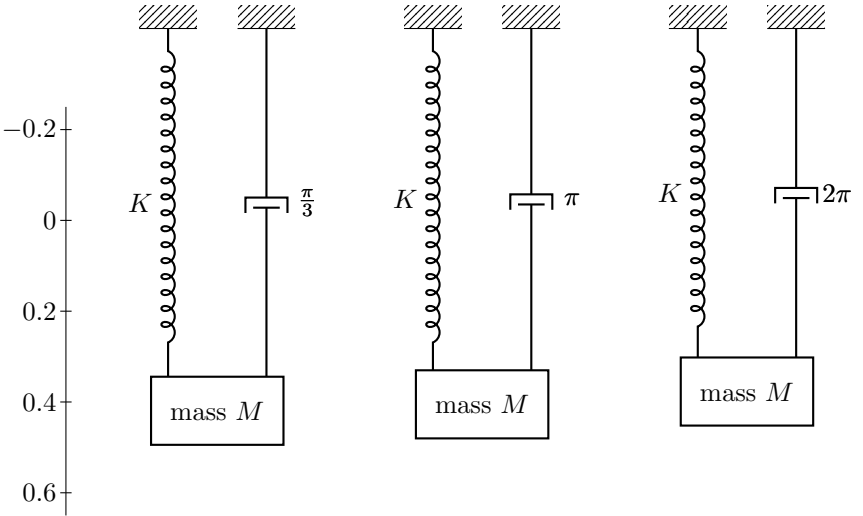
K
$\frac{\pi}{3}$
mass M
K
π
mass M
K
2π
mass M
−0.2
0
0.2
0.4
0.6

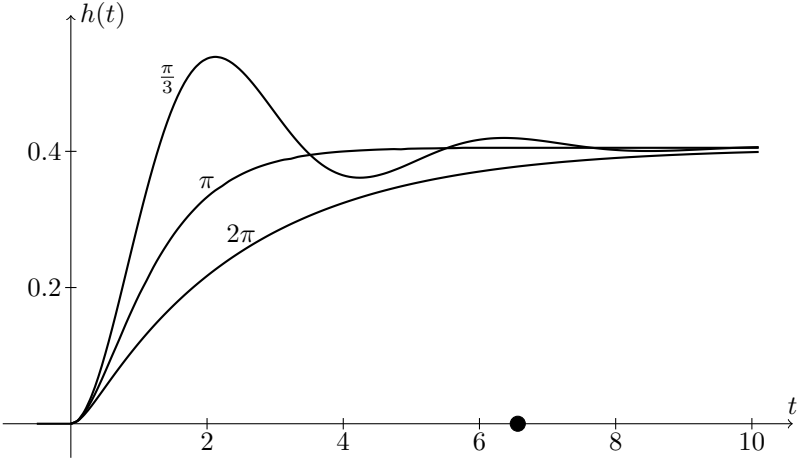
$h(t)$
$\frac{\pi}{3}$
π
2π
0.4
0.2
t
2
4
6
8
10

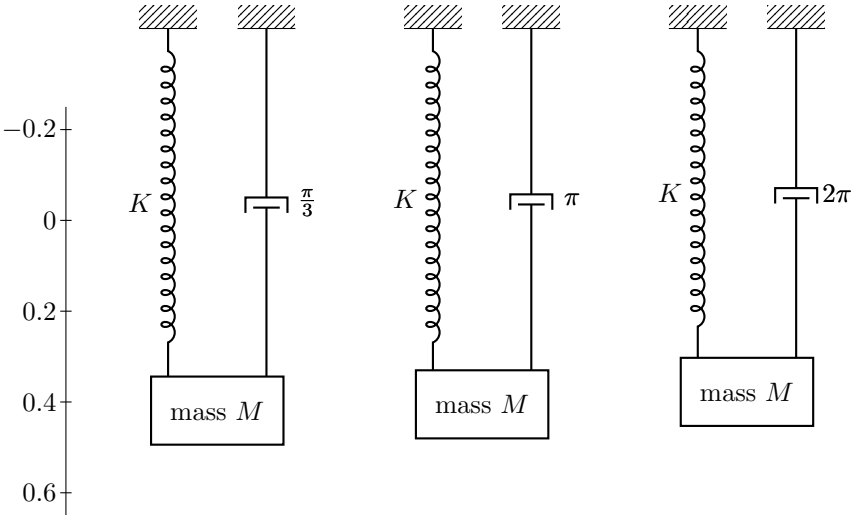
−0.2
0
0.2
0.4
0.6
K
$\frac{\pi}{3}$
mass M
K
π
mass M
K
2π
mass M

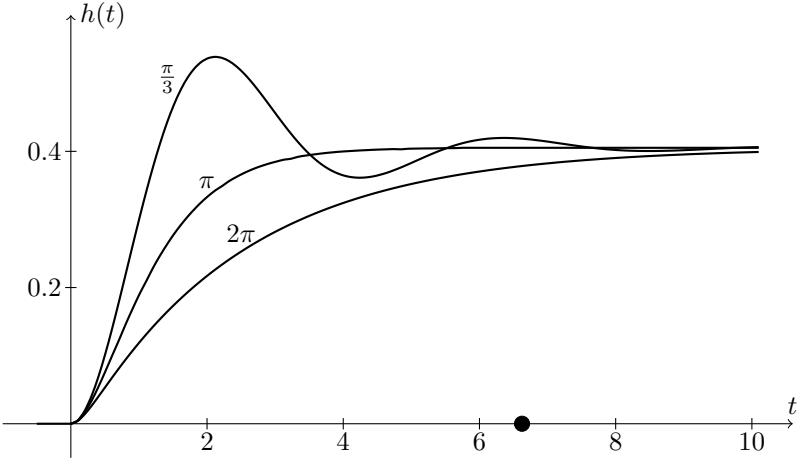
$h(t)$
$\frac{\pi}{3}$
π
2π
0.4
0.2
t
2
4
6
8
10

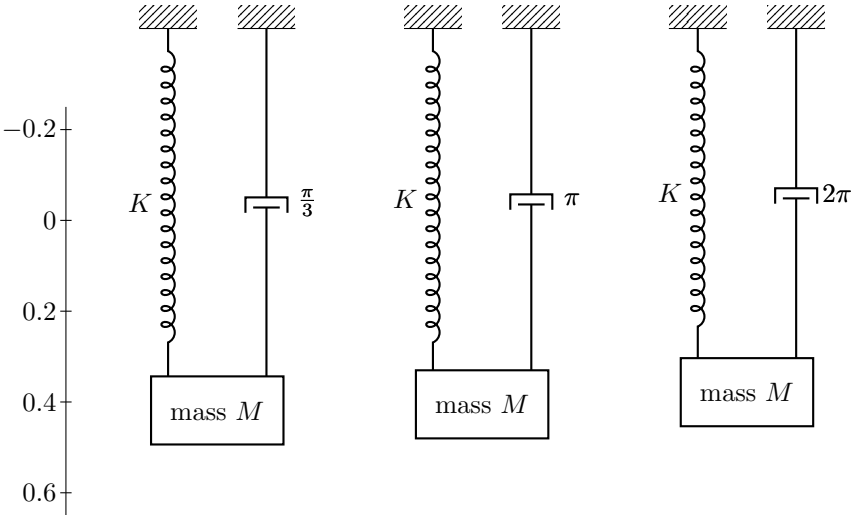
−0.2
0
0.2
0.4
0.6
K
$\frac{\pi}{3}$
mass M
K
π
mass M
K
2π
mass M

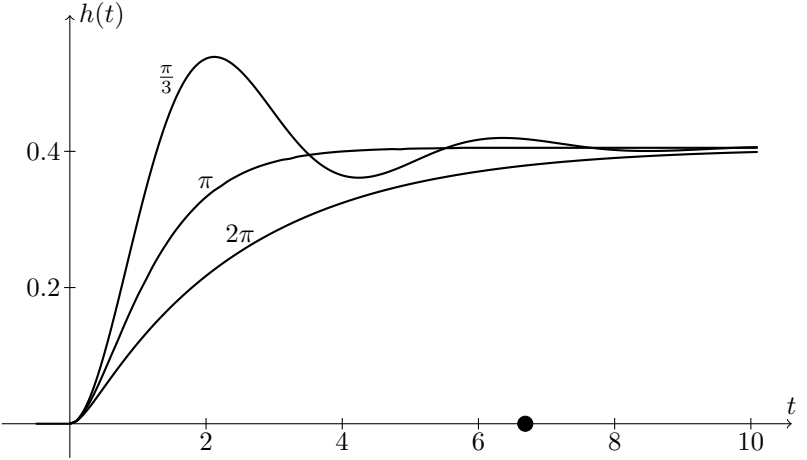
$h(t)$
$\frac{\pi}{3}$
π
2π
0.4
0.2
t
2
4
6
8
10

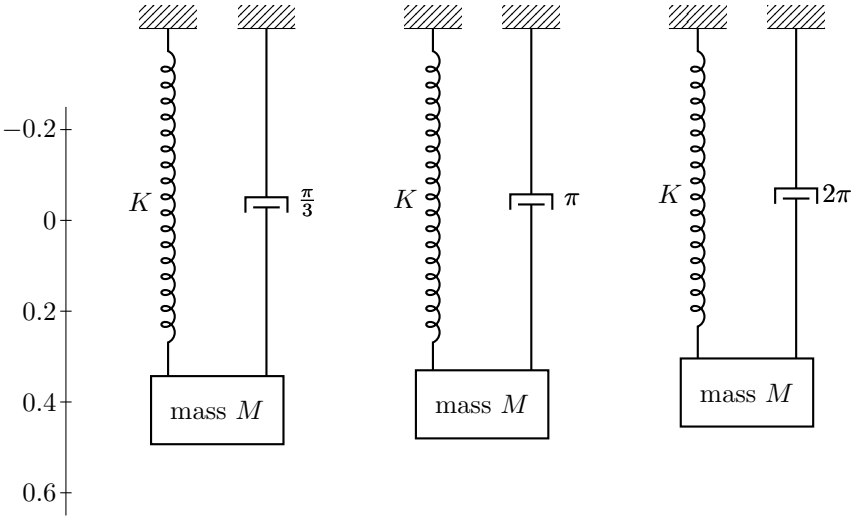
K
$\frac{\pi}{3}$
mass M
K
π
mass M
K
2π
mass M
−0.2
0
0.2
0.4
0.6

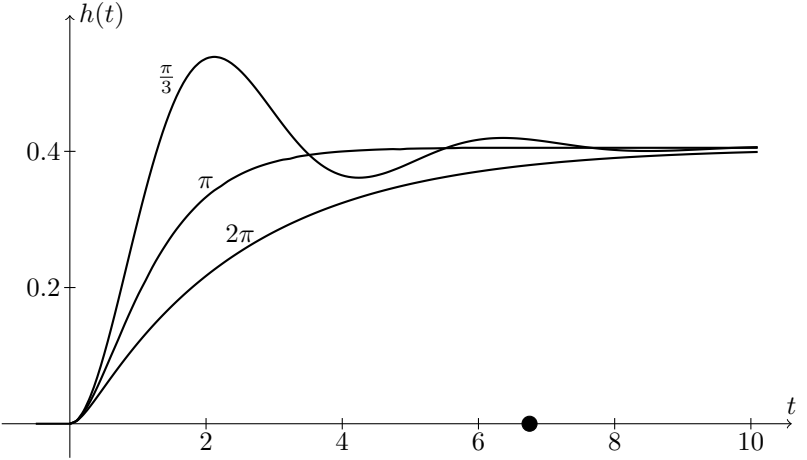
$h(t)$
$\frac{\pi}{3}$
π
2π
0.4
0.2
t
2
4
6
8
10

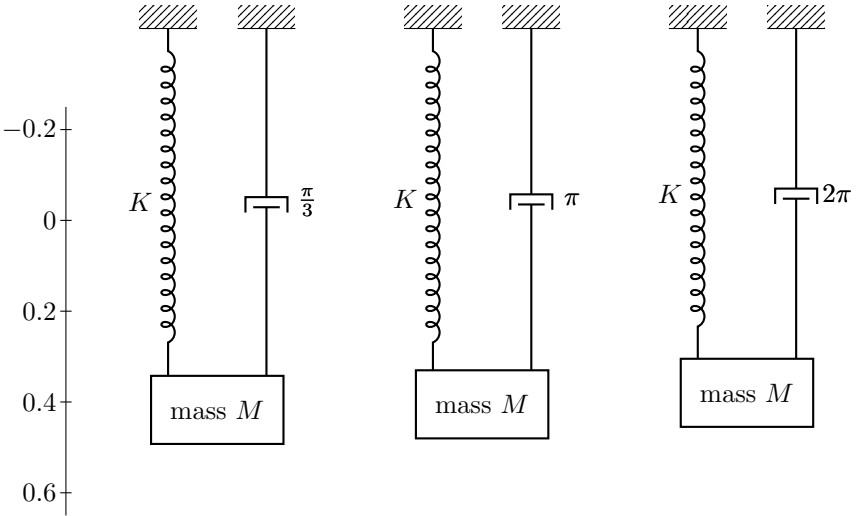
−0.2
0
0.2
0.4
0.6
K
$\frac{\pi}{3}$
mass M
K
π
mass M
K
2π
mass M

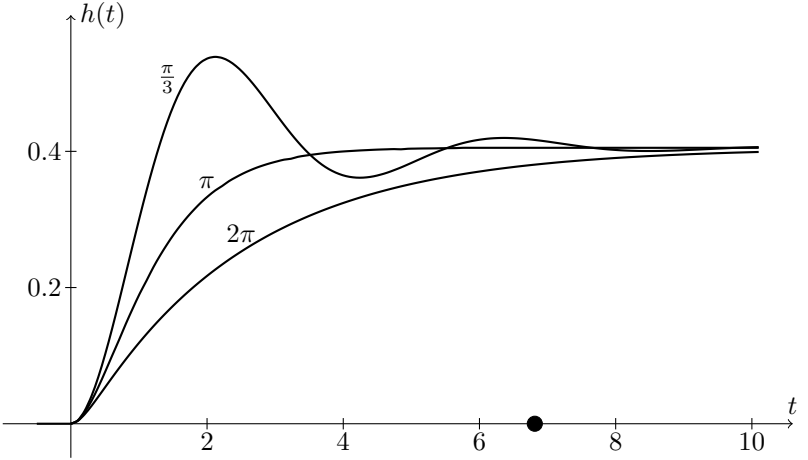
$h(t)$
$\frac{\pi}{3}$
π
2π
0.4
0.2
t
2
4
6
8
10

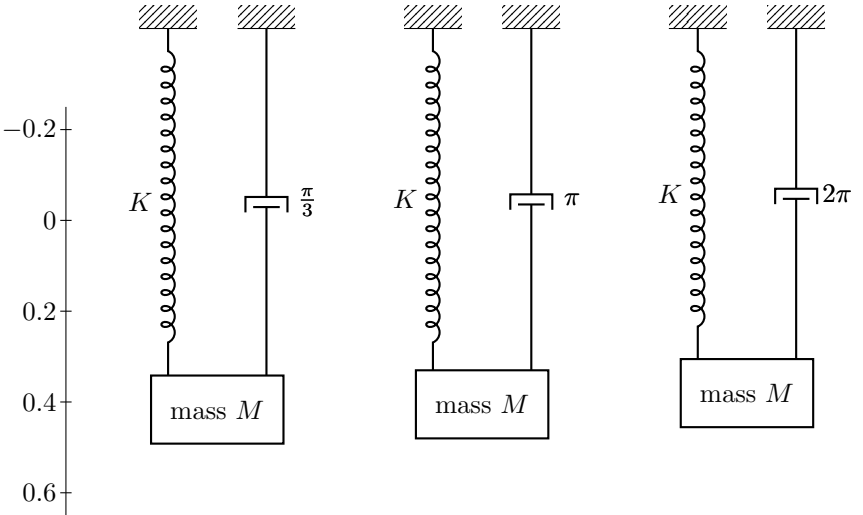
−0.2
0
0.2
0.4
0.6
K
$\frac{\pi}{3}$
mass M
K
π
mass M
K
2π
mass M

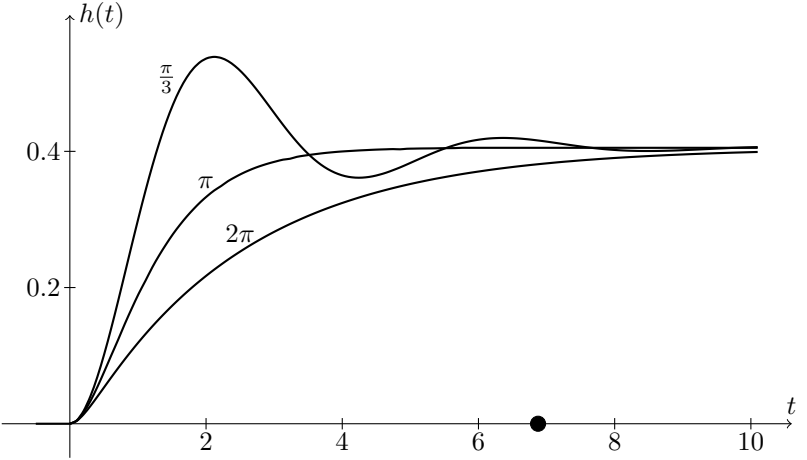
$h(t)$
$\frac{\pi}{3}$
π
2π
0.4
0.2
t
2
4
6
8
10

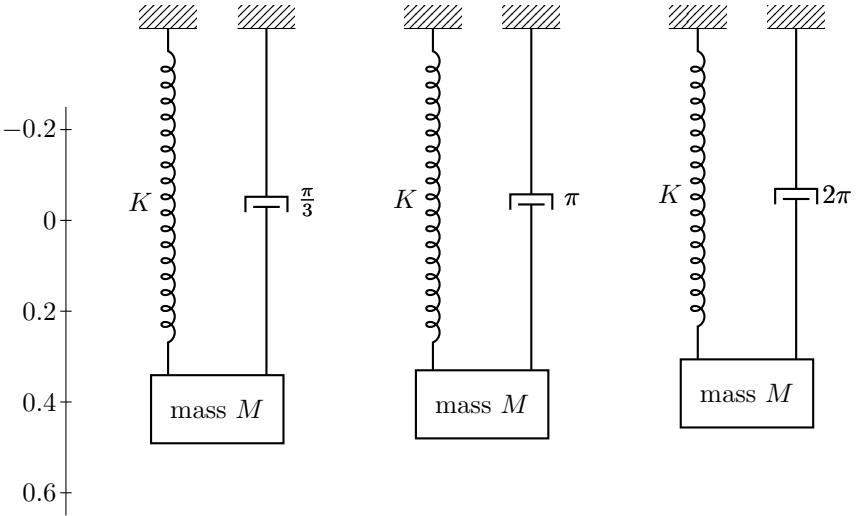
K
$\frac{\pi}{3}$
mass M
K
π
mass M
K
2π
mass M
−0.2
0
0.2
0.4
0.6

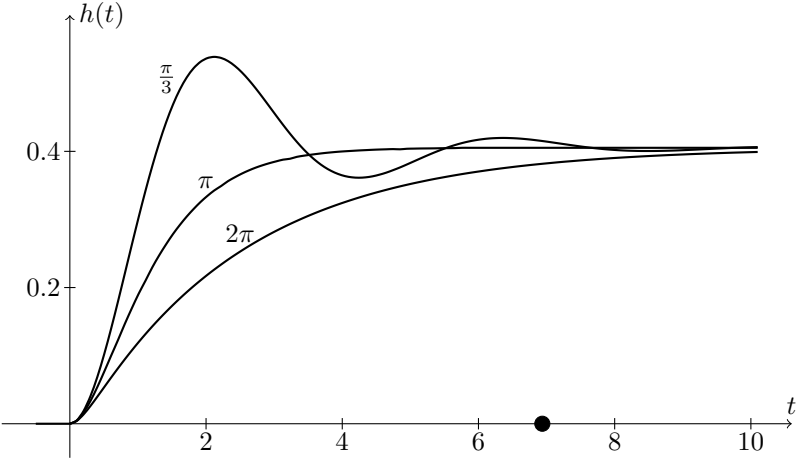
$h(t)$
$\frac{\pi}{3}$
π
2π
0.4
0.2
t
2
4
6
8
10

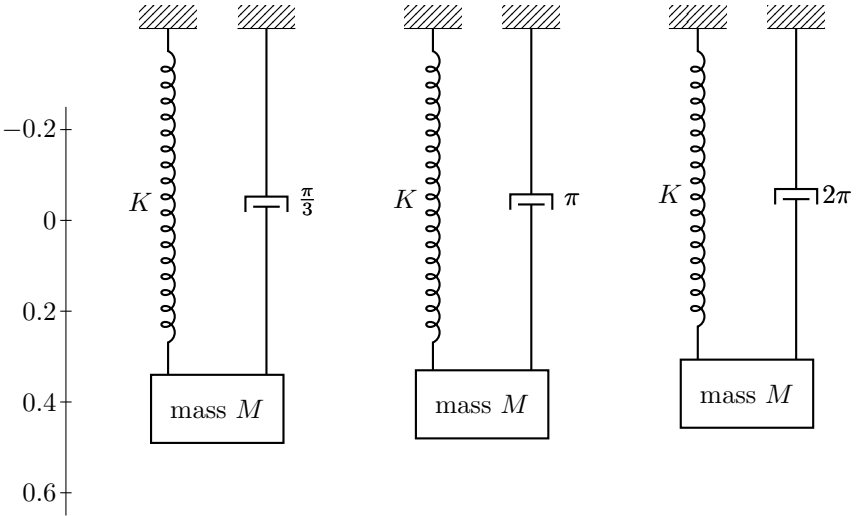
K
$\frac{\pi}{3}$
mass M
K
π
mass M
K
2π
mass M
−0.2
0
0.2
0.4
0.6

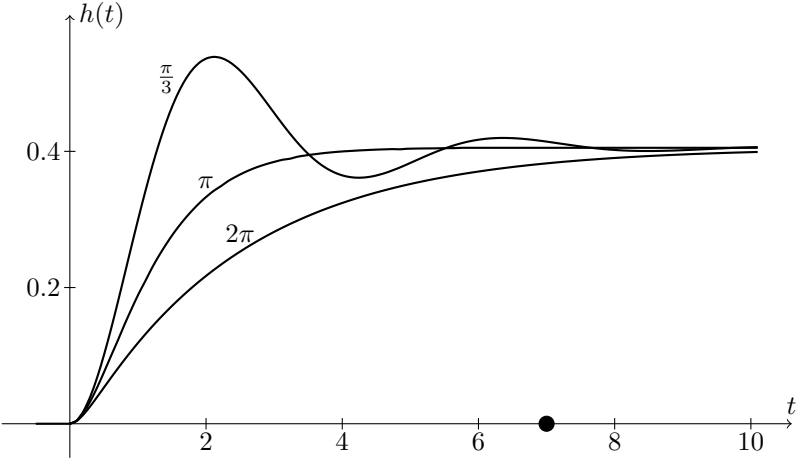
$h(t)$
$\frac{\pi}{3}$
π
2π
0.4
0.2
t
2
4
6
8
10

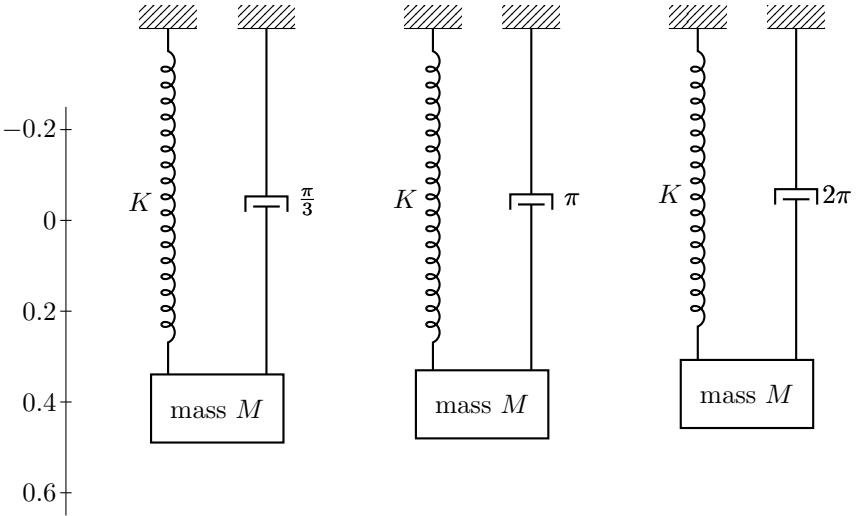
K
$\frac{\pi}{3}$
mass M
K
π
mass M
K
2π
mass M
−0.2
0
0.2
0.4
0.6

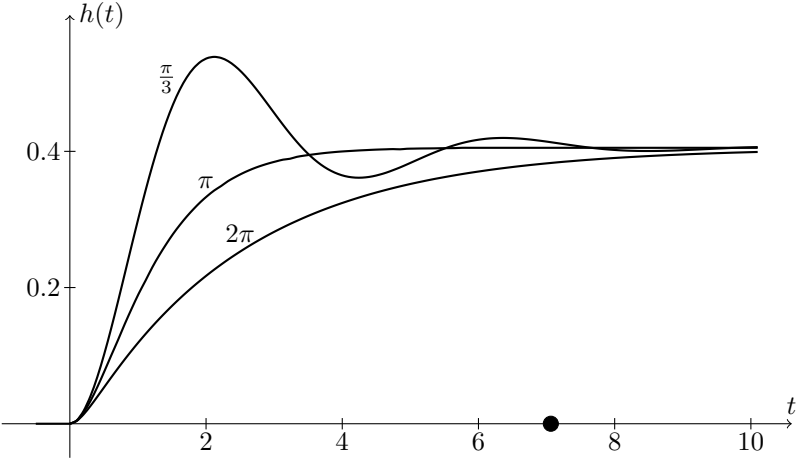
$h(t)$
$\frac{\pi}{3}$
π
2π
0.4
0.2
t
2
4
6
8
10

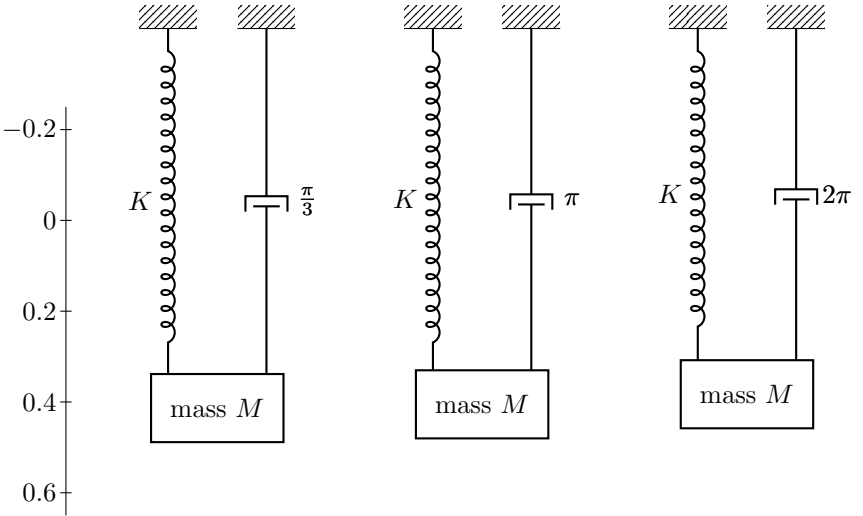
K
$\frac{\pi}{3}$
mass M
K
π
mass M
K
2π
mass M
−0.2
0
0.2
0.4
0.6

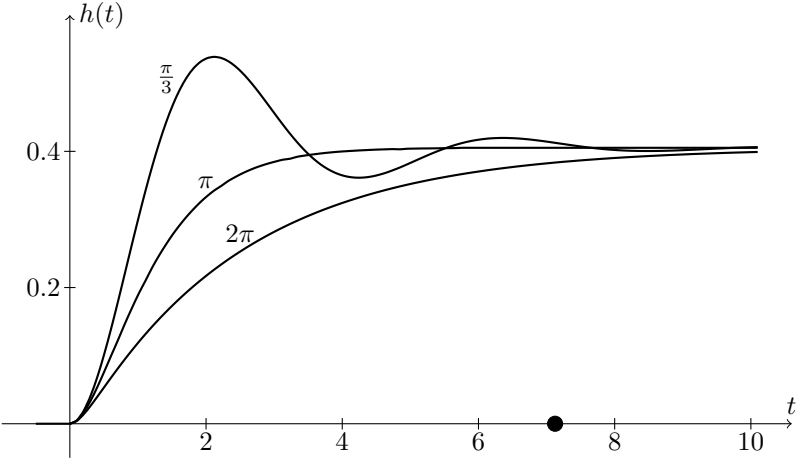
h(t)
π/3
π
2π
0.4
0.2
t
2
4
6
8
10

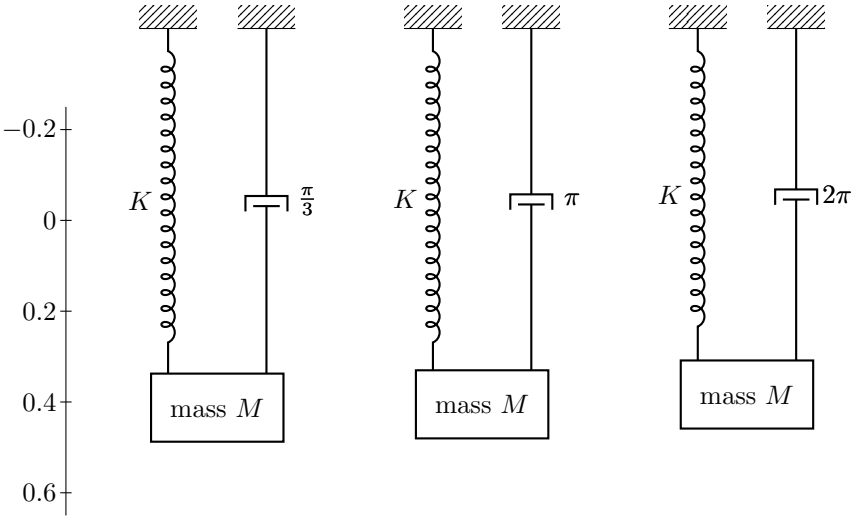
−0.2
0
0.2
0.4
0.6
K
π/3
mass M
K
π
mass M
K
2π
mass M

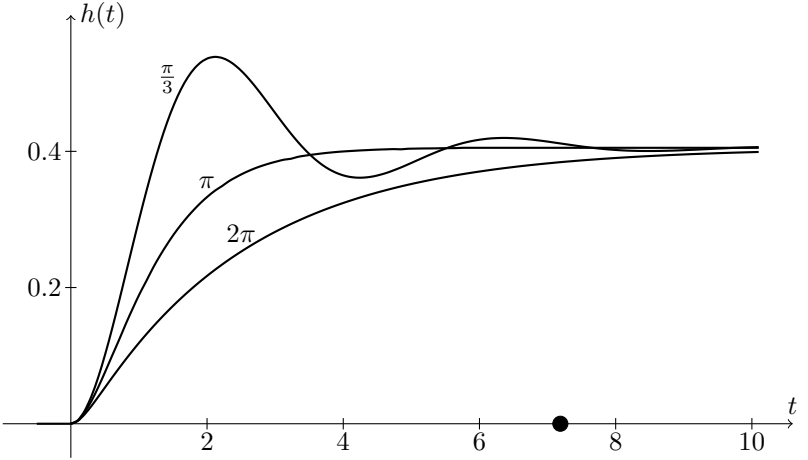
$h(t)$
$\frac{\pi}{3}$
π
2π
0.4
0.2
t
2
4
6
8
10

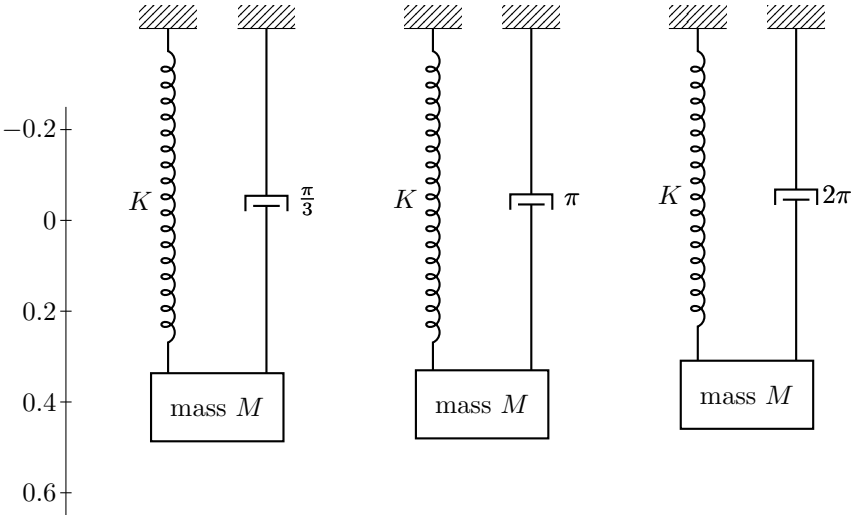
−0.2
0
0.2
0.4
0.6
K
$\frac{\pi}{3}$
mass M
K
π
mass M
K
2π
mass M

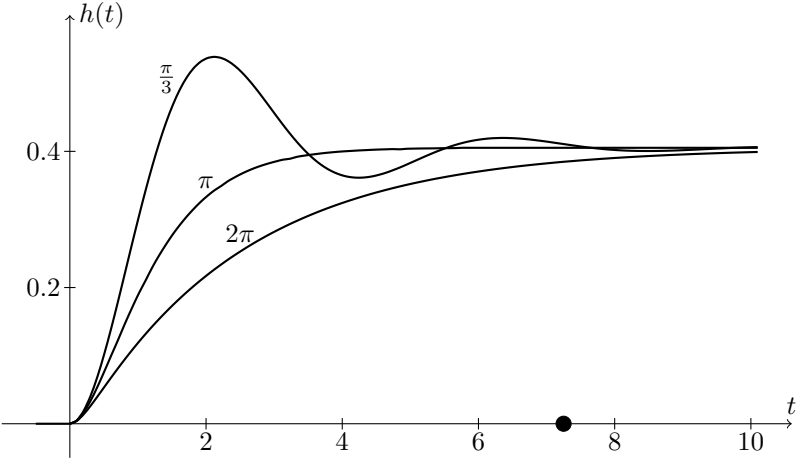
$h(t)$
$\frac{\pi}{3}$
π
2π
0.4
0.2
t
2
4
6
8
10

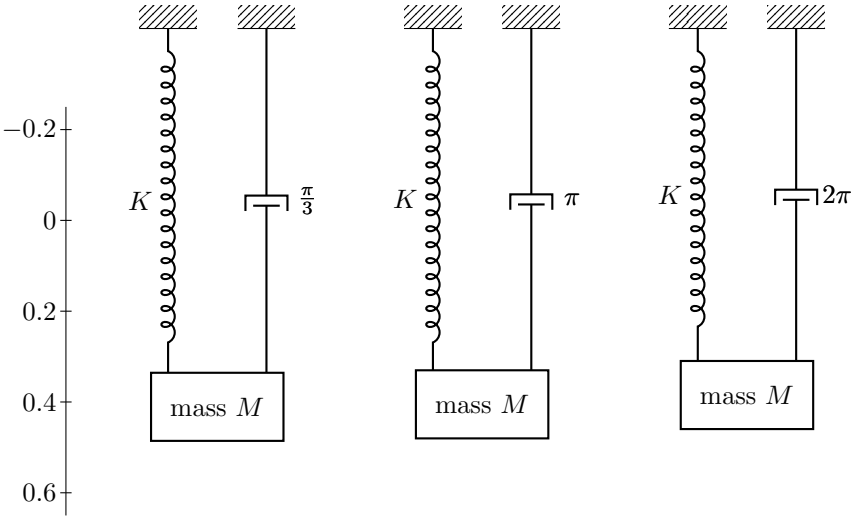
K
$\frac{\pi}{3}$
mass M
K
π
mass M
K
2π
mass M
−0.2
0
0.2
0.4
0.6

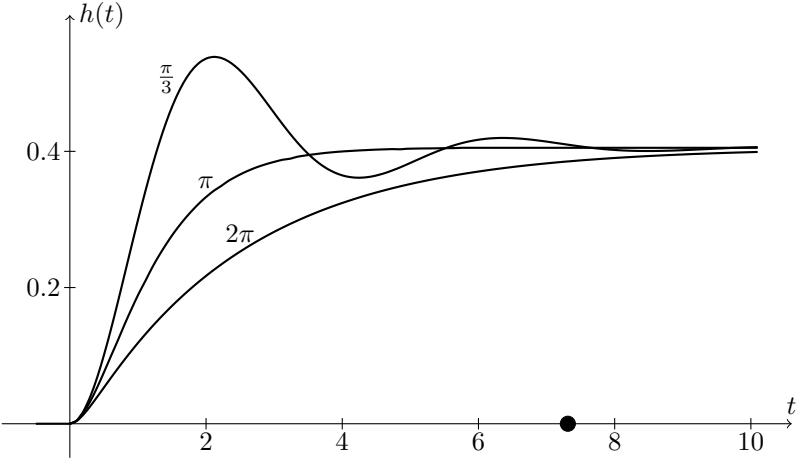
$h(t)$
$\frac{\pi}{3}$
π
2π
0.4
0.2
t
2
4
6
8
10

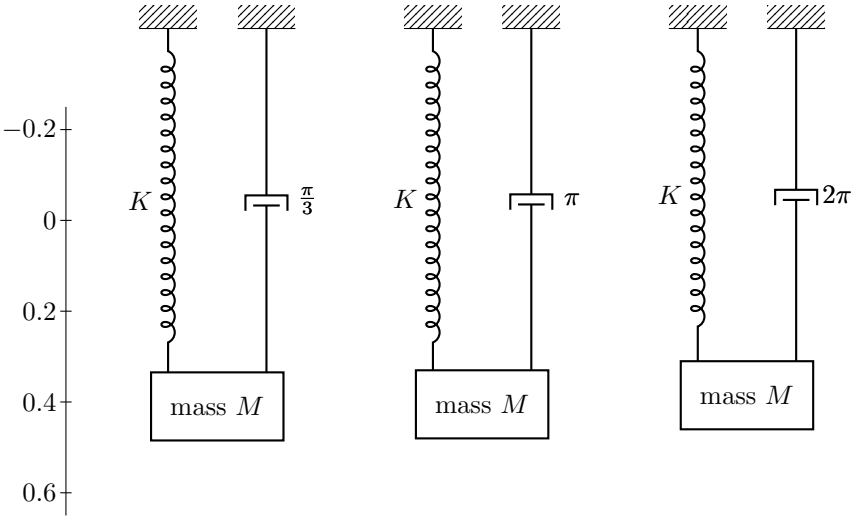
K
$\frac{\pi}{3}$
mass M
K
π
mass M
K
2π
mass M
−0.2
0
0.2
0.4
0.6

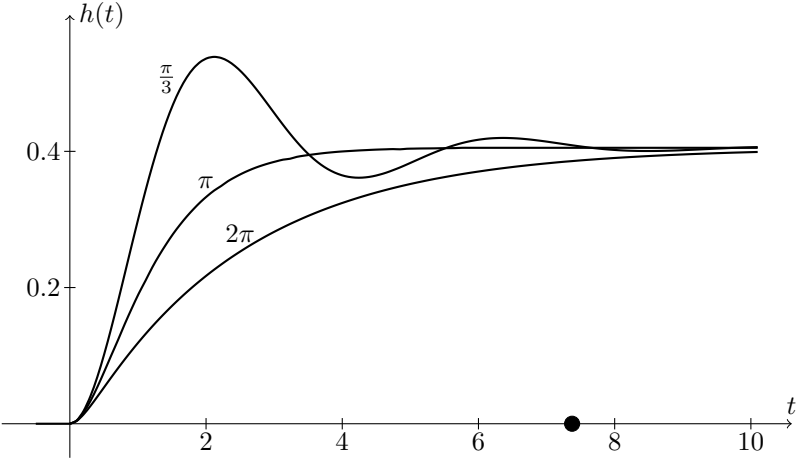
h(t)
π/3
π
2π
0.4
0.2
t
2
4
6
8
10

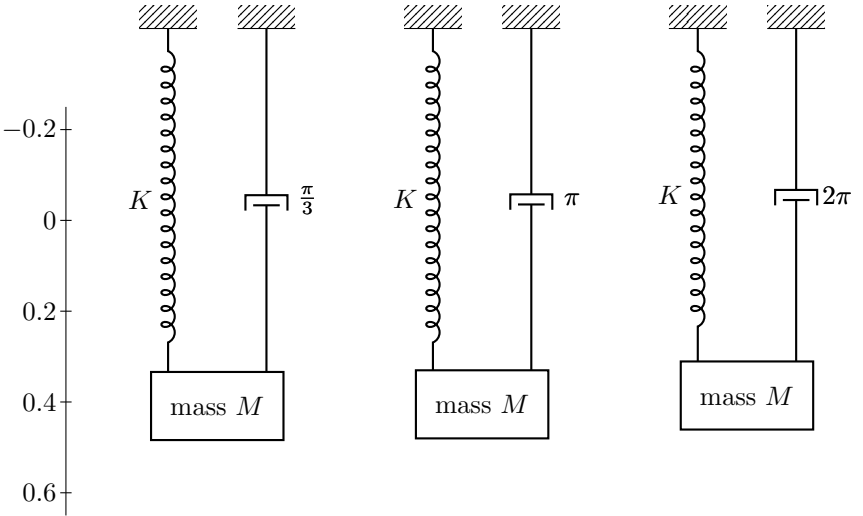
−0.2
0
0.2
0.4
0.6
K
π/3
mass M
K
π
mass M
K
2π
mass M

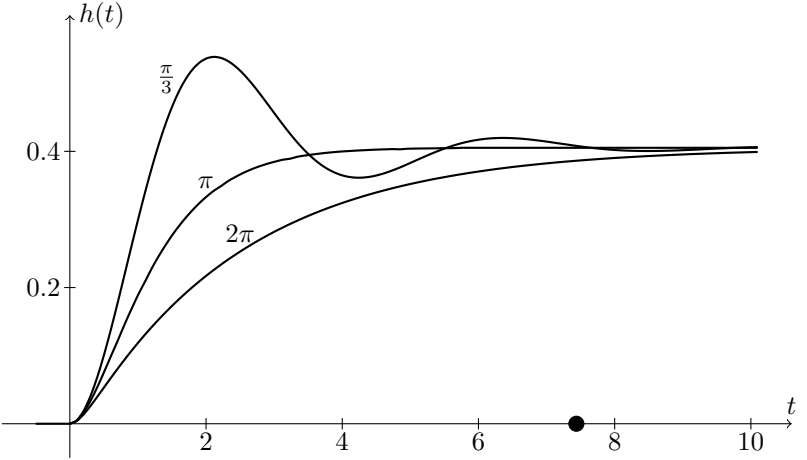
$h(t)$
$\frac{\pi}{3}$
π
2π
0.4
0.2
t
2
4
6
8
10

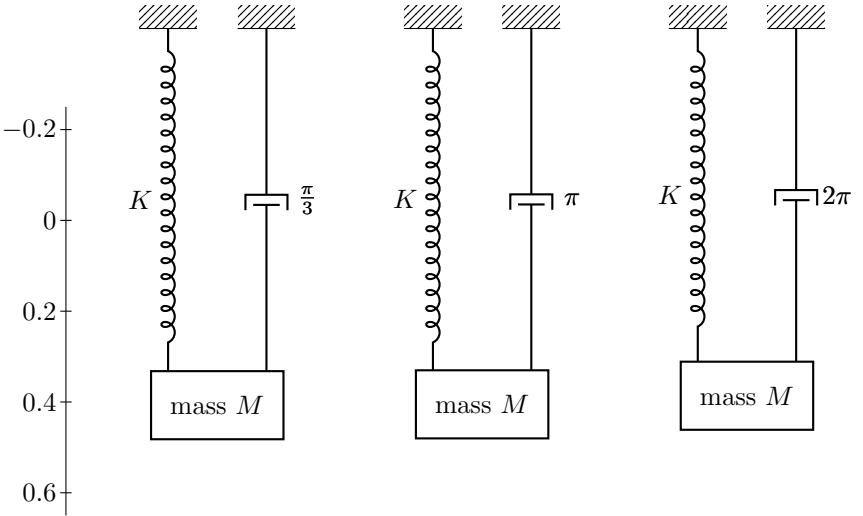
−0.2
0
0.2
0.4
0.6
K
$\frac{\pi}{3}$
mass M
K
π
mass M
K
2π
mass M

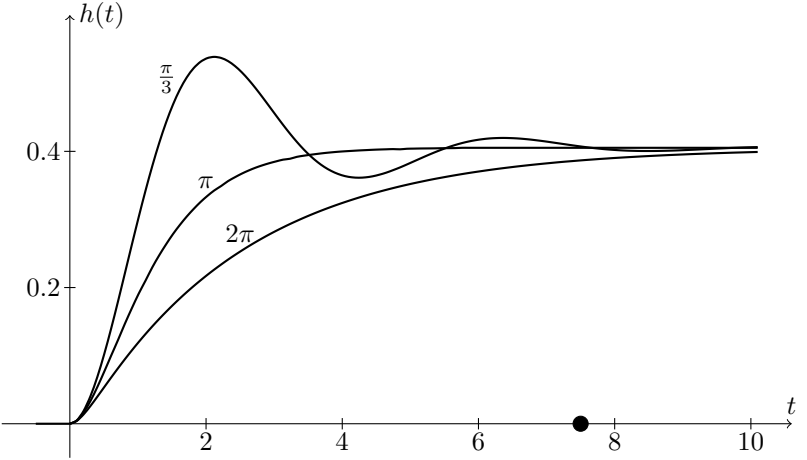
$h(t)$
$\frac{\pi}{3}$
π
2π
0.4
0.2
t
2
4
6
8
10

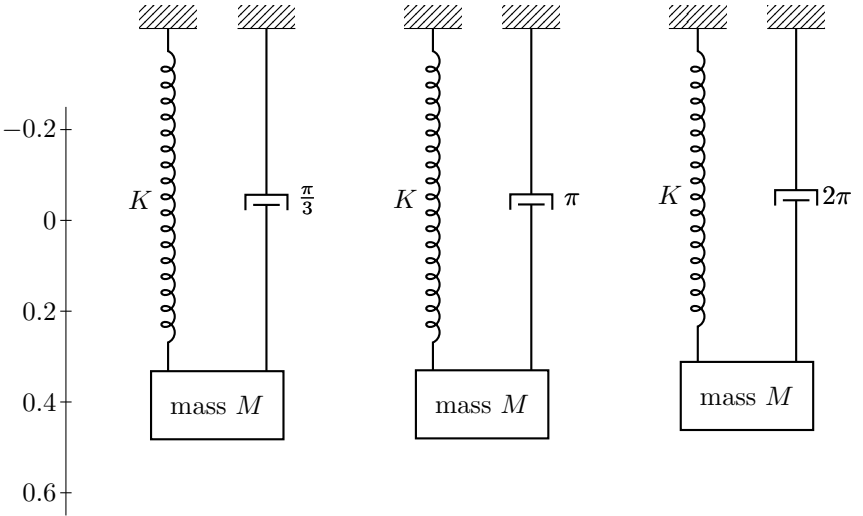
K
$\frac{\pi}{3}$
mass M
K
π
mass M
K
2π
mass M
−0.2
0
0.2
0.4
0.6

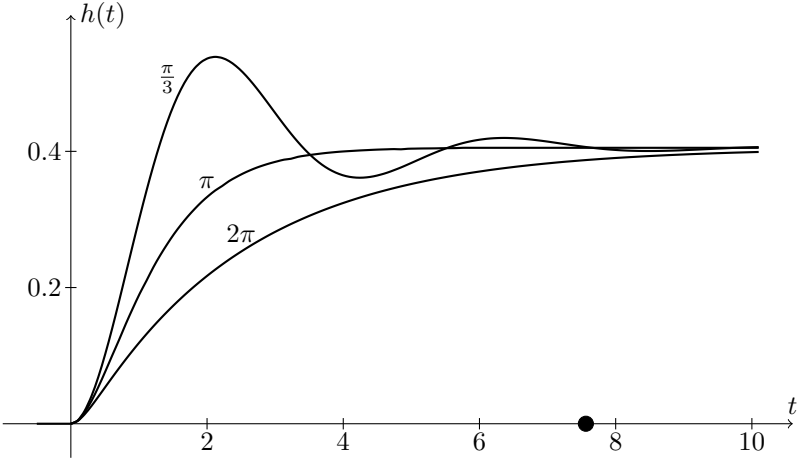
$h(t)$
$\frac{\pi}{3}$
π
2π
0.4
0.2
t
2
4
6
8
10

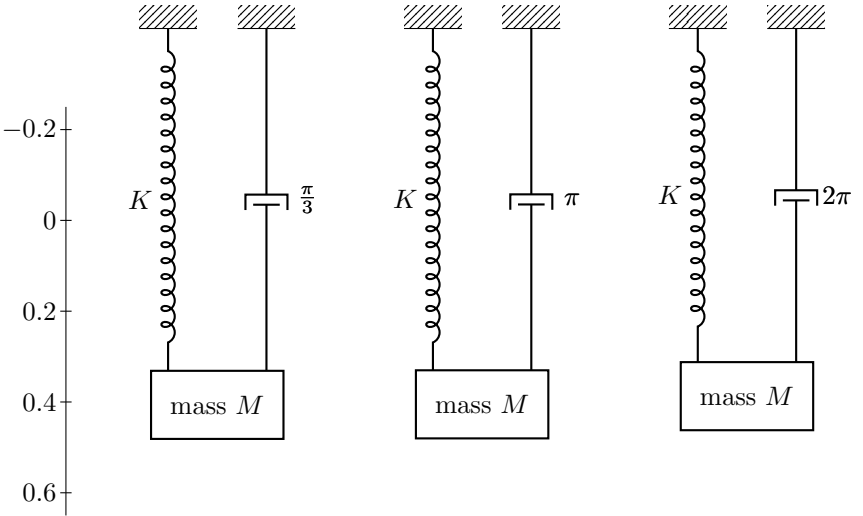
−0.2
0
0.2
0.4
0.6
K
$\frac{\pi}{3}$
mass M
K
π
mass M
K
2π
mass M

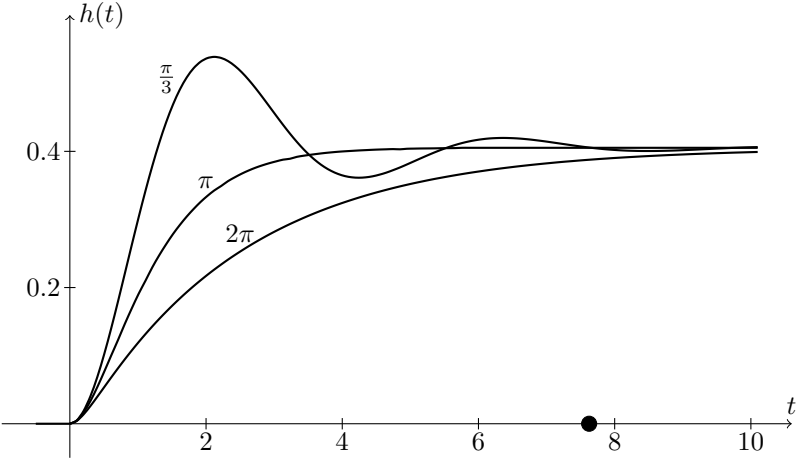
$h(t)$
$\frac{\pi}{3}$
π
2π
0.4
0.2
t
2
4
6
8
10

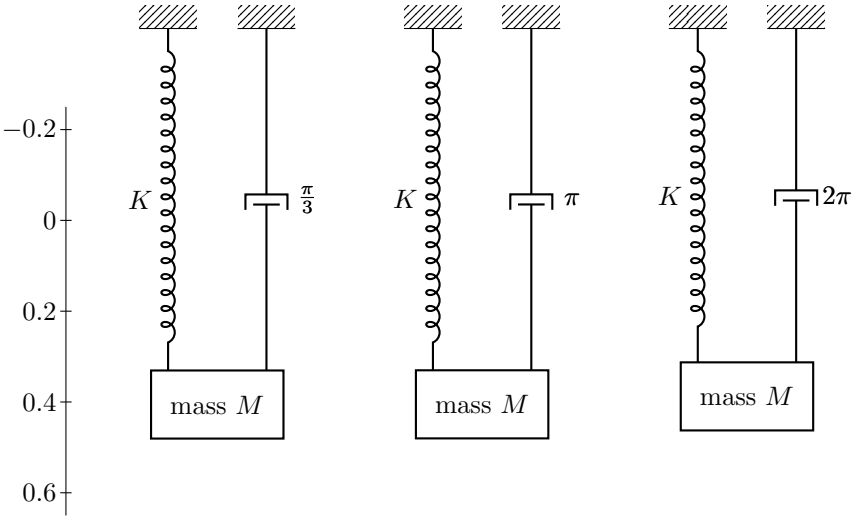
−0.2
0
0.2
0.4
0.6
K
$\frac{\pi}{3}$
mass M
K
π
mass M
K
2π
mass M

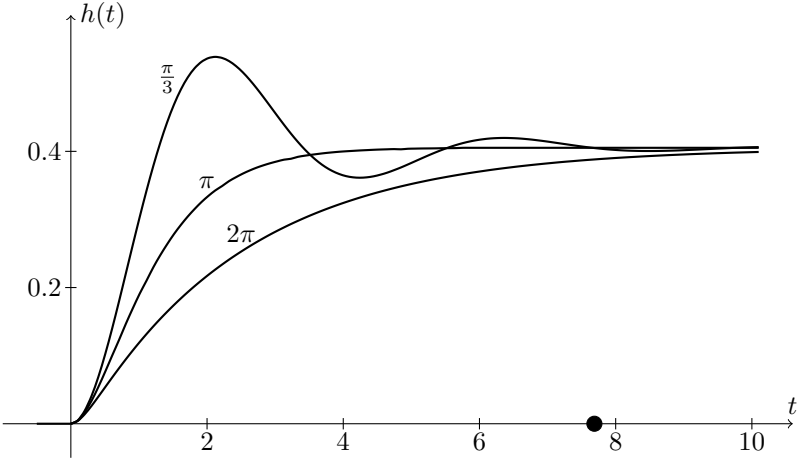
$h(t)$
$\frac{\pi}{3}$
π
2π
0.4
0.2
t
2
4
6
8
10

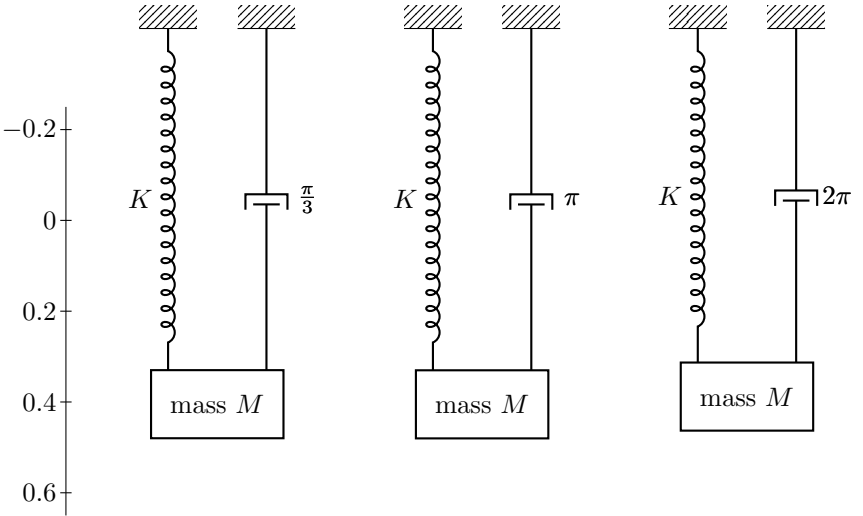
−0.2
0
0.2
0.4
0.6
K
$\frac{\pi}{3}$
mass M
K
π
mass M
K
2π
mass M

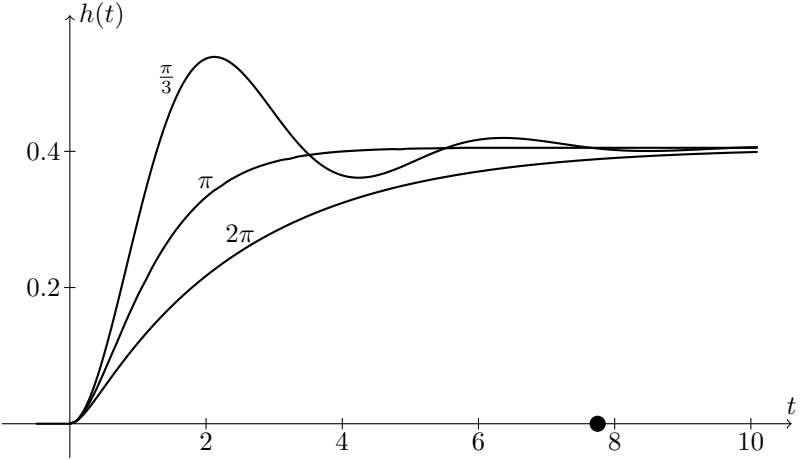
$h(t)$
$\frac{\pi}{3}$
π
2π
0.4
0.2
t
2
4
6
8
10

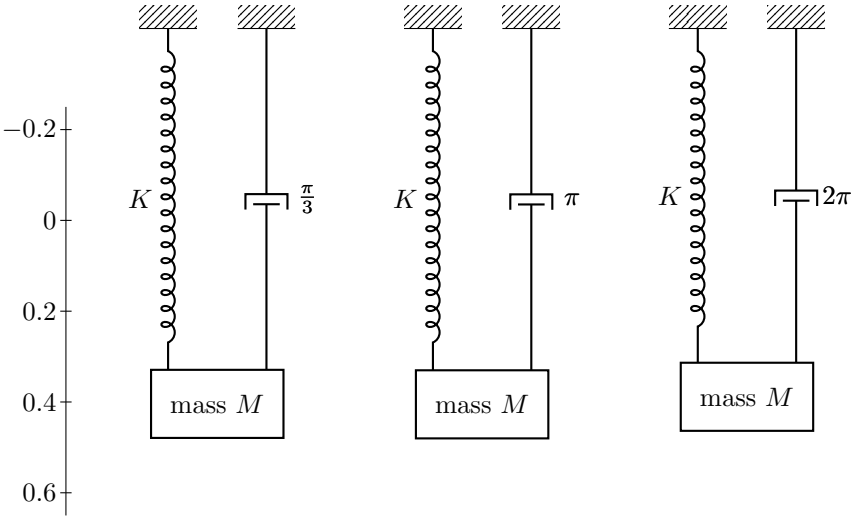
K
$\frac{\pi}{3}$
mass M
K
π
mass M
K
2π
mass M
−0.2
0
0.2
0.4
0.6

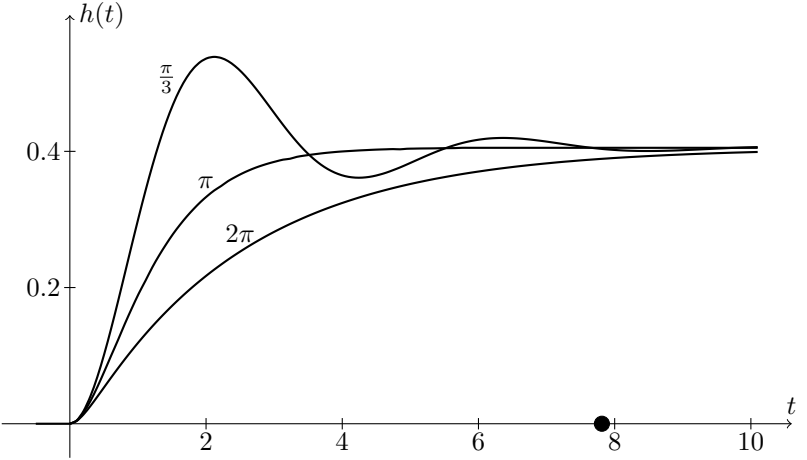
$h(t)$
$\frac{\pi}{3}$
π
2π
0.4
0.2
t
2
4
6
8
10

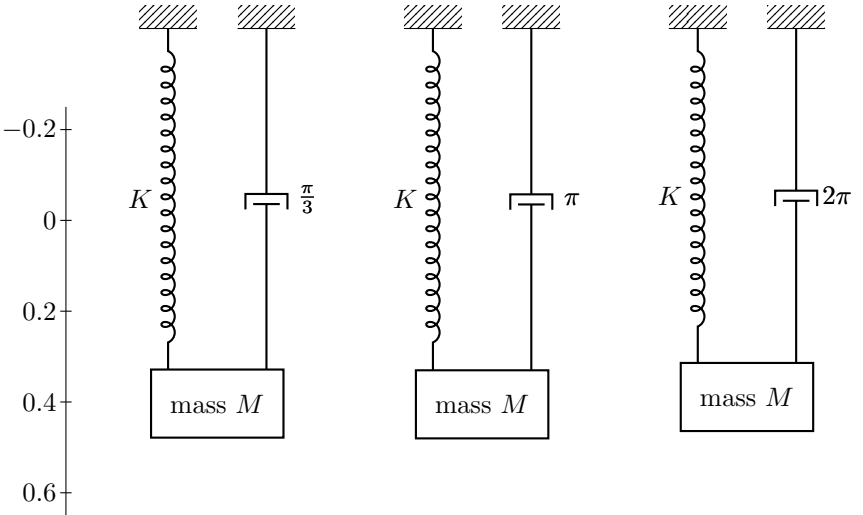
K
$\frac{\pi}{3}$
mass M
K
π
mass M
K
2π
mass M
−0.2
0
0.2
0.4
0.6

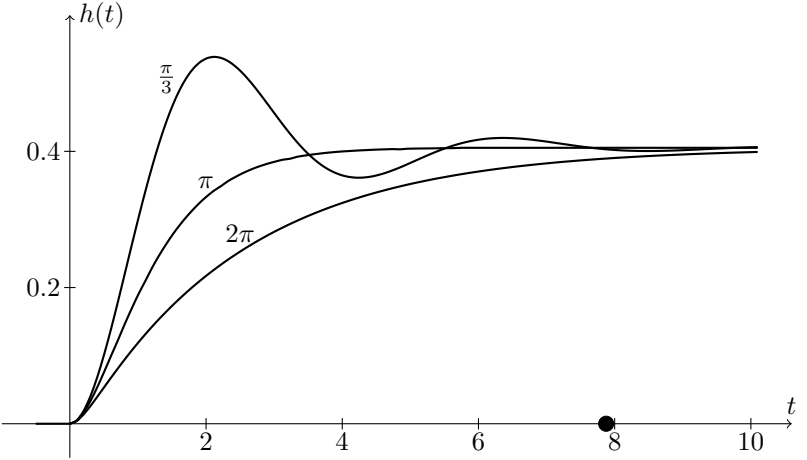
$h(t)$
$\frac{\pi}{3}$
π
2π
0.4
0.2
t
2
4
6
8
10

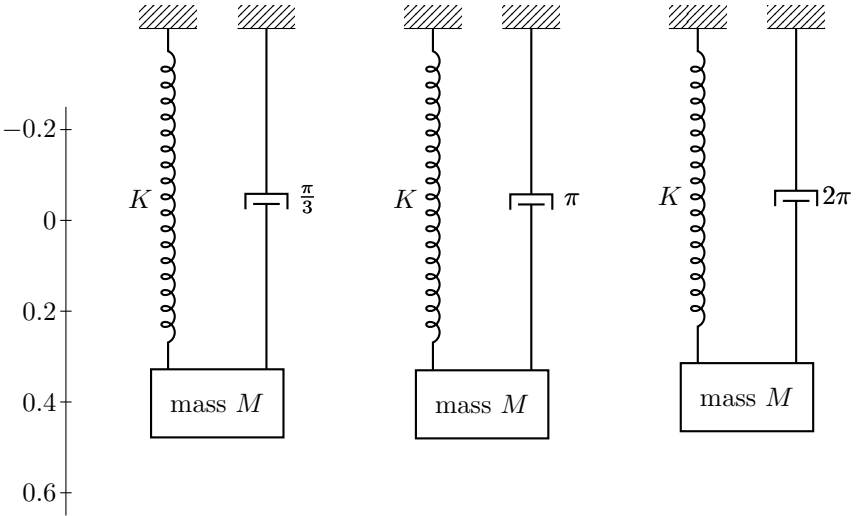
K
$\frac{\pi}{3}$
mass M
K
π
mass M
K
2π
mass M
−0.2
0
0.2
0.4
0.6

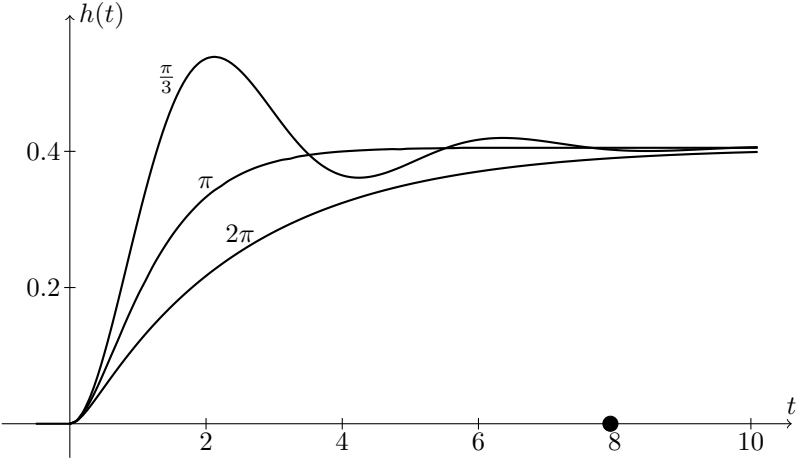
$h(t)$
$\frac{\pi}{3}$
π
2π
0.4
0.2
t
2
4
6
8
10

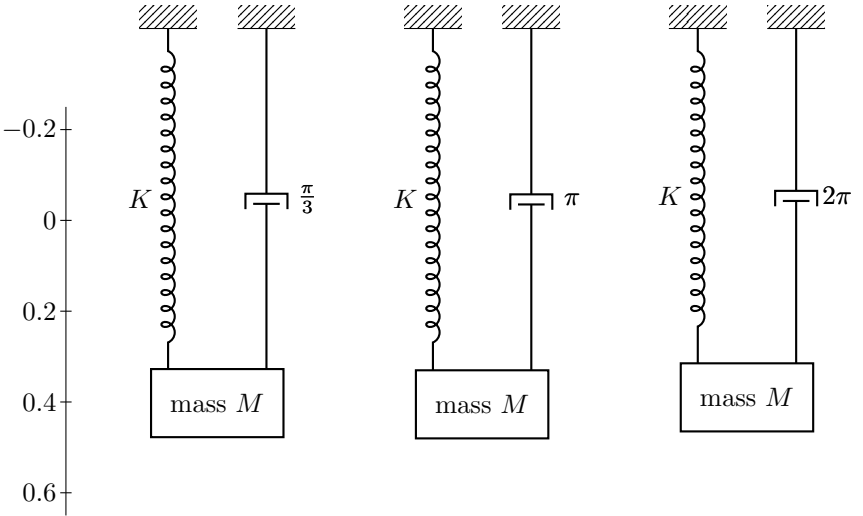
K
$\frac{\pi}{3}$
mass M
K
π
mass M
K
2π
mass M
−0.2
0
0.2
0.4
0.6

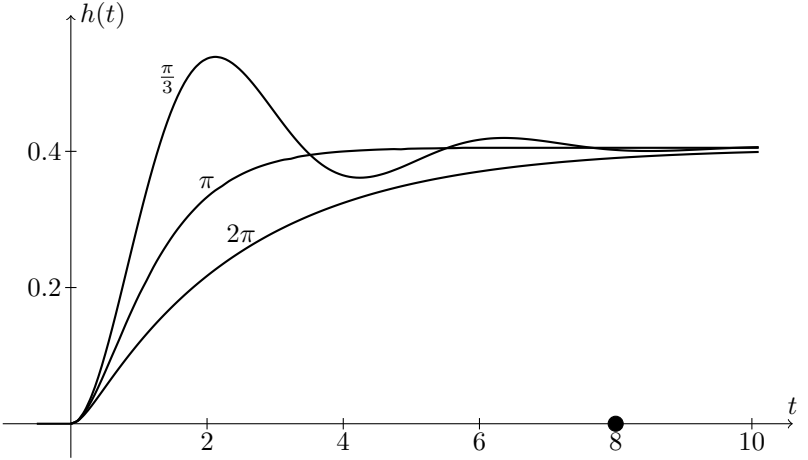
$h(t)$
$\frac{\pi}{3}$
π
2π
0.4
0.2
t
2
4
6
8
10

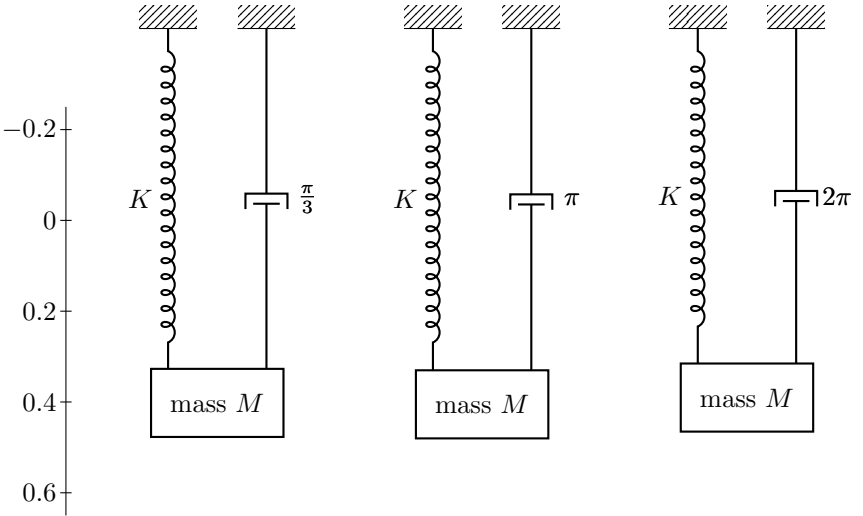
K
$\frac{\pi}{3}$
mass M
K
π
mass M
K
2π
mass M
−0.2
0
0.2
0.4
0.6

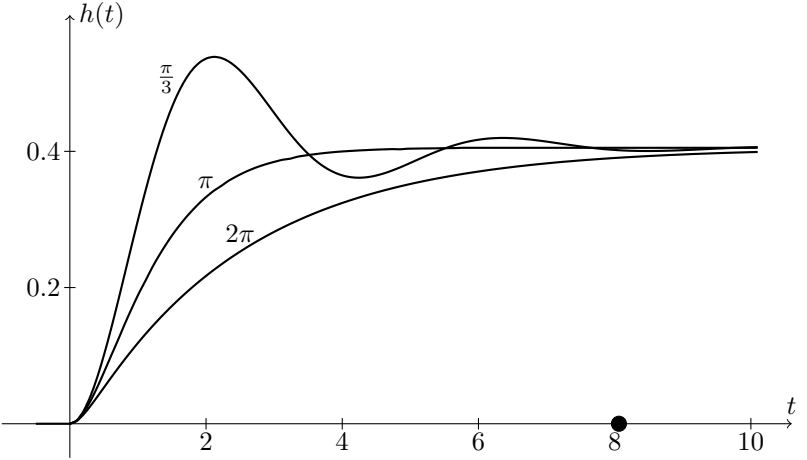
$h(t)$
$\frac{\pi}{3}$
π
2π
0.4
0.2
t
2
4
6
8
10

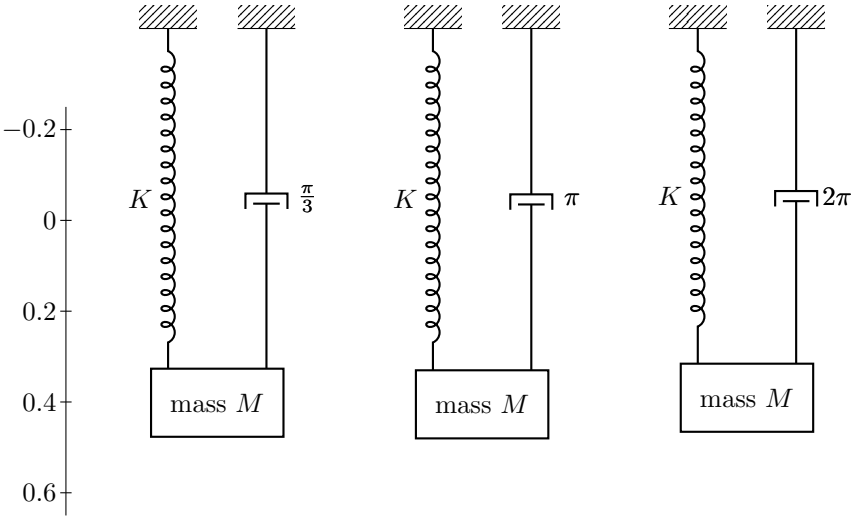
K
$\frac{\pi}{3}$
mass M
K
π
mass M
K
2π
mass M
−0.2
0
0.2
0.4
0.6

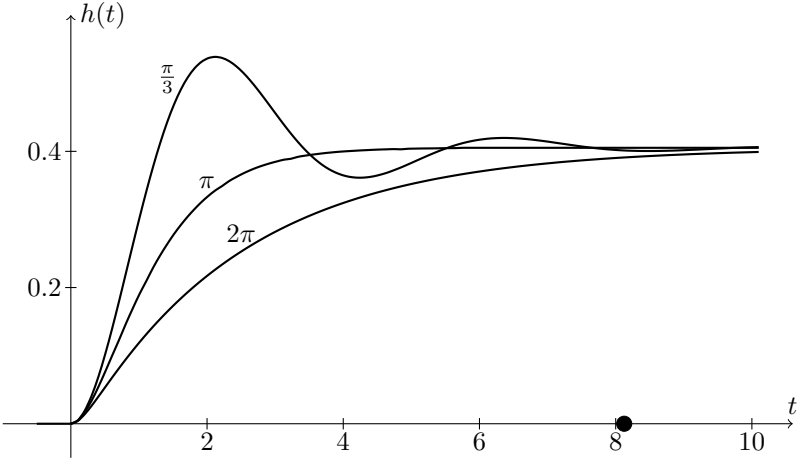
$h(t)$
$\frac{\pi}{3}$
π
2π
0.4
0.2
t
2
4
6
8
10

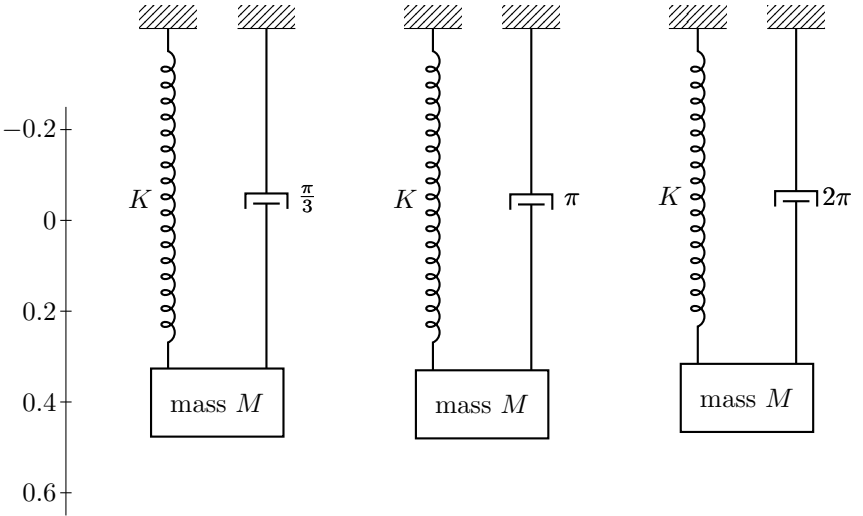
K
$\frac{\pi}{3}$
mass M
K
π
mass M
K
2π
mass M
−0.2
0
0.2
0.4
0.6

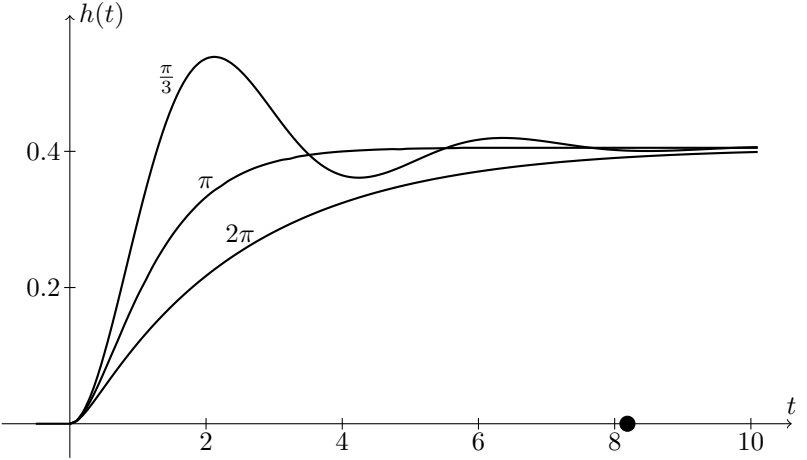
$h(t)$
$\frac{\pi}{3}$
π
2π
0.4
0.2
t
2
4
6
8
10

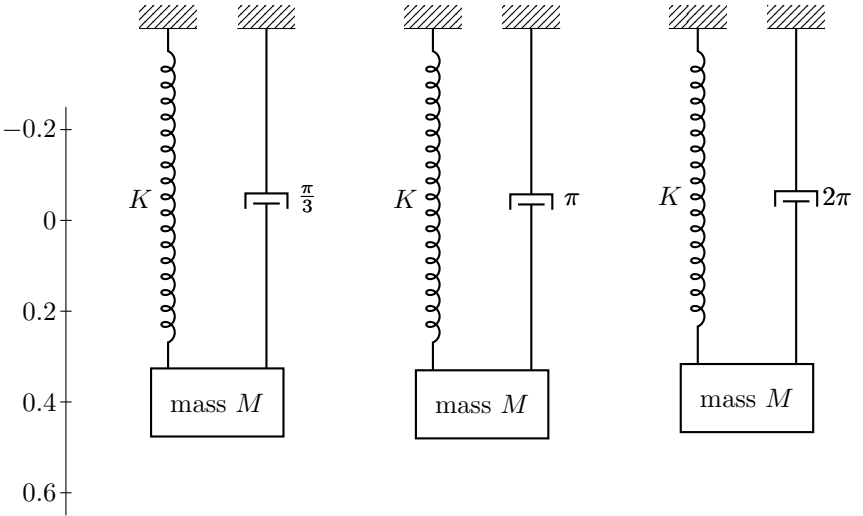
K
$\frac{\pi}{3}$
mass M
K
π
mass M
K
2π
mass M
−0.2
0
0.2
0.4
0.6

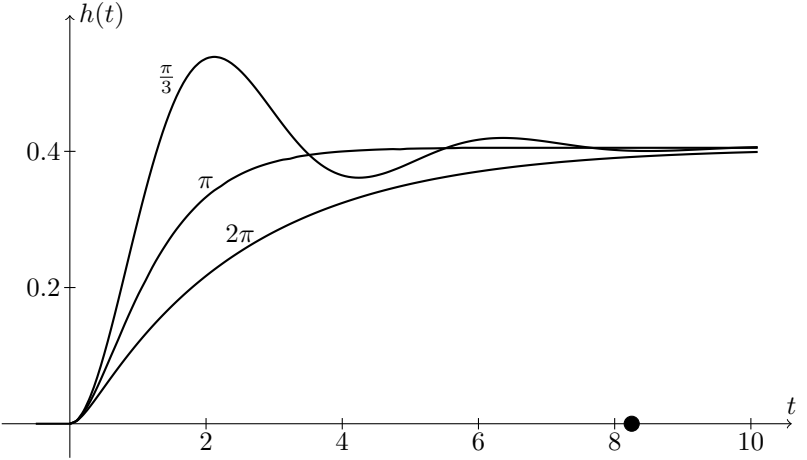
$h(t)$
$\frac{\pi}{3}$
π
2π
0.4
0.2
t
2
4
6
8
10

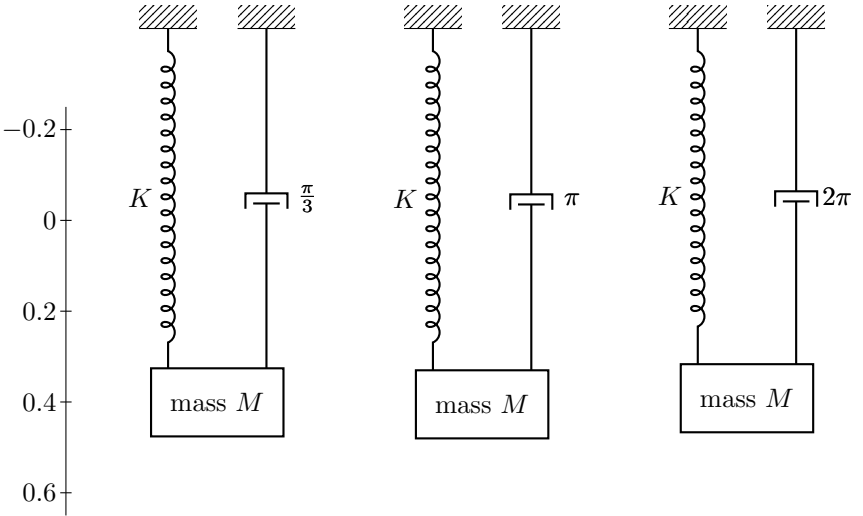
K
$\frac{\pi}{3}$
mass M
K
π
mass M
K
2π
mass M
−0.2
0
0.2
0.4
0.6

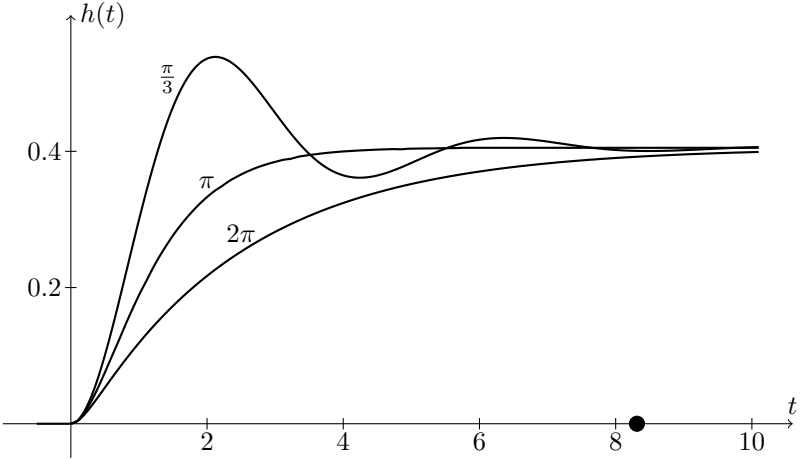
$h(t)$
$\frac{\pi}{3}$
π
2π
0.4
0.2
t
2
4
6
8
10

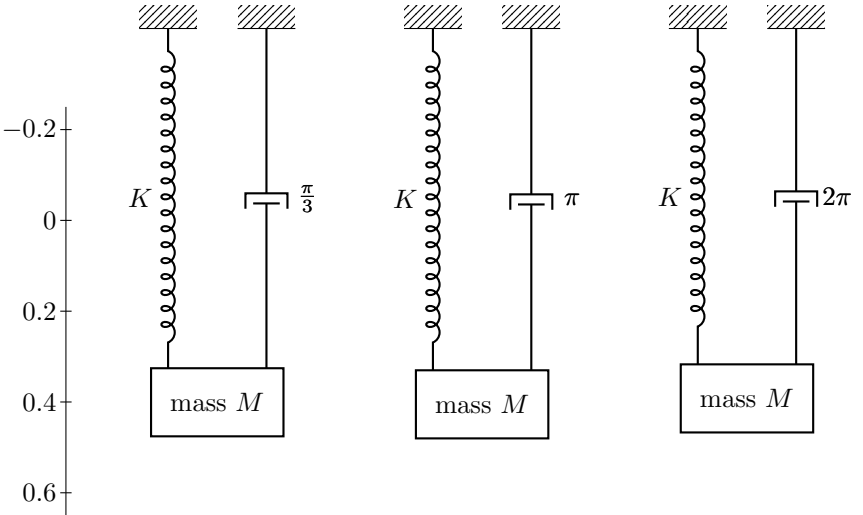
K
$\frac{\pi}{3}$
mass M
K
π
mass M
K
2π
mass M
−0.2
0
0.2
0.4
0.6

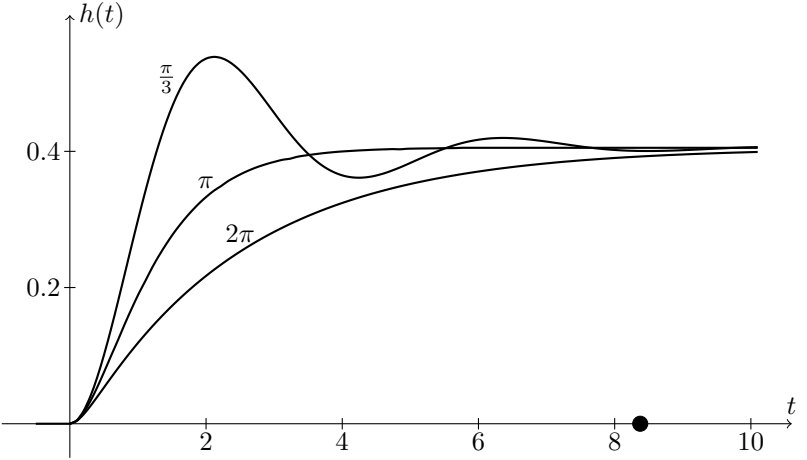
$h(t)$
$\frac{\pi}{3}$
π
2π
0.4
0.2
t
2
4
6
8
10

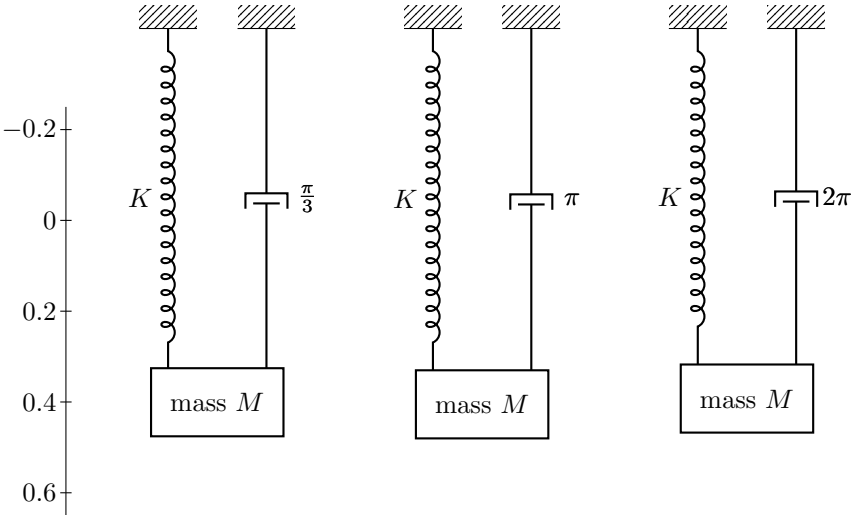
K
$\frac{\pi}{3}$
mass M
K
π
mass M
K
2π
mass M
−0.2
0
0.2
0.4
0.6

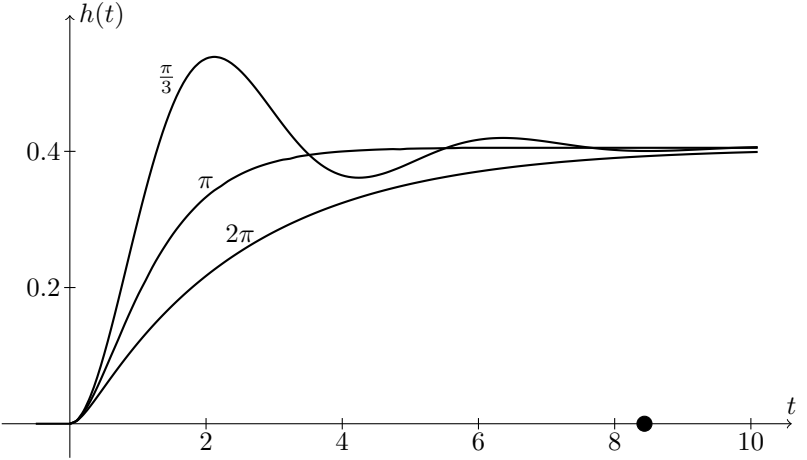
$h(t)$
$\frac{\pi}{3}$
π
2π
0.4
0.2
t
2
4
6
8
10

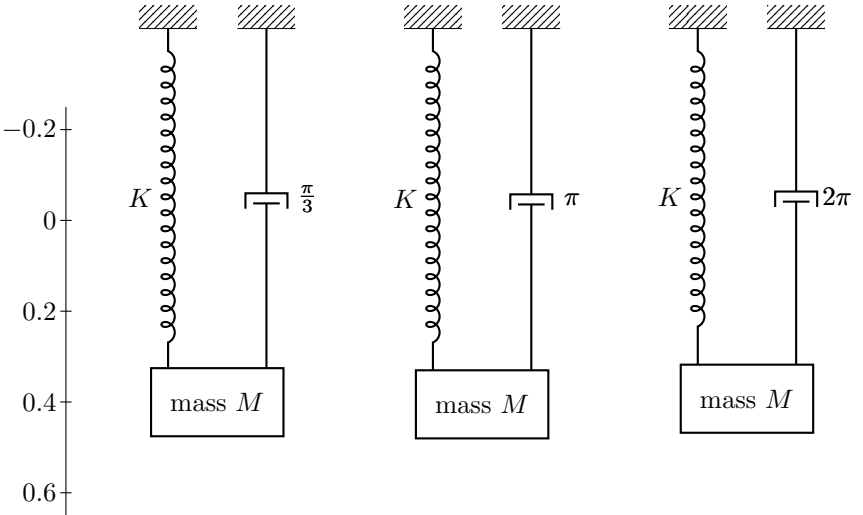
-0.2
0
0.2
0.4
0.6
K
$\frac{\pi}{3}$
mass M
K
π
mass M
K
2π
mass M

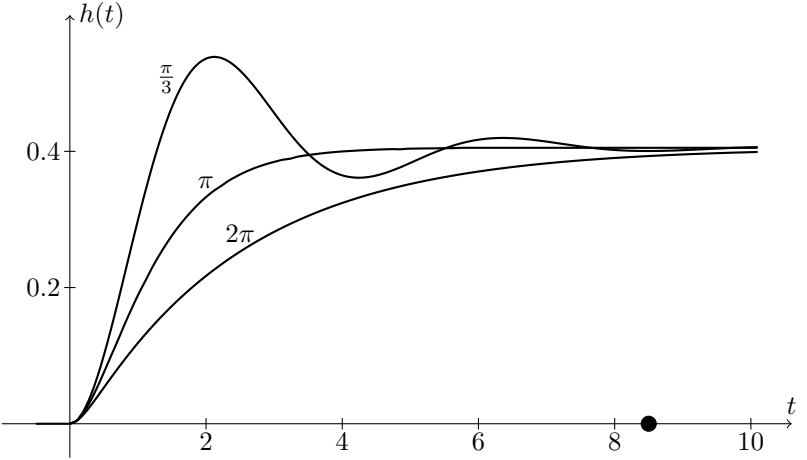
$h(t)$
$\frac{\pi}{3}$
π
2π
0.4
0.2
t
2
4
6
8
10

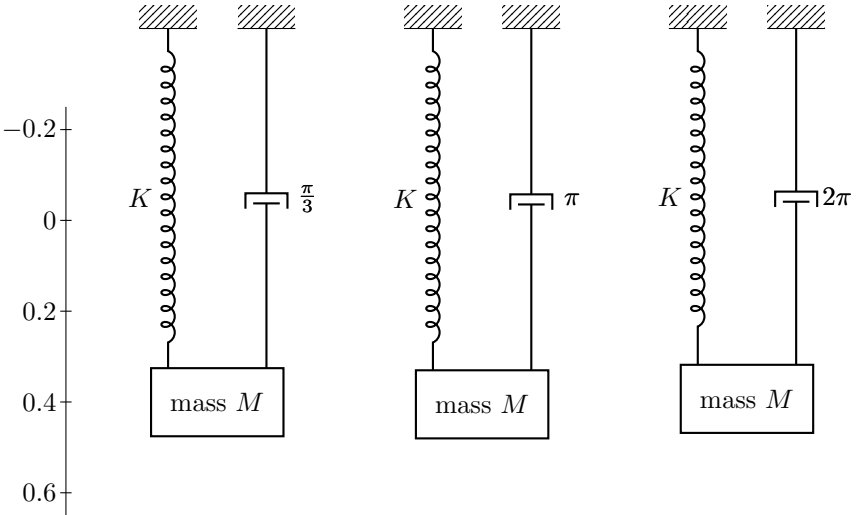
K
$\frac{\pi}{3}$
mass M
K
π
mass M
K
2π
mass M
−0.2
0
0.2
0.4
0.6

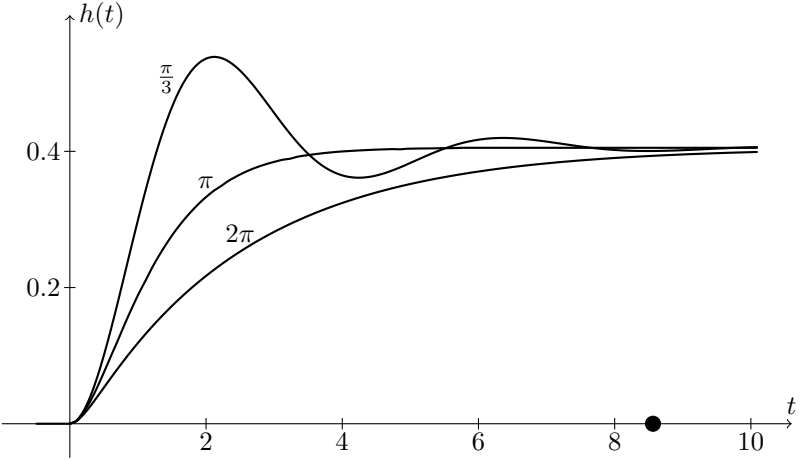
$h(t)$
$\frac{\pi}{3}$
π
2π
0.4
0.2
t
2
4
6
8
10

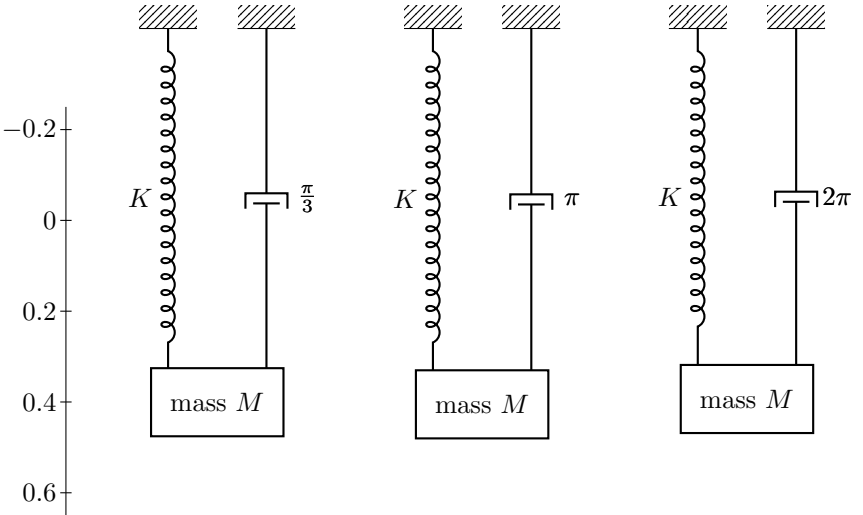
K
$\frac{\pi}{3}$
mass M
K
π
mass M
K
2π
mass M
−0.2
0
0.2
0.4
0.6

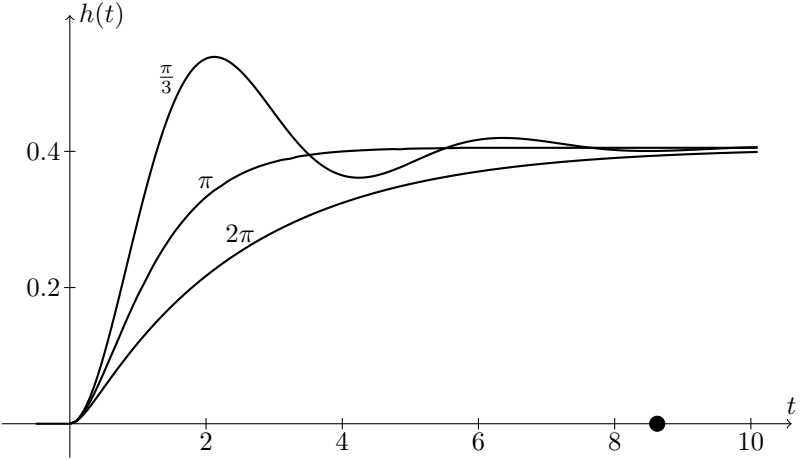
$h(t)$
$\frac{\pi}{3}$
π
2π
0.4
0.2
t
2
4
6
8
10

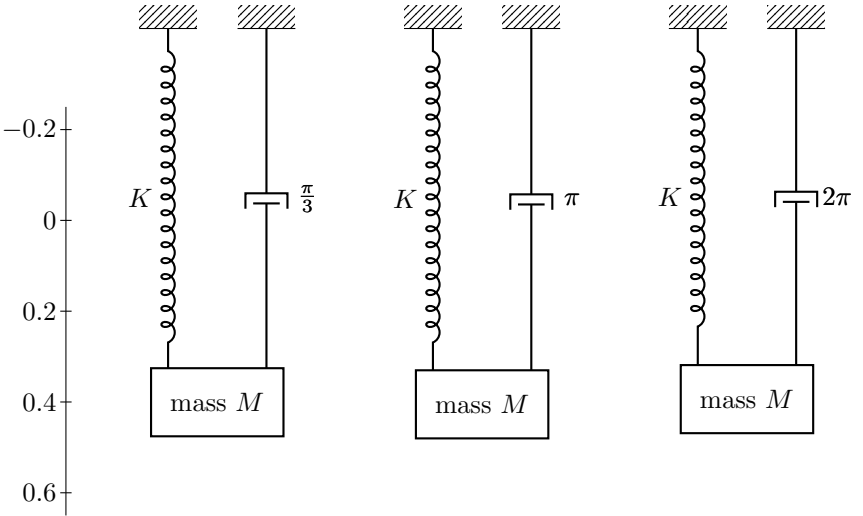
-0.2
0
0.2
0.4
0.6
K
$\frac{\pi}{3}$
mass M
K
π
mass M
K
2π
mass M

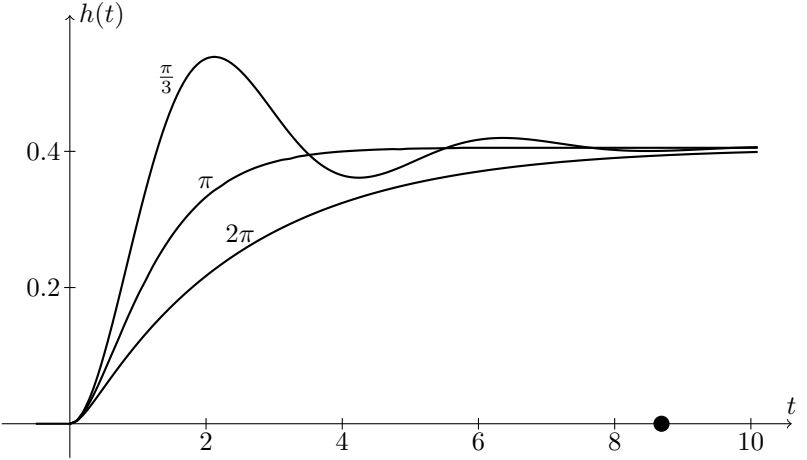
$h(t)$
$\frac{\pi}{3}$
π
2π
0.4
0.2
t
2
4
6
8
10

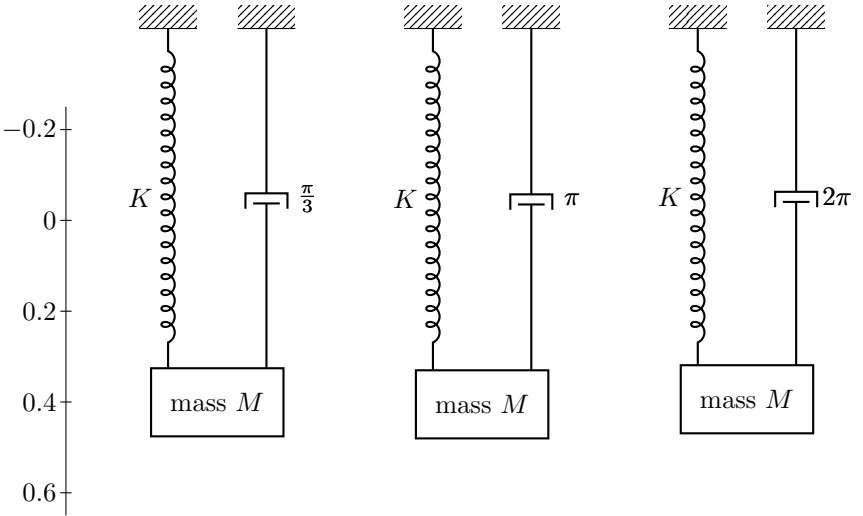
−0.2
0
0.2
0.4
0.6
K
$\frac{\pi}{3}$
mass M
K
π
mass M
K
2π
mass M

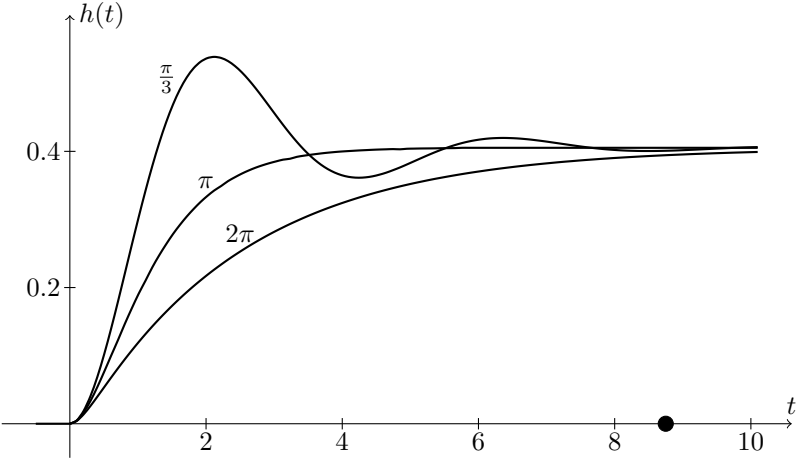
$h(t)$
$\frac{\pi}{3}$
π
2π
0.4
0.2
t
2
4
6
8
10

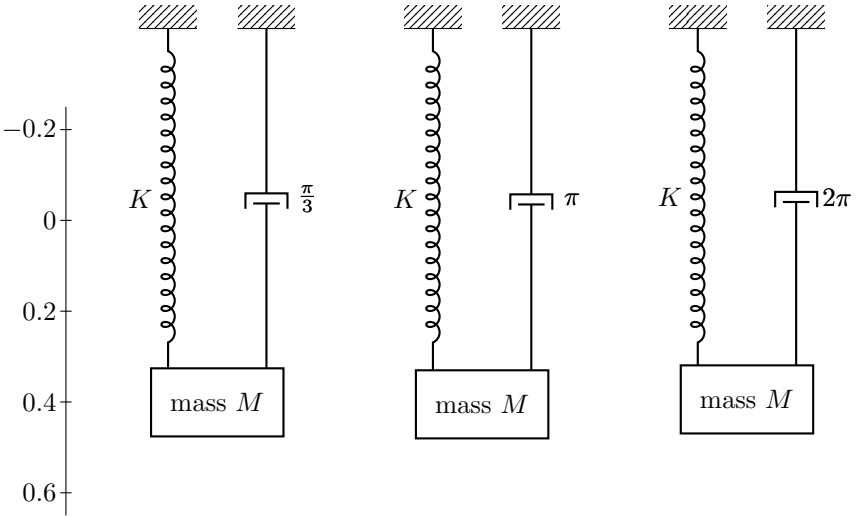
K
$\frac{\pi}{3}$
mass M
K
π
mass M
K
2π
mass M
−0.2
0
0.2
0.4
0.6

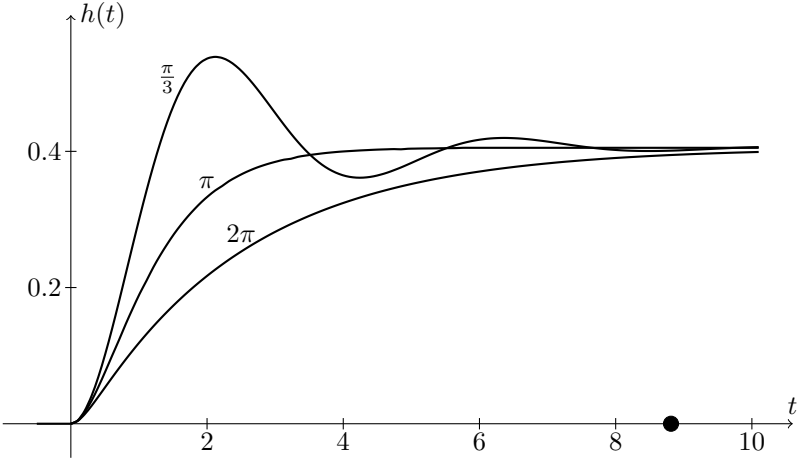
$h(t)$
$\frac{\pi}{3}$
π
2π
0.4
0.2
t
2
4
6
8
10

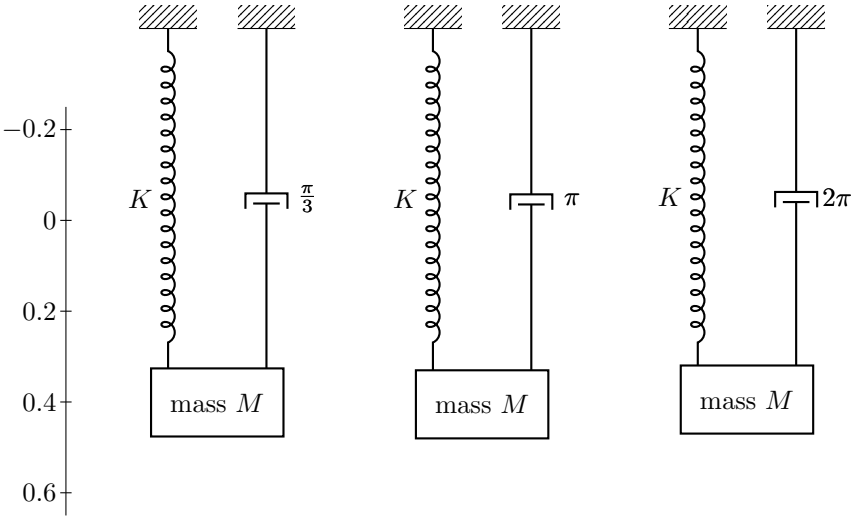
K
$\frac{\pi}{3}$
mass M
K
π
mass M
K
2π
mass M
−0.2
0
0.2
0.4
0.6

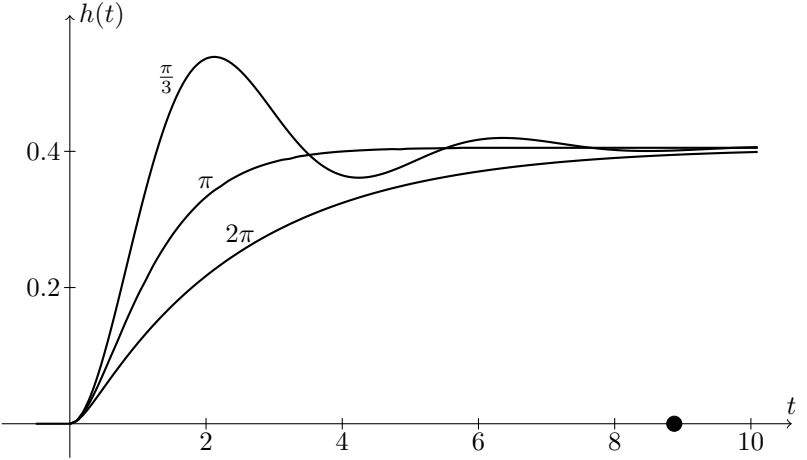
$h(t)$
$\frac{\pi}{3}$
π
2π
0.4
0.2
t
2
4
6
8
10

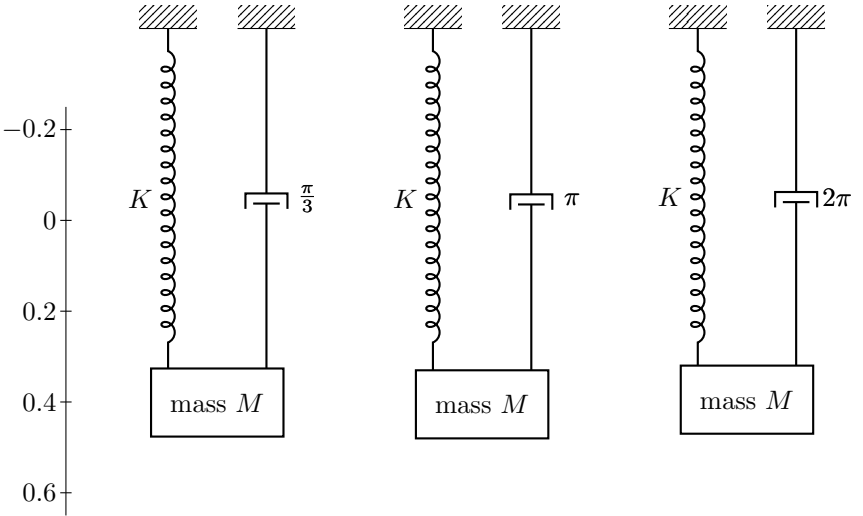
-0.2
0
0.2
0.4
0.6
K
$\frac{\pi}{3}$
mass M
K
π
mass M
K
2π
mass M

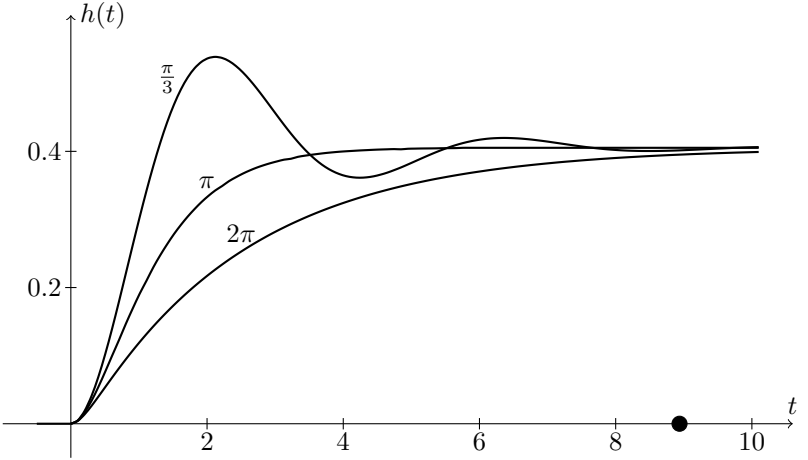
$h(t)$
$\frac{\pi}{3}$
π
2π
0.4
0.2
t
2
4
6
8
10

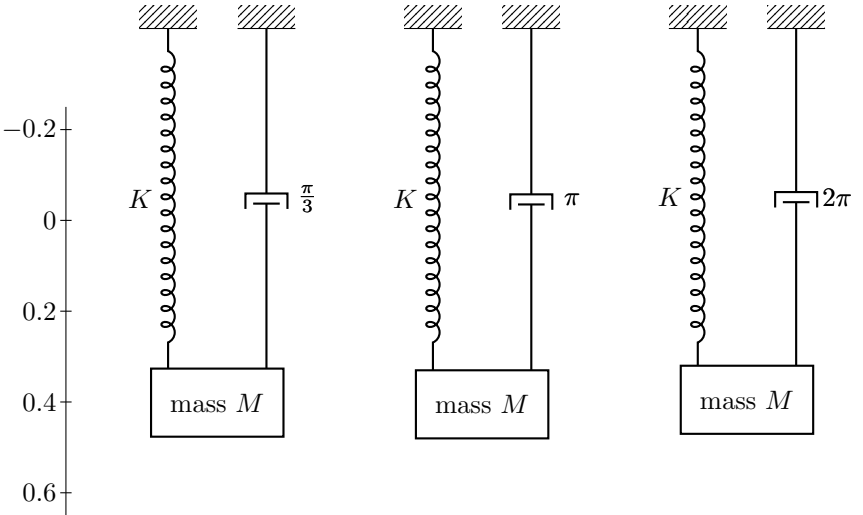
−0.2
0
0.2
0.4
0.6
K
$\frac{\pi}{3}$
mass M
K
π
mass M
K
2π
mass M

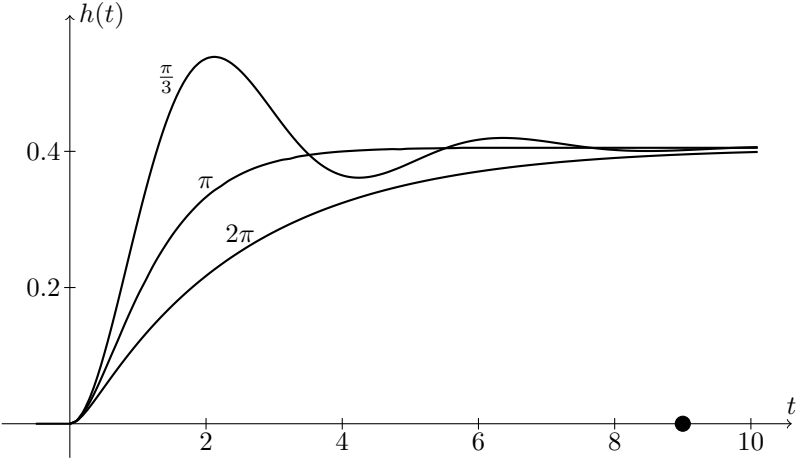
$h(t)$
$\frac{\pi}{3}$
π
2π
0.4
0.2
t
2
4
6
8
10

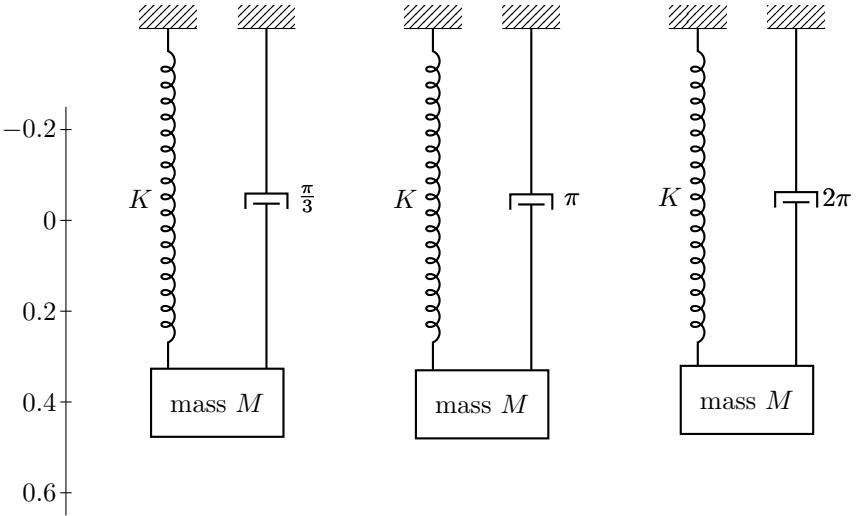
-0.2
0
0.2
0.4
0.6
K
$\frac{\pi}{3}$
mass M
K
π
mass M
K
2π
mass M

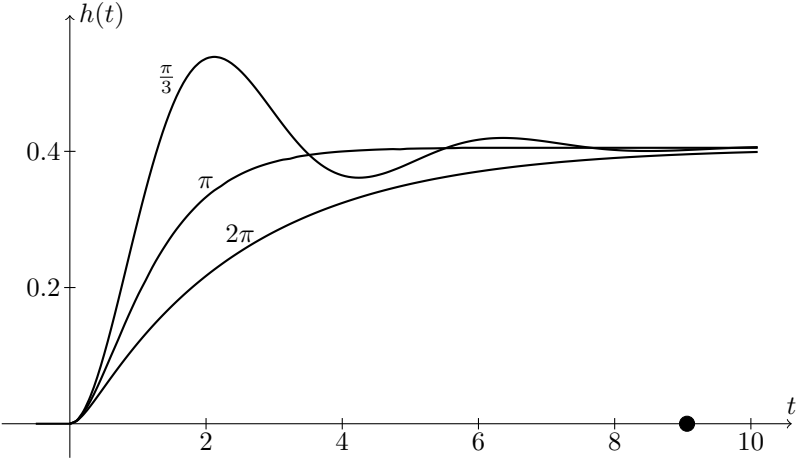
$h(t)$
$\frac{\pi}{3}$
π
2π
0.4
0.2
t
2
4
6
8
10

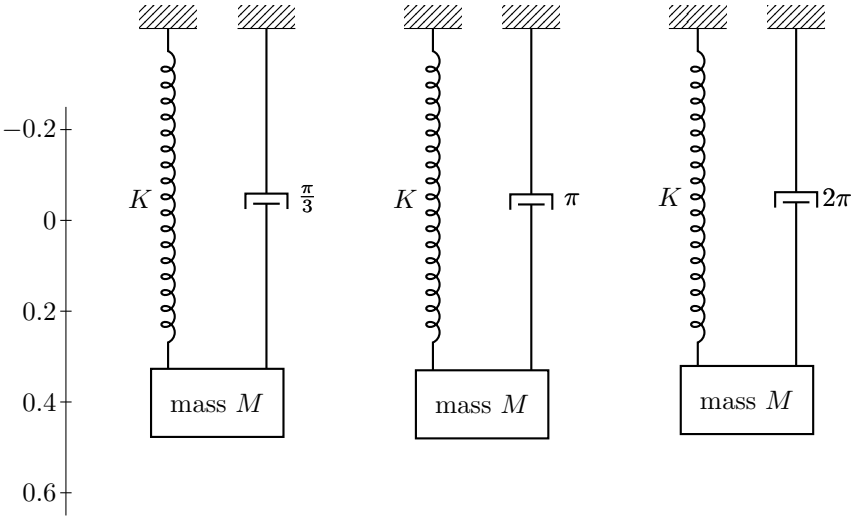
-0.2
0
0.2
0.4
0.6
K
$\frac{\pi}{3}$
mass M
K
π
mass M
K
2π
mass M

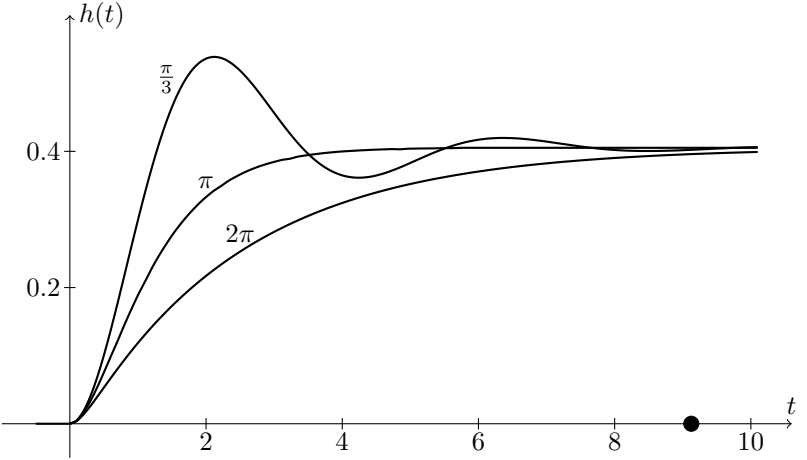
$h(t)$
$\frac{\pi}{3}$
π
2π
0.4
0.2
t
2
4
6
8
10

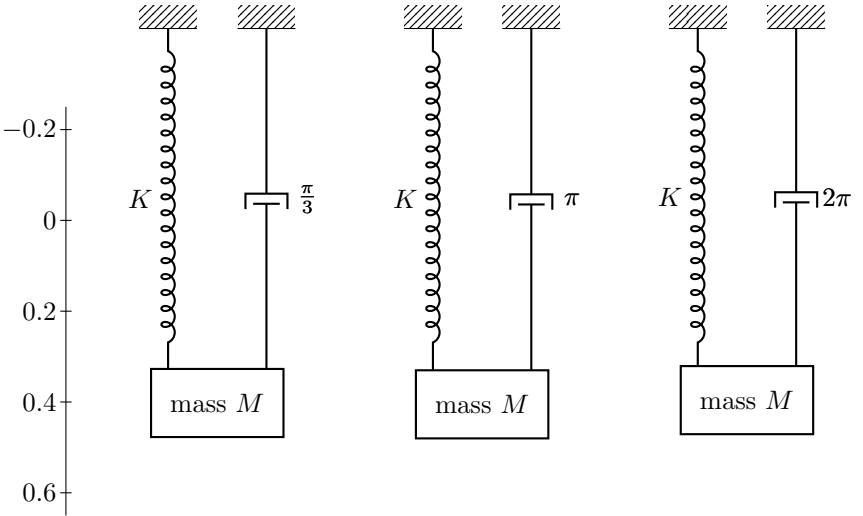
K
$\frac{\pi}{3}$
mass M
K
π
mass M
K
2π
mass M
−0.2
0
0.2
0.4
0.6

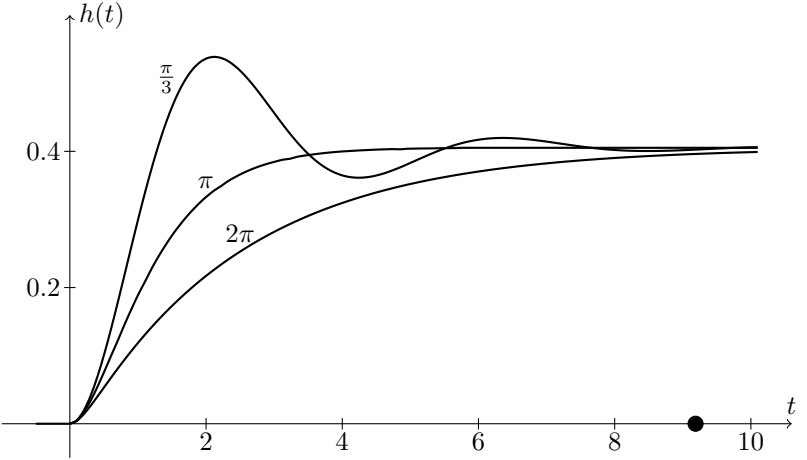
$h(t)$
$\frac{\pi}{3}$
π
2π
0.4
0.2
t
2
4
6
8
10

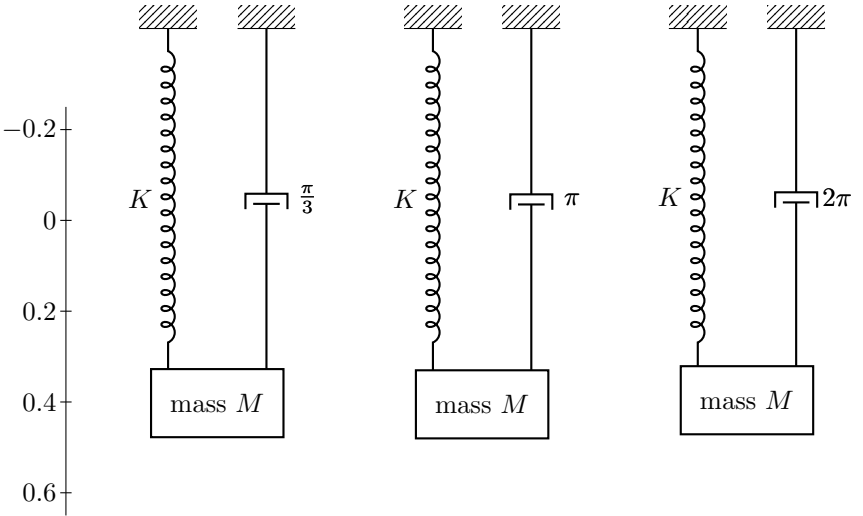
-0.2
0
0.2
0.4
0.6
K
$\frac{\pi}{3}$
mass M
K
π
mass M
K
2π
mass M

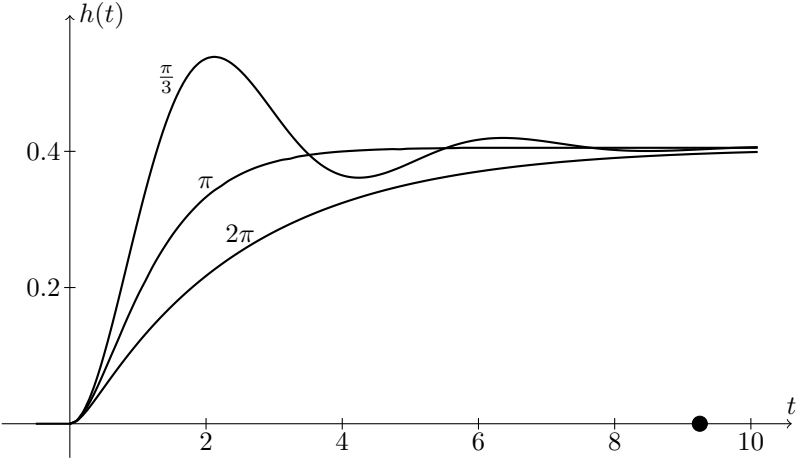
$h(t)$
$\frac{\pi}{3}$
π
2π
0.4
0.2
t
2
4
6
8
10

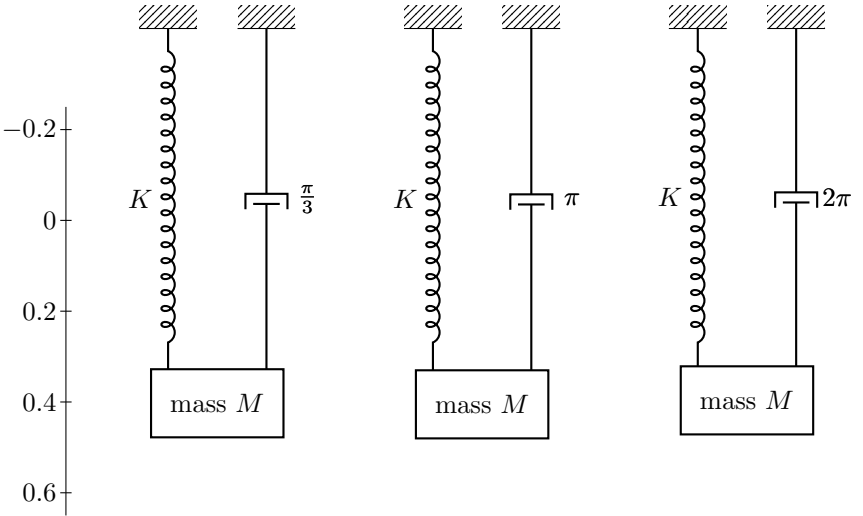
−0.2
0
0.2
0.4
0.6
K
$\frac{\pi}{3}$
mass M
K
π
mass M
K
2π
mass M

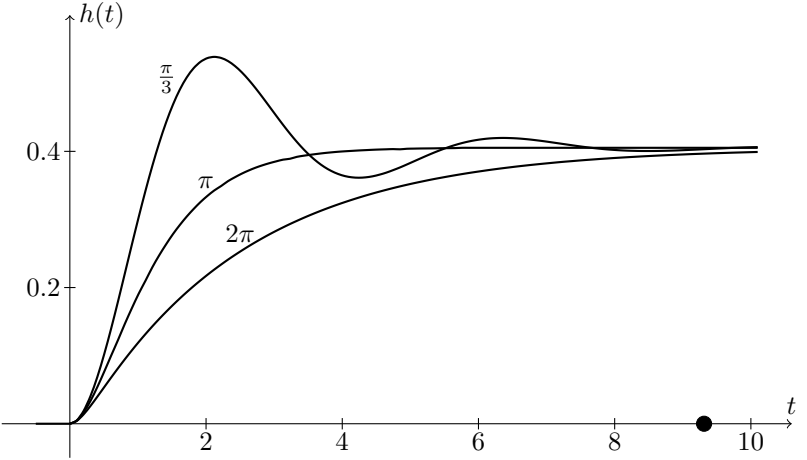
$h(t)$
$\frac{\pi}{3}$
π
2π
0.4
0.2
t
2
4
6
8
10

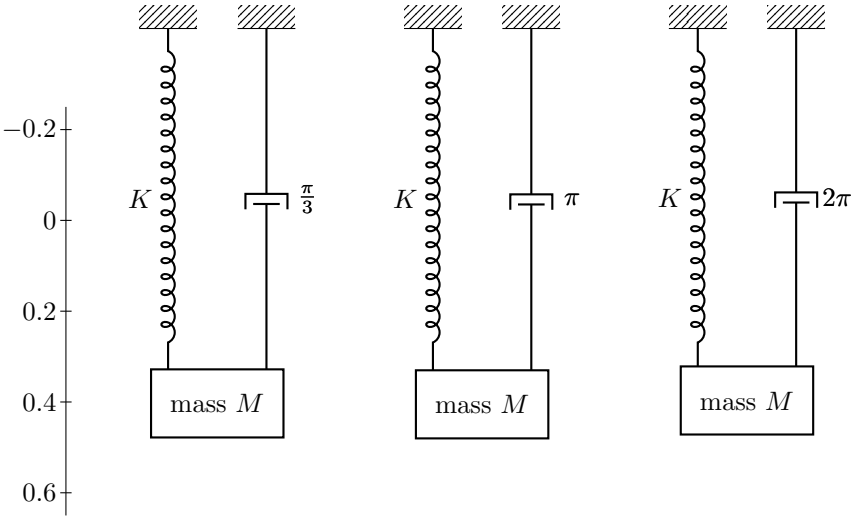
K
$\frac{\pi}{3}$
mass M
K
π
mass M
K
2π
mass M
−0.2
0
0.2
0.4
0.6

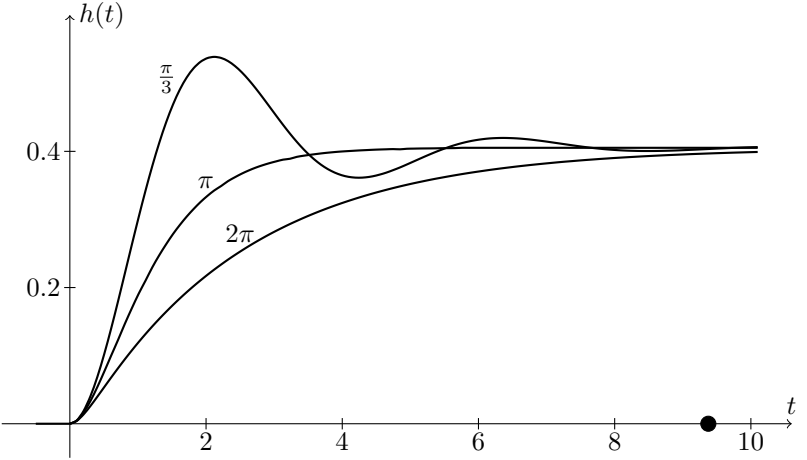
$h(t)$
$\frac{\pi}{3}$
π
2π
0.4
0.2
t
2
4
6
8
10

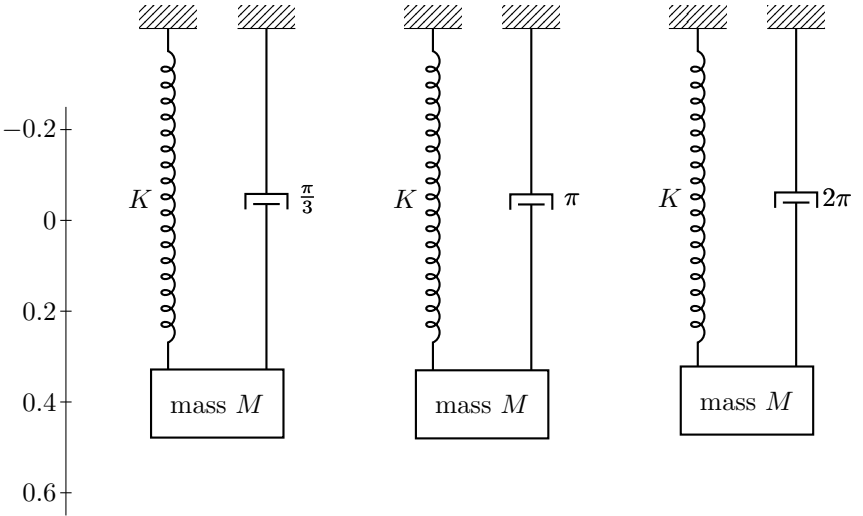
K
$\frac{\pi}{3}$
mass M
K
π
mass M
K
2π
mass M
−0.2
0
0.2
0.4
0.6

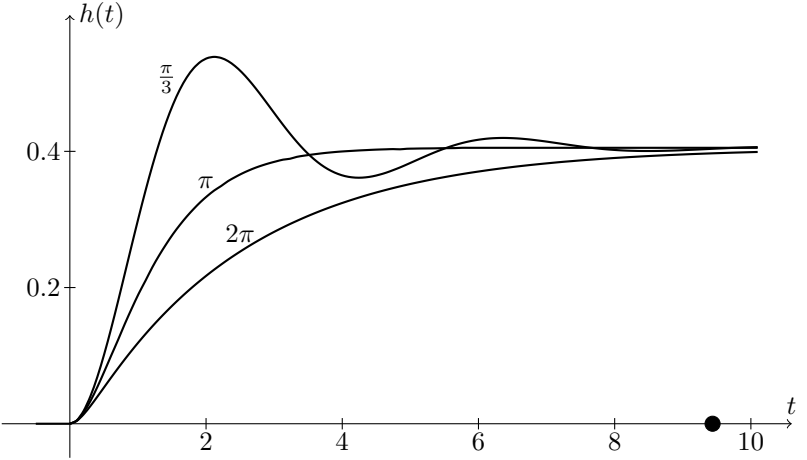
$h(t)$
$\frac{\pi}{3}$
π
2π
0.4
0.2
t
2
4
6
8
10

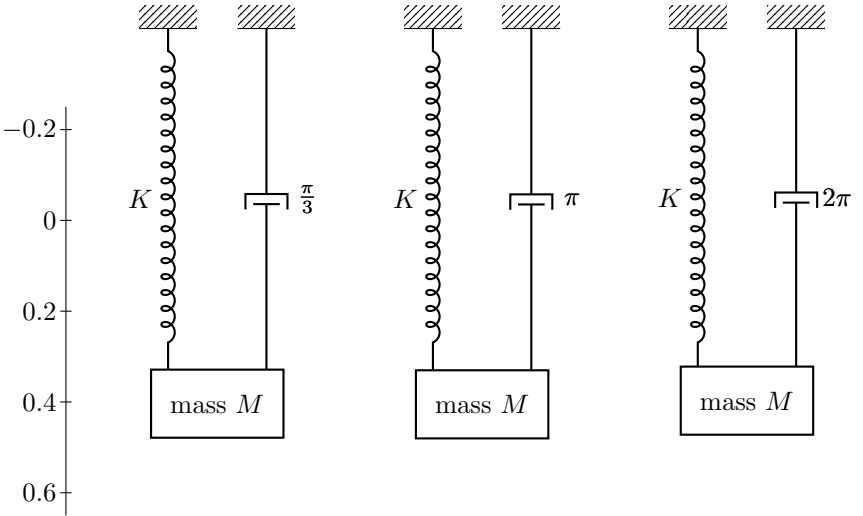
K
$\frac{\pi}{3}$
mass M
K
π
mass M
K
2π
mass M
−0.2
0
0.2
0.4
0.6

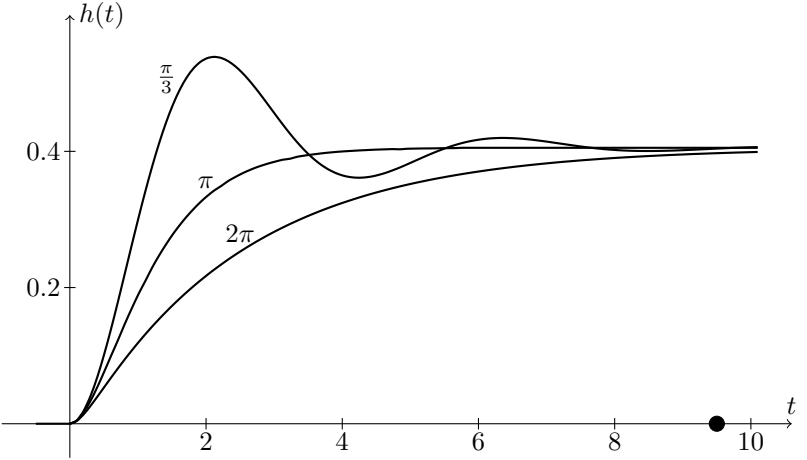
$h(t)$
$\frac{\pi}{3}$
π
2π
0.4
0.2
t
2
4
6
8
10

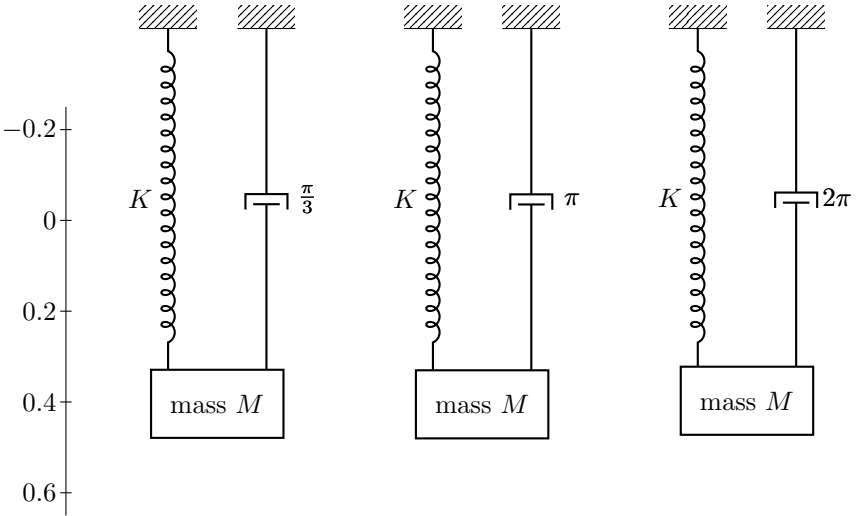
K
$\frac{\pi}{3}$
mass M
K
π
mass M
K
2π
mass M
−0.2
0
0.2
0.4
0.6

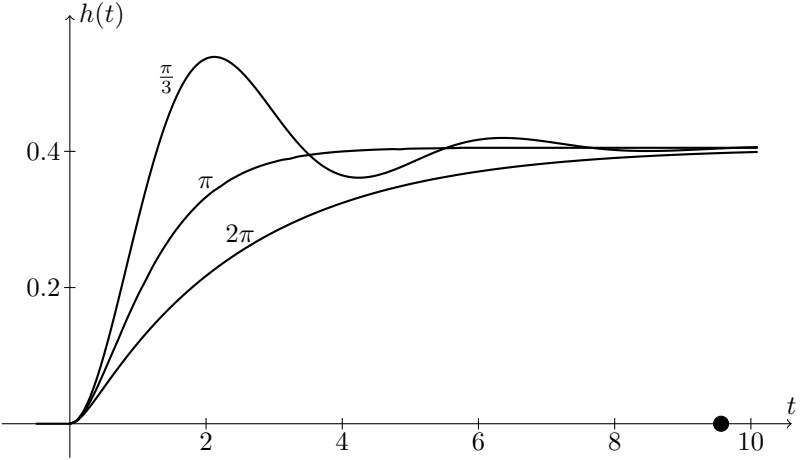
$h(t)$
$\frac{\pi}{3}$
π
2π
0.4
0.2
t
2
4
6
8
10

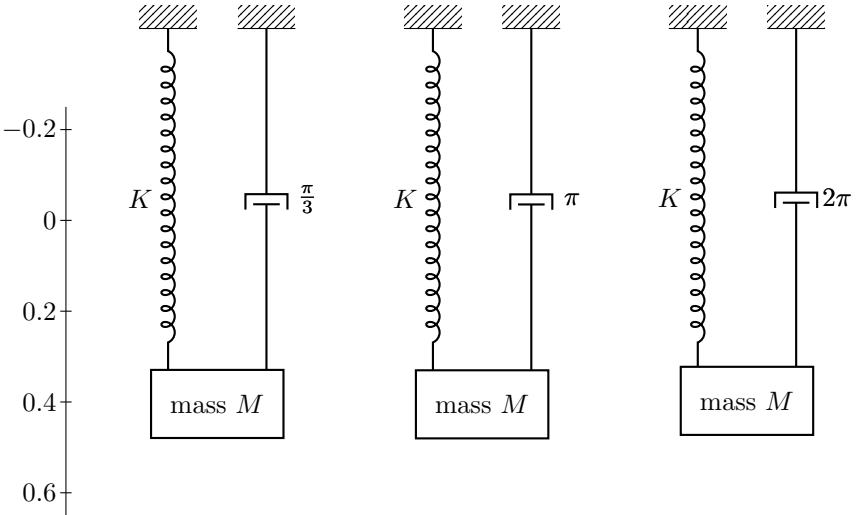
K
$\frac{\pi}{3}$
mass M
K
π
mass M
K
2π
mass M
−0.2
0
0.2
0.4
0.6

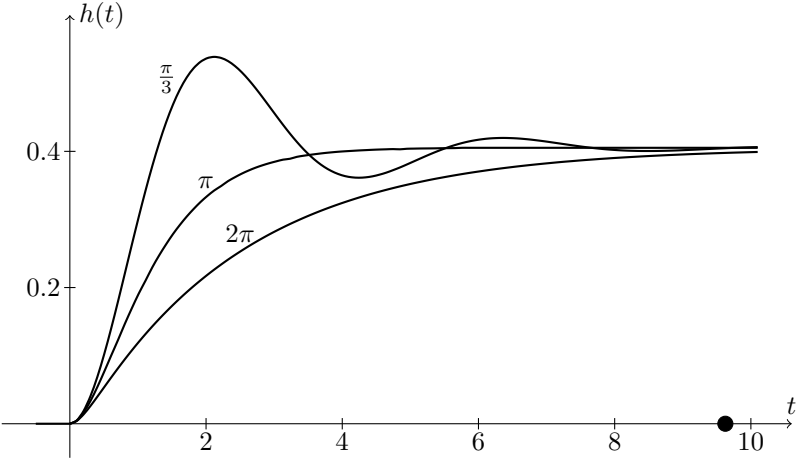
$h(t)$
$\frac{\pi}{3}$
π
2π
0.4
0.2
t
2
4
6
8
10

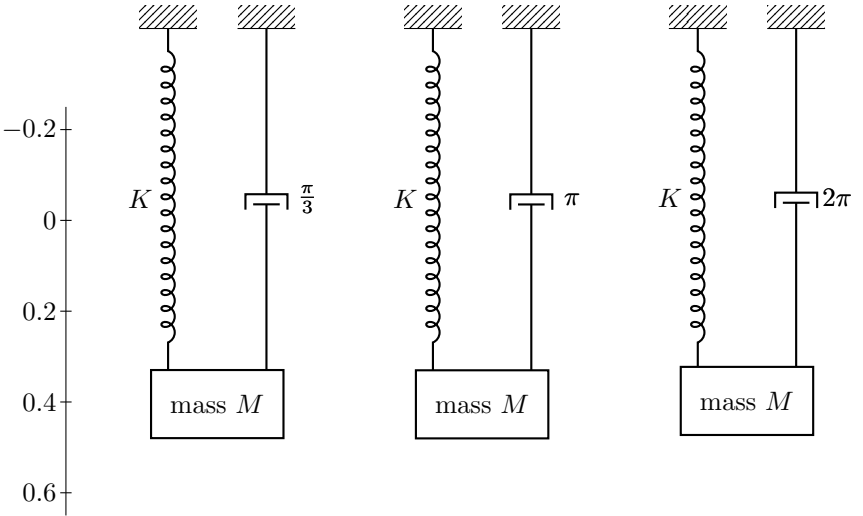
K
$\frac{\pi}{3}$
mass M
K
π
mass M
K
2π
mass M
−0.2
0
0.2
0.4
0.6

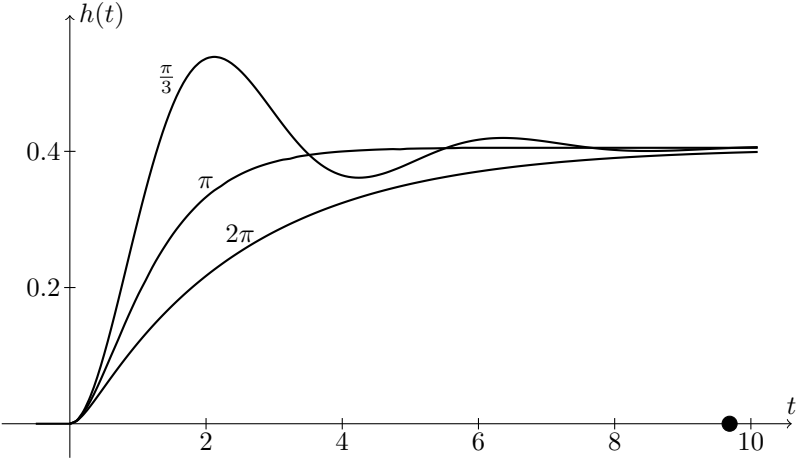
$h(t)$
$\frac{\pi}{3}$
π
2π
0.4
0.2
t
2
4
6
8
10

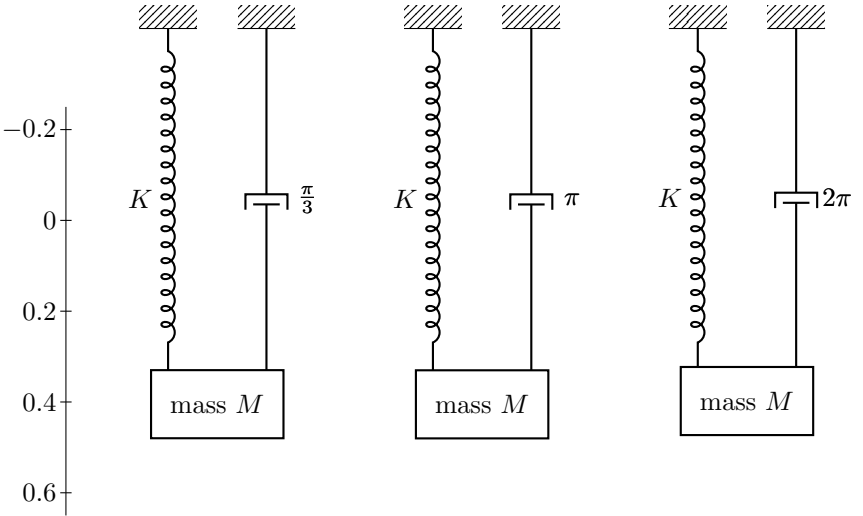
-0.2
0
0.2
0.4
0.6
K
$\frac{\pi}{3}$
mass M
K
π
mass M
K
2π
mass M

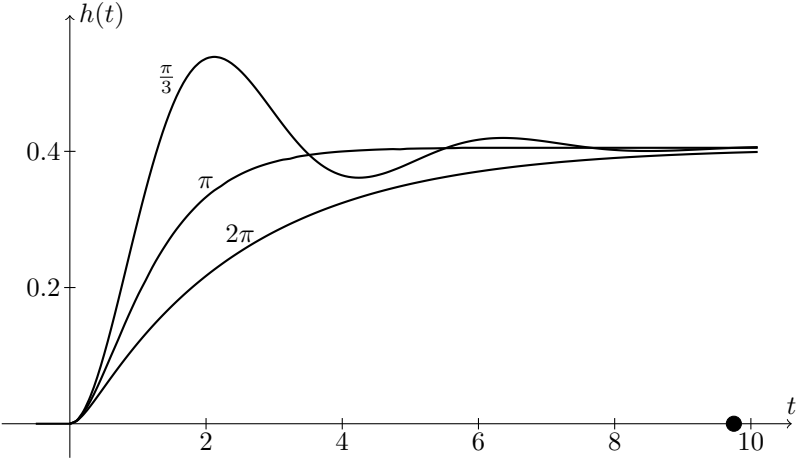
$h(t)$
$\frac{\pi}{3}$
π
2π
0.4
0.2
t
2
4
6
8
10

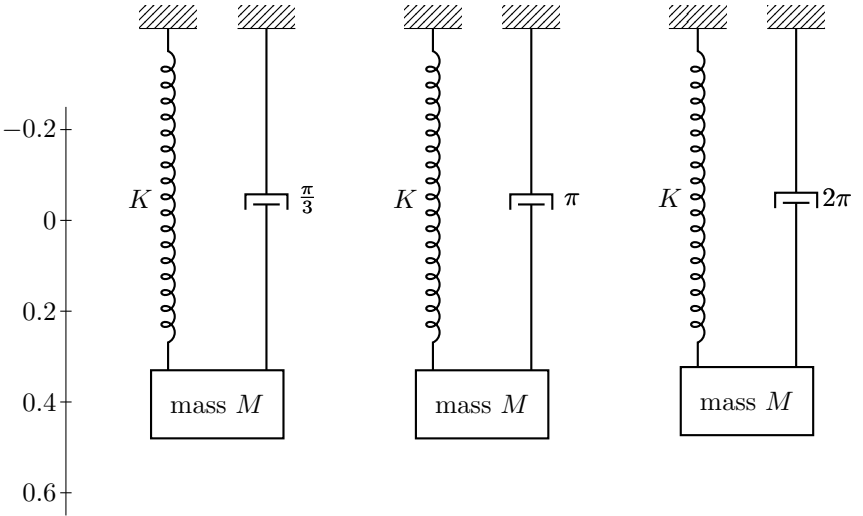
−0.2
0
0.2
0.4
0.6
K
$\frac{\pi}{3}$
mass M
K
π
mass M
K
2π
mass M

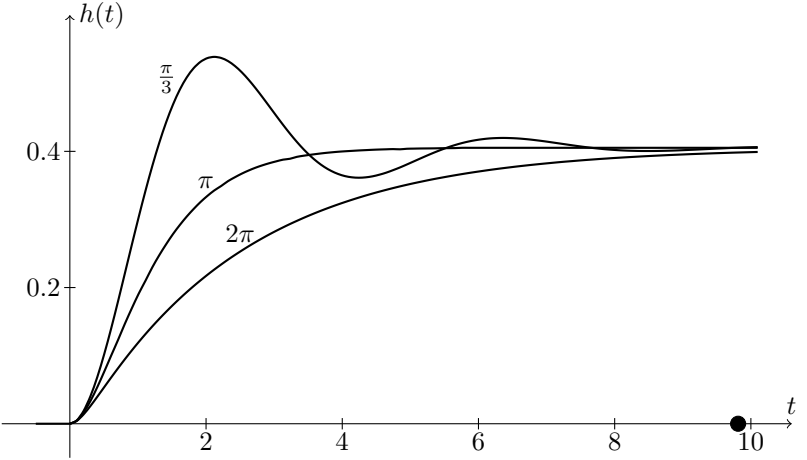
$h(t)$
$\frac{\pi}{3}$
π
2π
0.4
0.2
t
2
4
6
8
10

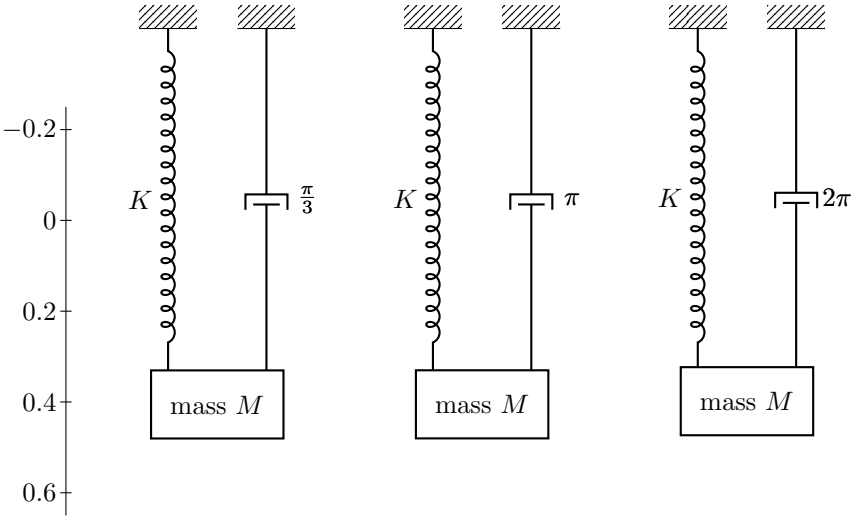
K
$\frac{\pi}{3}$
mass M
K
π
mass M
K
2π
mass M
−0.2
0
0.2
0.4
0.6

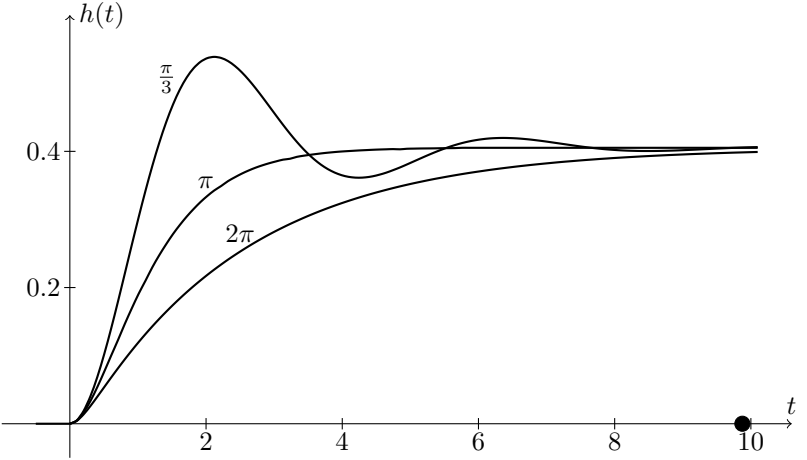
$h(t)$
$\frac{\pi}{3}$
π
2π
0.4
0.2
t
2
4
6
8
10

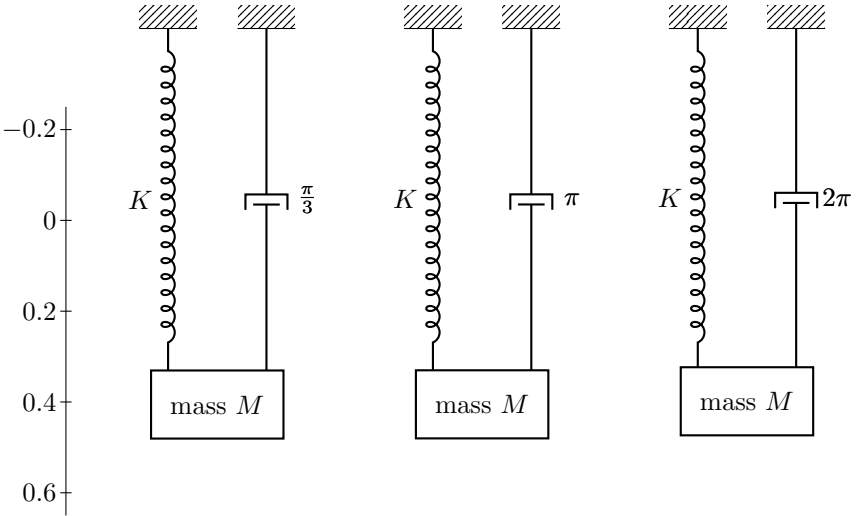
K
$\frac{\pi}{3}$
mass M
K
π
mass M
K
2π
mass M
−0.2
0
0.2
0.4
0.6

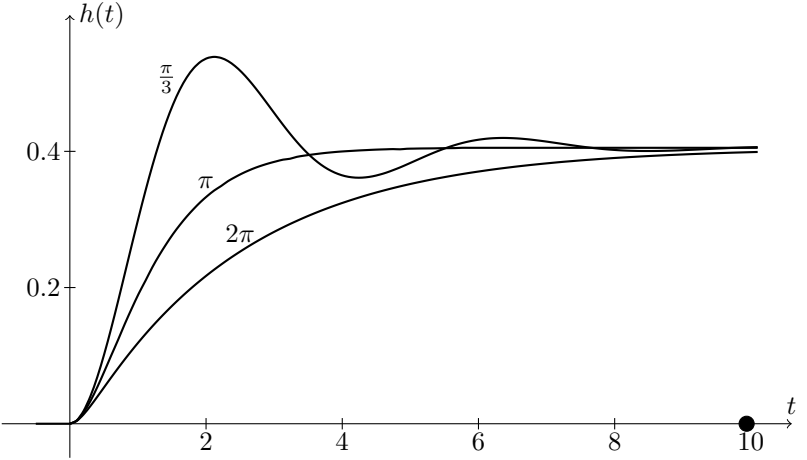
$h(t)$
$\frac{\pi}{3}$
π
2π
0.4
0.2
t
2
4
6
8
10

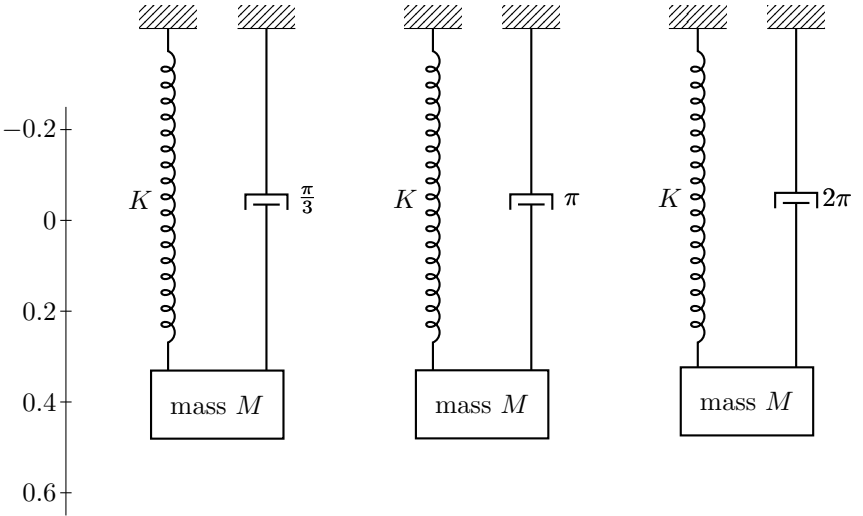
K
$\frac{\pi}{3}$
mass M
K
π
mass M
K
2π
mass M
−0.2
0
0.2
0.4
0.6

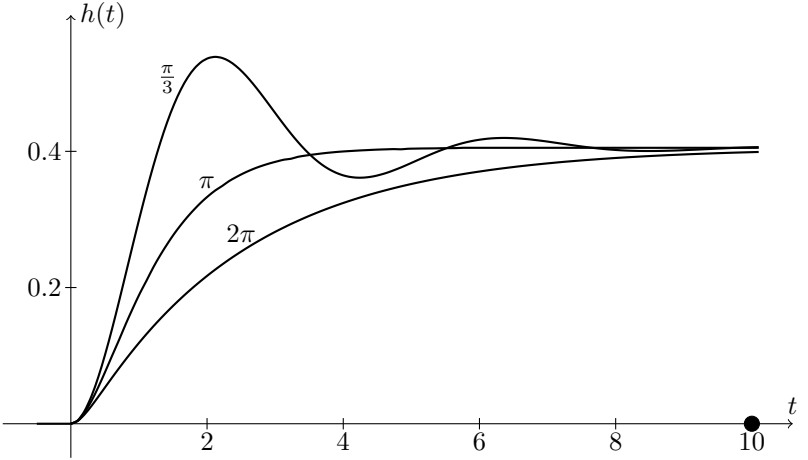
$h(t)$
$\frac{\pi}{3}$
π
2π
0.4
0.2
t
2
4
6
8
10

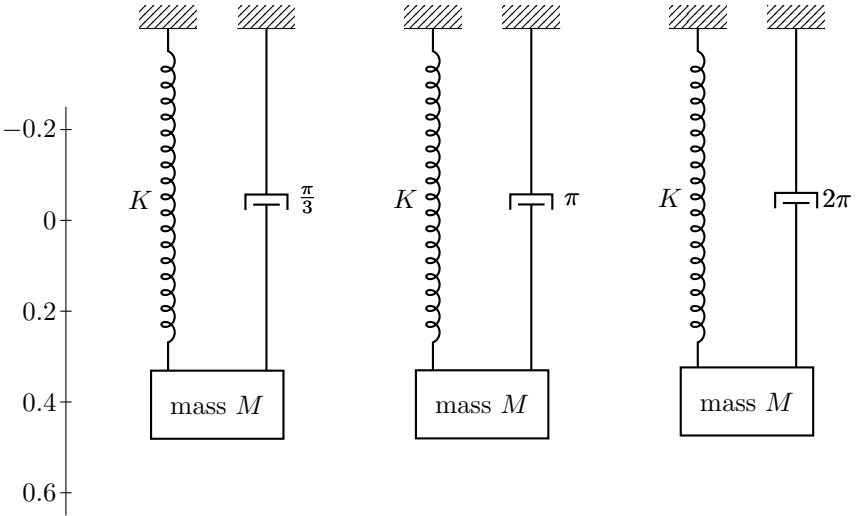
-0.2
0
0.2
0.4
0.6
K
$\frac{\pi}{3}$
mass M
K
π
mass M
K
2π
mass M

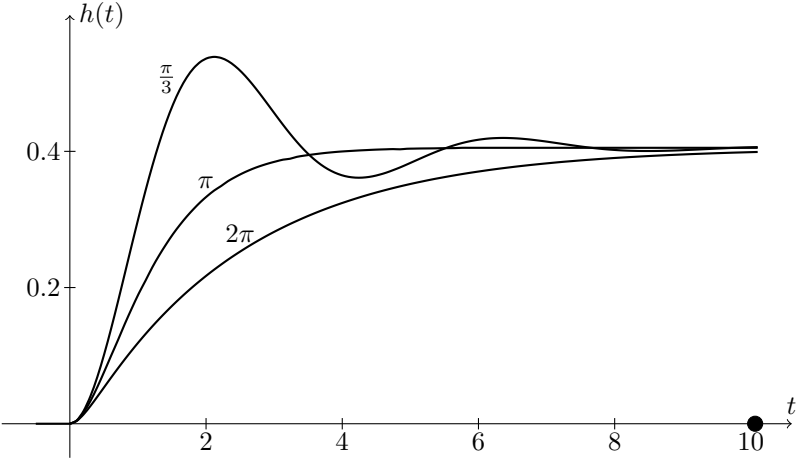
$h(t)$
$\frac{\pi}{3}$
π
2π
0.4
0.2
t
2
4
6
8
10

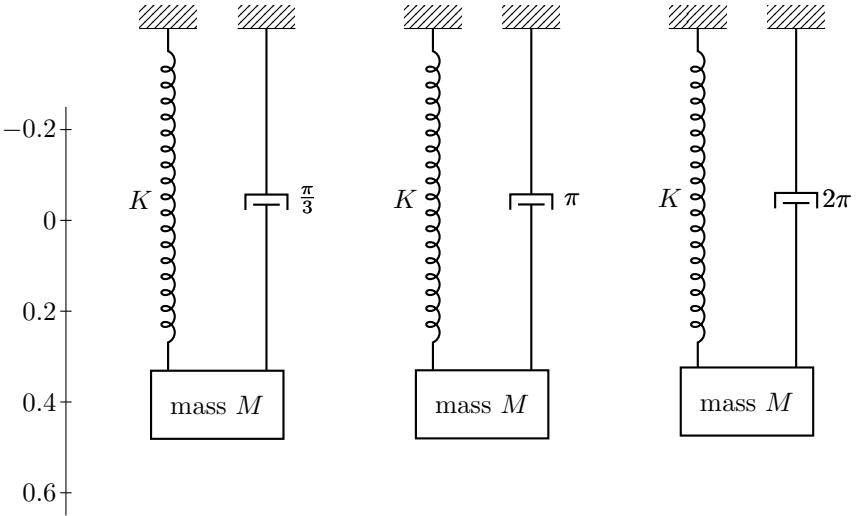
-0.2
0
0.2
0.4
0.6
K
$\frac{\pi}{3}$
mass M
K
π
mass M
K
2π
mass M

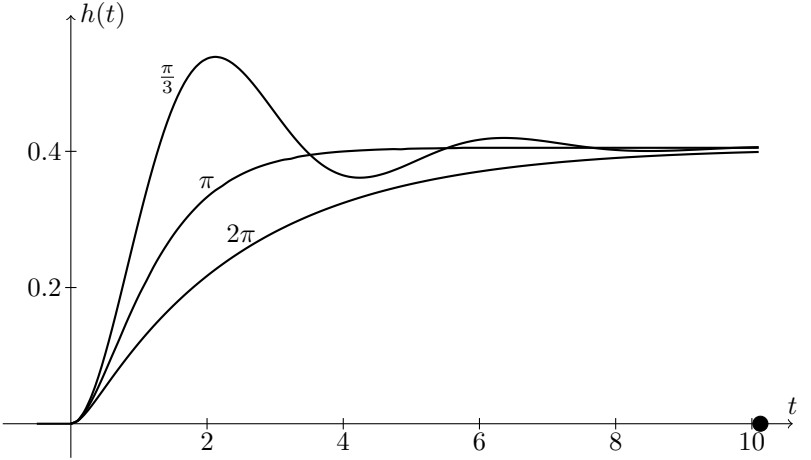
$h(t)$
$\frac{\pi}{3}$
π
2π
0.4
0.2
t
2
4
6
8
10

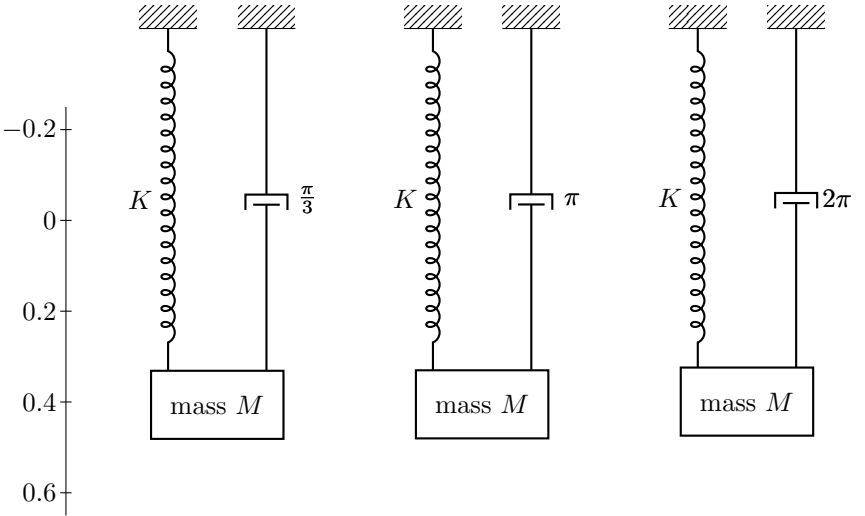
-0.2
0
0.2
0.4
0.6
K
$\frac{\pi}{3}$
mass M
K
π
mass M
K
2π
mass M

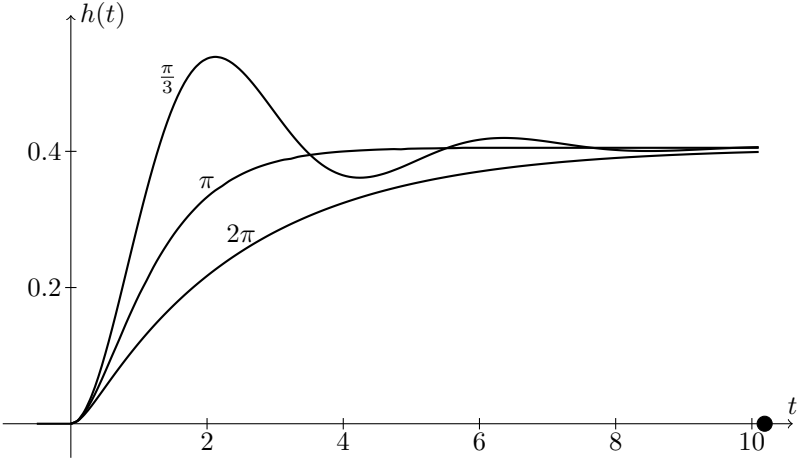
$h(t)$
$\frac{\pi}{3}$
π
2π
0.4
0.2
t
2
4
6
8
10

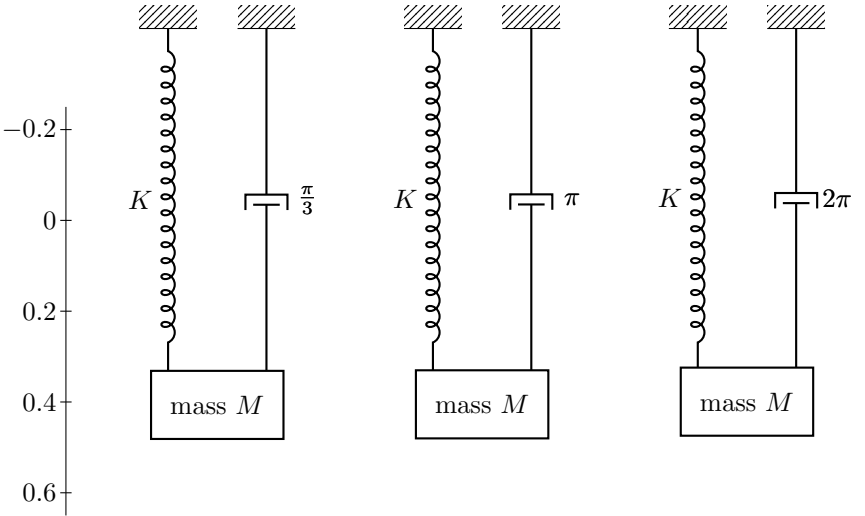
-0.2
0
0.2
0.4
0.6
K
$\frac{\pi}{3}$
mass M
K
π
mass M
K
2π
mass M

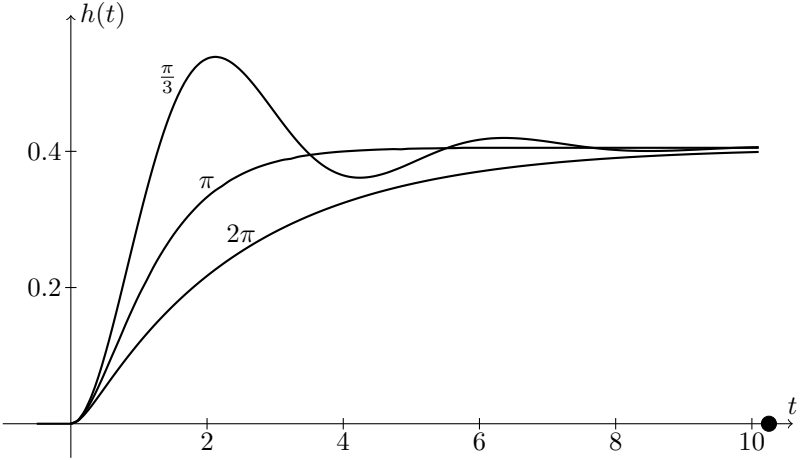
$h(t)$
$\frac{\pi}{3}$
π
2π
0.4
0.2
t
2
4
6
8
10

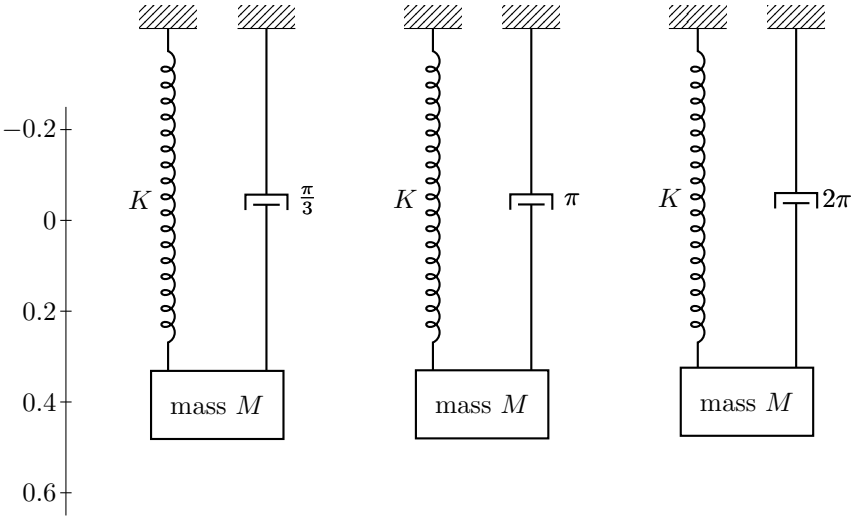
−0.2
0
0.2
0.4
0.6
K
$\frac{\pi}{3}$
mass M
K
π
mass M
K
2π
mass M

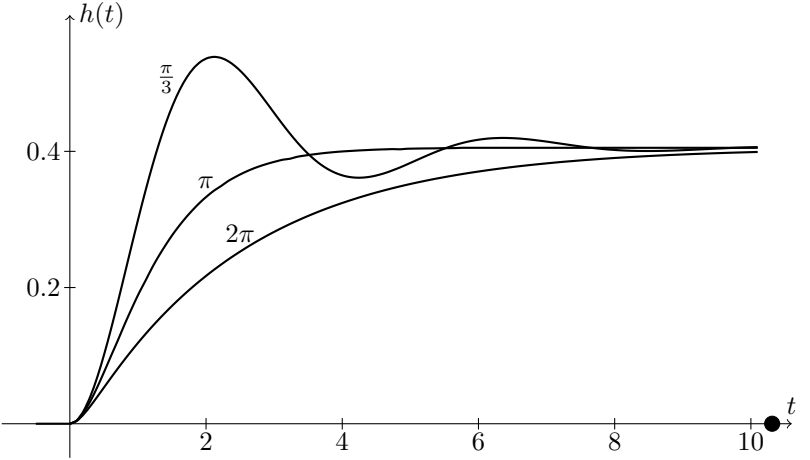
$h(t)$
$\frac{\pi}{3}$
π
2π
0.4
0.2
2
4
6
8
10
t

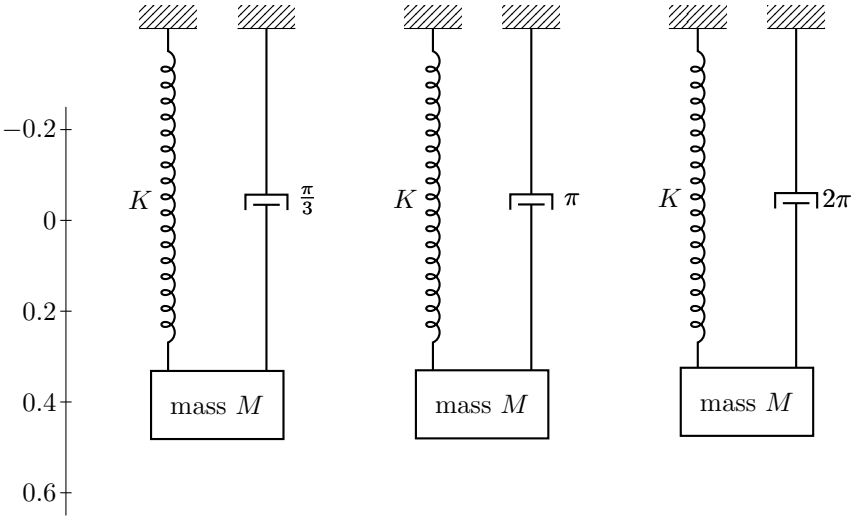
K
$\frac{\pi}{3}$
mass M
K
π
mass M
K
2π
mass M
−0.2
0
0.2
0.4
0.6

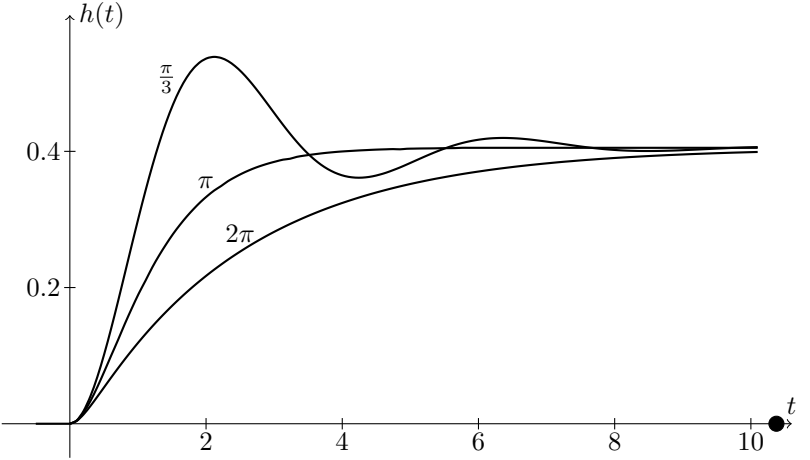
h(t)
π/3
π
2π
0.4
0.2
t
2
4
6
8
10

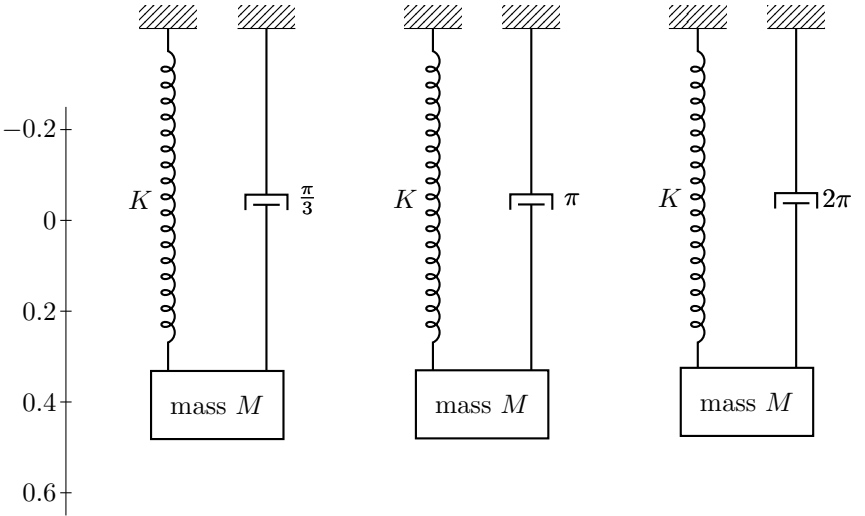
−0.2
0
0.2
0.4
0.6
K
π/3
mass M
K
π
mass M
K
2π
mass M

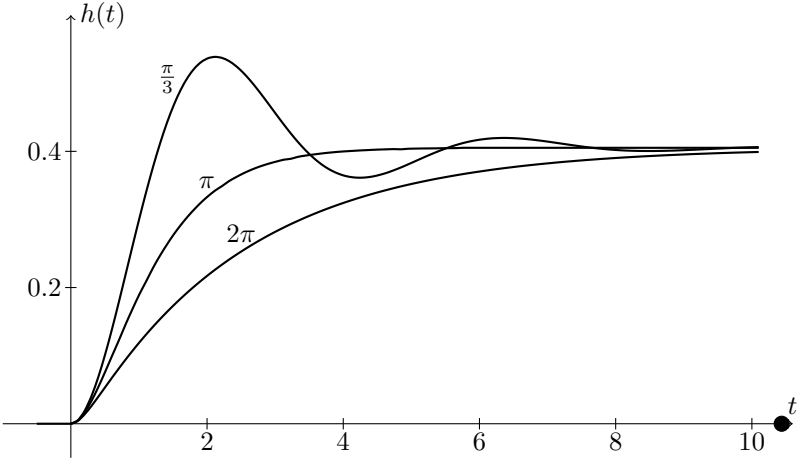
h(t)
π/3
π
2π
0.4
0.2
t
2
4
6
8
10

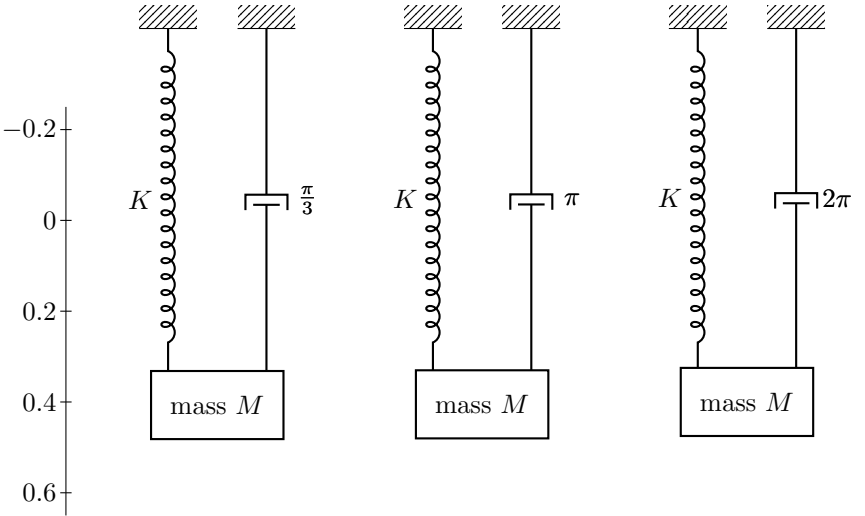
−0.2
0
0.2
0.4
0.6
K
π/3
mass M
K
π
mass M
K
2π
mass M

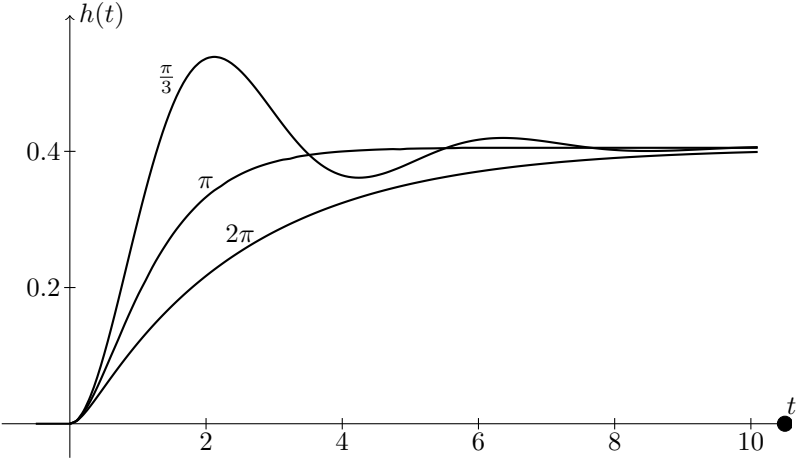
$h(t)$
$\frac{\pi}{3}$
π
2π
0.4
0.2
t
2
4
6
8
10

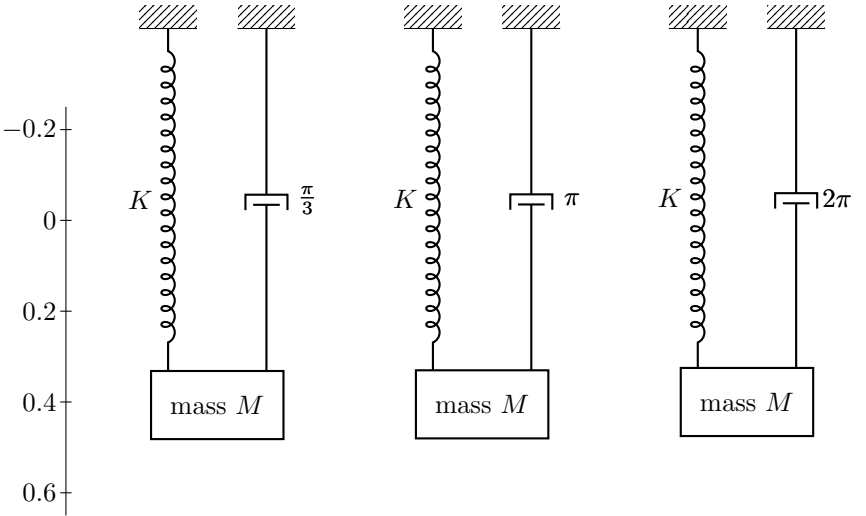
K
$\frac{\pi}{3}$
mass M
K
π
mass M
K
2π
mass M
−0.2
0
0.2
0.4
0.6

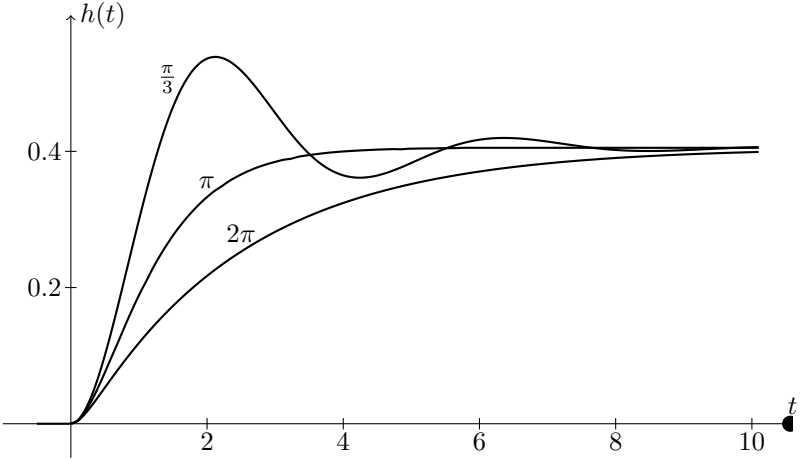
h(t)
π/3
π
2π
0.4
0.2
t
2
4
6
8
10

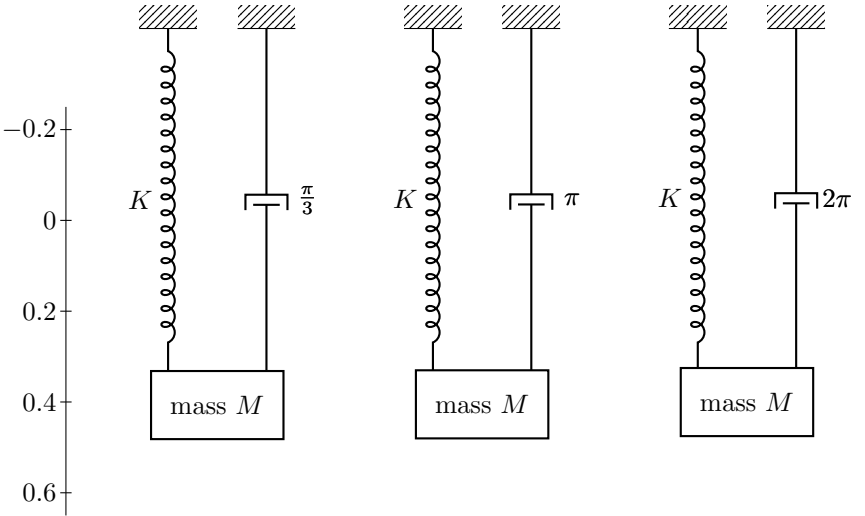
−0.2
0
0.2
0.4
0.6
K
π/3
mass M
K
π
mass M
K
2π
mass M

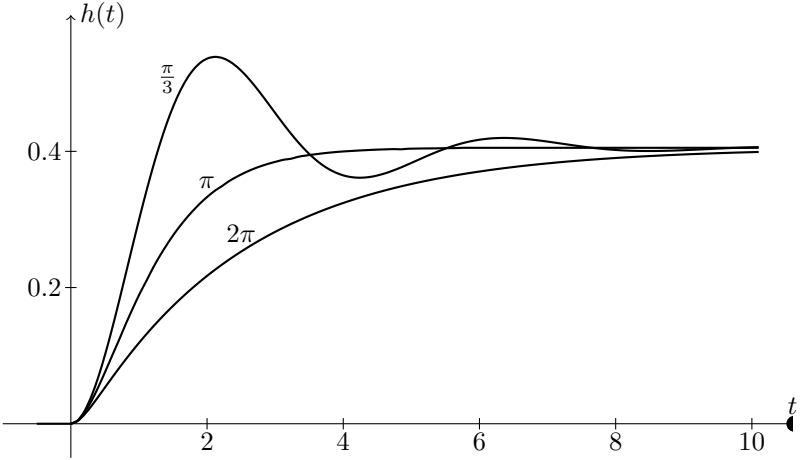
h(t)
π/3
π
2π
0.4
0.2
t
2
4
6
8
10

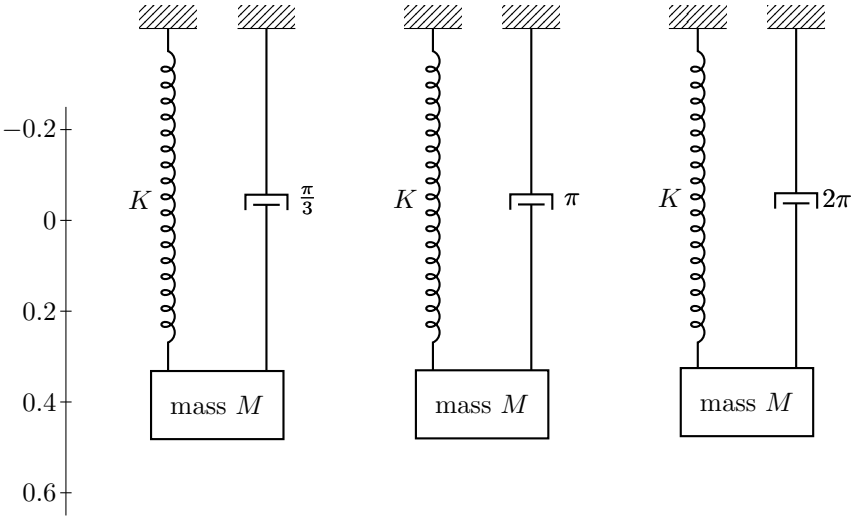
−0.2
0
0.2
0.4
0.6
K
π/3
mass M
K
π
mass M
K
2π
mass M

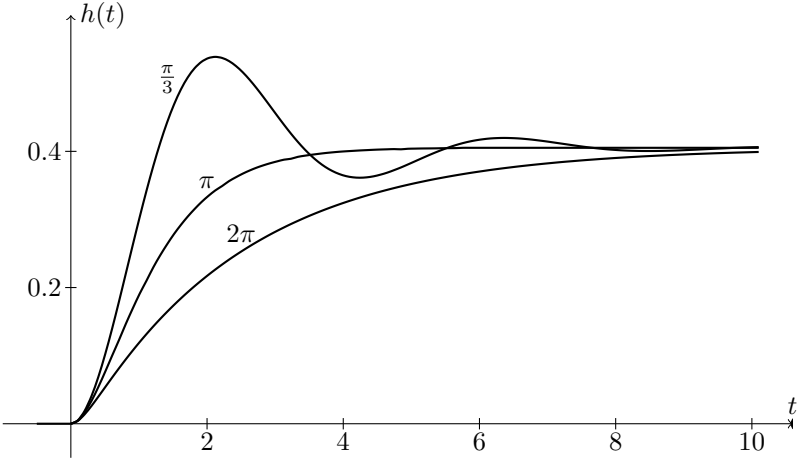
h(t)
π/3
π
2π
0.4
0.2
t
2
4
6
8
10

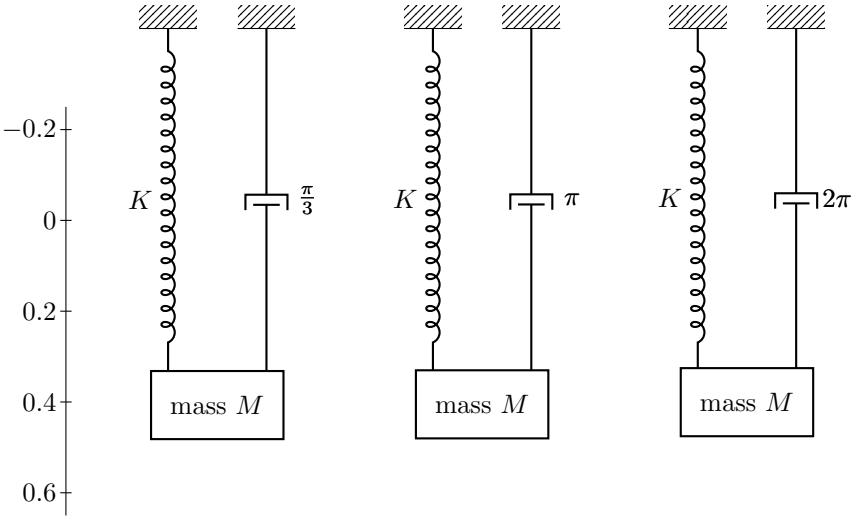
−0.2
0
0.2
0.4
0.6
K
π/3
mass M
K
π
mass M
K
2π
mass M

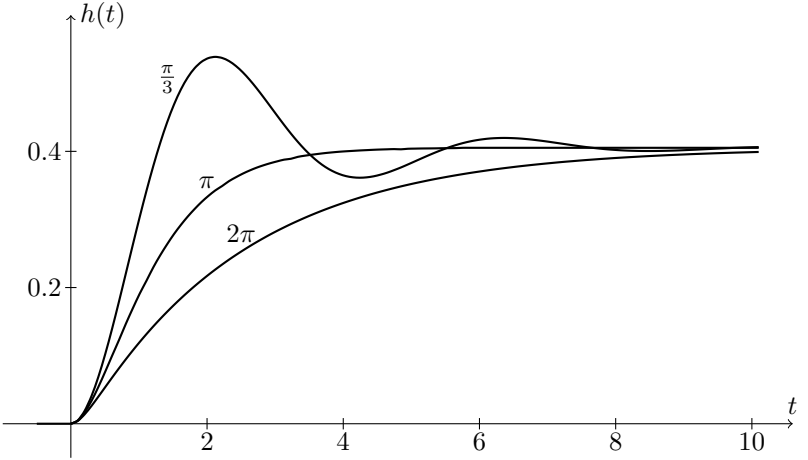
$h(t)$
$\frac{\pi}{3}$
π
2π
0.4
0.2
t
2
4
6
8
10

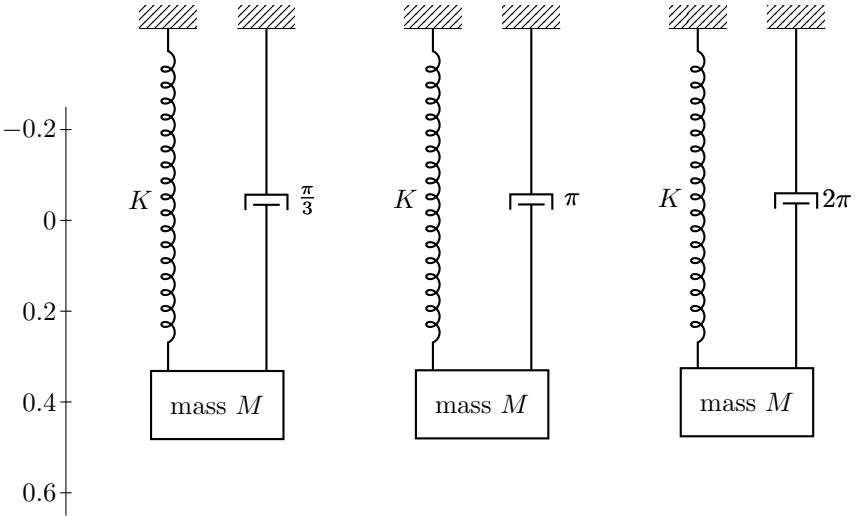
-0.2
0
0.2
0.4
0.6
K
$\frac{\pi}{3}$
mass M
K
π
mass M
K
2π
mass M

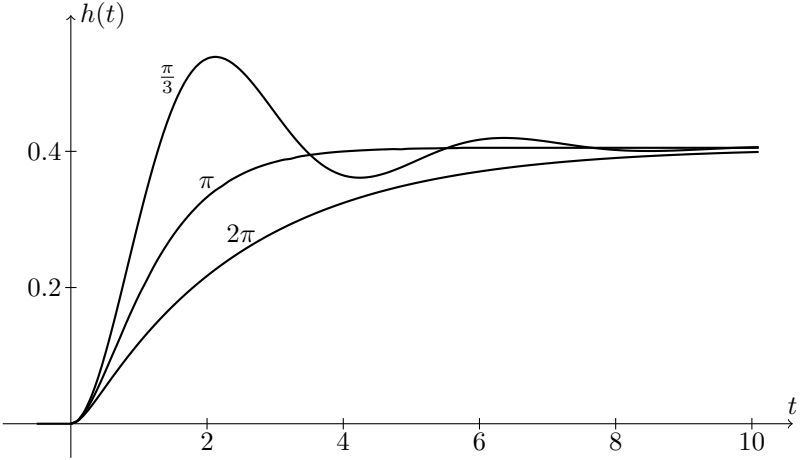
$h(t)$
$\frac{\pi}{3}$
π
2π
0.4
0.2
t
2
4
6
8
10

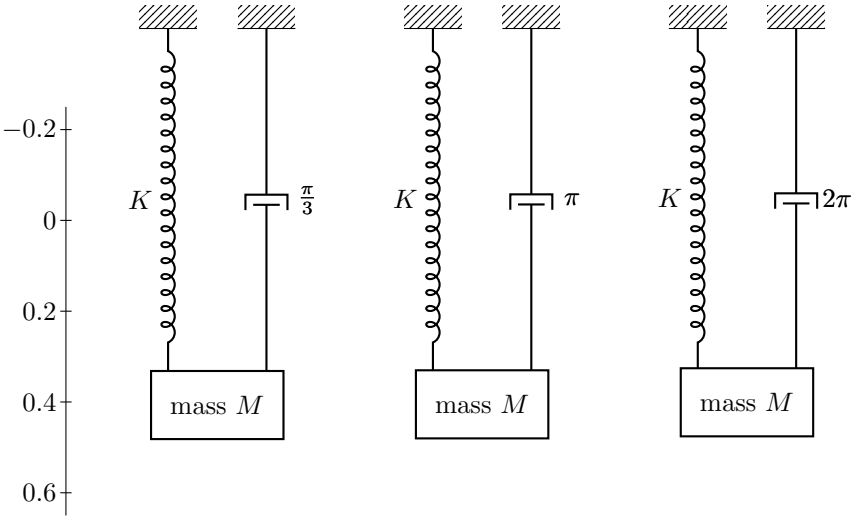
K
$\frac{\pi}{3}$
mass M
K
π
mass M
K
2π
mass M
−0.2
0
0.2
0.4
0.6

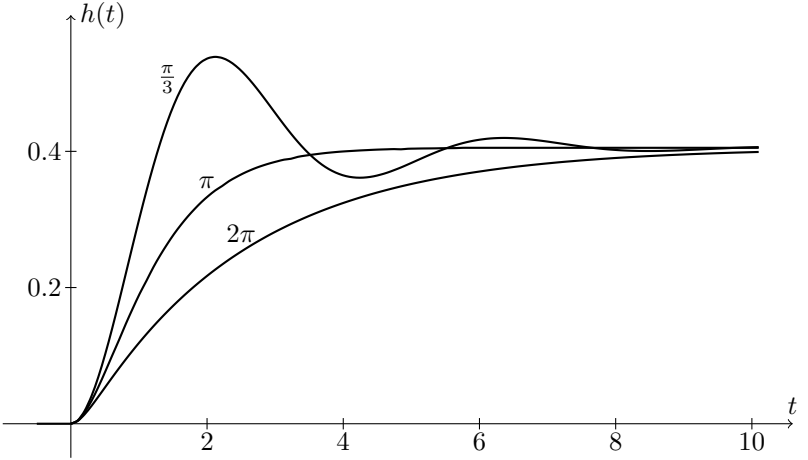
$h(t)$
$\frac{\pi}{3}$
π
2π
0.4
0.2
t
2
4
6
8
10

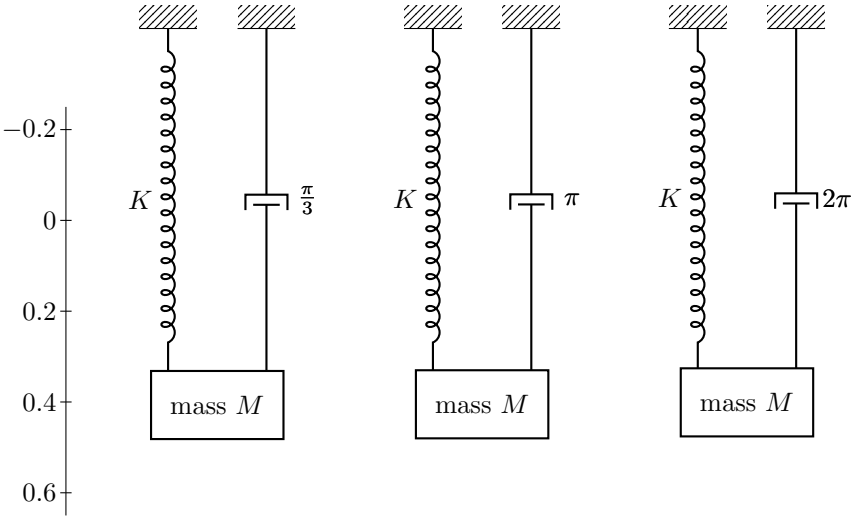
-0.2
0
0.2
0.4
0.6
K
$\frac{\pi}{3}$
mass M
K
π
mass M
K
2π
mass M

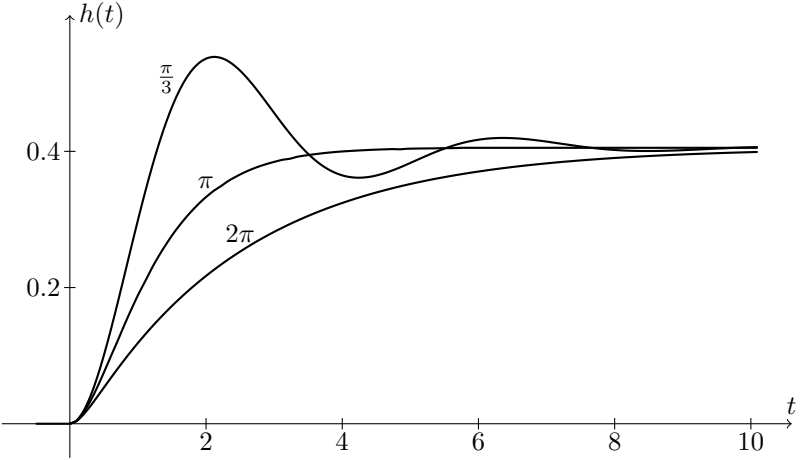
$h(t)$
$\frac{\pi}{3}$
π
2π
0.4
0.2
t
2
4
6
8
10

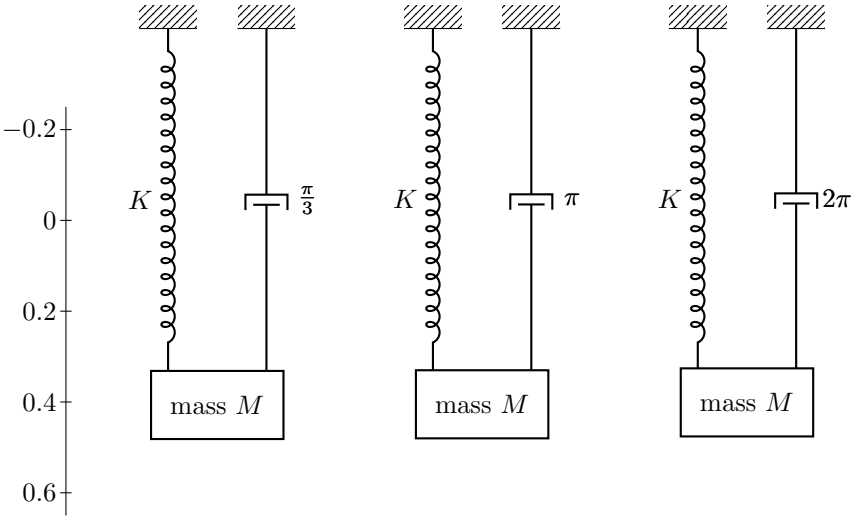
K
$\frac{\pi}{3}$
mass M
K
π
mass M
K
2π
mass M
−0.2
0
0.2
0.4
0.6

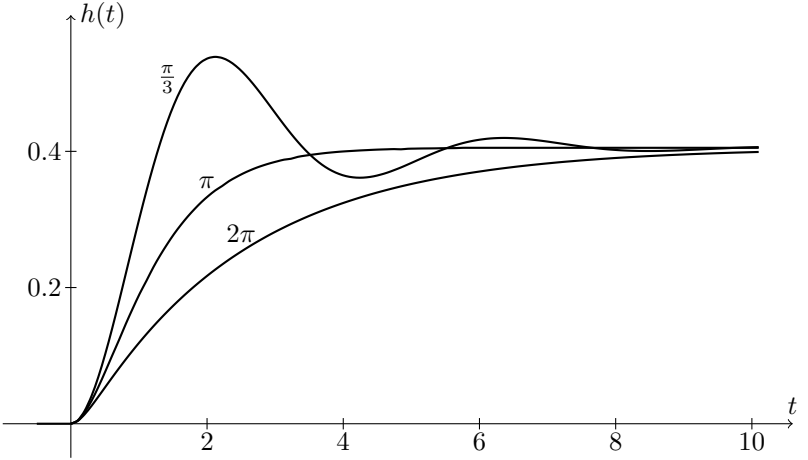
$h(t)$
$\frac{\pi}{3}$
π
2π
0.4
0.2
t
2
4
6
8
10

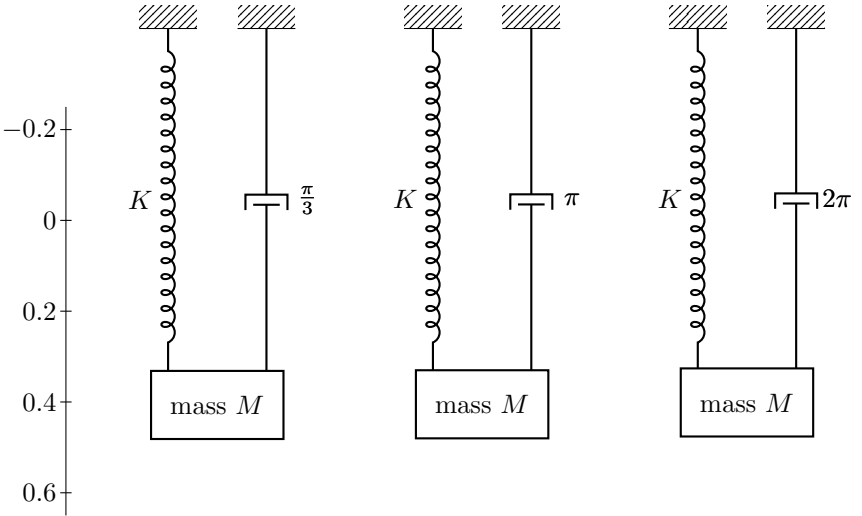
-0.2
0
0.2
0.4
0.6
K
$\frac{\pi}{3}$
mass M
K
π
mass M
K
2π
mass M

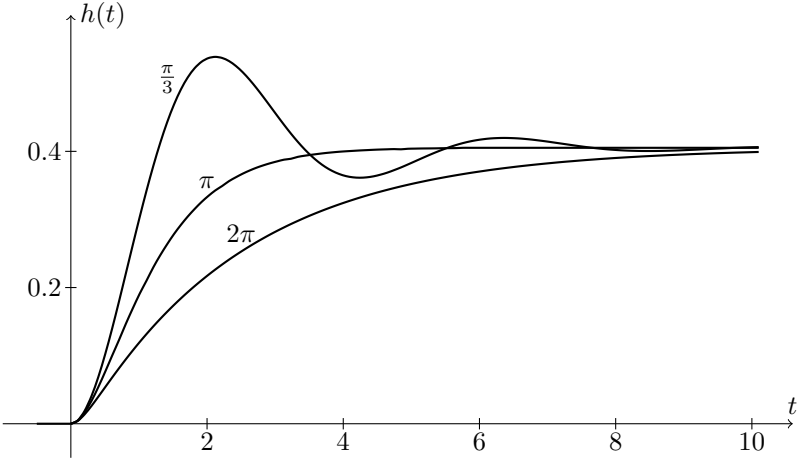
$h(t)$
$\frac{\pi}{3}$
π
2π
0.4
0.2
t
2
4
6
8
10

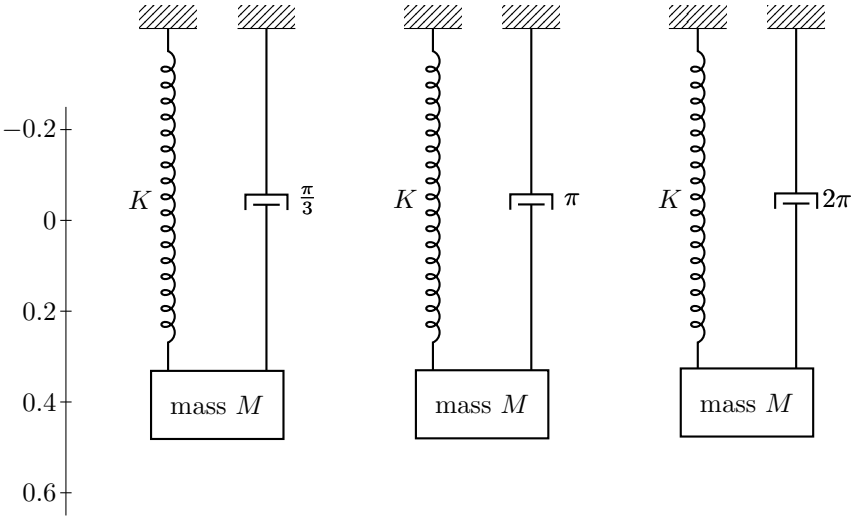
-0.2
0
0.2
0.4
0.6
K
$\frac{\pi}{3}$
mass M
K
π
mass M
K
2π
mass M

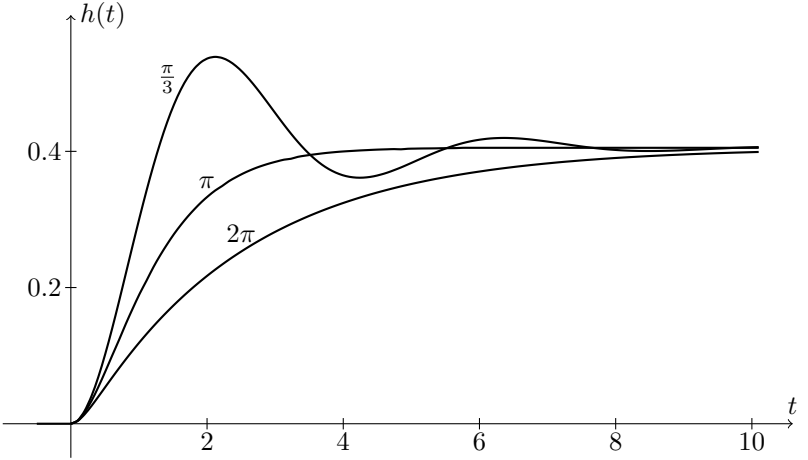
$h(t)$
$\frac{\pi}{3}$
π
2π
0.4
0.2
t
2
4
6
8
10

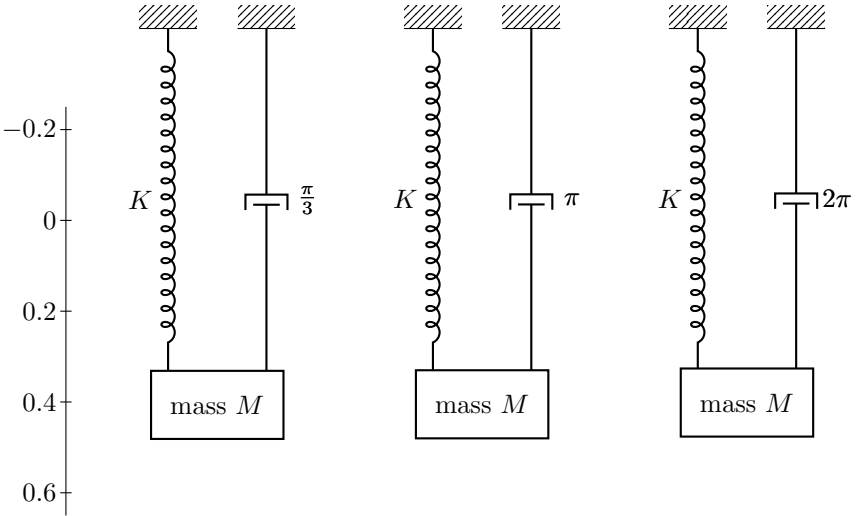
K
$\frac{\pi}{3}$
mass M
K
π
mass M
K
2π
mass M
−0.2
0
0.2
0.4
0.6

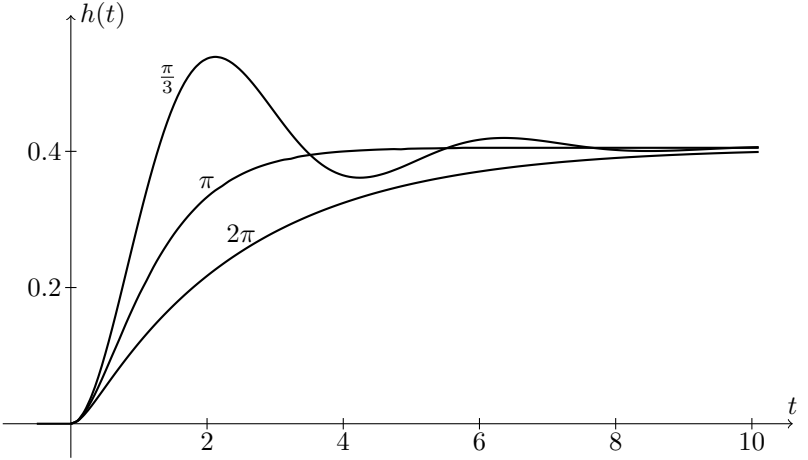
$h(t)$
$\frac{\pi}{3}$
π
2π
0.4
0.2
t
2
4
6
8
10

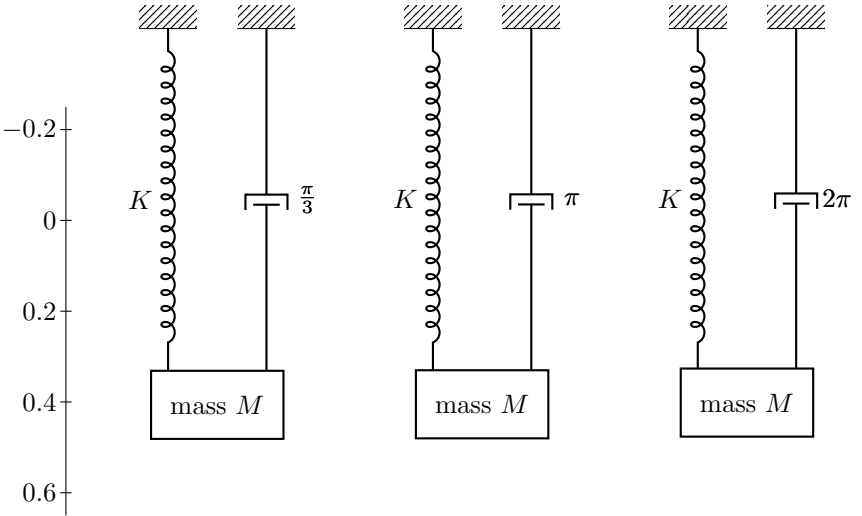
-0.2
0
0.2
0.4
0.6
K
$\frac{\pi}{3}$
mass M
K
π
mass M
K
2π
mass M

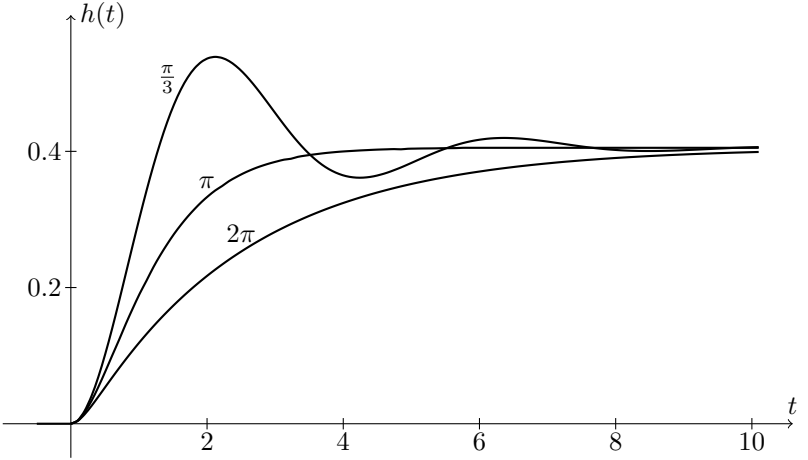
$h(t)$
$\frac{\pi}{3}$
π
2π
0.4
0.2
t
2
4
6
8
10

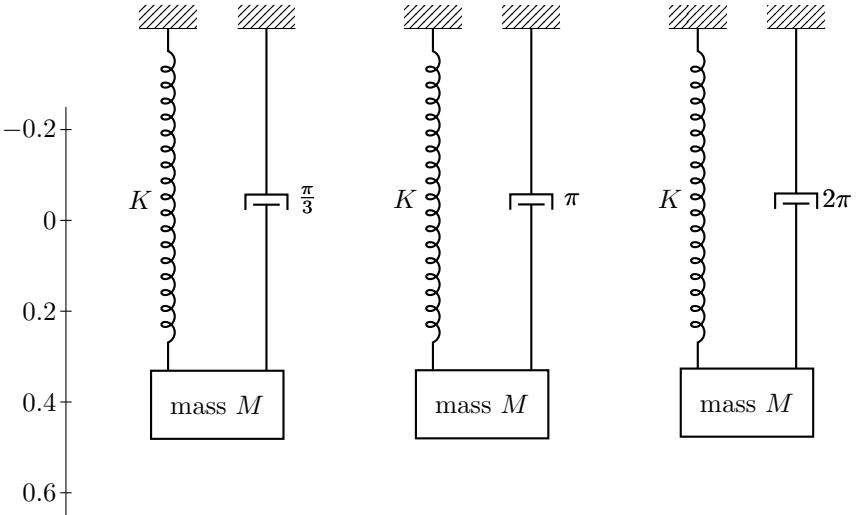
-0.2
0
0.2
0.4
0.6
K
$\frac{\pi}{3}$
mass M
K
π
mass M
K
2π
mass M

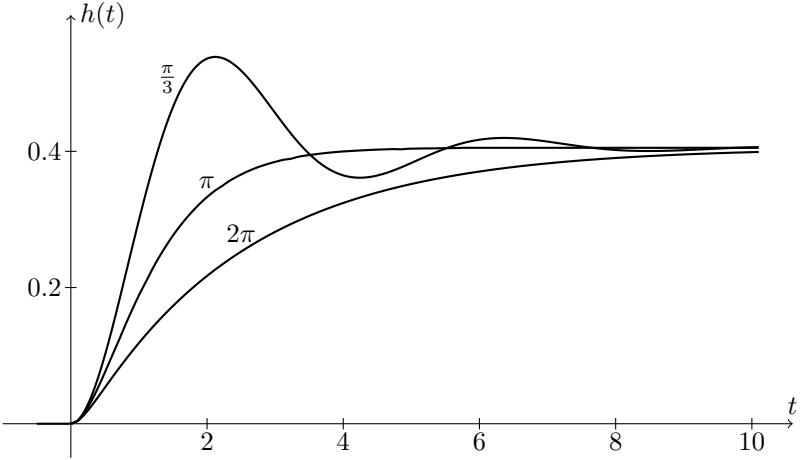
$h(t)$
$\frac{\pi}{3}$
π
2π
0.4
0.2
t
2
4
6
8
10

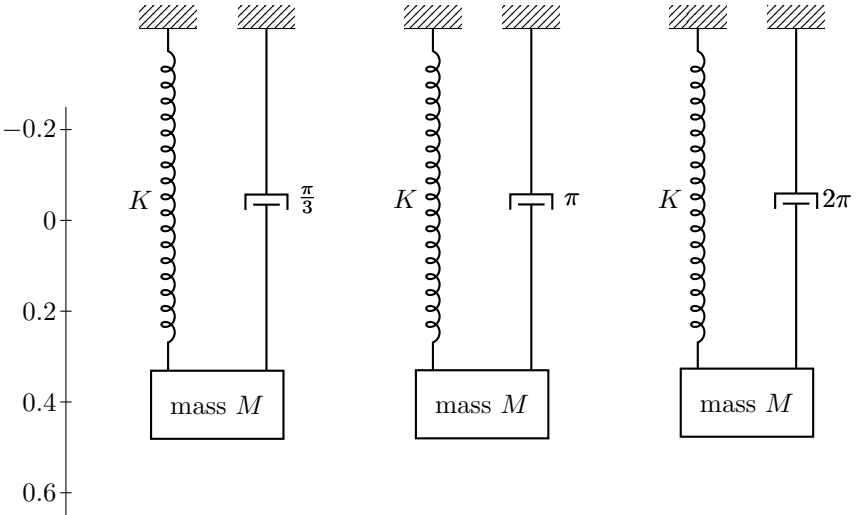
−0.2
0
0.2
0.4
0.6
K
$\frac{\pi}{3}$
mass M
K
π
mass M
K
2π
mass M

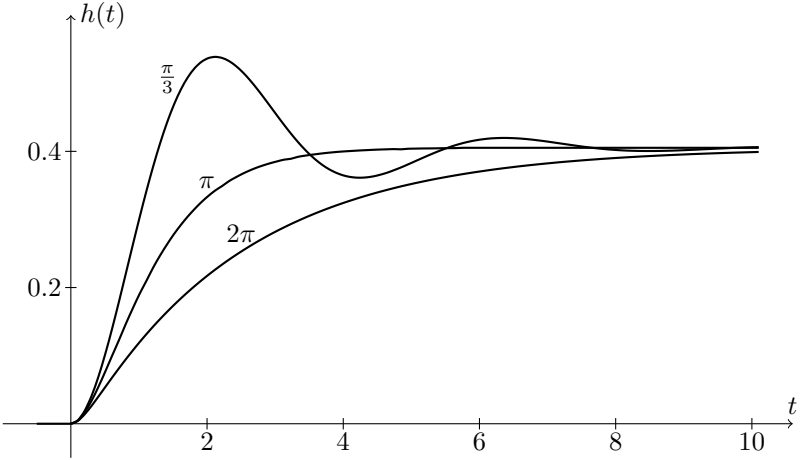
$h(t)$
$\frac{\pi}{3}$
π
2π
0.4
0.2
t
2
4
6
8
10

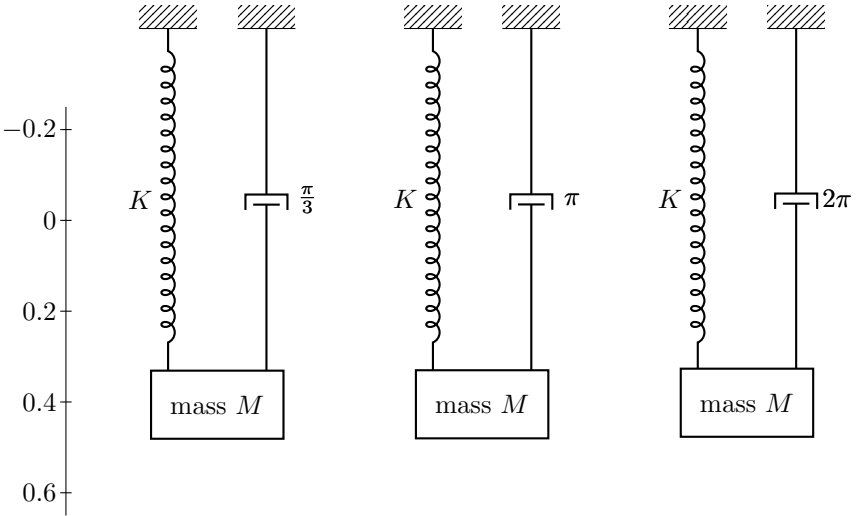
K
$\frac{\pi}{3}$
mass M
K
π
mass M
K
2π
mass M
−0.2
0
0.2
0.4
0.6

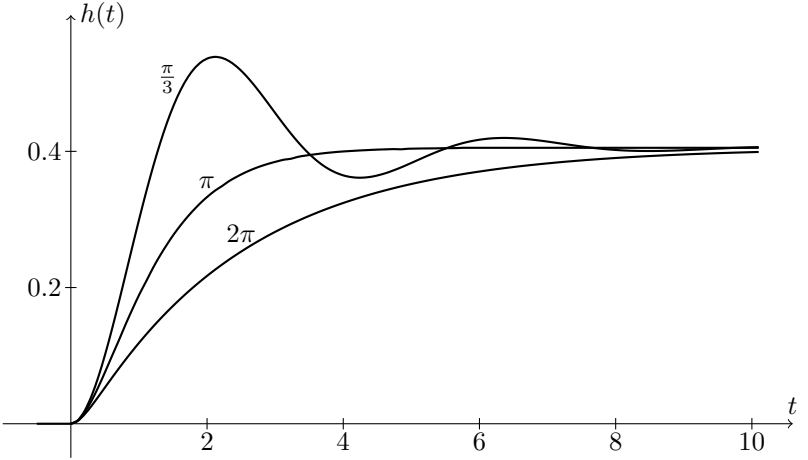
$h(t)$
$\frac{\pi}{3}$
π
2π
0.4
0.2
t
2
4
6
8
10

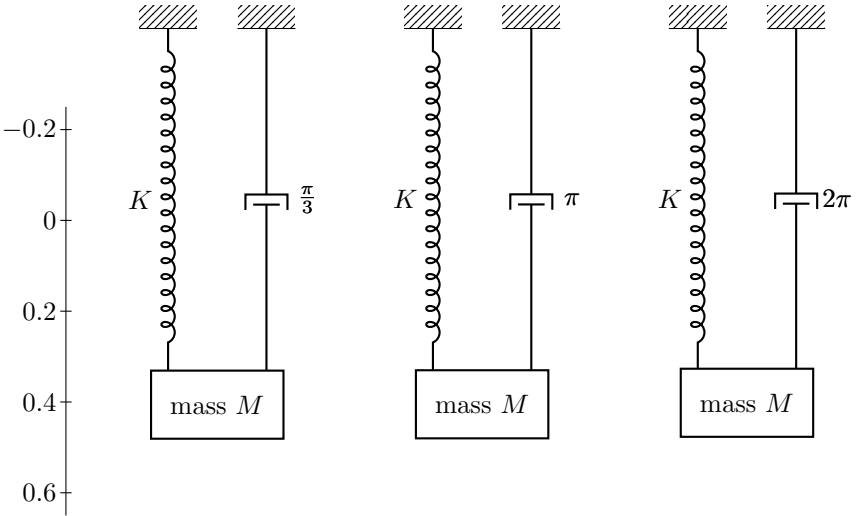
K
$\frac{\pi}{3}$
mass M
K
π
mass M
K
2π
mass M
−0.2
0
0.2
0.4
0.6

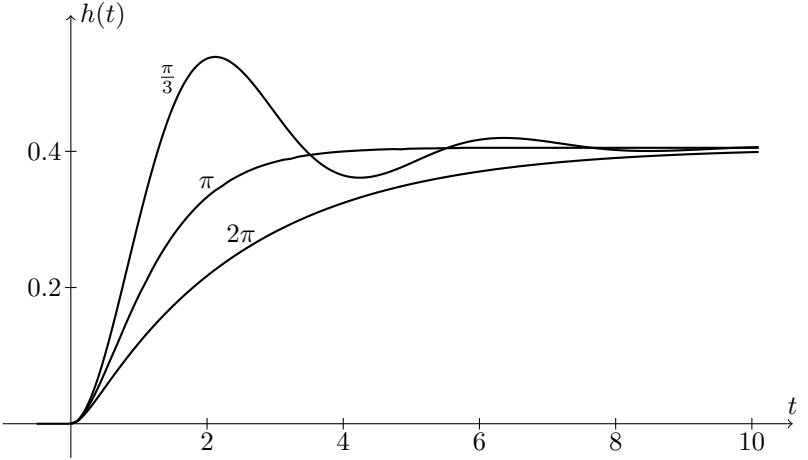
h(t)
π/3
π
2π
0.4
0.2
t
2
4
6
8
10

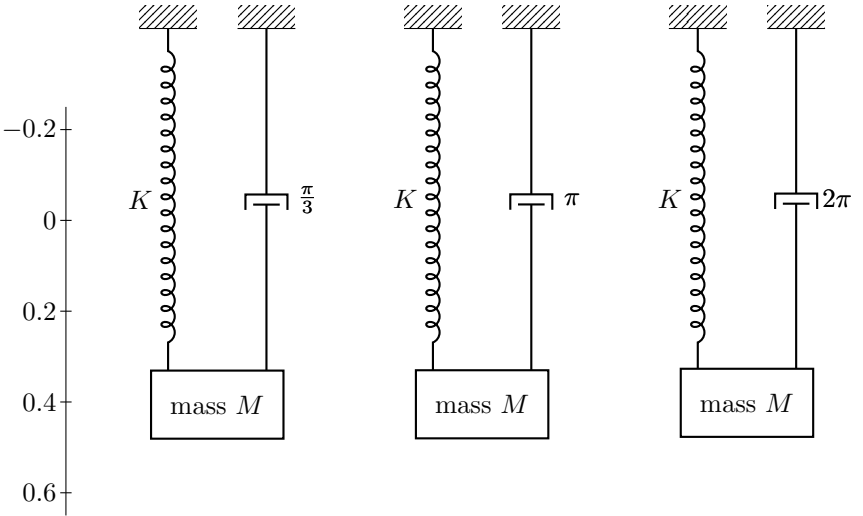
−0.2
0
0.2
0.4
0.6
K
π/3
mass M
K
π
mass M
K
2π
mass M

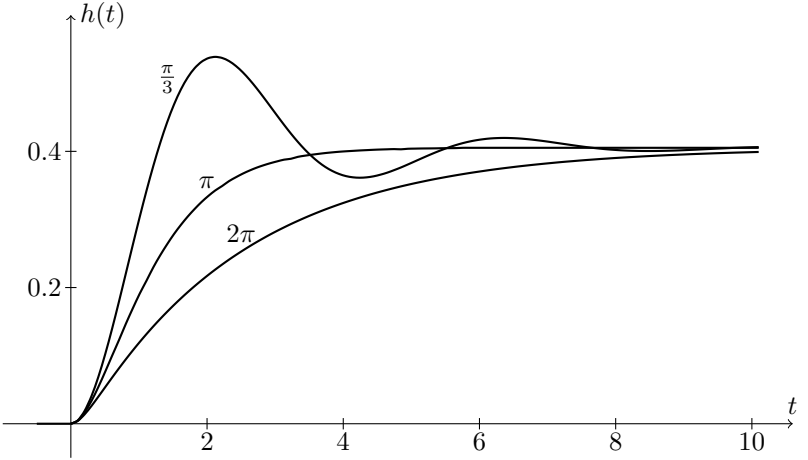
$h(t)$
$\frac{\pi}{3}$
π
2π
0.4
0.2
t
2
4
6
8
10

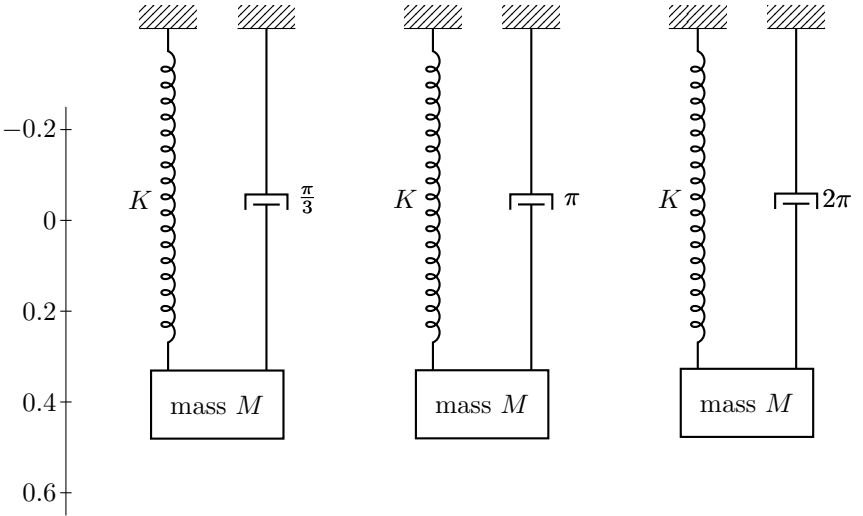
-0.2
0
0.2
0.4
0.6
K
$\frac{\pi}{3}$
mass M
K
π
mass M
K
2π
mass M

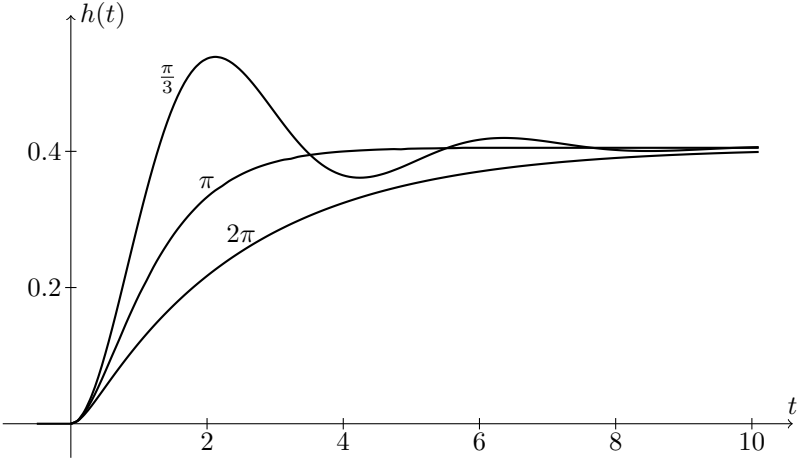
$h(t)$
$\frac{\pi}{3}$
π
2π
0.4
0.2
t
2
4
6
8
10

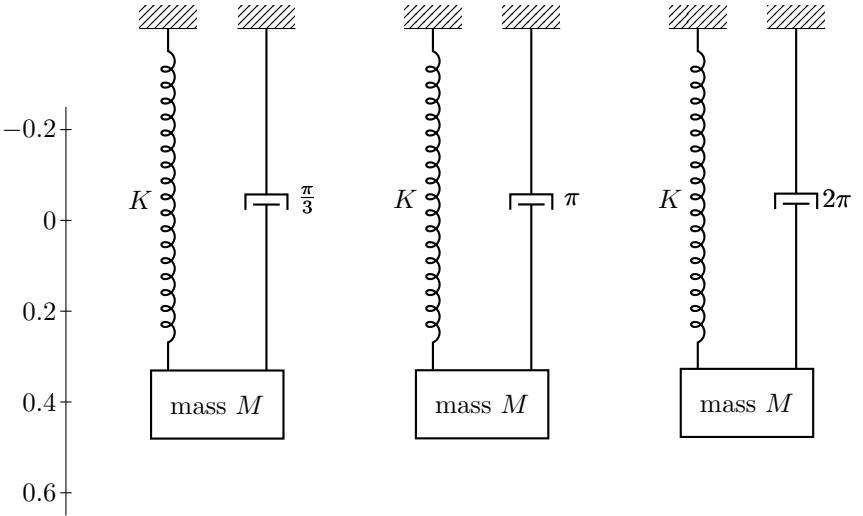
K
$\frac{\pi}{3}$
mass M
K
π
mass M
K
2π
mass M
−0.2
0
0.2
0.4
0.6

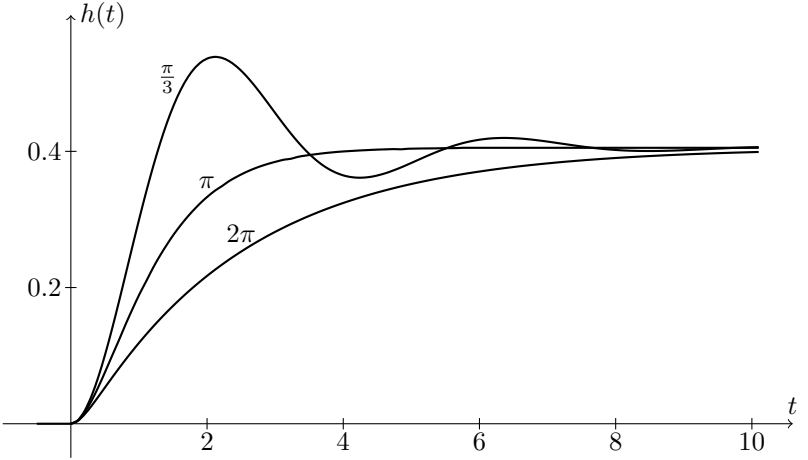
$h(t)$
$\frac{\pi}{3}$
π
2π
0.4
0.2
t
2
4
6
8
10

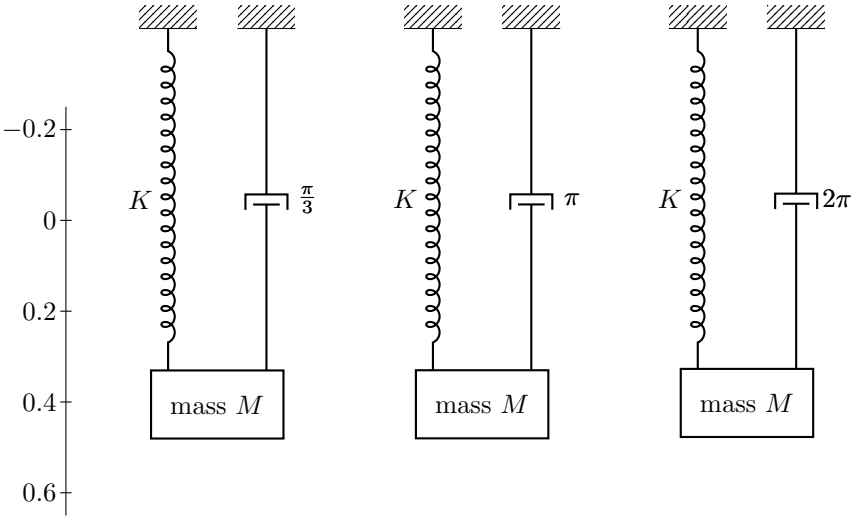
−0.2
0
0.2
0.4
0.6
K
$\frac{\pi}{3}$
mass M
K
π
mass M
K
2π
mass M

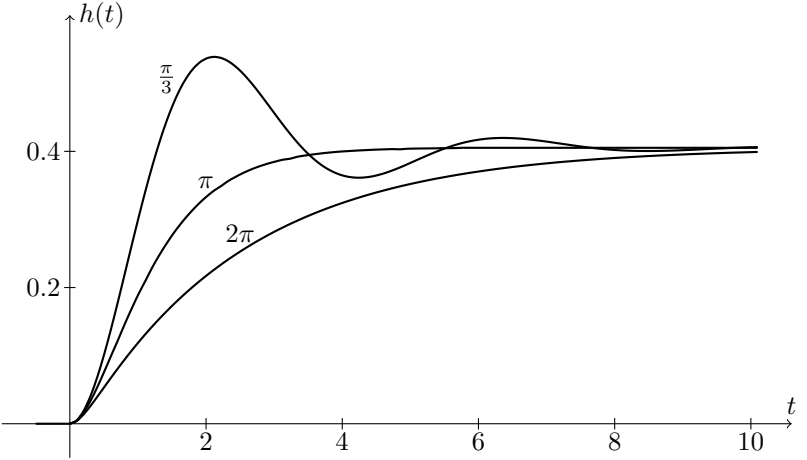
h(t)
π/3
π
2π
0.4
0.2
t
2
4
6
8
10

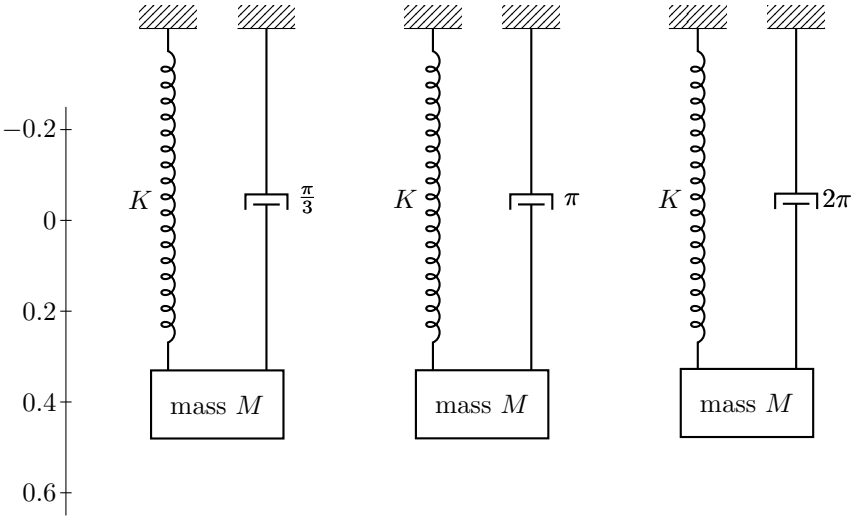
−0.2
0
0.2
0.4
0.6
K
π/3
mass M
K
π
mass M
K
2π
mass M

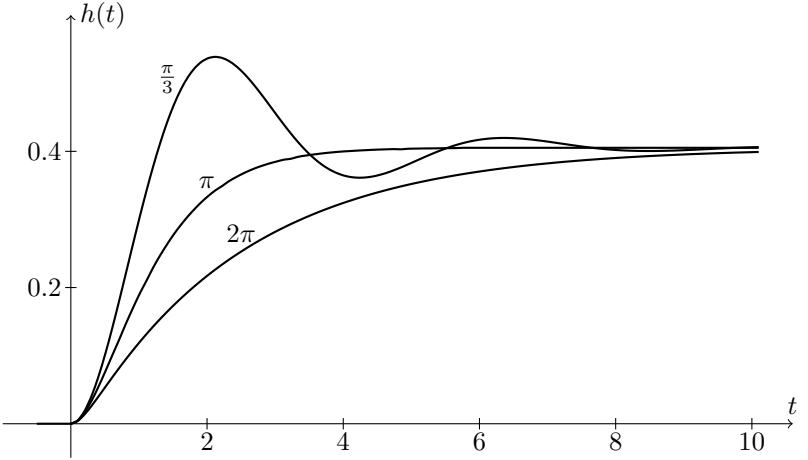
$h(t)$
$\frac{\pi}{3}$
π
2π
0.4
0.2
t
2
4
6
8
10

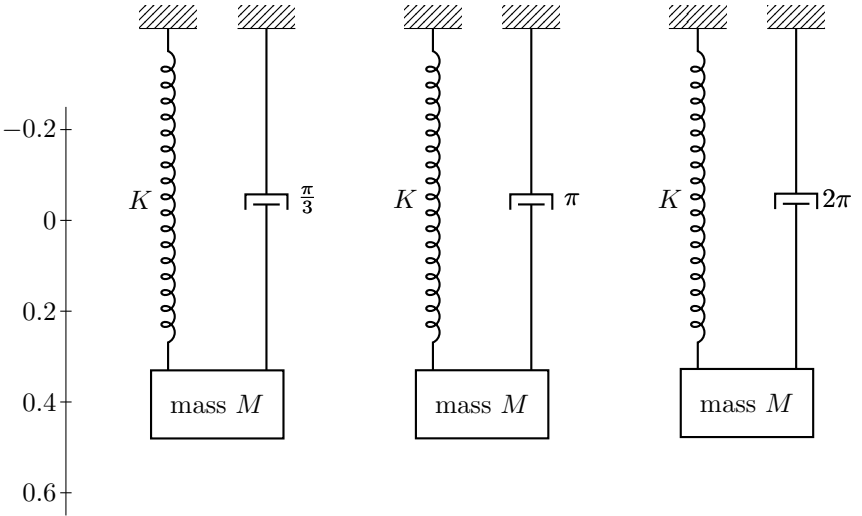
-0.2
0
0.2
0.4
0.6
K
$\frac{\pi}{3}$
mass M
K
π
mass M
K
2π
mass M

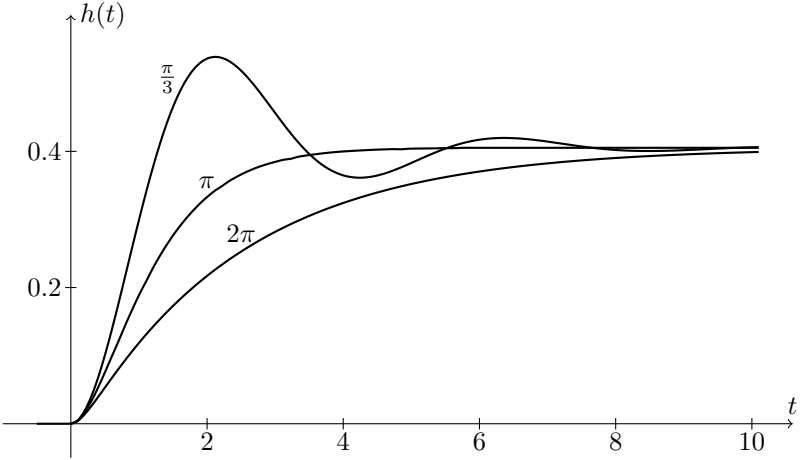
$h(t)$
$\frac{\pi}{3}$
π
2π
0.4
0.2
t
2
4
6
8
10

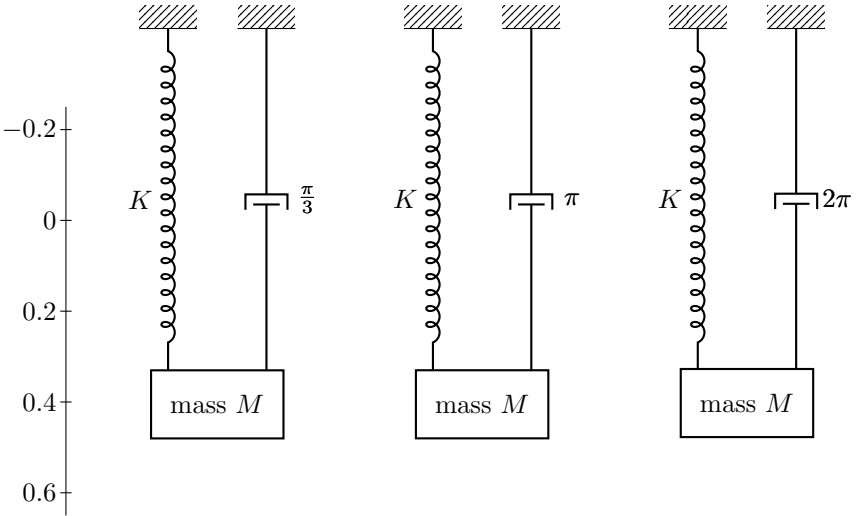
K
$\frac{\pi}{3}$
mass M
K
π
mass M
K
2π
mass M
−0.2
0
0.2
0.4
0.6

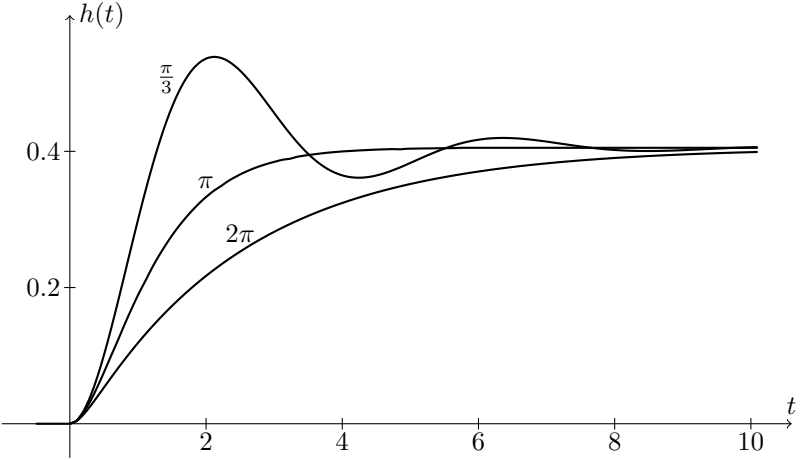
$h(t)$
$\frac{\pi}{3}$
π
2π
0.4
0.2
t
2
4
6
8
10

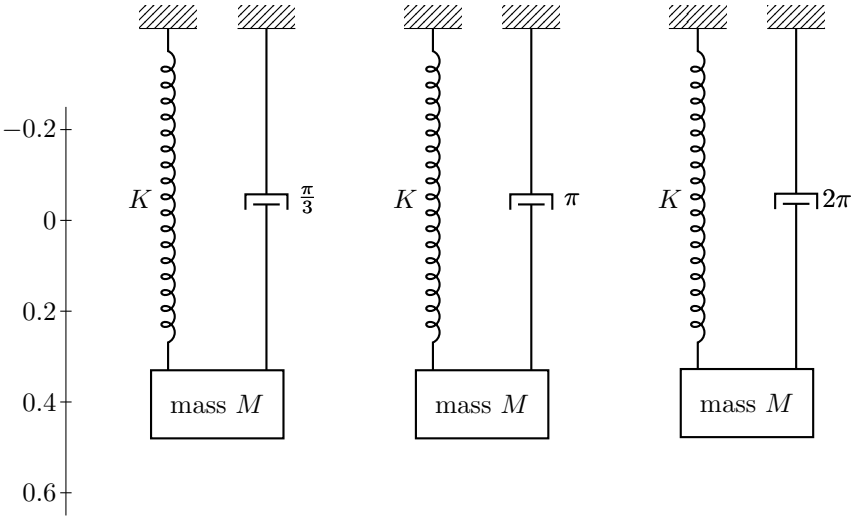
K
$\frac{\pi}{3}$
mass M
K
π
mass M
K
2π
mass M
−0.2
0
0.2
0.4
0.6