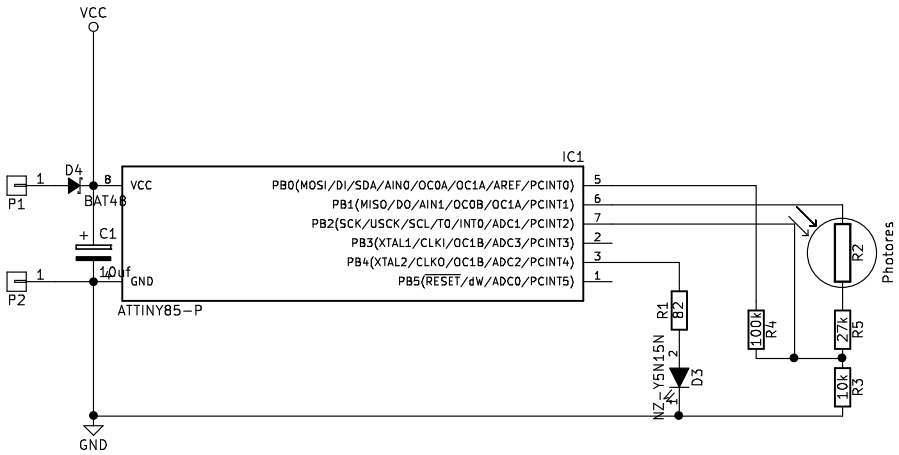

Sheet: /
File: kerze1_pcb.sch

Title:

Size: A4	Date:	**Rev:**
KiCad E.D.A. eeschema 5.0.2+dfsg1-1		Id: 1/1