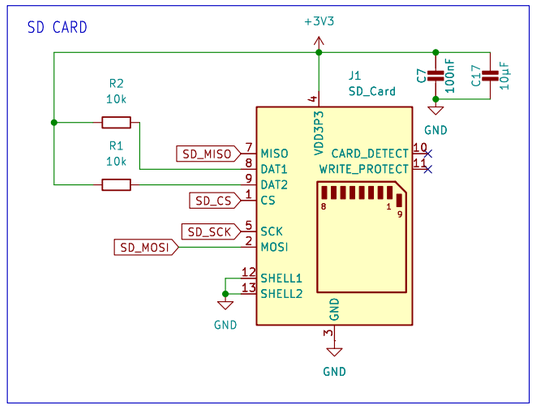

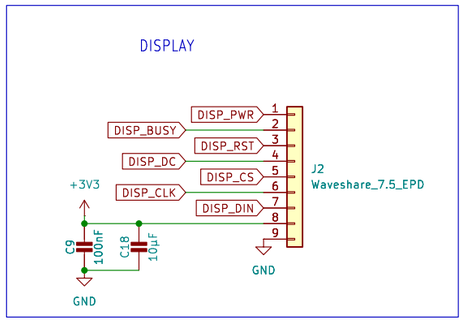

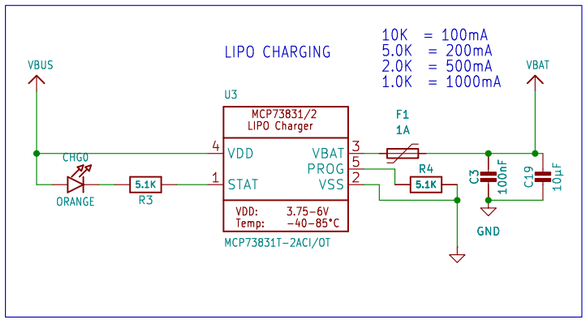

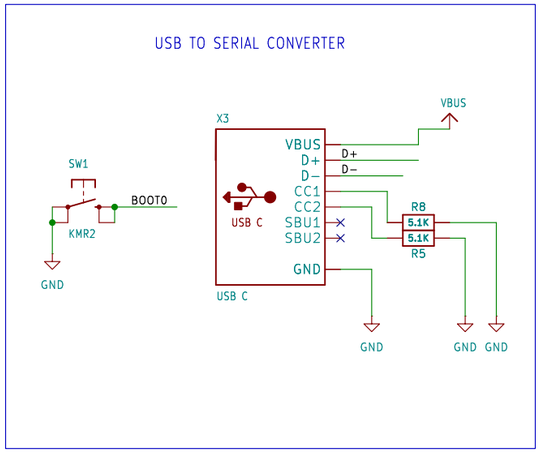

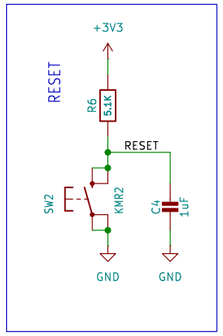

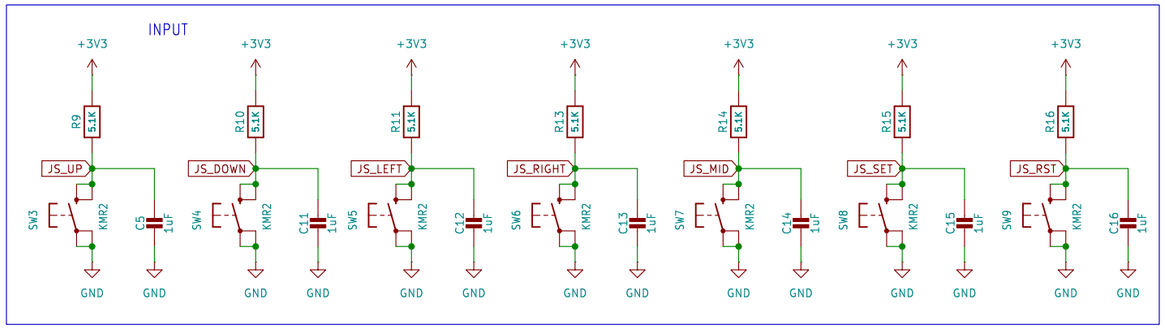

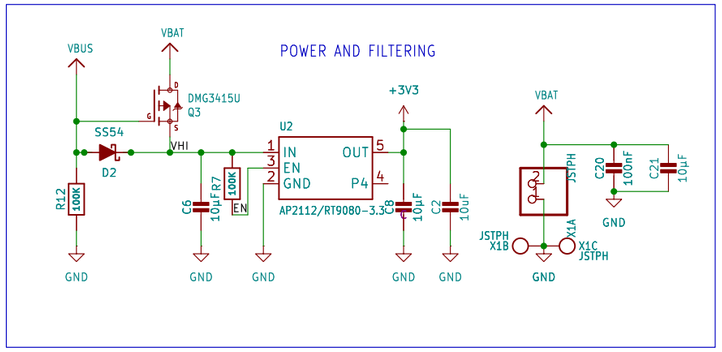

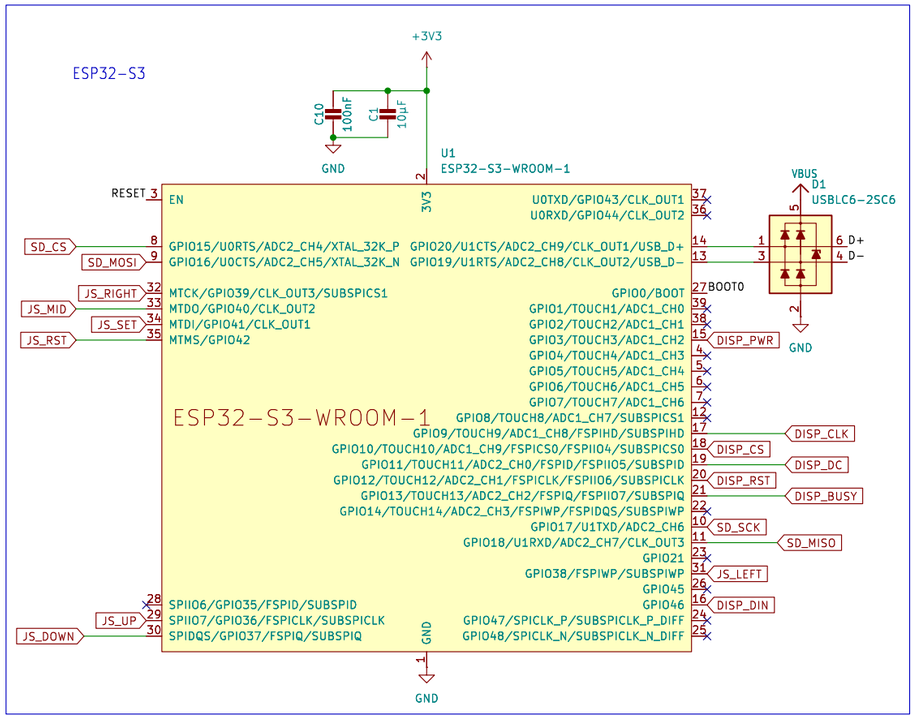

robertengineer.com

Sheet: /

File: e_reader_v0.1.kicad_sch

Title: EReader

Size: A3	Date: 2026-03-08	Rev: 0.1.0
KiCad E.D.A. 9.0.7		Id: 1/1