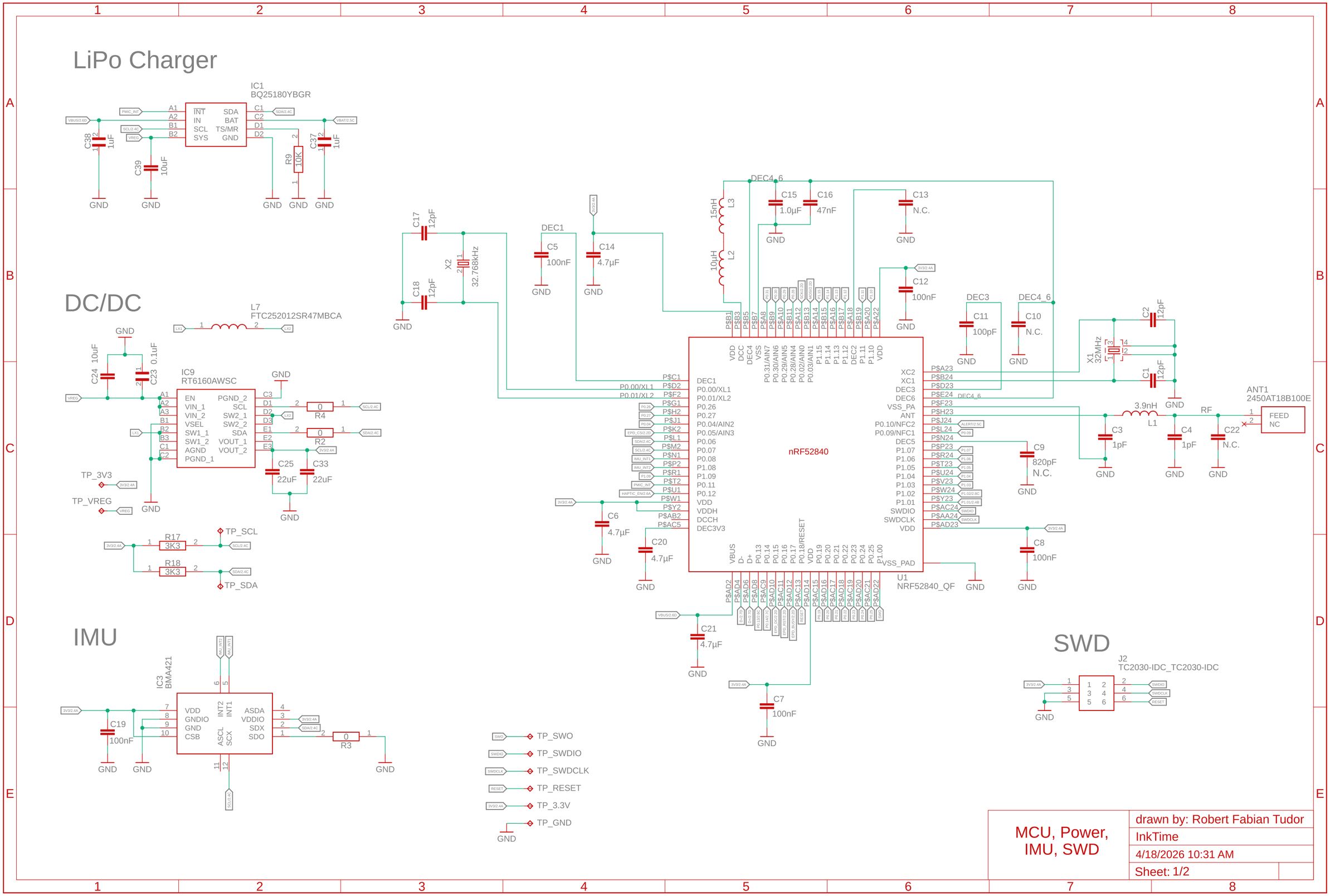

MCU, Power, IMU, SWD

4/18/2026 5:12 PM C:\Users\Robert Fabian Tudor\Downloads\InkTime.pdf (Sheet:)

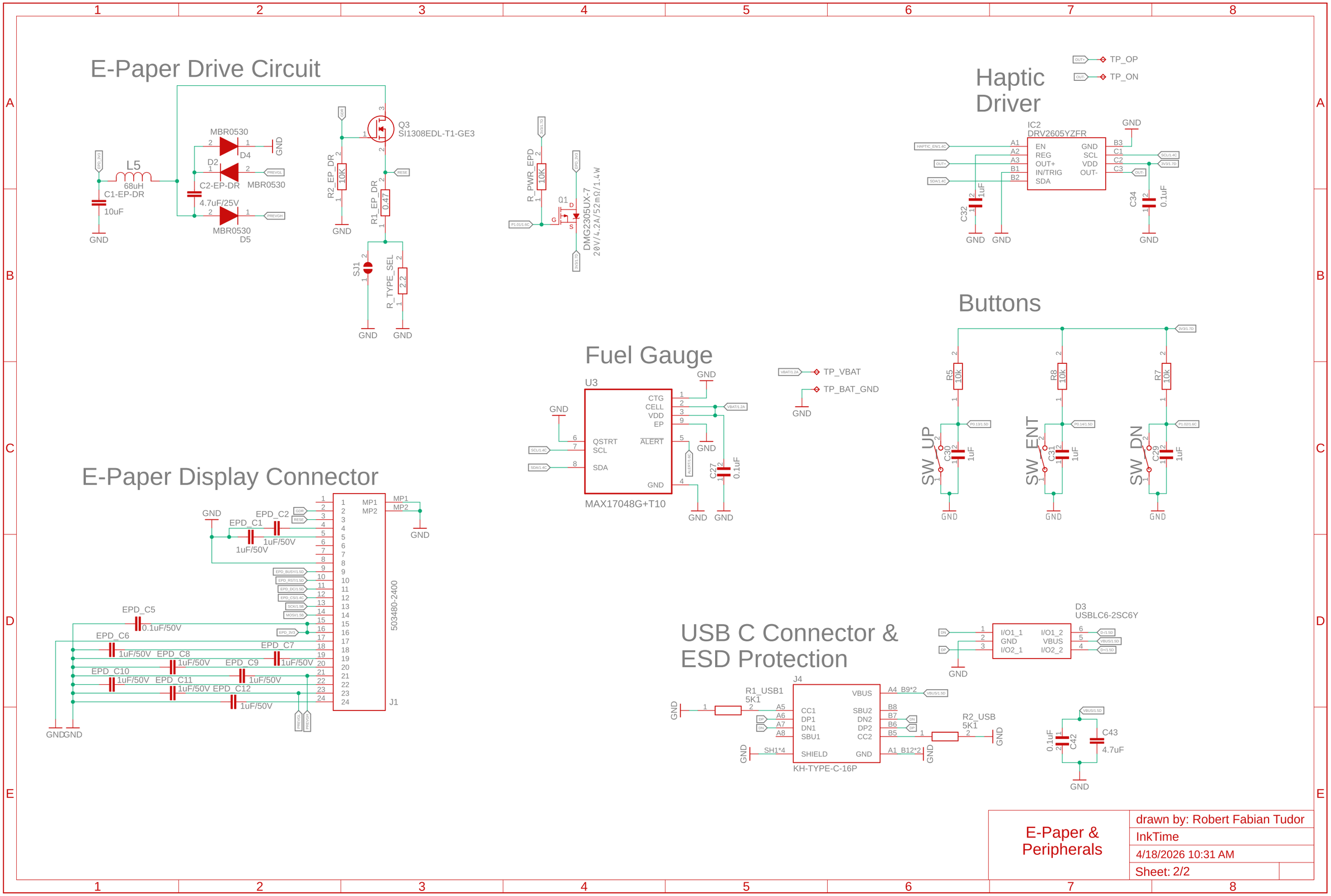

E-Paper & Peripherals	drawn by: Robert Fabian Tudor
	InkTime
	4/18/2026 10:31 AM
	Sheet: 2/2