	This flow is allowed self service
	This flow is not self service, likely needs an error message and routing to Support or sales
	This flow is bought as an additional subscription
	This flow is still under discussion

CS → unsupported flow	This flow will be redirected to Customer Support who will inform the customer that this flow is currently unsupported. Any requests from Enterprise customers will be redirected to Sales
via Customer Support	This flow is not self service but Customer Support can manually transition the customer for this flow
via Sales	Customer will be redirected to a Contact Sales Form and handed off to Sales

Bundle funnel

For customers that begin as Superhuman.com customers and visit the Superhuman Bundle funnel

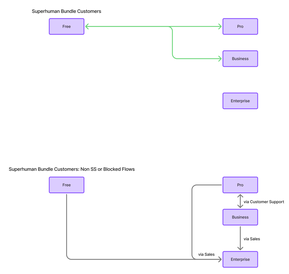

Product Specific funnels

For customers that begin on one of the product funnels and visit the respective product's funnel

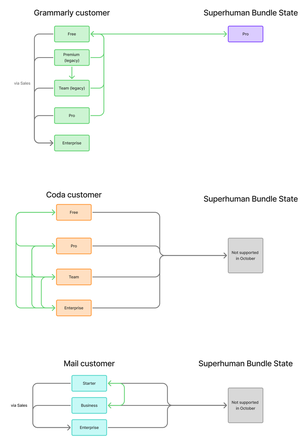

Cross funnels

For customers that begin on one of the product funnels and visit either the bundle funnel or another product's funnel

Grammarly users

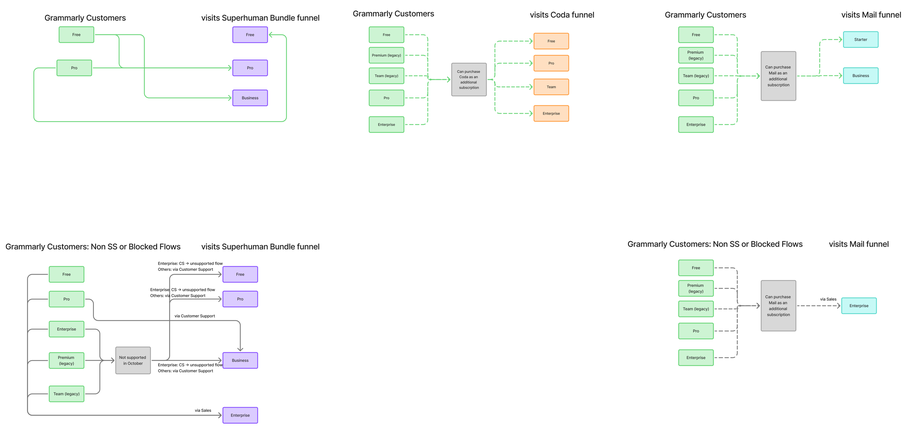

Coda users

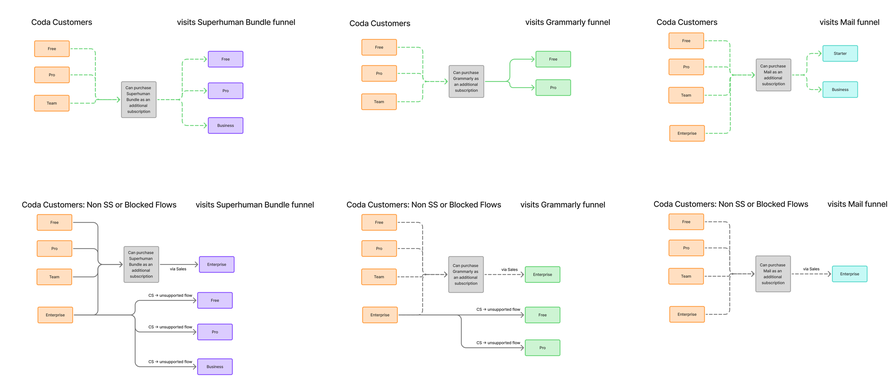

Mail users

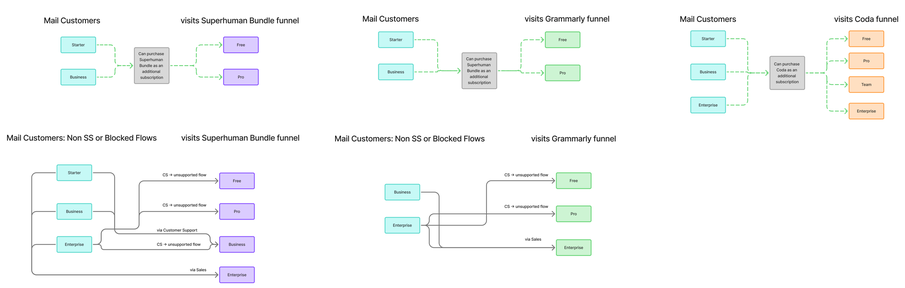
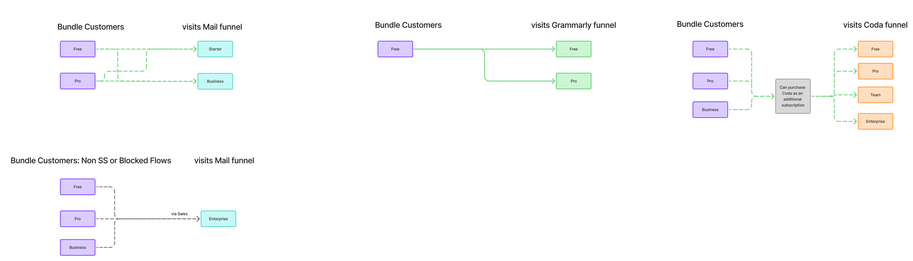
Bundle users