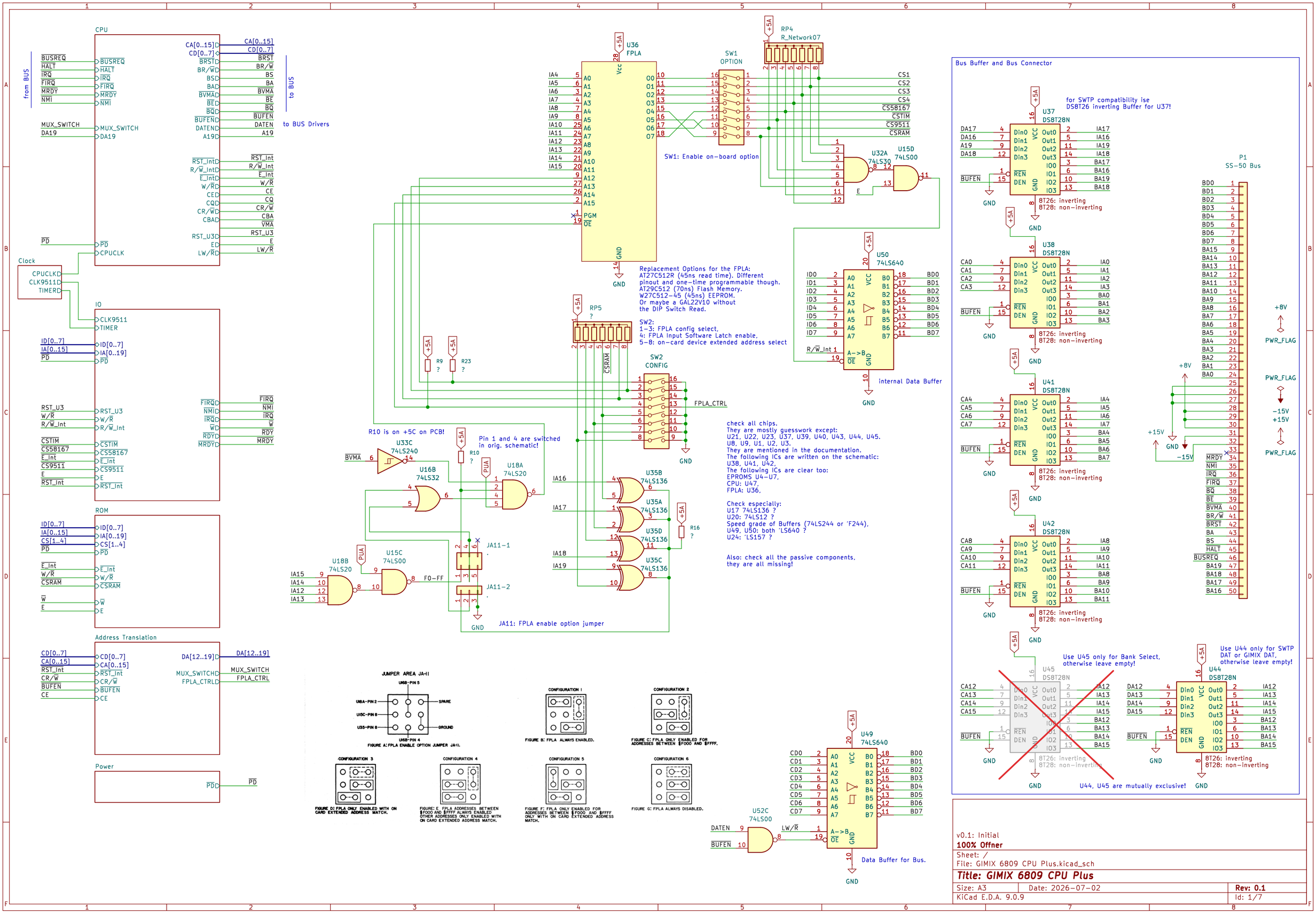

v0.1: Initial

100% Offner

Sheet: /

File: GIMIX 6809 CPU Plus.kicad_sch

Title: GIMIX 6809 CPU Plus

Size: A3	Date: 2026-07-02	Rev: 0.1
KiCad E.D.A. 9.0.9		Id: 1/7

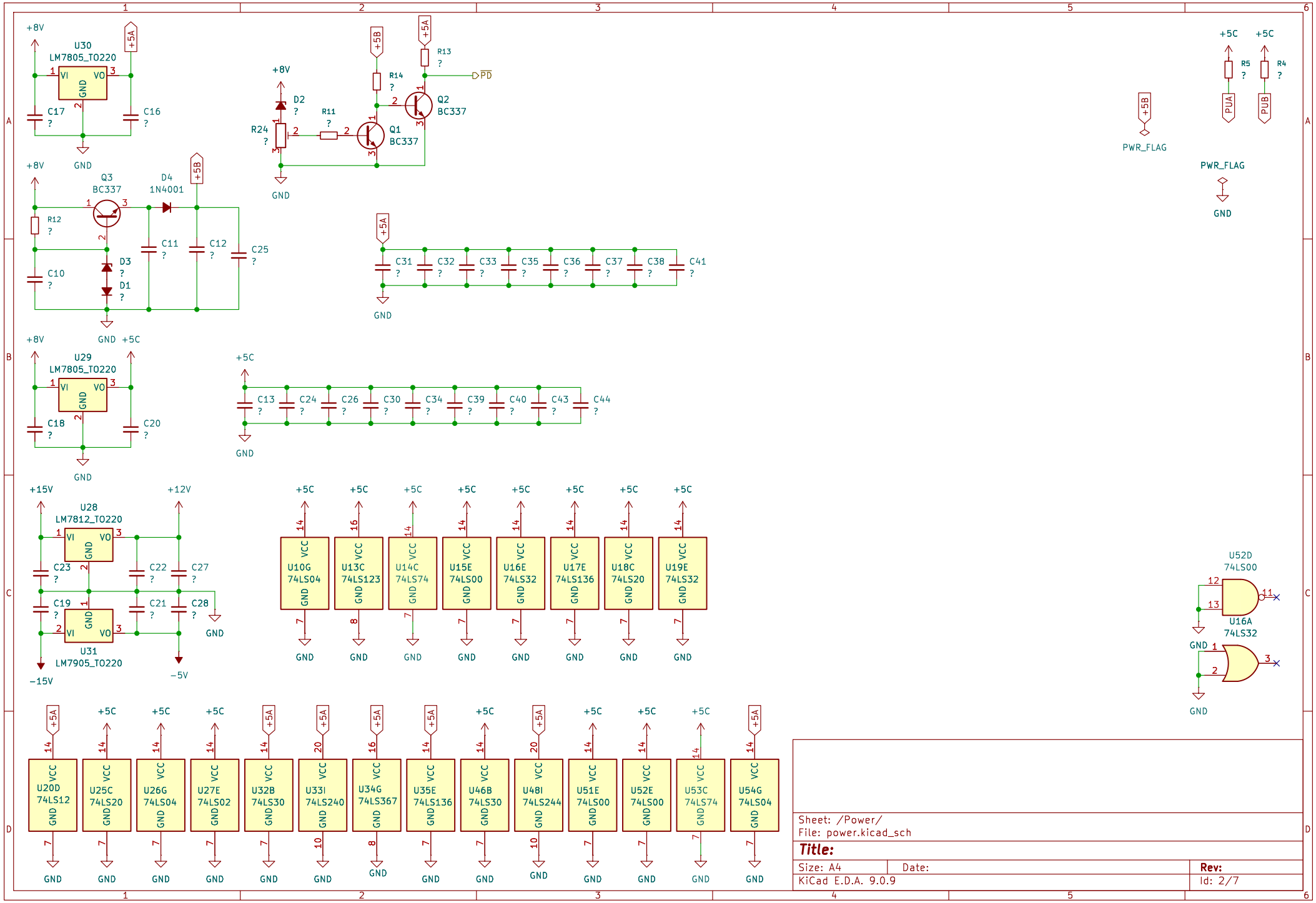

Sheet: /Power/
File: power.kicad_sch

Title:

Size: A4	Date:	Rev:
KiCad E.D.A. 9.0.9		Id: 2/7

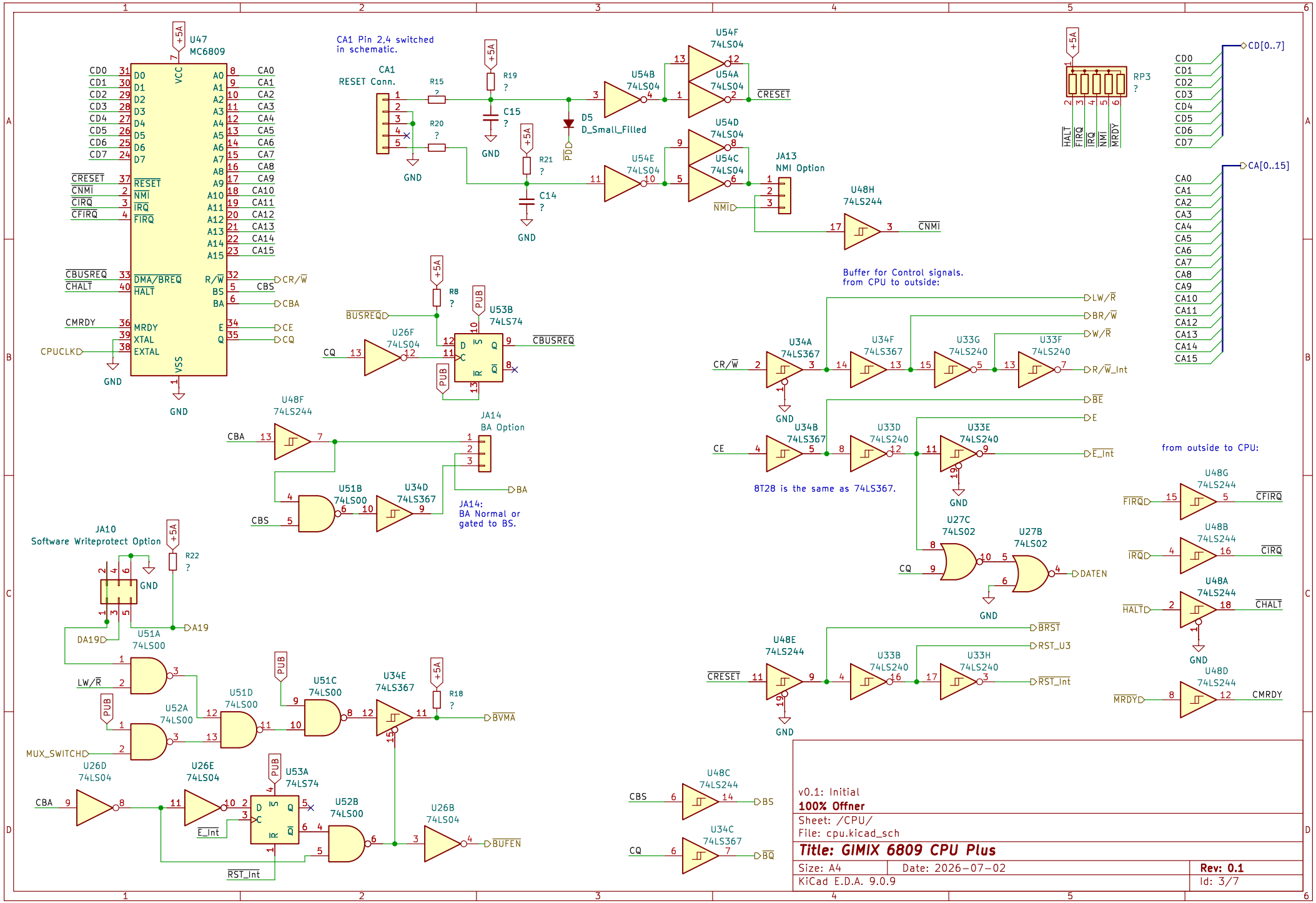
U47
MC6809
CA1 Pin 2,4 switched in schematic.
CA1
RESET Conn.
R15
R20
R19
C15
R21
C14
D5
D_Small_Filled
U54B 74LS04
U54F 74LS04
U54A 74LS04
U54D 74LS04
U54C 74LS04
U54E 74LS04
JA13
NMI Option
U48H 74LS244
RP3
CD[0..7]
CA[0..15]
U26F 74LS04
R8
U53B 74LS74
U48F 74LS244
JA14
BA Option
U51B 74LS00
U34D 74LS367
JA14:
BA Normal or gated to BS.
Buffer for Control signals. from CPU to outside:
U34A 74LS367
U34F 74LS367
U33G 74LS240
U33F 74LS240
U34B 74LS367
U33D 74LS240
U33E 74LS240
8T28 is the same as 74LS367.
U27C 74LS02
U27B 74LS02
from outside to CPU:
U48G 74LS244
U48B 74LS244
U48A 74LS244
U48D 74LS244
JA10
Software Writeprotect Option
R22
U51A 74LS00
U52A 74LS00
U51D 74LS00
U51C 74LS00
U34E 74LS367
R18
U26D 74LS04
U26E 74LS04
U53A 74LS74
U52B 74LS00
U26B 74LS04
U48E 74LS244
U33B 74LS240
U33H 74LS240
U48C 74LS244
U34C 74LS367
v0.1: Initial
100% Offner
Sheet: /CPU/
File: cpu.kicad_sch
Title: GIMIX 6809 CPU Plus
Size: A4
Date: 2026-07-02
Rev: 0.1
KiCad E.D.A. 9.0.9
Id: 3/7

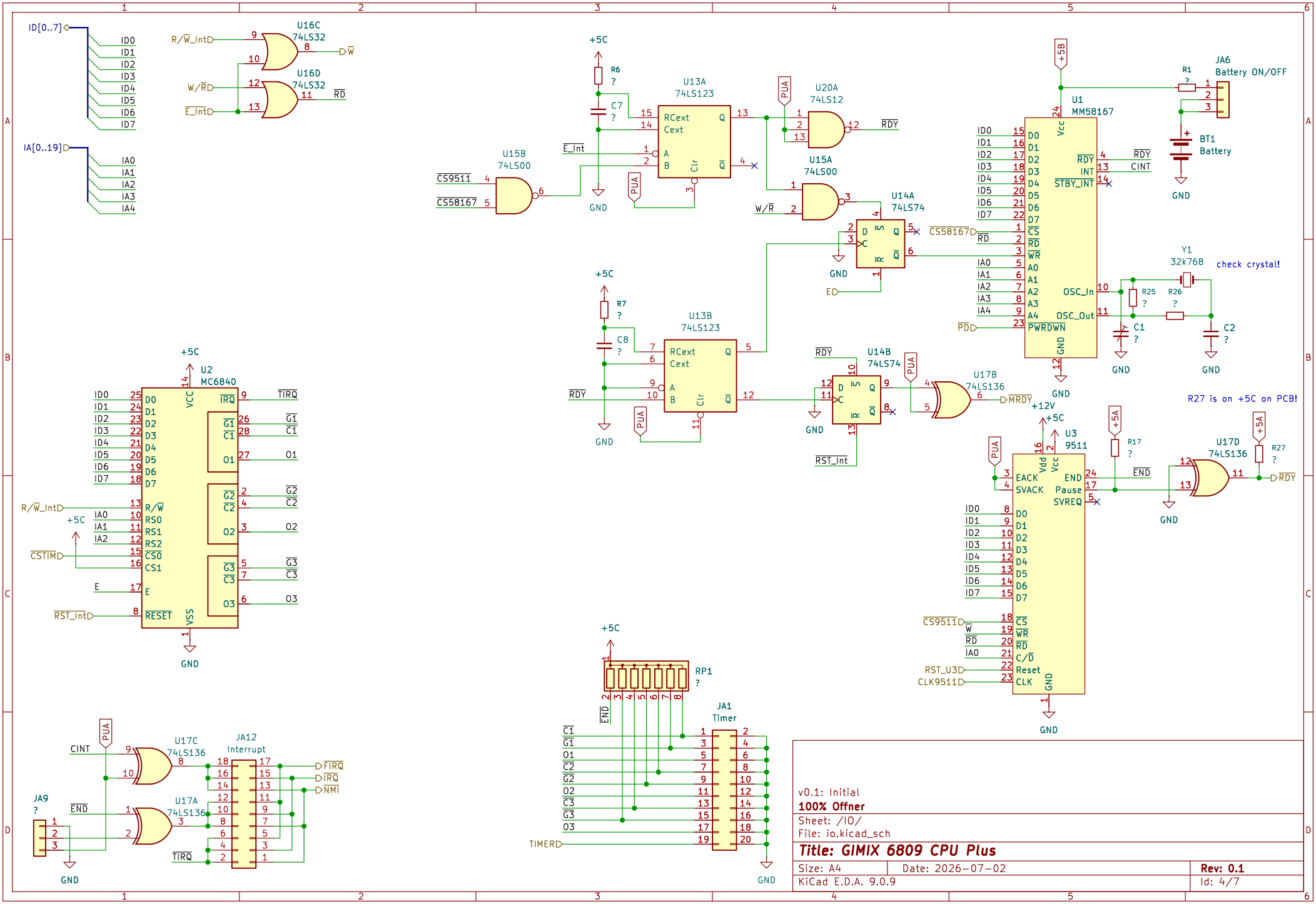

v0.1: Initial

100% Offner

Sheet: /IO/

File: io.kicad_sch

Title: GIMIX 6809 CPU Plus

Size: A4	Date: 2026-07-02	**Rev: 0.1**
KiCad E.D.A. 9.0.9		Id: 4/7

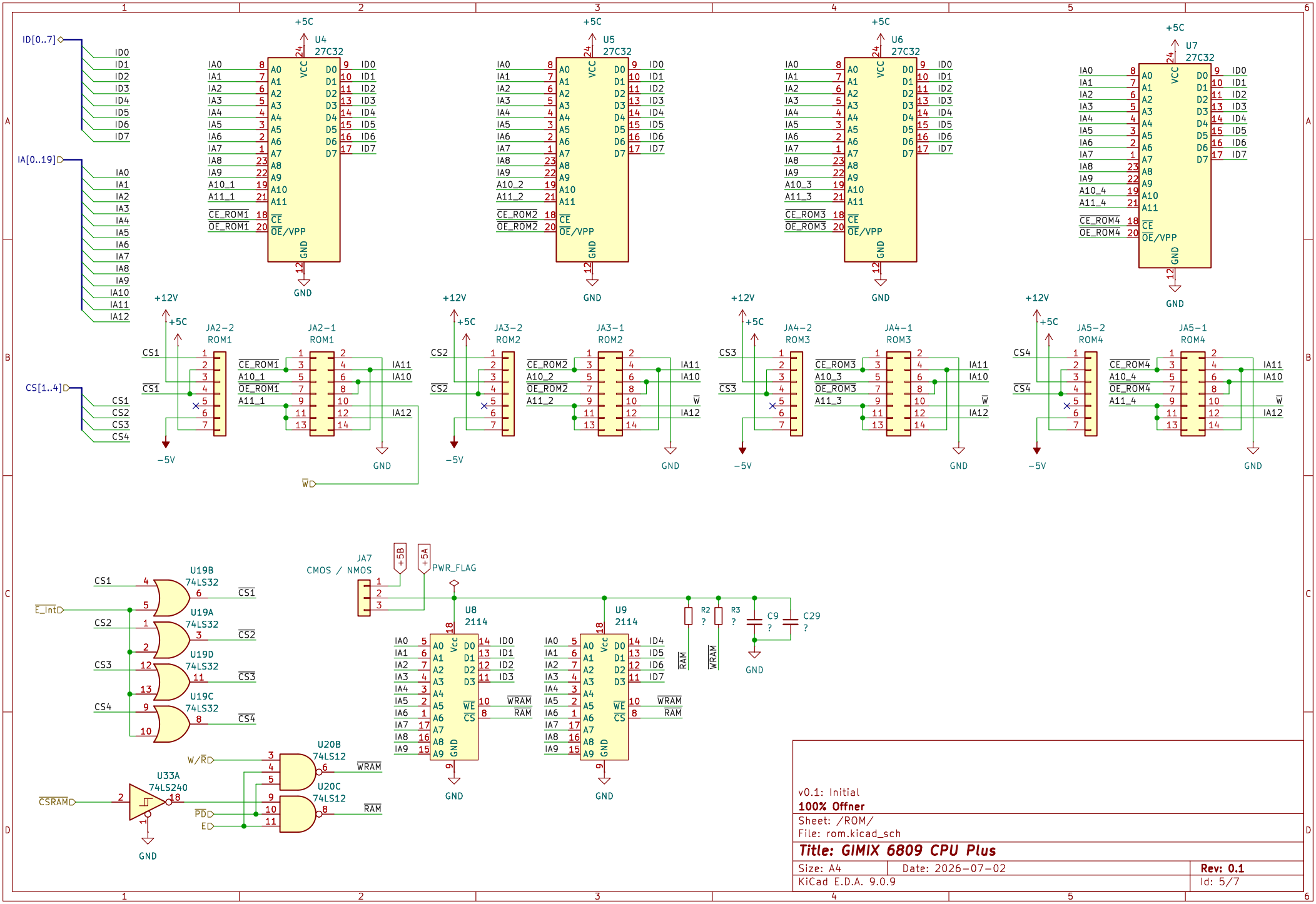

v0.1: Initial

100% Offner

Sheet: /ROM/

File: rom.kicad_sch

Title: GIMIX 6809 CPU Plus

Size: A4	Date: 2026-07-02	**Rev: 0.1**
KiCad E.D.A. 9.0.9		Id: 5/7

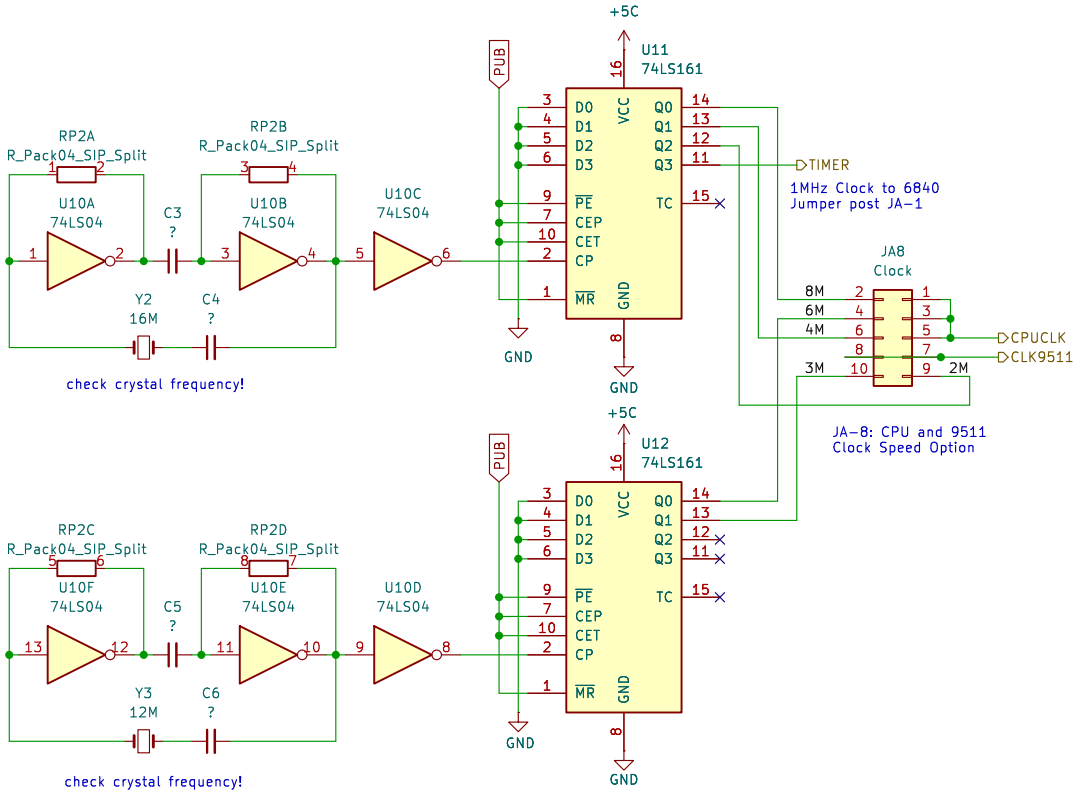

v0.1: Initial

100% Offner

Sheet: /Clock/
File: clock.kicad_sch

Title: GIMIX 6809 CPU Plus

Size: A4	Date: 2026-07-02	**Rev: 0.1**
KiCad E.D.A. 9.0.9		Id: 6/7

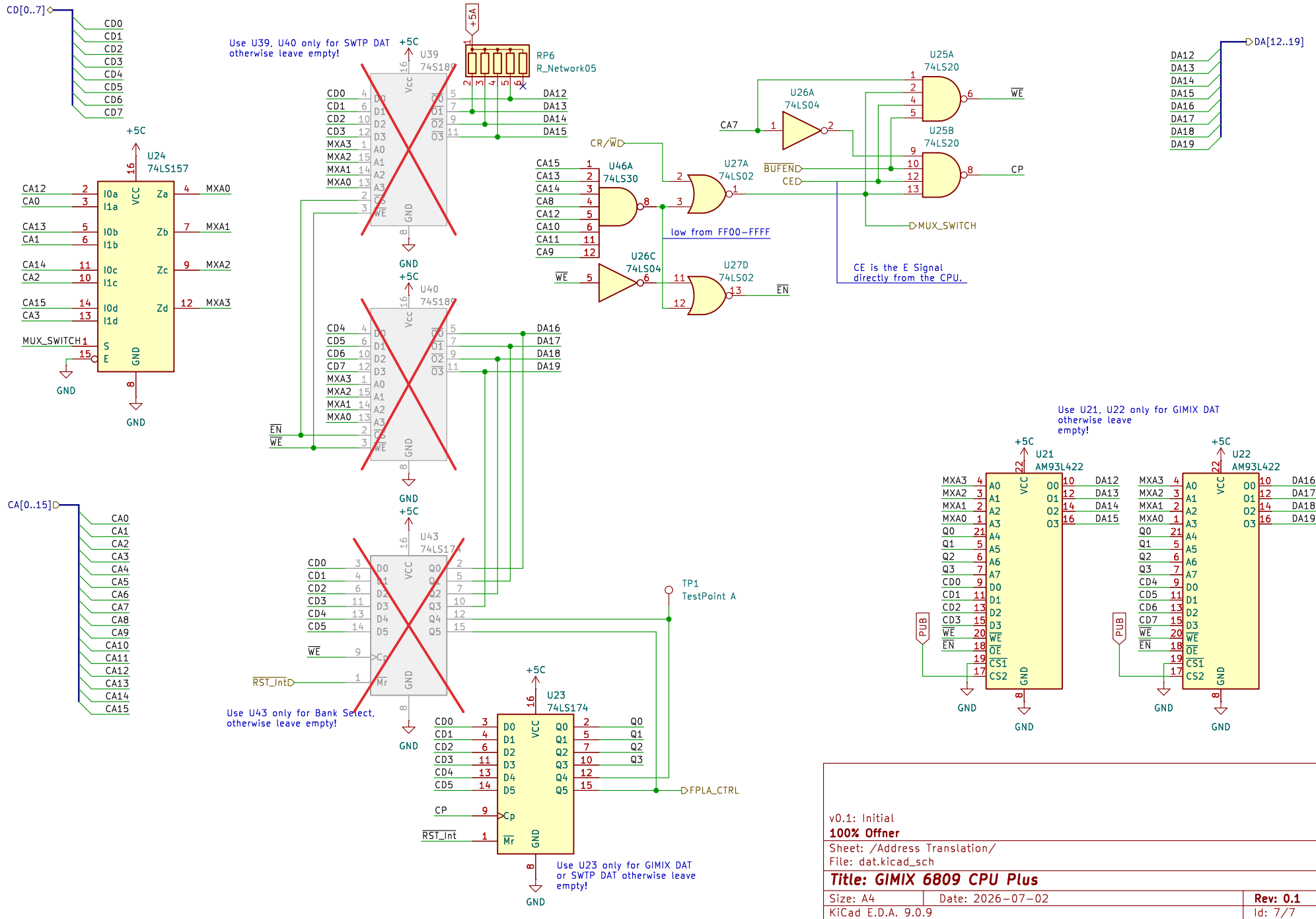

v0.1: Initial

100% Offner

Sheet: /Address Translation/

File: dat.kicad_sch

Title: GIMIX 6809 CPU Plus

Size: A4	Date: 2026-07-02	**Rev: 0.1**
KiCad E.D.A. 9.0.9		Id: 7/7