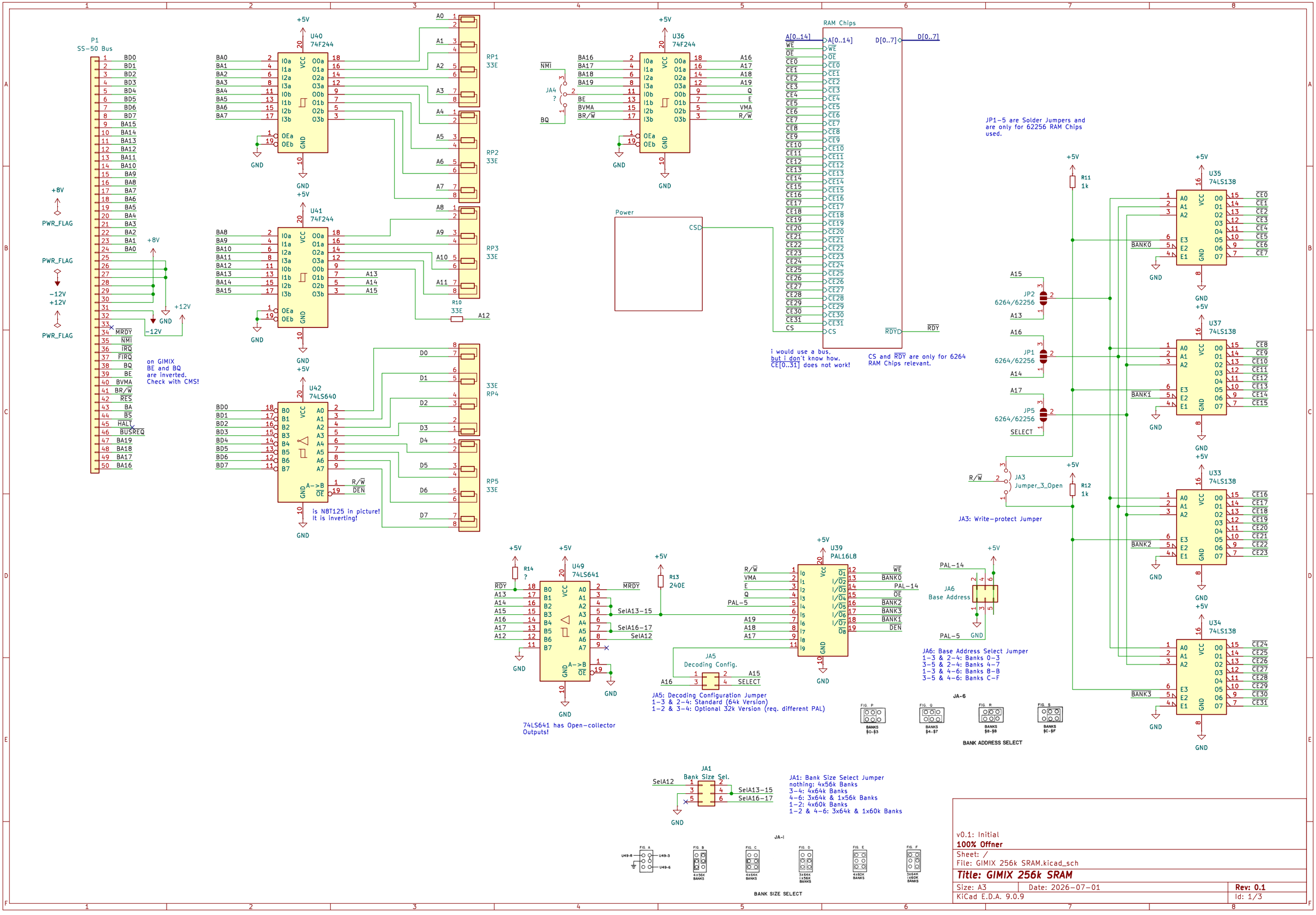

v0.1: Initial

100% Offner

Sheet: /

File: GIMIX 256k SRAM.kicad_sch

Title: GIMIX 256k SRAM

Size: A3	Date: 2026-07-01	**Rev: 0.1**
KiCad E.D.A. 9.0.9		Id: 1/3

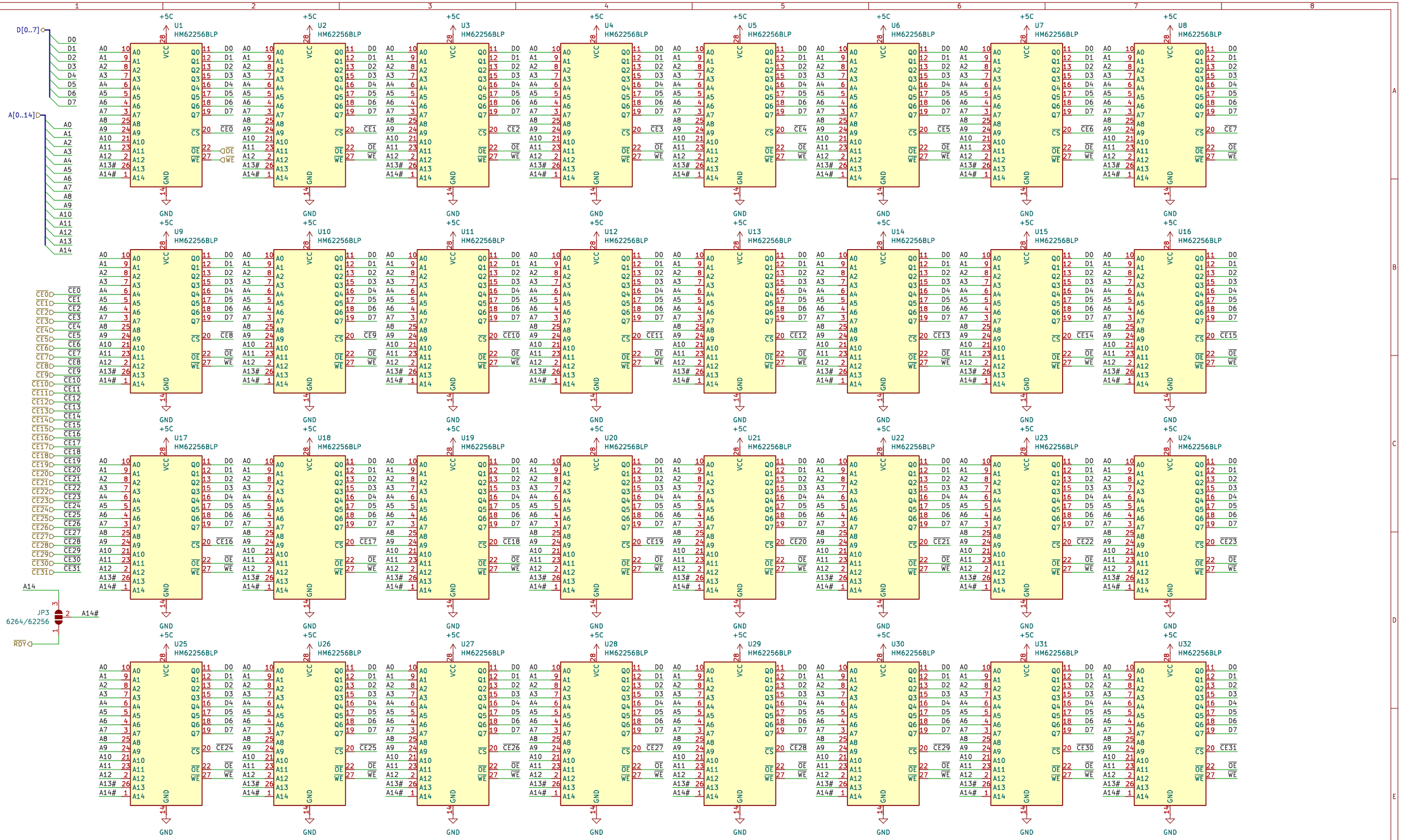

v0.1: Initial

100% Offner

Sheet: /RAM Chips/

File: ram.kicad_sch

Title: GIMIX 256k SRAM

Size: A3	Date: 2026-07-01	**Rev: 0.1**
KiCad E.D.A. 9.0.9		Id: 2/3

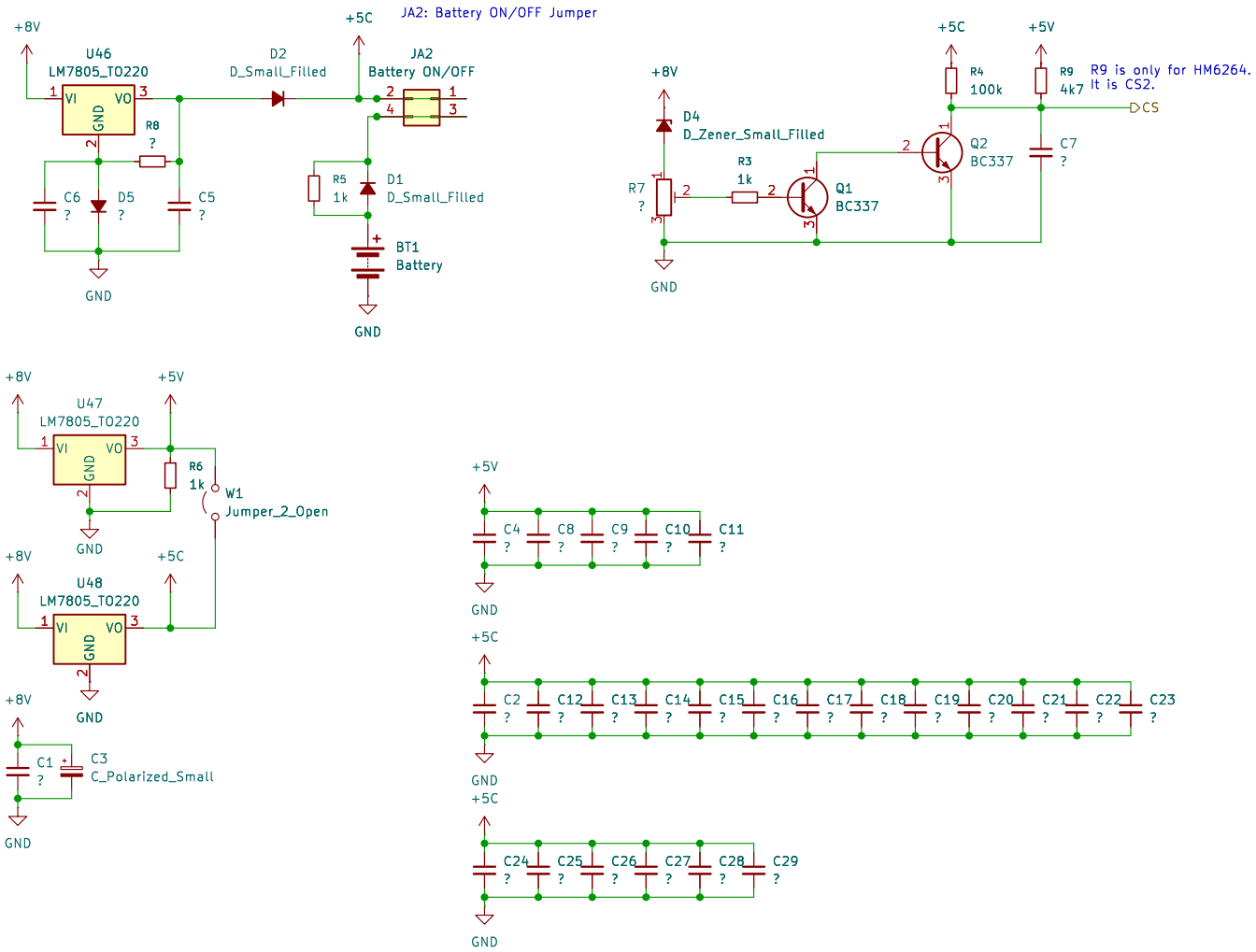

v0.1: Initial

100% Offner

Sheet: /Power/
File: power.kicad_sch

Title: GIMIX 256k SRAM

Size: A4	Date: 2026-07-01	**Rev: 0.1**
KiCad E.D.A. 9.0.9		Id: 3/3