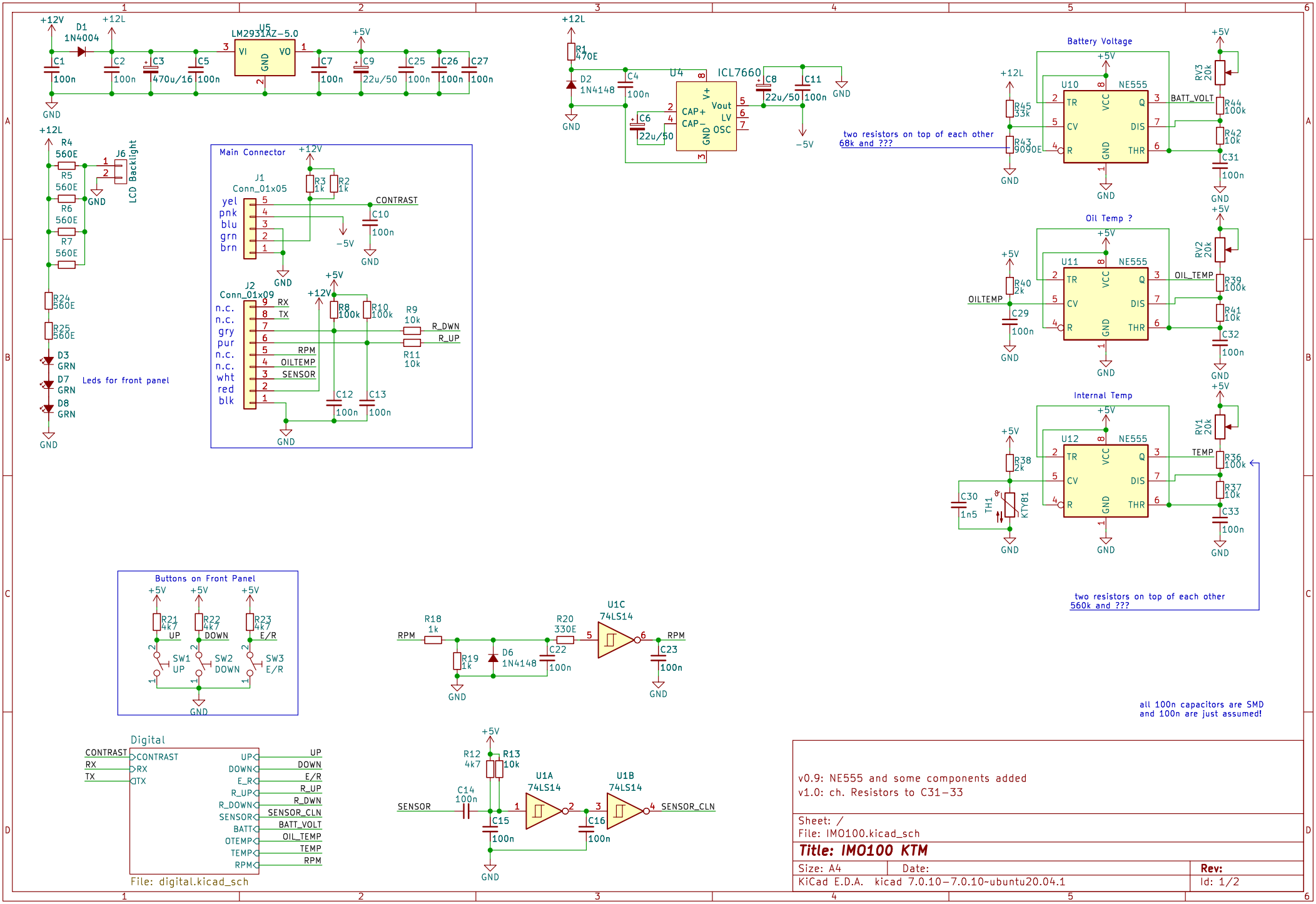
+12V
D1
1N4004
+12L
U5
LM2931AZ-5.0
VI
VO
GND
+5V
C1 100n
C2 100n
C3 470u/16
C5 100n
C7 100n
C9 22u/50
C25 100n
C26 100n
C27 100n
R1 470E
D2 1N4148
C4 100n
U4
ICL7660
V+
CAP+
CAP-
GND
Vout
LV
OSC
C6 22u/50
C8 22u/50
C11 100n
-5V
R4 560E
R5 560E
R6 560E
R7 560E
R24 560E
R25 560E
J6
LCD Backlight
D3 GRN
D7 GRN
D8 GRN
Leds for front panel
Main Connector
J1
Conn_01x05
yel
pnk
blu
grn
brn
R3 1k
R2 1k
CONTRAST
C10 100n
J2
Conn_01x09
n.c.
gry
pur
wht
red
blk
RX
TX
RPM
OILTEMP
SENSOR
R8 100k
R10 100k
R9 10k
R11 10k
R_DWN
R_UP
C12 100n
C13 100n
Battery Voltage
U10
NE555
TR
CV
R
VCC
Q
DIS
THR
R45 33k
R43 9090E
two resistors on top of each other
68k and ???
BATT_VOLT
RV3 20k
R44 100k
R42 10k
C31 100n
Oil Temp ?
U11
OILTEMP
R40 2k
C29 100n
OIL_TEMP
RV2 20k
R39 100k
R41 10k
C32 100n
Internal Temp
U12
R38 2k
C30 1n5
TH1
KTY81
TEMP
RV1 20k
R36 100k
R37 10k
C33 100n
two resistors on top of each other
560k and ???
Buttons on Front Panel
R21 4k7
R22 4k7
R23 4k7
UP
DOWN
E/R
SW1 UP
SW2 DOWN
SW3 E/R
R18 1k
R19 1k
D6 1N4148
R20 330E
C22 100n
U1C
74LS14
C23 100n
Digital
CONTRAST
RX
TX
UP
DOWN
E_R
R_UP
R_DWN
SENSOR
BATT
OTEMP
TEMP
RPM
SENSOR_CLN
BATT_VOLT
OIL_TEMP
File: digital.kicad_sch
R12 4k7
R13 10k
C14 100n
C15 100n
U1A
74LS14
U1B
74LS14
C16 100n
all 100n capacitors are SMD
and 100n are just assumed!
v0.9: NE555 and some components added
v1.0: ch. Resistors to C31-33
Sheet: /
File: IMO100.kicad_sch
Title: IMO100 KTM
Size: A4
Date:
Rev:
KiCad E.D.A. kicad 7.0.10-7.0.10~ubuntu20.04.1
Id: 1/2

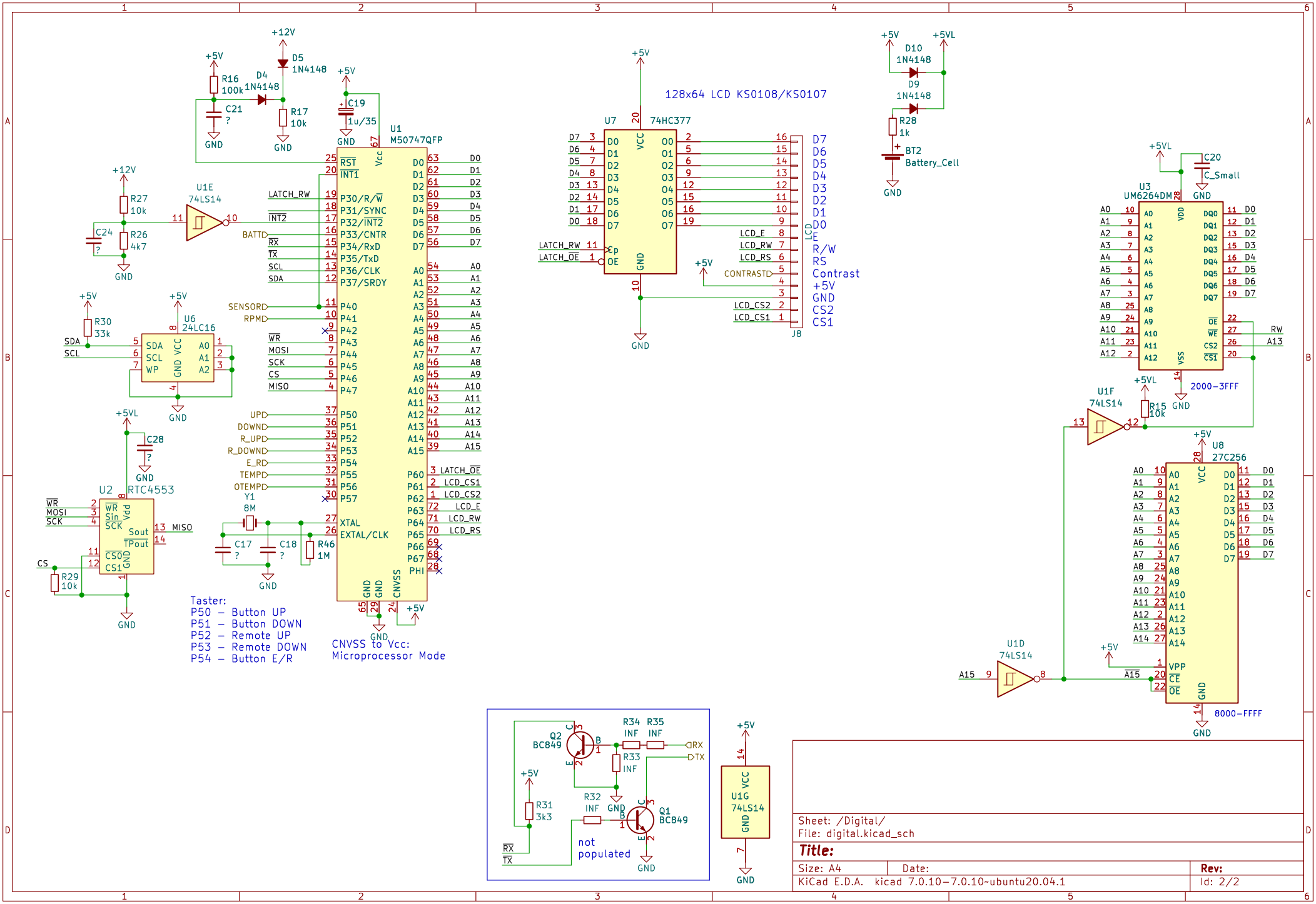
128x64 LCD KS0108/KS0107
U1 M50747QFP
U7 74HC377
J8
U3 UM6264DM
2000-3FFF
U8 27C256
8000-FFFF
U2 RTC4553
U6 24LC16
U1E 74LS14
U1F 74LS14
U1D 74LS14
U1G 74LS14
Q1 BC849
Q2 BC849
BT2 Battery_Cell
Taster:
P50 – Button UP
P51 – Button DOWN
P52 – Remote UP
P53 – Remote DOWN
P54 – Button E/R
CNVSS to Vcc:
Microprocessor Mode
not populated
Sheet: /Digital/
File: digital.kicad_sch
Title:
Size: A4
Date:
Rev:
KiCad E.D.A. kicad 7.0.10-7.0.10~ubuntu20.04.1
Id: 2/2