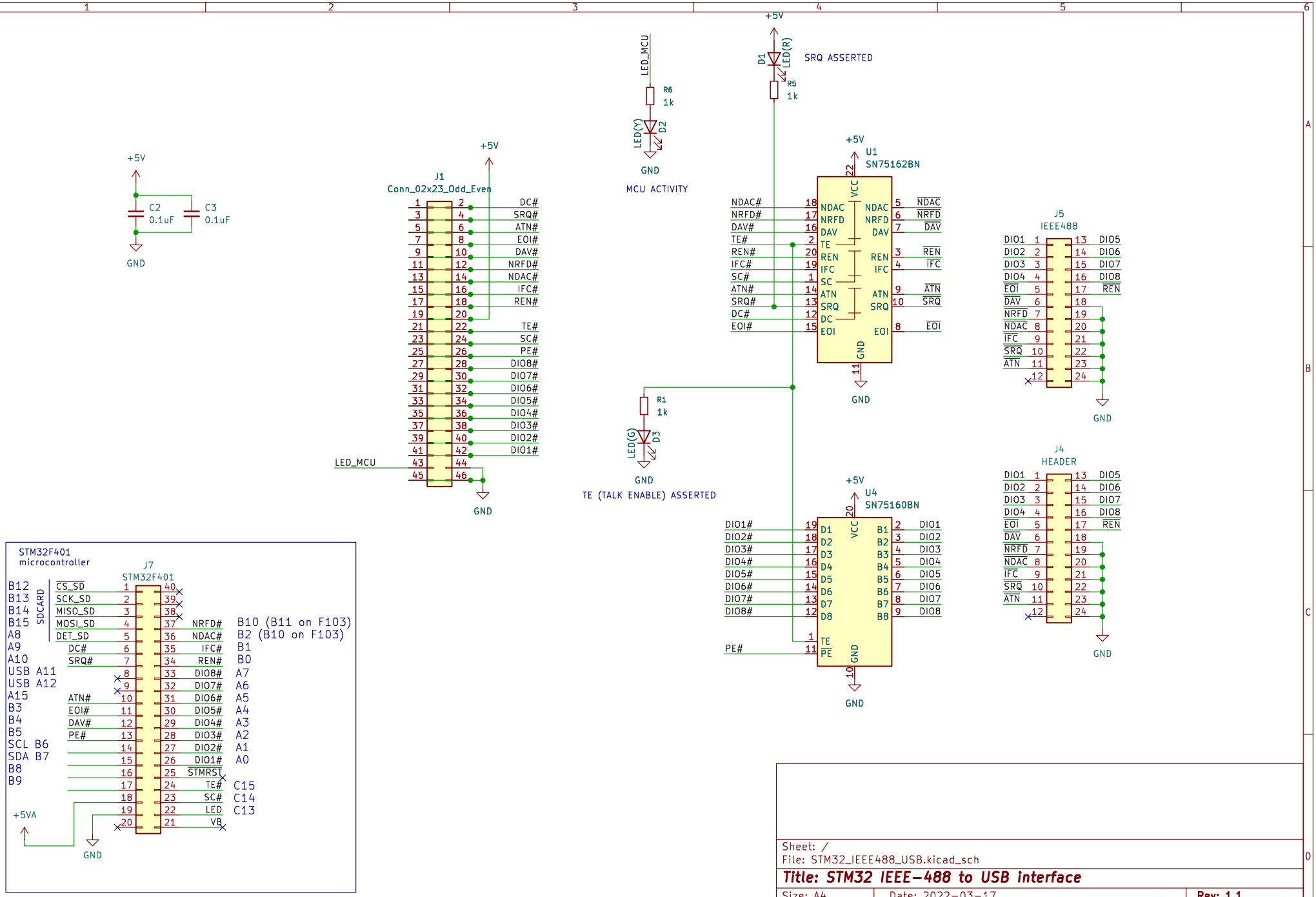

Sheet: /
File: STM32_IEEE488_USB.kicad_sch

Title: STM32 IEEE-488 to USB interface

Size: A4	Date: 2022-03-17	Rev: 1.1
KiCad E.D.A. 9.0.7		Id: 1/1