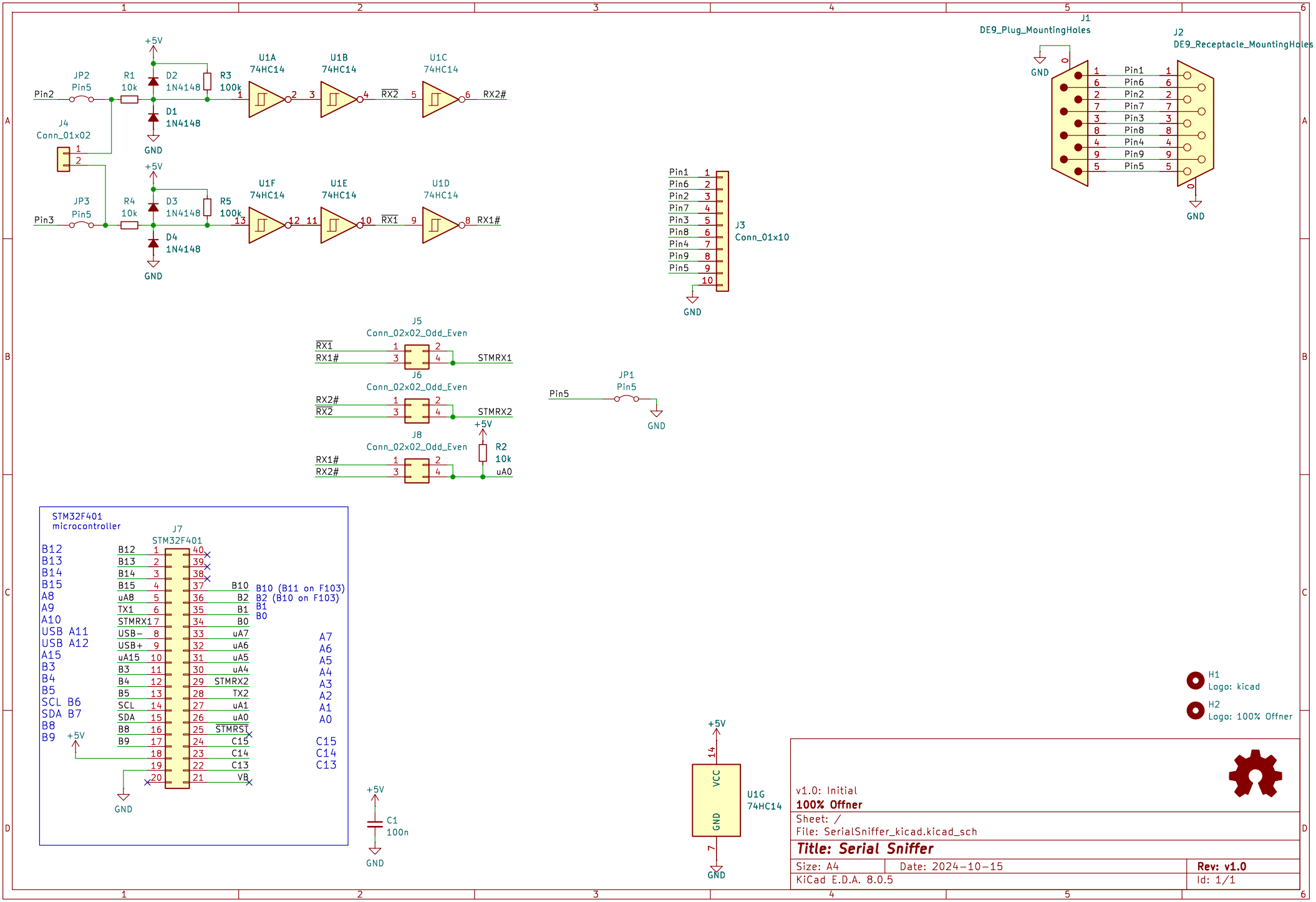
J1
DE9_Plug_MountingHoles
J2
DE9_Receptacle_MountingHoles
GND
Pin1
Pin6
Pin2
Pin7
Pin3
Pin8
Pin4
Pin9
Pin5
+5V
JP2
Pin5
R1
10k
D2
1N4148
R3
100k
D1
1N4148
U1A
74HC14
U1B
74HC14
U1C
74HC14
RX2
RX2#
Pin2
J4
Conn_01x02
JP3
Pin5
R4
10k
D3
1N4148
R5
100k
D4
1N4148
U1F
74HC14
U1E
74HC14
U1D
74HC14
RX1
RX1#
Pin3
J3
Conn_01x10
J5
Conn_02x02_Odd_Even
STMRX1
J6
Conn_02x02_Odd_Even
STMRX2
J8
Conn_02x02_Odd_Even
R2
10k
uA0
JP1
Pin5
STM32F401
microcontroller
J7
STM32F401
B12
B13
B14
B15
A8
A9
A10
USB A11
USB A12
A15
B3
B4
B5
SCL B6
SDA B7
B8
B9
B10 (B11 on F103)
B2 (B10 on F103)
B1
B0
A7
A6
A5
A4
A3
A2
A1
A0
C15
C14
C13
TX1
STMRX1
USB−
USB+
uA15
SDA
STMRST
TX2
uA1
uA0
VB
C1
100n
U1G
74HC14
VCC
H1
Logo: kicad
H2
Logo: 100% Offner
v1.0: Initial
100% Offner
Sheet: /
File: SerialSniffer_kicad.kicad_sch
Title: Serial Sniffer
Size: A4
Date: 2024-10-15
Rev: v1.0
KiCad E.D.A. 8.0.5
Id: 1/1