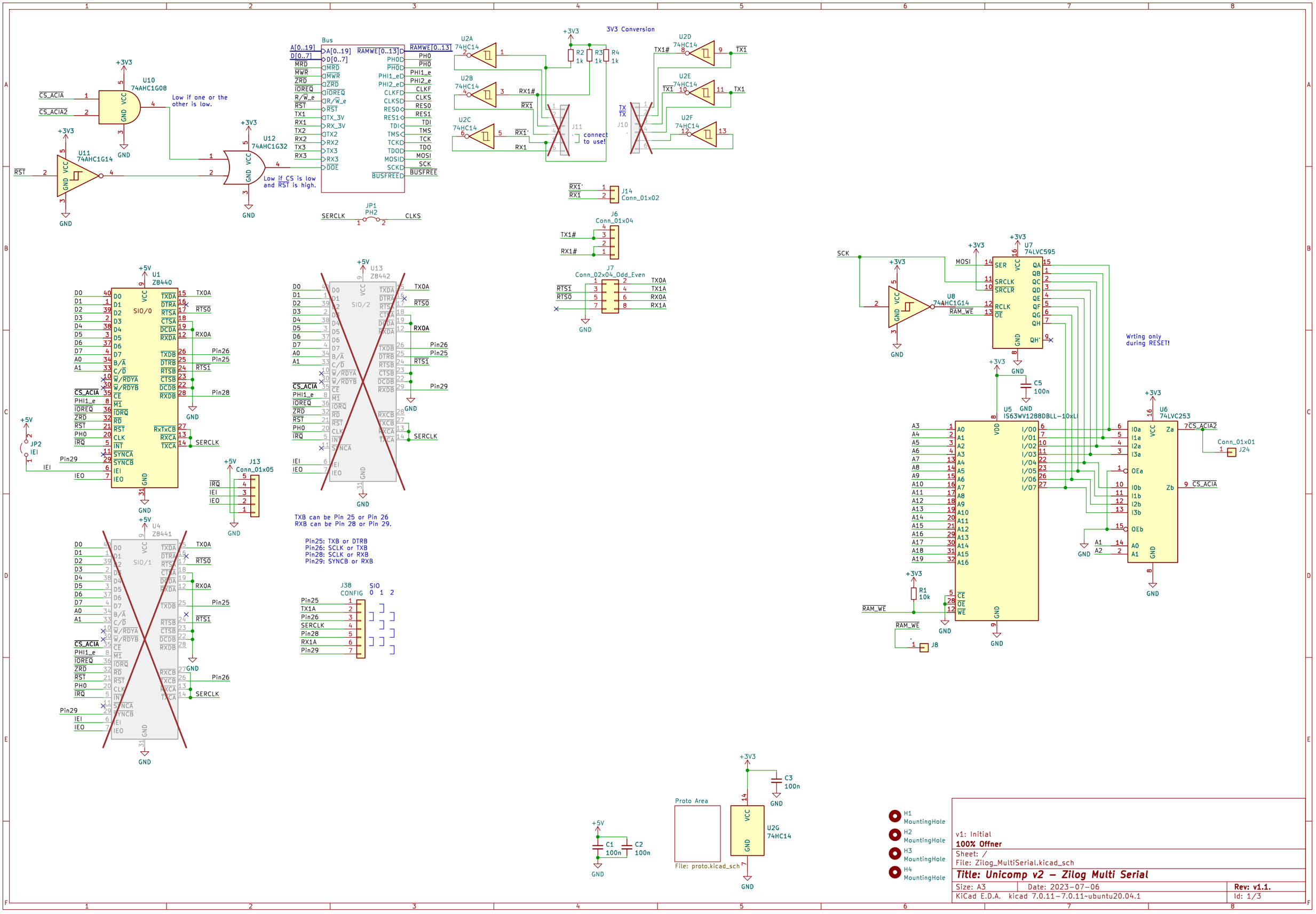

v1: Initial

100% Offner

Sheet: /

File: Zilog_MultiSerial.kicad_sch

Title: Unicomp v2 – Zilog Multi Serial

Size: A3	Date: 2023-07-06	**Rev: v1.1.**
KiCad E.D.A. kicad 7.0.11-7.0.11~ubuntu20.04.1		Id: 1/3

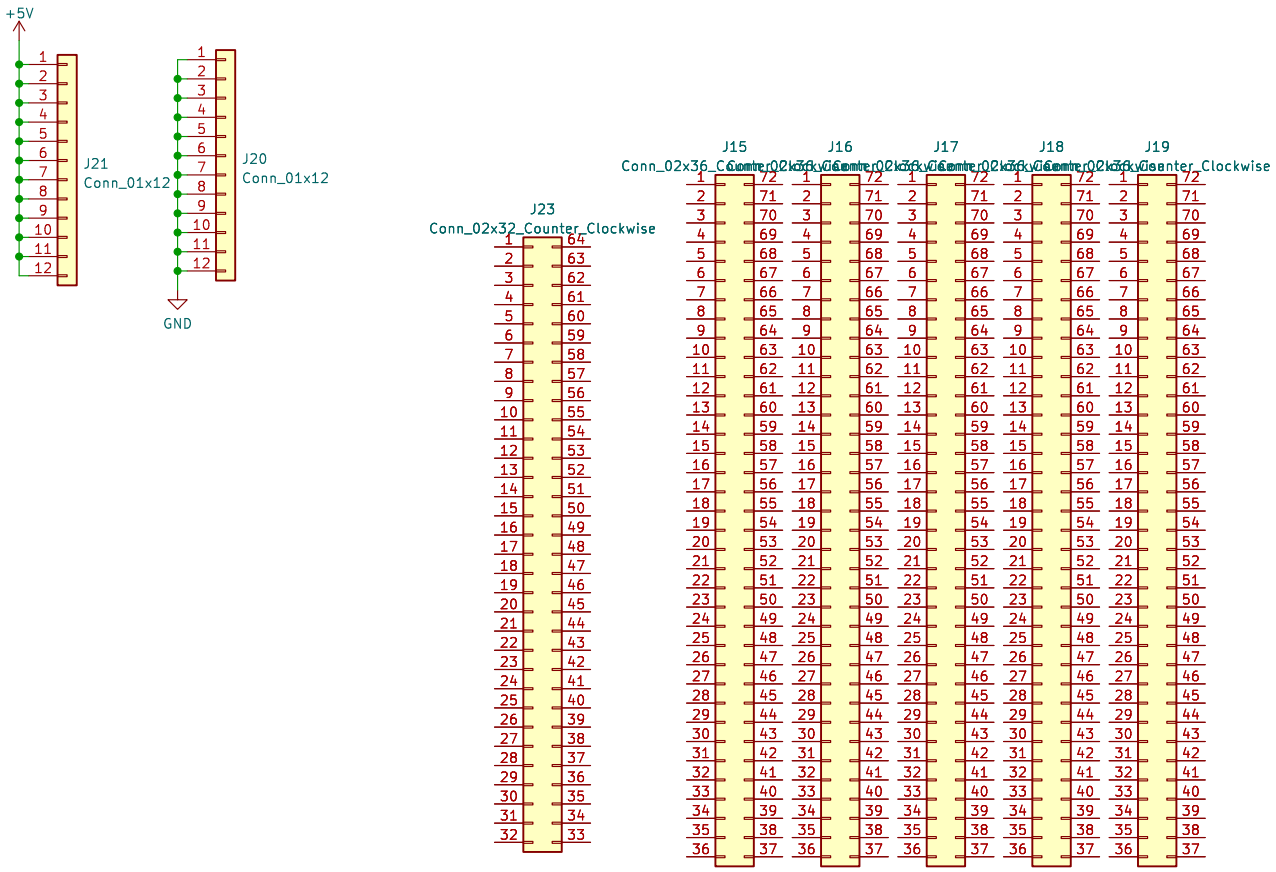

v1.1: $\overline{\text{DOE}}$ is now $\overline{\text{CS_ACIA}}$ and $\overline{\text{CS_ACIA2}}$
v1: Initial
100% Offner

Sheet: /Proto Area/
File: proto.kicad_sch

Title: Unicomp v2 – empty Board

Size: A4	Date: 2023-07-06	**Rev: v1.1.**
KiCad E.D.A. kicad 7.0.11-7.0.11~ubuntu20.04.1		Id: 2/3

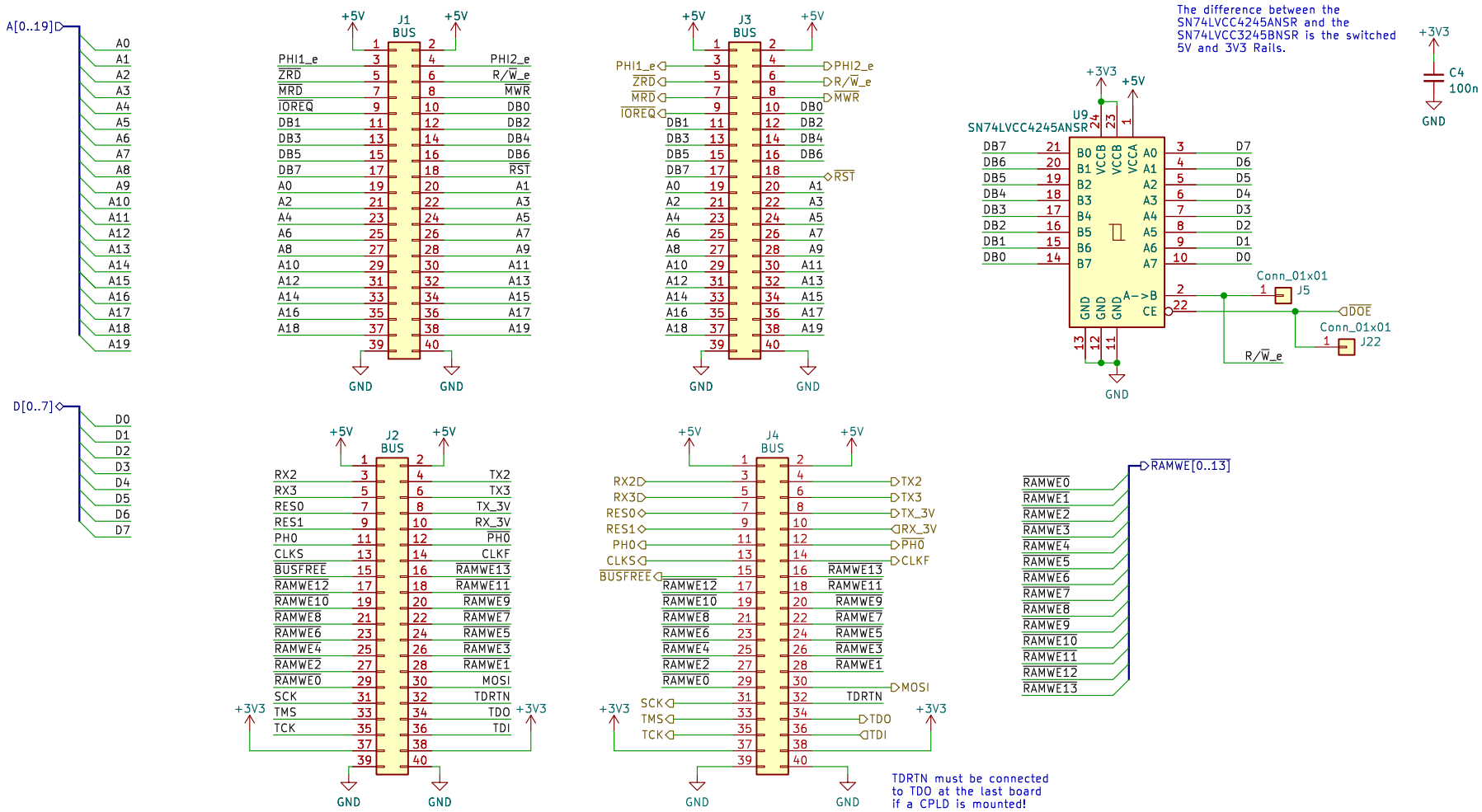

v1.1: $\overline{\text{DOE}}$ is now $\overline{\text{CS_ACIA}}$ and $\overline{\text{CS_ACIA2}}$

v1: Initial

100% Offner

Sheet: /Bus/

File: bus.kicad_sch

Title: Unicomp v2 – empty Board

Size: A4	Date: 2023-07-06	**Rev: v1.1.**
KiCad E.D.A. kicad 7.0.11-7.0.11~ubuntu20.04.1		Id: 4/3