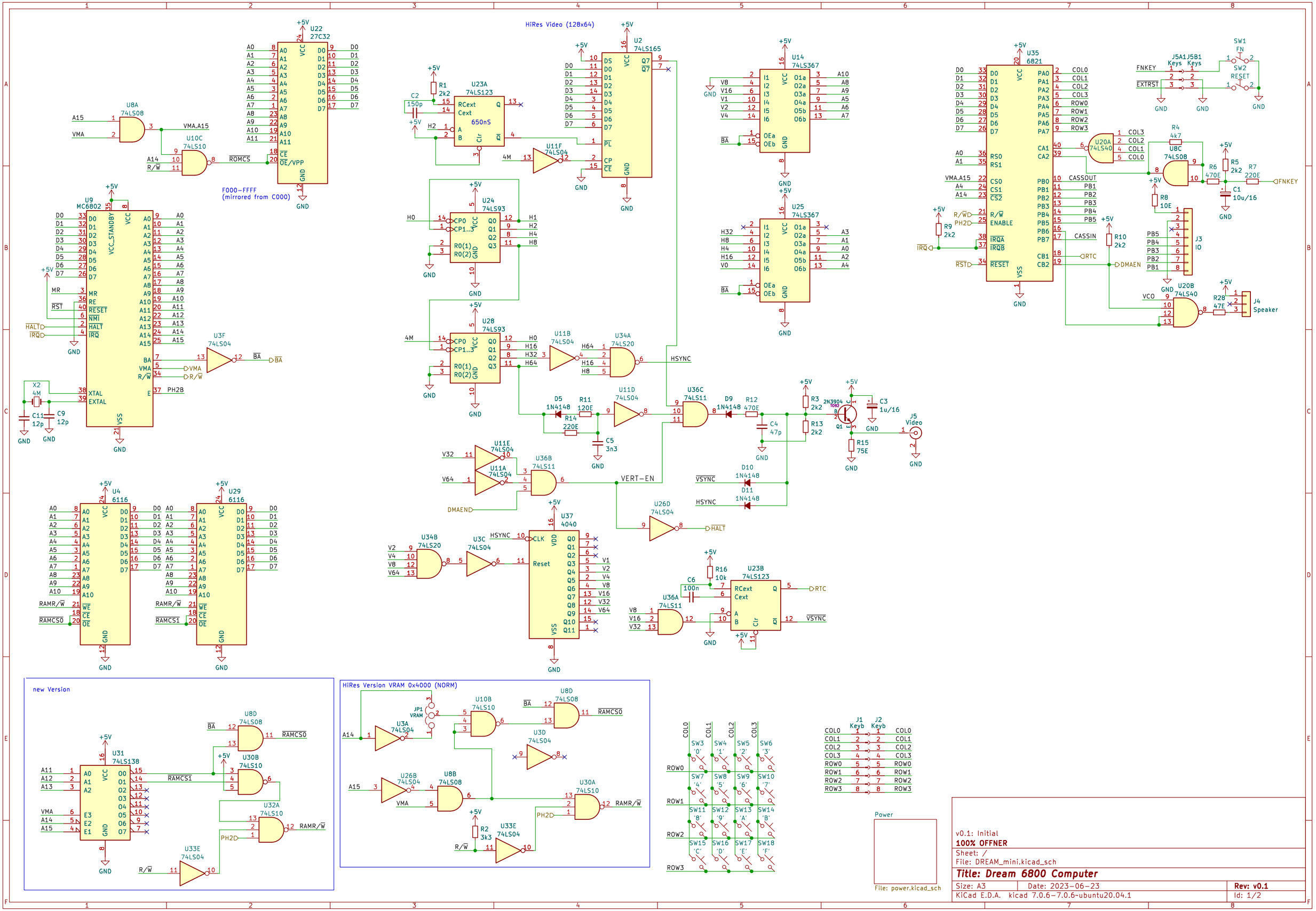

v0.1: Initial

100% OFFNER

Sheet: /

File: DREAM_mini.kicad_sch

Title: Dream 6800 Computer

Size: A3	Date: 2023-06-23	Rev: v0.1
KiCad E.D.A. kicad 7.0.6-7.0.6~ubuntu20.04.1		Id: 1/2

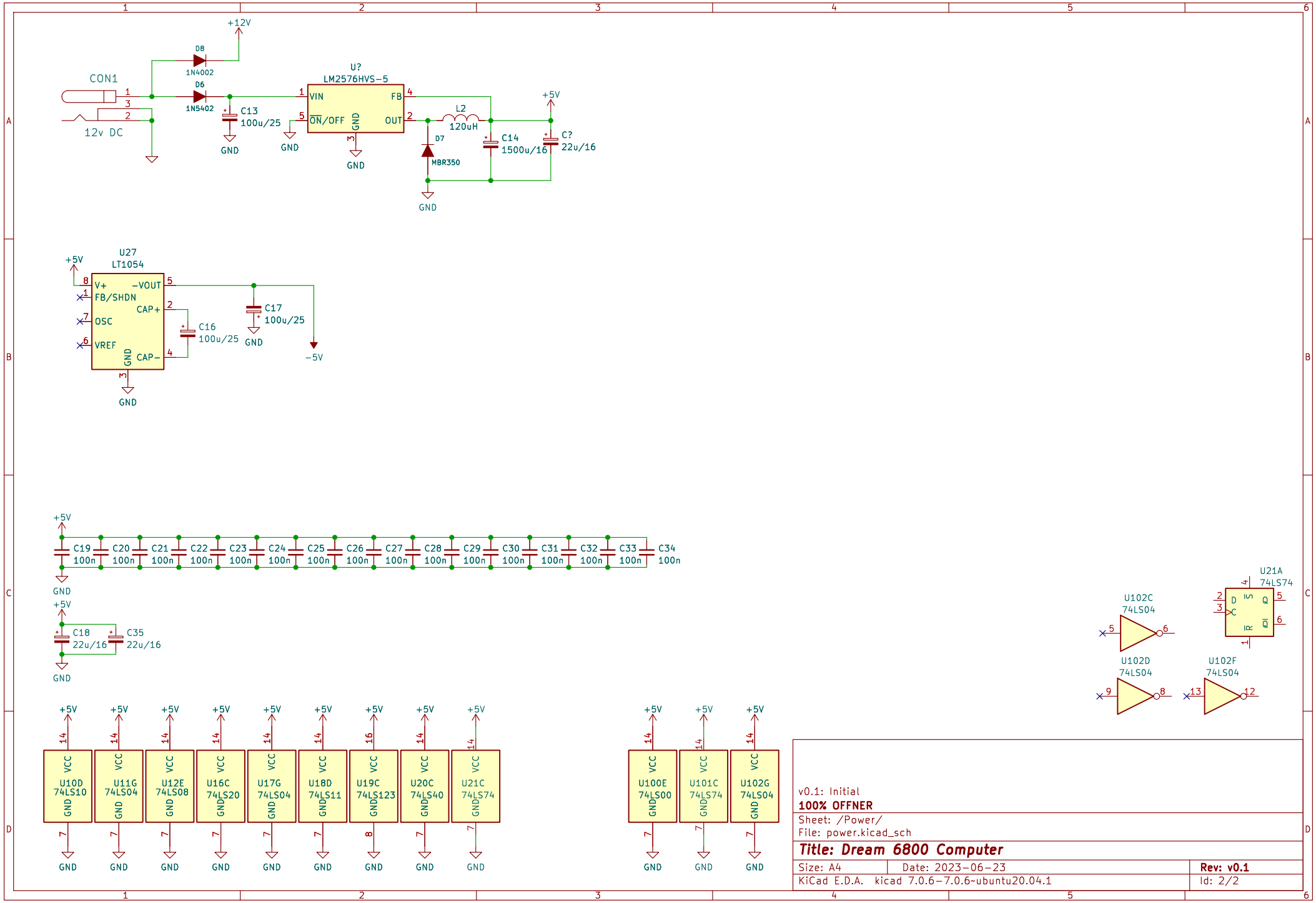
+12V
D8
1N4002
CON1
D6
1N5402
12v DC
C13
100u/25
GND
U?
LM2576HVS-5
VIN
ON/OFF
GND
FB
OUT
L2
120uH
D7
MBR350
C14
1500u/16
+5V
C?
22u/16
U27
LT1054
V+
FB/SHDN
OSC
VREF
GND
-VOUT
CAP+
CAP-
C16
100u/25
C17
100u/25
-5V
C19 100n
C20 100n
C21 100n
C22 100n
C23 100n
C24 100n
C25 100n
C26 100n
C27 100n
C28 100n
C29 100n
C30 100n
C31 100n
C32 100n
C33 100n
C34 100n
C18
22u/16
C35
22u/16
U102C
74LS04
U21A
74LS74
U102D
74LS04
U102F
74LS04
U10D
74LS10
U11G
74LS04
U12E
74LS08
U16C
74LS20
U17G
74LS04
U18D
74LS11
U19C
74LS123
U20C
74LS40
U21C
74LS74
U100E
74LS00
U101C
74LS74
U102G
74LS04
VCC
v0.1: Initial
100% OFFNER
Sheet: /Power/
File: power.kicad_sch
Title: Dream 6800 Computer
Size: A4
Date: 2023-06-23
Rev: v0.1
KiCad E.D.A. kicad 7.0.6-7.0.6~ubuntu20.04.1
Id: 2/2