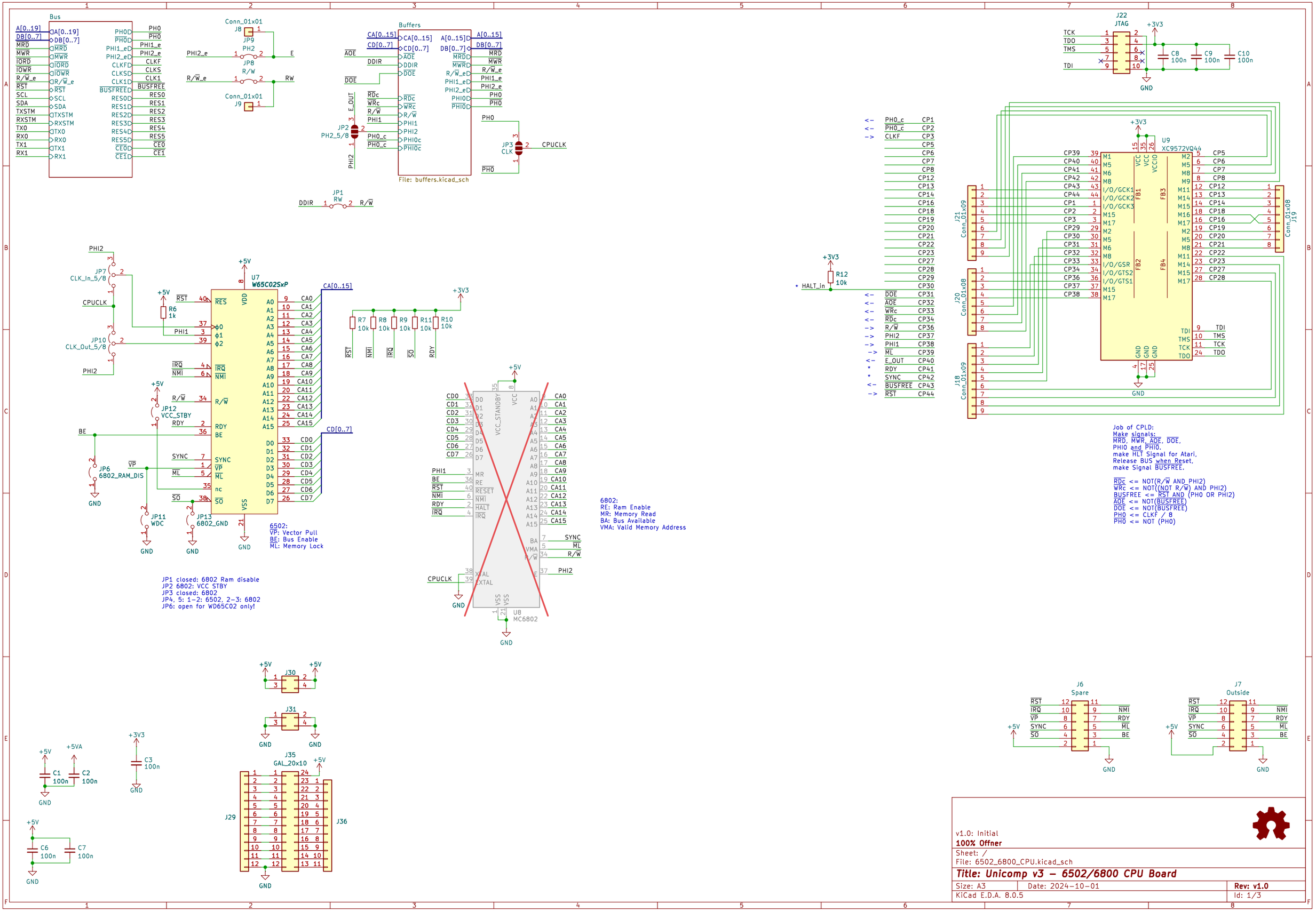

v1.0: Initial

100% Offner

Sheet: /

File: 6502_6800_CPU.kicad_sch

Title: Unicomp v3 – 6502/6800 CPU Board

Size: A3	Date: 2024-10-01	**Rev: v1.0**
KiCad E.D.A. 8.0.5		Id: 1/3

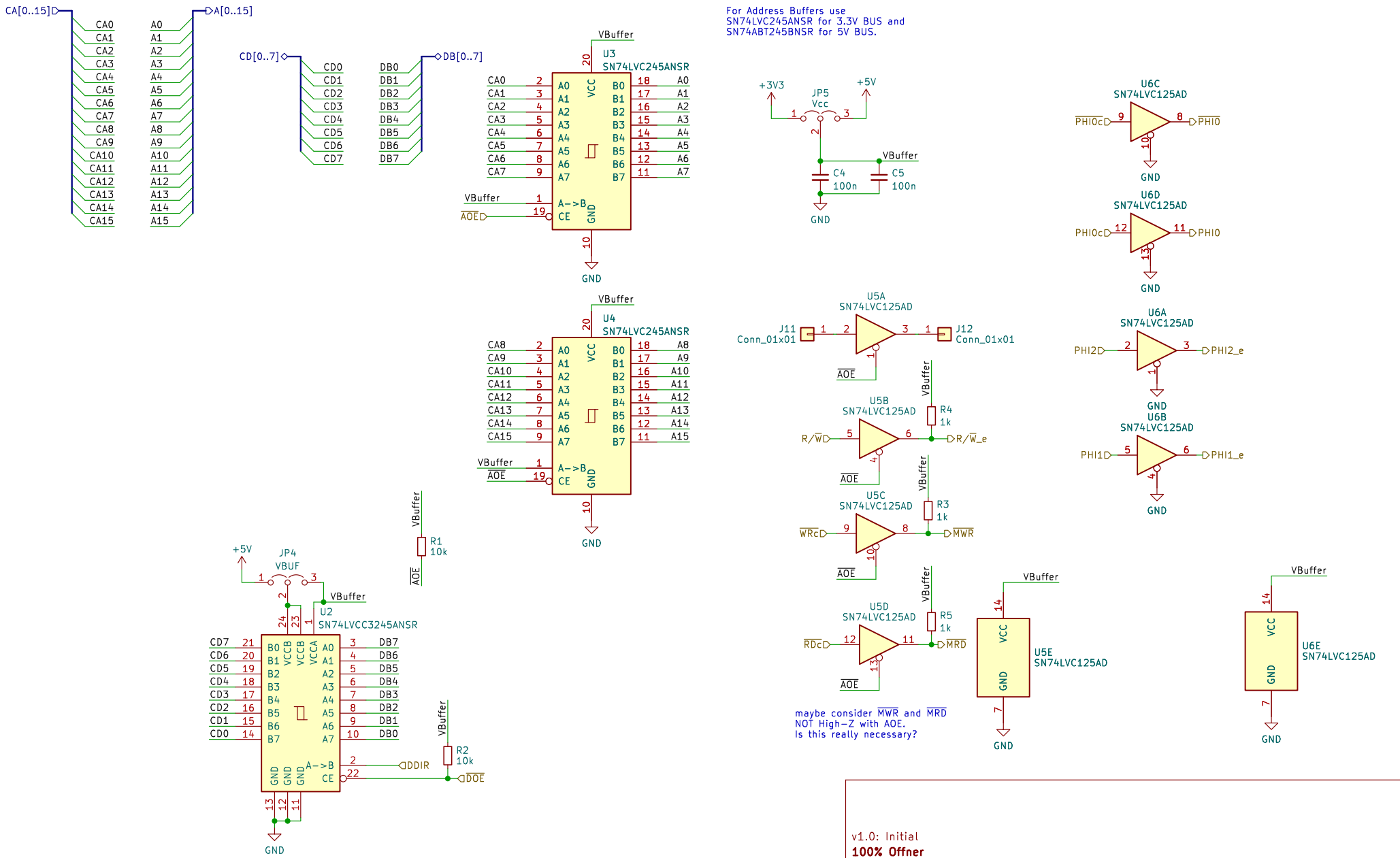

v1.0: Initial

100% Offner

Sheet: /Buffers/

File: buffers.kicad_sch

Title: Unicomp v3 – Buffers

Size: A4	Date: 2024-10-01	**Rev: v1.0**
KiCad E.D.A. 8.0.5		Id: 2/3

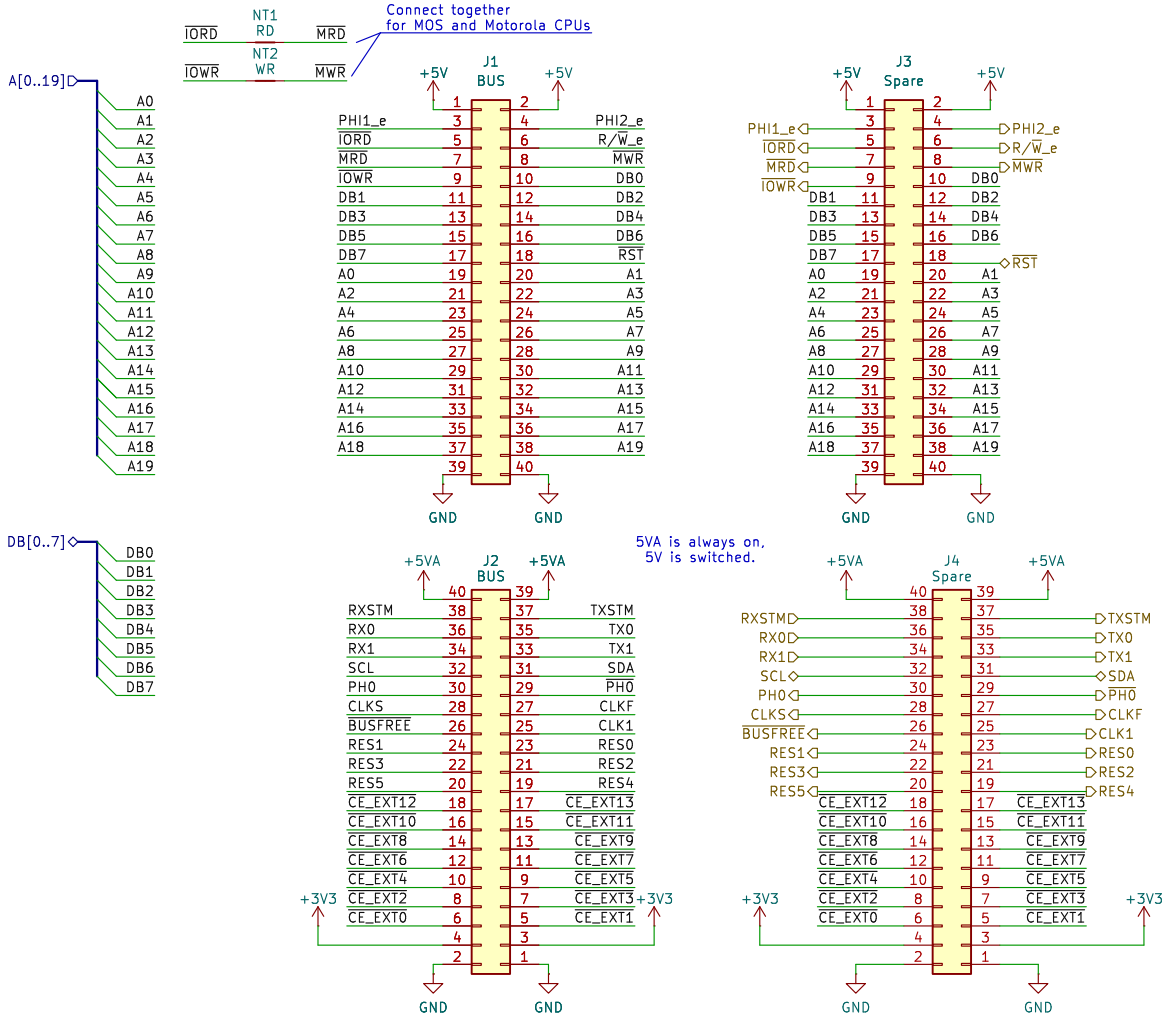

Graphics

- H5 Logo kicad
- H6 Logo Open Source Hardware

Mounting Holes M3

- H1 M3
- H2 M3
- H3 M3
- H4 M3

v1.0: Initial

100% Offner

Sheet: /Bus/

File: bus.kicad_sch

Title: Unicomp v3 – Bus

Size: A4	Date: 2024-10-01	**Rev: v1.0**
KiCad E.D.A. 8.0.5		Id: 4/3