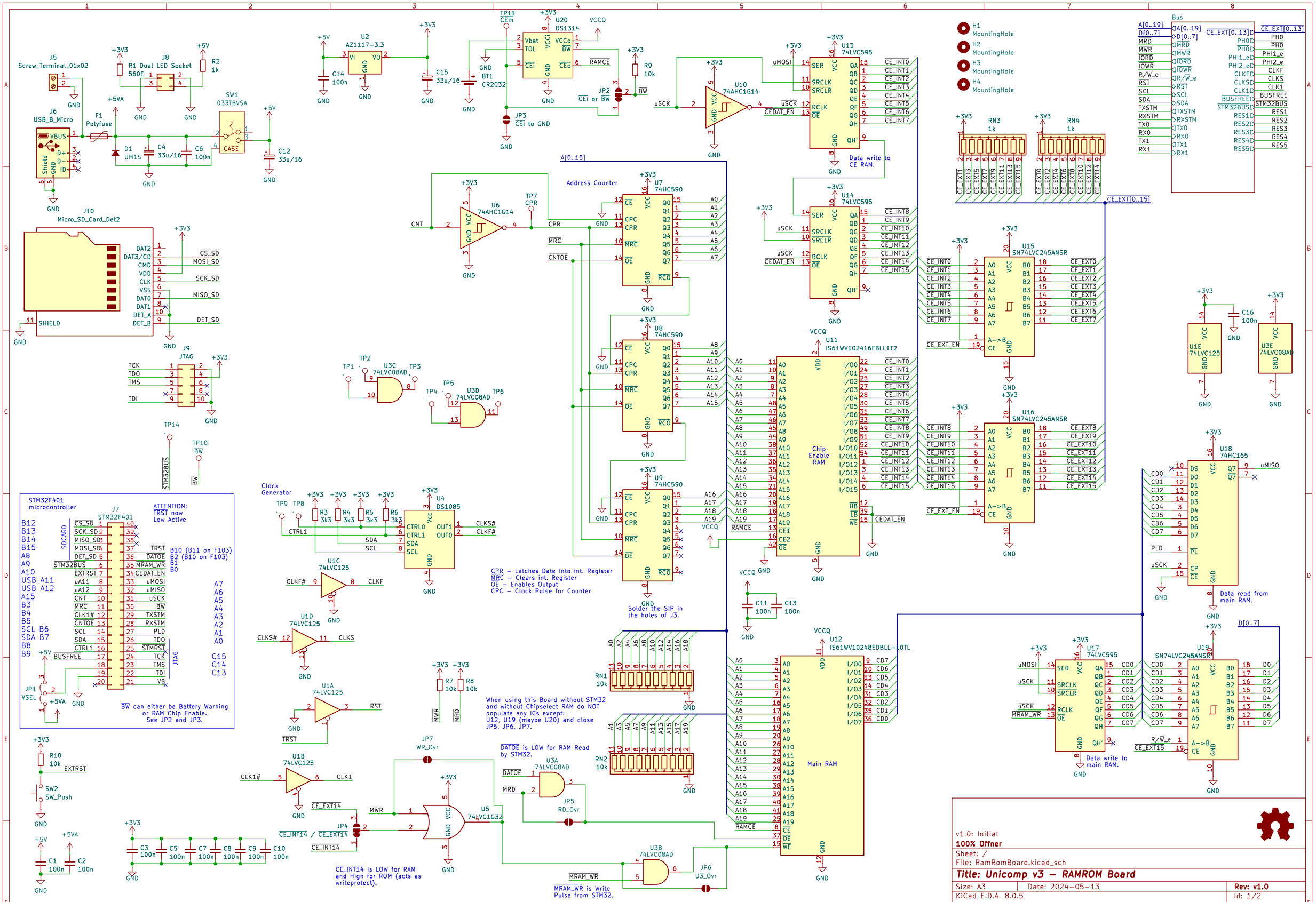
J5
Screw_Terminal_01x02
J6
USB_B_Micro
F1
Polyfuse
R1 Dual LED Socket
560E
J8
R2
1k
SW1
033TBVSA
CASE
D1
UM1S
C4
33u/16
C6
100n
C12
33u/16
U2
AZ1117-3.3
C14
100n
C15
33u/16
TP11
CEin
U20
DS1314
BT1
CR2032
JP3
CEi to GND
JP2
CEi or BW
R9
10k
RAMCE
U10
74AHC1G14
U13
74LVC595
Data write to
CE RAM.
U14
74LVC595
H1
MountingHole
H2
MountingHole
H3
MountingHole
H4
MountingHole
Bus
RN3
1k
RN4
1k
CE_EXT[0..15]
J10
Micro_SD_Card_Det2
SHIELD
J9
JTAG
TP14
STM32BUS
TP10
BW
U6
74AHC1G14
TP7
CPR
CNT
Address Counter
U7
74HC590
U8
74HC590
U9
74HC590
U3C
74LVC08AD
U3D
74LVC08AD
U11
IS61WV102416FBLL1T2
Chip
Enable
RAM
U15
SN74LVC245ANSR
U16
SN74LVC245ANSR
U1E
74LVC125
U3E
74LVC08AD
C16
100n
U18
74HC165
Data read from
main RAM.
STM32F401
microcontroller
J7
STM32F401
ATTENTION:
TRST now
Low Active
B10 (B11 on F103)
B2 (B10 on F103)
B1
B0
JP1
VSEL
BW can either be Battery Warning
or RAM Chip Enable.
See JP2 and JP3.
Clock
Generator
U4
DS1085
U1C
74LVC125
U1D
74LVC125
U1A
74LVC125
U1B
74LVC125
R3
3k3
R4
3k3
R5
3k3
R6
3k3
CLKS#
CLKF#
CLKS
CLKF
CLK1#
CLK1
RST
TRST
CPR – Latches Date into int. Register
MRC – Clears int. Register
OE – Enables Output
CPC – Clock Pulse for Counter
Solder the SIP in
the holes of J3.
RN1
10k
RN2
10k
R7
10k
R8
10k
MWR
MRD
When using this Board without STM32
and without Chipselect RAM do NOT
populate any ICs except:
U12, U19 (maybe U20) and close
JP5, JP6, JP7.
DATOE is LOW for RAM Read
by STM32.
U3A
74LVC08AD
JP5
RD_Ovr
JP7
WR_Ovr
U5
74LVC1G32
JP4
CE_INT14 / CE_EXT14
CE_INT14
CE_INT14 is LOW for RAM
and High for ROM (acts as
writeprotect).
U3B
74LVC08AD
JP6
U3_Ovr
MRAM_WR
MRAM_WR is Write
Pulse from STM32.
U12
IS61WV10248EDBLL-10TL
Main RAM
U17
74LVC595
U19
SN74LVC245ANSR
Data write to
main RAM.
D[0..7]
R10
10k
EXTRST
SW2
SW_Push
C1
100n
C2
100n
C3
100n
C5
100n
C7
100n
C8
100n
C9
100n
C10
100n
C11
100n
C13
100n
v1.0: Initial
100% Offner
Sheet: /
File: RamRomBoard.kicad_sch
Title: Unicomp v3 – RAMROM Board
Size: A3
Date: 2024-05-13
Rev: v1.0
KiCad E.D.A. 8.0.5
Id: 1/2

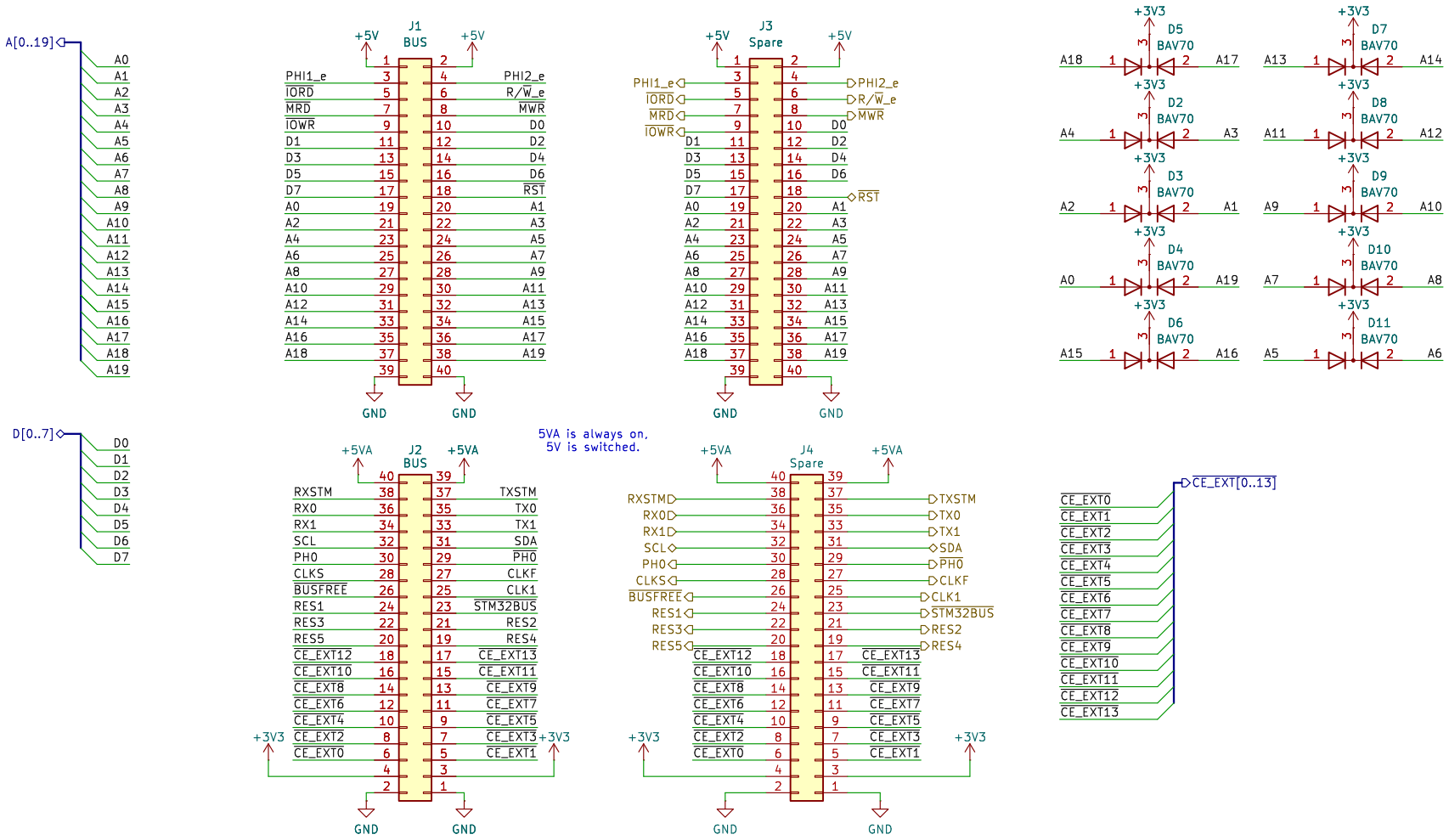

v1.0: Initial

100% Offner

Sheet: /Bus/

File: bus.kicad_sch

Title: Unicomp v3 – RAMROM Board

Size: A4	Date: 2024-05-13	**Rev: v1.0**
KiCad E.D.A. 8.0.5		Id: 4/2