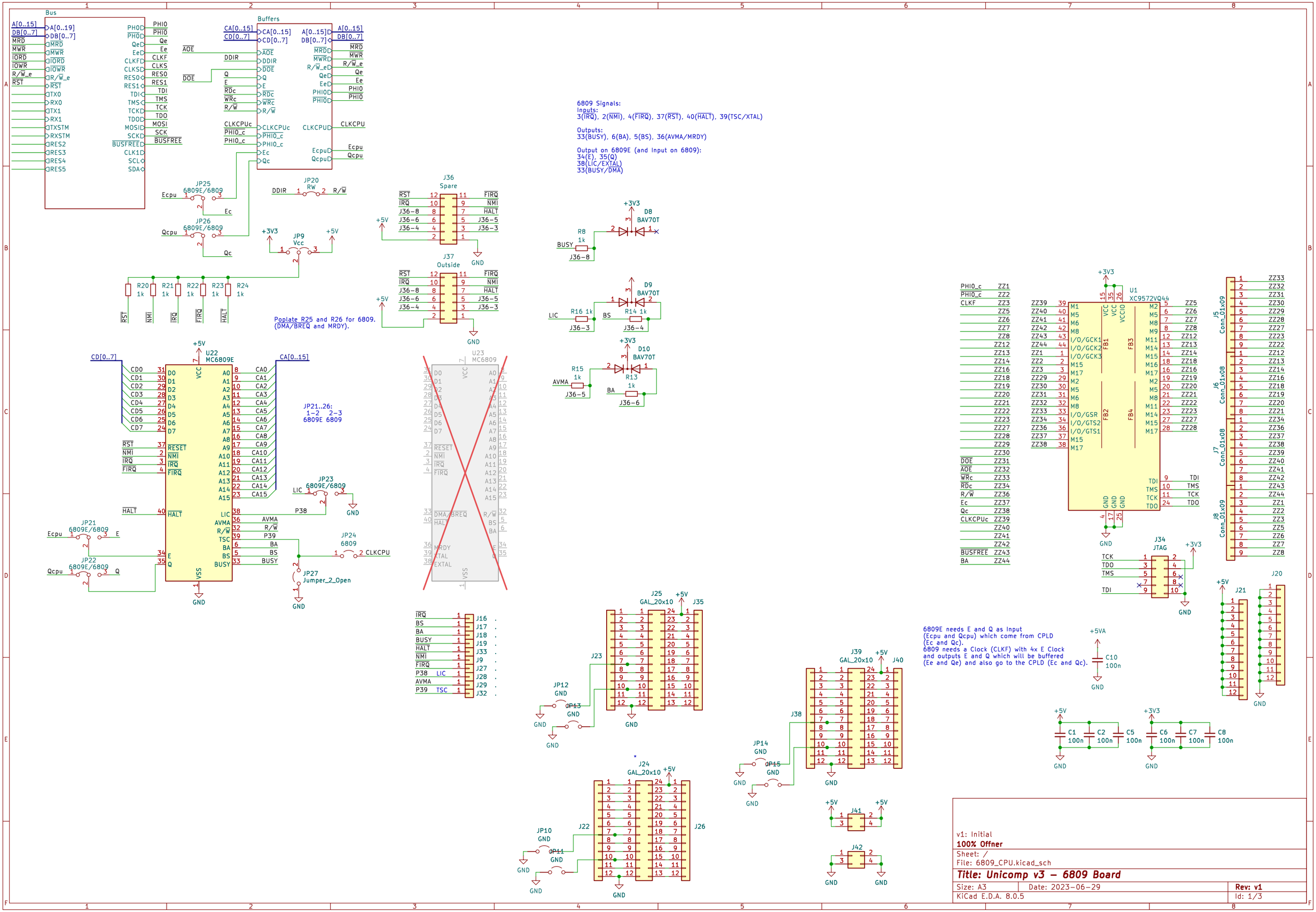

v1: Initial

100% Offner

Sheet: /

File: 6809_CPU.kicad_sch

Title: Unicomp v3 – 6809 Board

Size: A3	Date: 2023-06-29	**Rev: v1**
KiCad E.D.A. 8.0.5		Id: 1/3

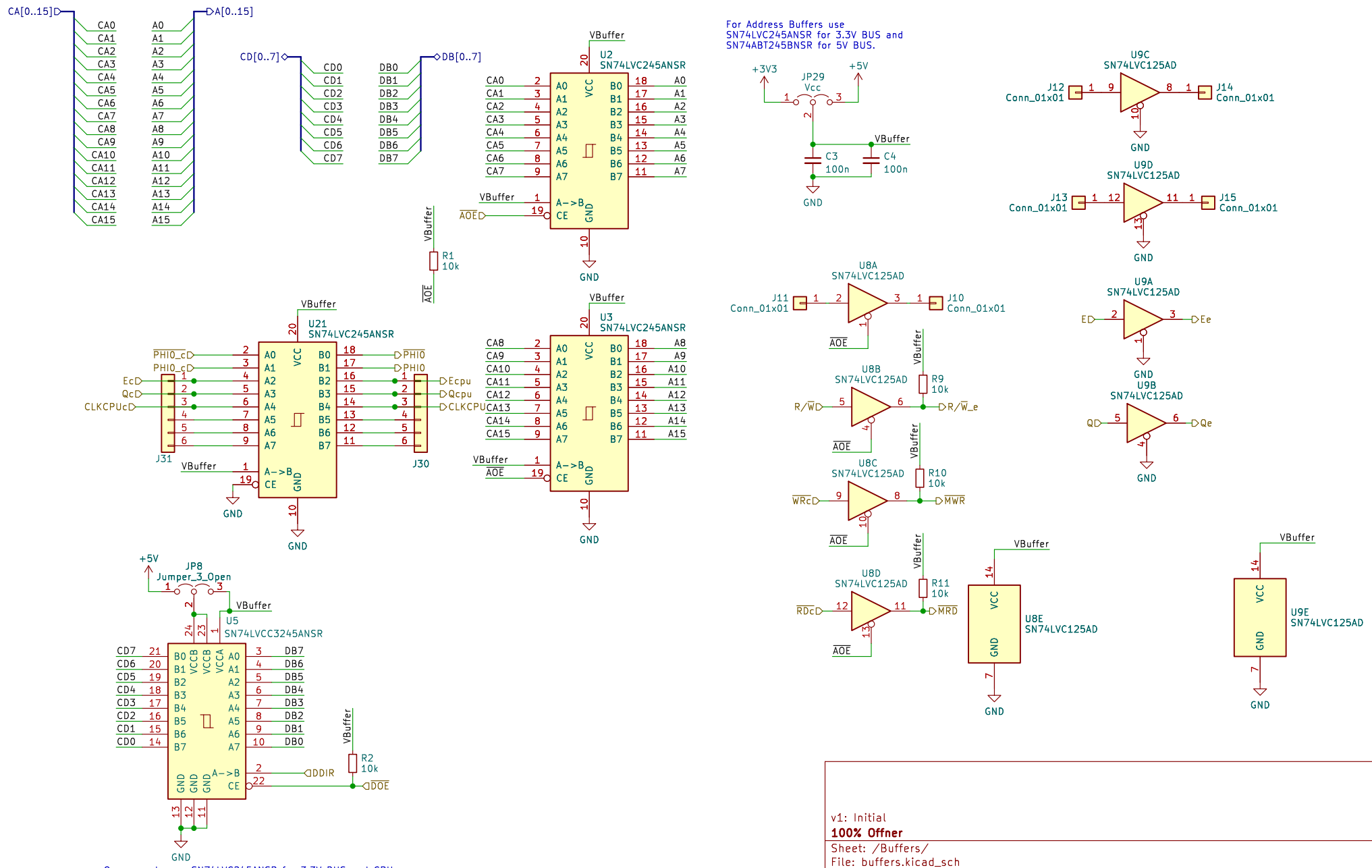

v1: Initial

100% Offner

Sheet: /Buffers/

File: buffers.kicad_sch

Title:

Size: A4	Date: 2023-06-29	**Rev: v1**
KiCad E.D.A. 8.0.5		Id: 3/3

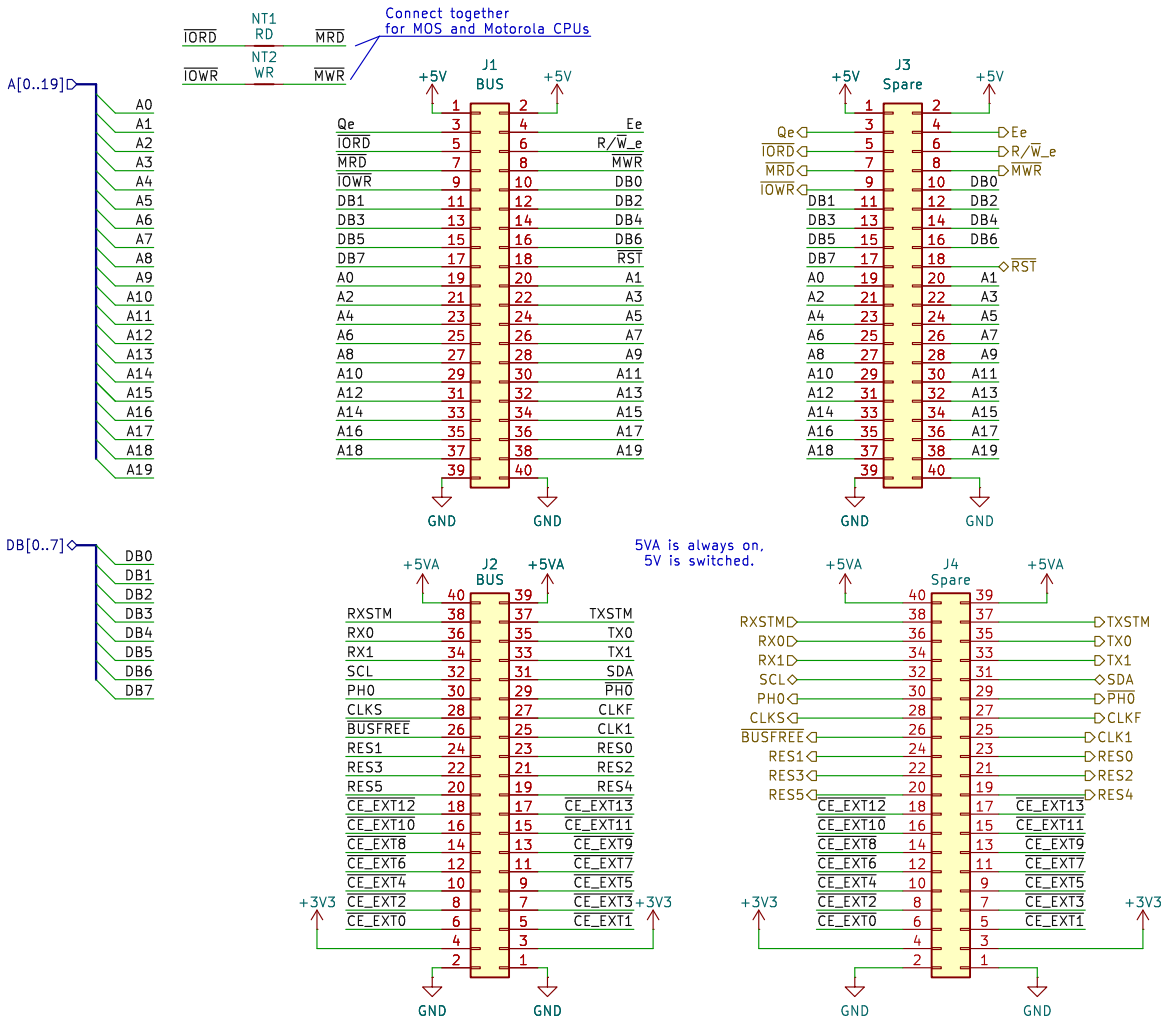

Graphics

- H12 Logo kicad
- H8 Logo 100%
- H13 Logo Open Source Hardware

Mounting Holes M3

- H1 M3
- H2 M3
- H3 M3
- H4 M3

v1: Initial

100% Offner

Sheet: /Bus/

File: bus.kicad_sch

Title:

Size: A4	Date: 2023-06-29	**Rev: v1**
KiCad E.D.A. 8.0.5		Id: 4/3