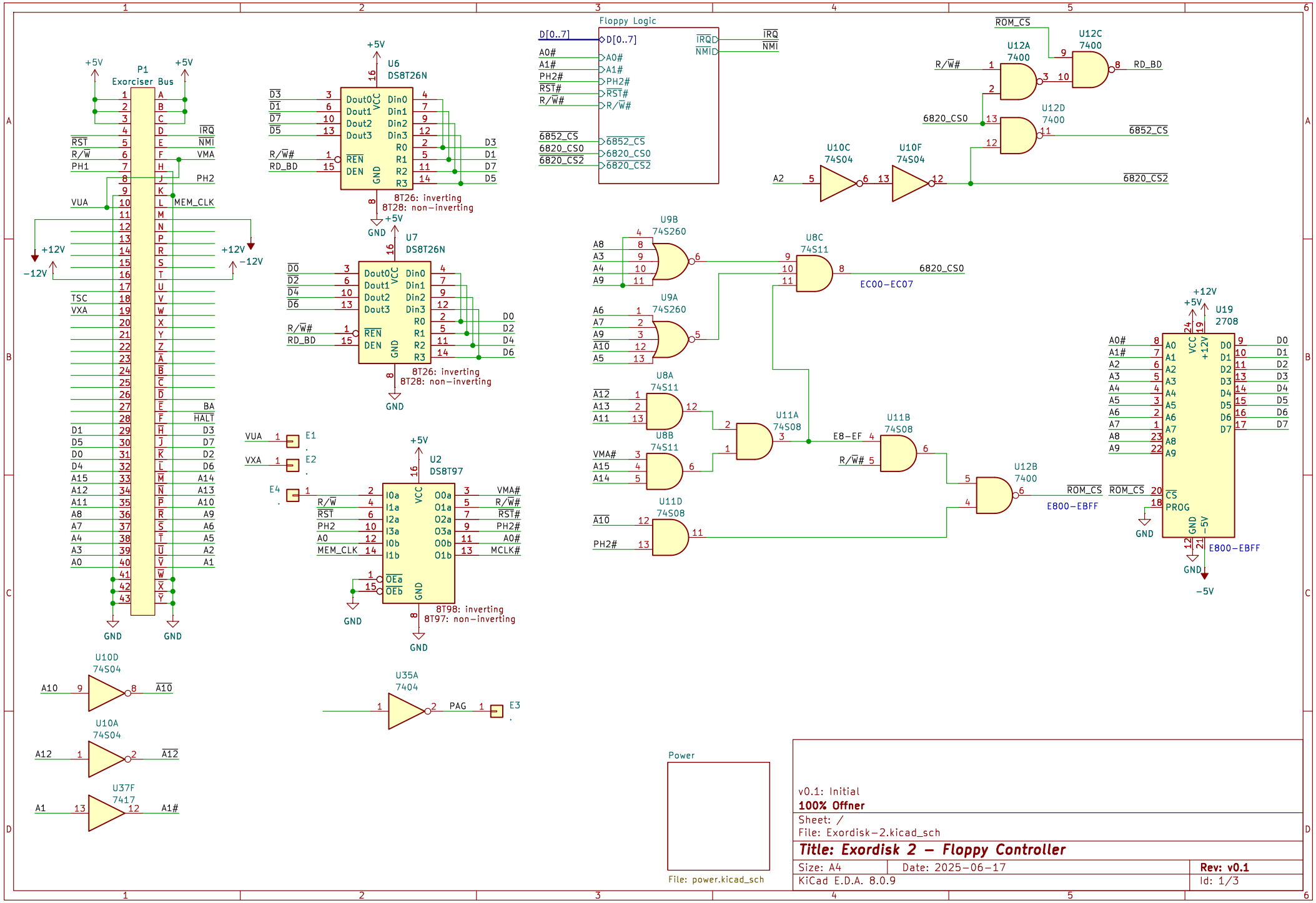
P1
Exorciser Bus
+5V
+12V
-12V
GND
IRQ
NMI
VMA
PH2
MEM_CLK
BA
HALT
D3
D7
D2
D6
A14
A13
A10
A9
A6
A5
A2
A1
RST
R/W
PH1
VUA
TSC
VXA
D1
D5
D0
D4
A15
A12
A11
A8
A7
A4
A3
A0
U6
DS8T26N
Dout0
Dout1
Dout2
Dout3
Din0
Din1
Din2
Din3
R0
R1
R2
R3
REN
DEN
VCC
8T26: inverting
8T28: non-inverting
U7
DS8T26N
D0
D2
D4
D6
U2
DS8T97
I0a
I1a
I2a
I3a
I0b
I1b
O0a
O1a
O2a
O3a
O0b
O1b
OEa
OEb
VMA#
R/W#
RST#
PH2#
A0#
MCLK#
E1
E2
E4
8T98: inverting
8T97: non-inverting
U35A
7404
PAG
E3
U10D
74S04
A10
U10A
74S04
A12
U37F
7417
A1
A1#
Floppy Logic
D[0..7]
A0#
A1#
PH2#
RST#
R/W#
6852_CS
6820_CS0
6820_CS2
IRQ
NMI
U12A
7400
U12C
7400
U12D
7400
RD_BD
ROM_CS
U10C
74S04
U10F
74S04
A2
U9B
74S260
U9A
74S260
U8C
74S11
EC00-EC07
U8A
74S11
U8B
74S11
U11A
74S08
U11B
74S08
U11D
74S08
E8-EF
E800-EBFF
U12B
7400
U19
2708
CS
PROG
Power
File: power.kicad_sch
v0.1: Initial
100% Offner
Sheet: /
File: Exordisk-2.kicad_sch
Title: Exordisk 2 - Floppy Controller
Size: A4
Date: 2025-06-17
Rev: v0.1
KiCad E.D.A. 8.0.9
Id: 1/3

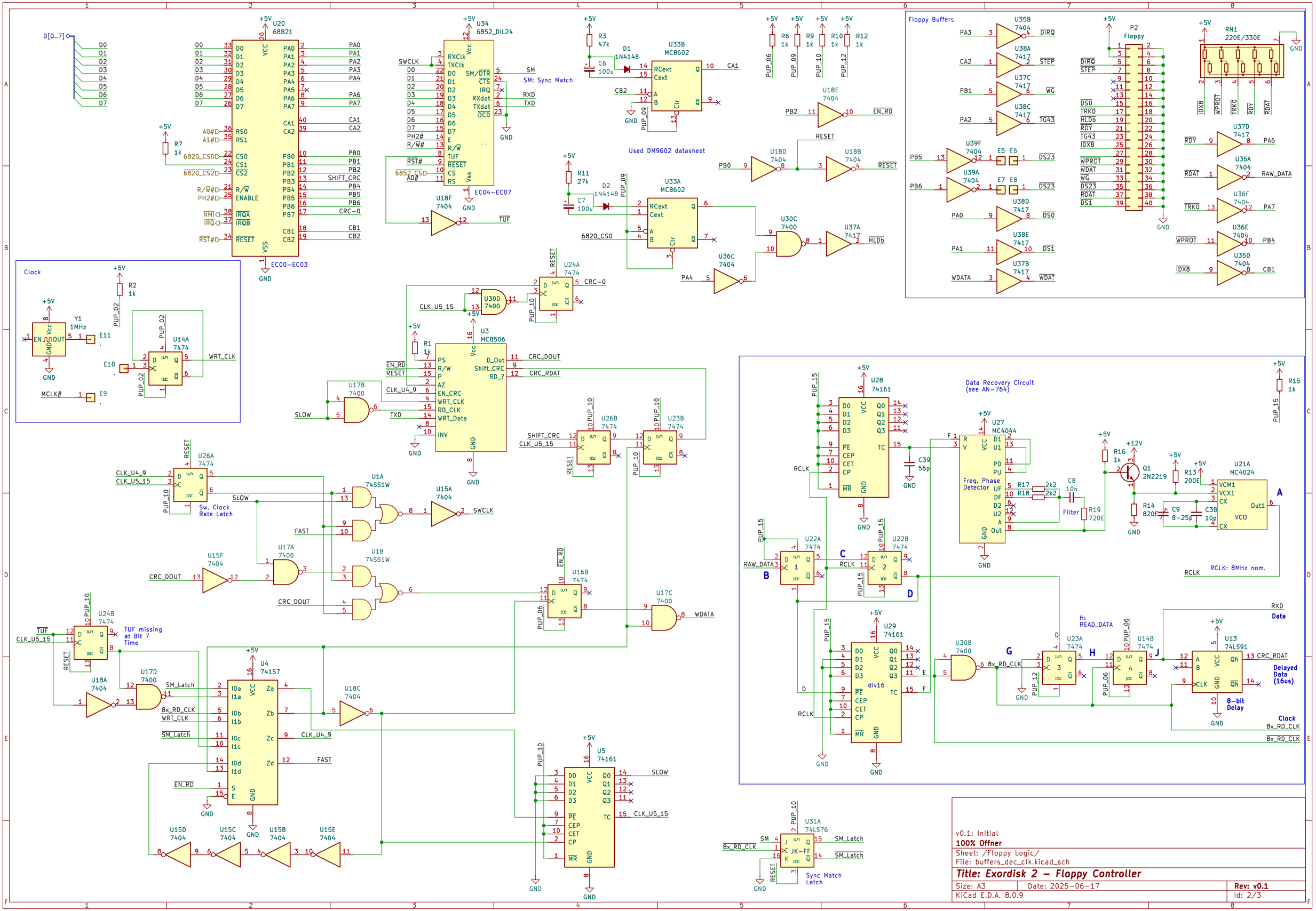
Floppy Buffers
Clock
Data Recovery Circuit
(see AN-764)
Used DM9602 datasheet
Sw. Clock
Rate Latch
TUF missing
at Bit 7
Time
SM: Sync Match
Sync Match
Latch
Filter
RCLK: 8MHz nom.
H:
READ_DATA
Delayed
Data
(16us)
8-bit
Delay
Clock
Data
v0.1: Initial
100% Offner
Sheet: /Floppy Logic/
File: buffers_dec_clk.kicad_sch
Title: Exordisk 2 – Floppy Controller
Size: A3
Date: 2025-06-17
Rev: v0.1
KiCad E.D.A. 8.0.9
Id: 2/3

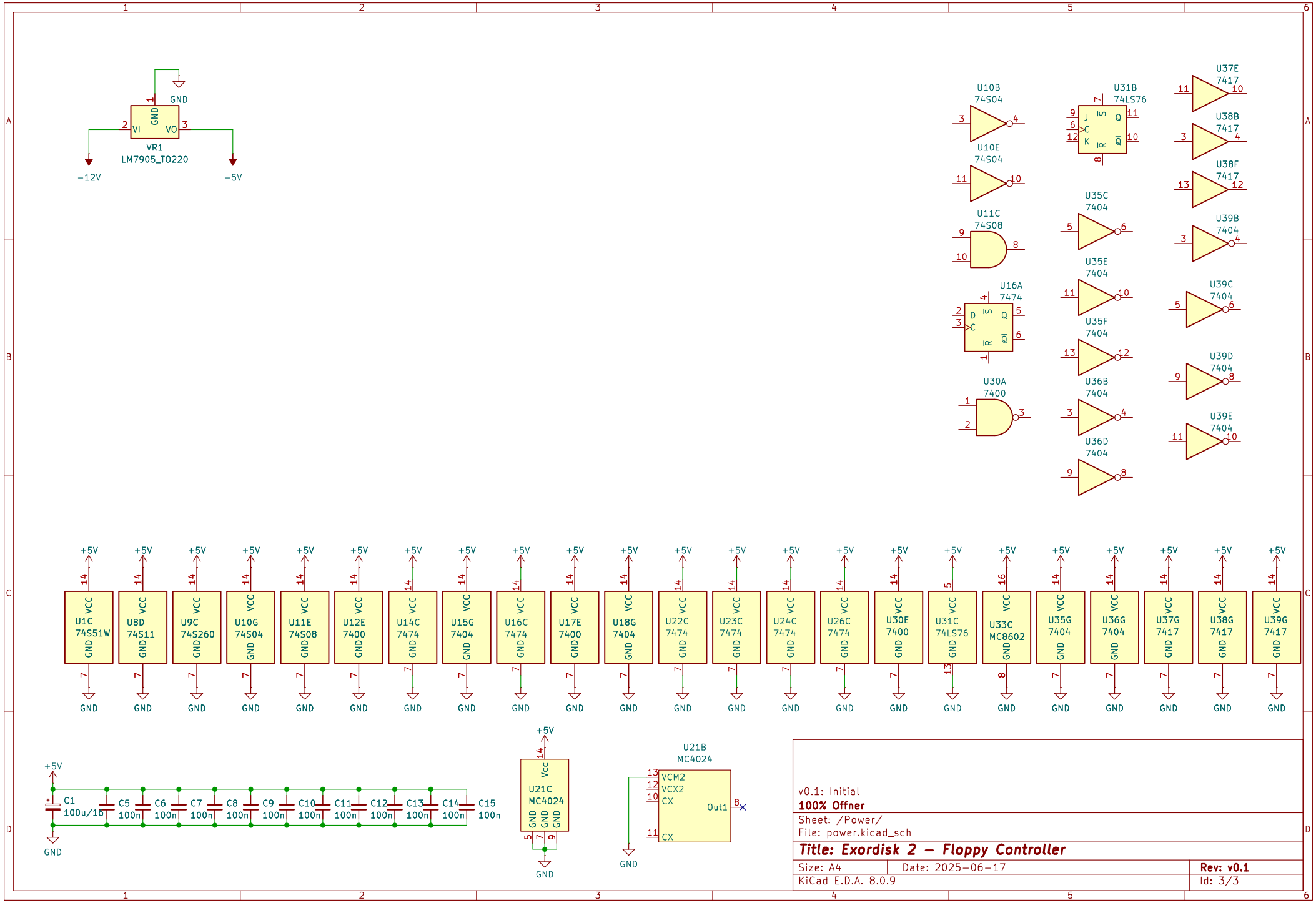

v0.1: Initial

100% Offner

Sheet: /Power/

File: power.kicad_sch

Title: Exordisk 2 – Floppy Controller

Size: A4	Date: 2025-06-17	**Rev: v0.1**
KiCad E.D.A. 8.0.9		Id: 3/3