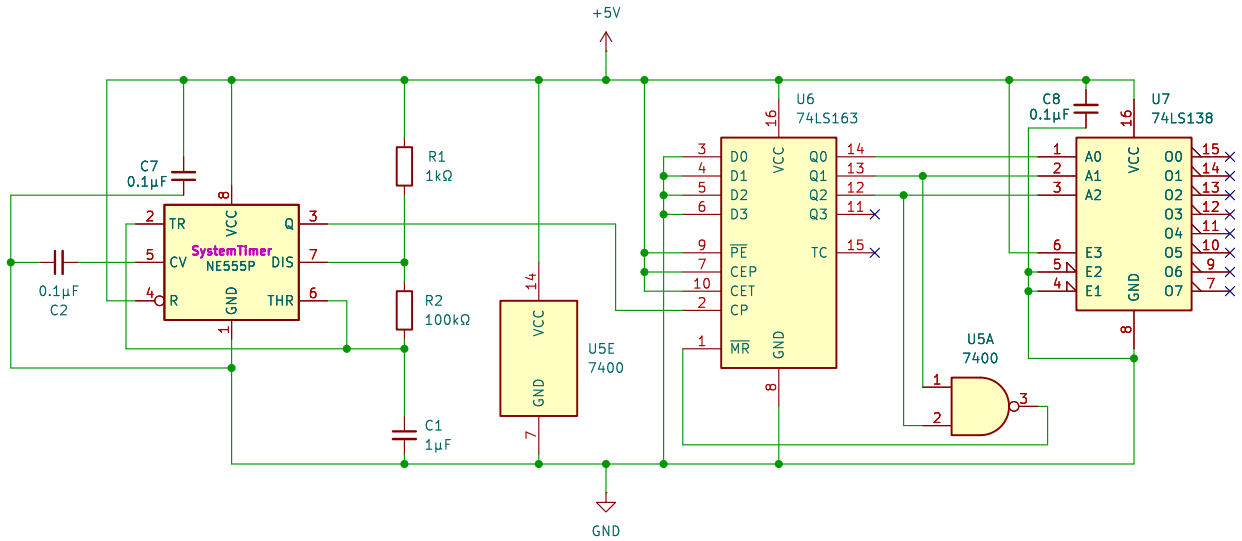

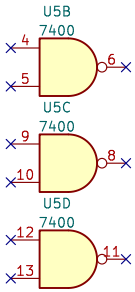

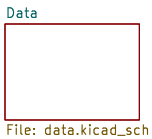

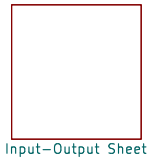

An 8-bit logic sequencer connected to an LED bus.
Utilizes a 555 timer and binary counter to increment addressing.

Control Unit

Sheet: /
File: dino_v0_0_2.kicad_sch

Title: Dino v0.0.2

Size: USLetter	Date: 2025-07-19	**Rev: v1.0.4**
KiCad E.D.A. 9.0.1		Id: 1/3

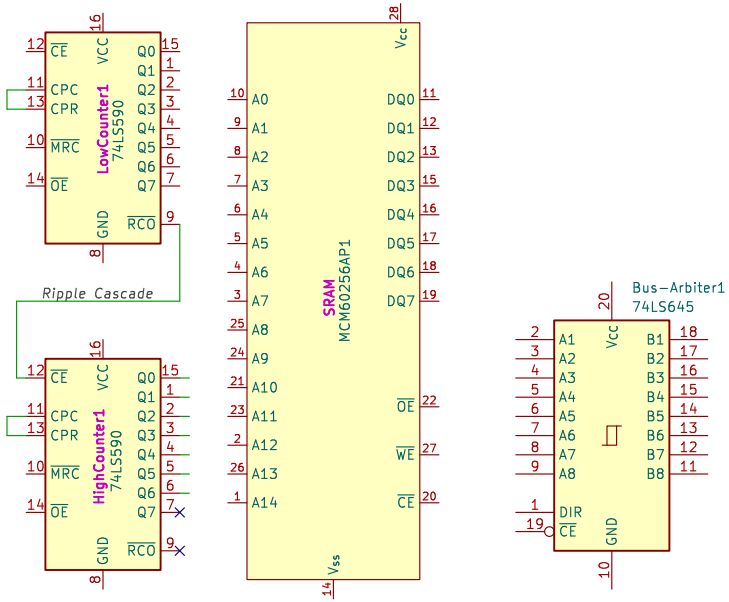

An 8-bit logic sequencer connected to an LED bus.
Utilizes a 555 timer and binary counter to increment addressing.

Data

Sheet: /Data/
File: data.kicad_sch

Title: Dino v0.0.2

Size: USLetter	Date: 2025-07-19	**Rev: v1.0.4**
KiCad E.D.A. 9.0.1		Id: 2/3

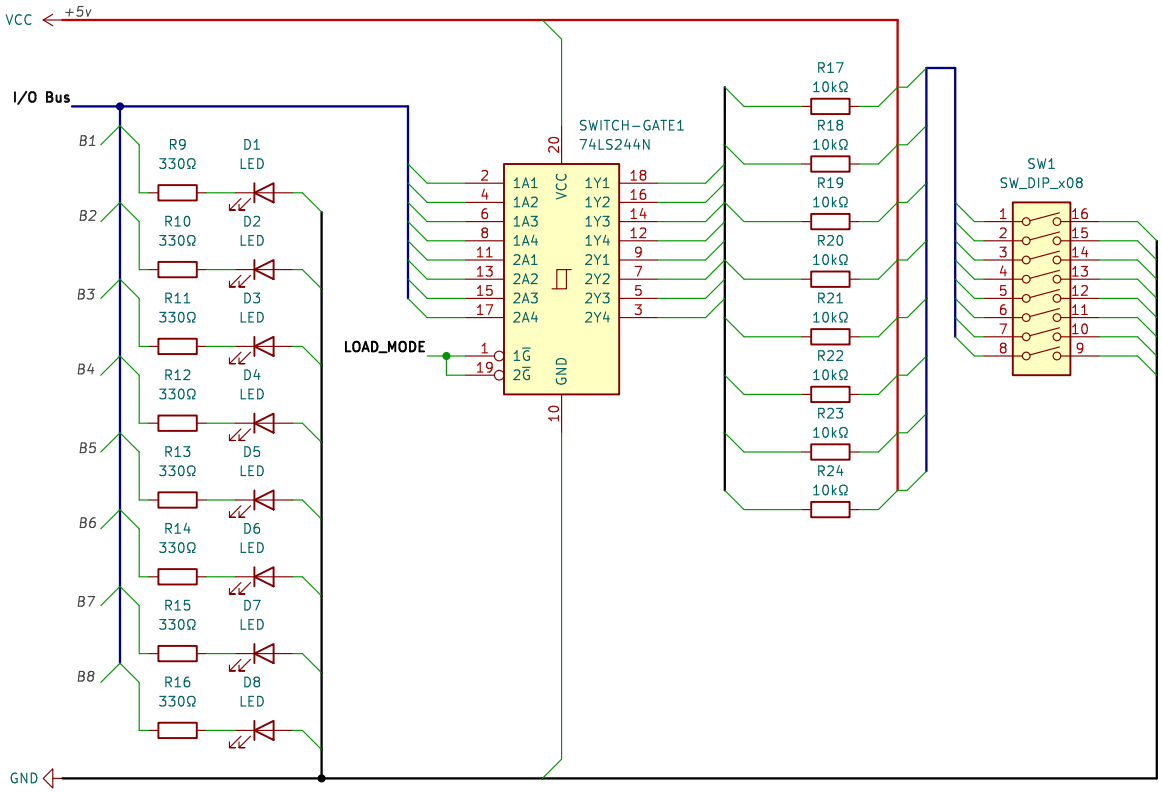

An 8-bit logic sequencer connected to an LED bus.
Utilizes a 555 timer and binary counter to increment addressing.

Input Output Components

Sheet: /Input-Output Sheet/
File: input_output.kicad_sch

Title: Dino v0.0.2

Size: USLetter	Date: 2025-07-19	Rev: v1.0.4
KiCad E.D.A. 9.0.1		Id: 3/3