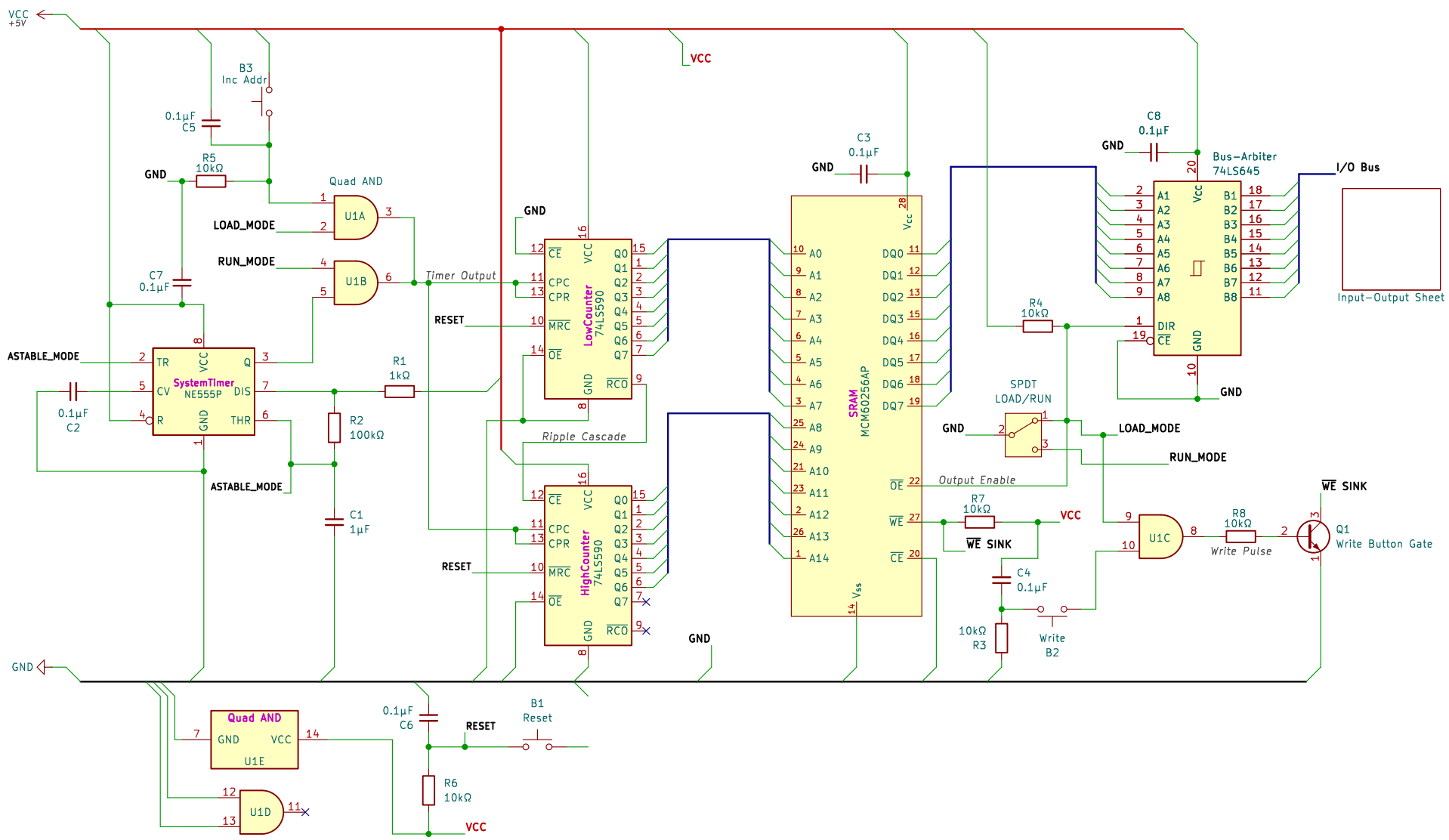

An 8-bit logic sequencer connected to an LED bus.
Utilizes a 555 timer and binary counter to increment addressing.

Core Components

Sheet: /
File: dino_v0_0_1.kicad_sch

Title: Dino v0.0.1

Size: USLetter	Date: 2025-06-30	Rev: v1.0.2
KiCad E.D.A. 9.0.1		Id: 1/2

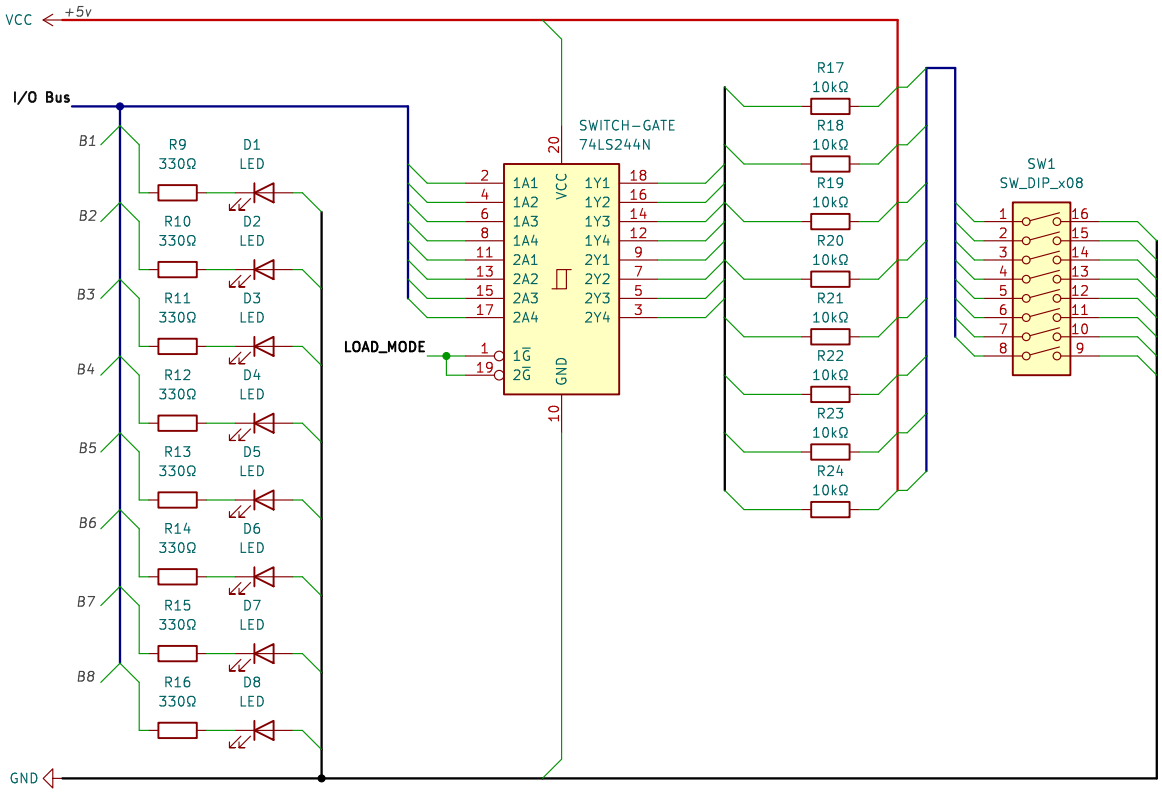

An 8-bit logic sequencer connected to an LED bus.
Utilizes a 555 timer and binary counter to increment addressing.

Input Output Components

Sheet: /Input-Output Sheet/
File: input_output.kicad_sch

Title: Dino v0.0.1

Size: USLetter	Date: 2025-06-30	**Rev: v1.0.2**
KiCad E.D.A. 9.0.1		Id: 2/2